SHEET INDEX

CONTENTS	SHEET NO. PRIOR TO ISSUE 5A	SHEET NO. CURRENT ISSUE	SHEET ISSUE NO.
SHEET INDEX SUPPORTING INFORMATION OPTION INDEX USED ON TABLE	A1	A1	8
SHEET NUMBER CANCELED ON DWG ISS 4D	A#1		
DESIGNATION MNEMONICS INDEX	A#2	A2	5
APPARATUS INDEX	A#3	A3	5
APPARATUS INDEX (CONT) LEAD INDEX	A#4	A4	5
LEAD INDEX (CONT)	A#5	A5	5
	A#6	A6	5
C	A#7		
FS 1 DATA AND CONTROL - SERVICE GROUP 0	B#1AA	B1AA	5
	B#1CA	B1CA	5
	D#1C3	B1CB	5
FS 2 EXTERNAL CONNECTIONS - SERVICE GROUP 0	B#2AA	B2AA	7
	B#2AB	B2AB	7
	B#2AC	B2AC	7
		B2AD	7
	B#2CA	B2CA	7
	B#2CB	B2CB	7
	B#2CC	B2CC	7
	B#2CD	B2CD	7
	B#2CE	B2CE	7
	B#2CF	B2CF	7
	B#2CG	B2CG	7
	B#2CH	B2CH	7
	B#2CJ	B2CJ	7
C	B#2CK		
	B#2CL		
	B#2CM		
	B#2CN		
	B#2CP		
	B#2CR		
	B#2CT		
	B#2CU		
FS 3 METALLIC TEST INTERCONNECTION BUS - SERVICE GROUP 0	B#3AA	B3AA	5
	B#3CA	B3CA	5
C - CANCELED SHEETS			

CONTENTS	SHEET NO. PRIOR TO ISSUE 5A	SHEET NO. CURRENT ISSUE	SHEET ISSUE NO.
FS 4 POWER - SERVICE GROUP 0	B#4AA	B4AA	5
	B#4CA	B4CA	8
FS 5 DATA AND CONTROL - SERVICE GROUP 1	B#5AA	B5AA	5
	B#5CA	B5CA	8
	B#5CB	B5CB	8
FS 6 EXTERNAL CONNECTIONS - SERVICE GROUP 1	B#6AA	B6AA	7
	B#6AB	B6AB	7
	B#6AC	B6AC	7
		B6AD	7
	B#6CA	B6CA	7
	B#6CB	B6CB	7
	B#6CC	B6CC	7
	B#6CD	B6CD	7
	B#6CE	B6CE	7
	B#6CF	B6CF	7
	B#6CG	B6CG	7
	B#6CH	B6CH	7
	B#6CJ	B6CJ	7
C	B#6CK		
	B#6CL		
	B#6CM		
	B#6CN		
	B#6CP		
	B#6CR		
	B#6CT		
	B#6CU		
FS 7 METALLIC TEST INTERCONNECTION BUS - SERVICE GROUP 1	B#7AA	B7AA	5
	B#7CA	B7CA	5
C - CANCELED SHEETS			

CONTENTS	SHEET NO. PRIOR TO ISSUE 5A	SHEET NO. CURRENT ISSUE	SHEET ISSUE NO.
FS 8 POWER - SERVICE GROUP 1	B#8AA	B8AA	5
	B#8CA	B8CA	8
FS 9 MTB 15 DIODE RESISTOR NETWORK		B9AA	6
APP FIG. 1,3-2	C#1	C1	7
APP FIG. 2	C#2	C2	5
C	C#3		
	C#4		
	C#5		
	C#6		
CIRCUIT NOTES	D1	D1	3
	D2	D2	4
CIRCUIT NOTES (CONT) EQUIPMENT NOTES	D3	D3	6
INFORMATION NOTES	D#1	D4	8
		D5	5
		D6	5
		D7	7
		D8	8
CAD NOTES	GB1	GB1	1
CAD 001 UNIT SYMBOL	GB2	GB2	3
	GB3	GB3	3
	GB4	GB4	3
	GB5	GB5	3
	GB6	GB6	3
	GB7	GB7	3
	GB8	GB8	3
CAD 002,P/O CAD 003	GB9	GB9	2
P/O CAD 003	GB10	GB10	2
	GB11	GB11	2
	GB12	GB12	2
	GB13	GB13	2
	GB14	GB14	6
P/O CAD 004	GB15	GB15	2
P/O CAD 004,P/O CAD 005	GB16	GB16	2
P/O CAD 005	GB17	GB17	6
	GB18	GB18	6
	GB19	GB19	2
	GB20	GB20	2
	GB21	GB21	2
	GB22	GB22	2
	GB23	GB23	2
P/O CAD 005,P/O CAD 006	GB24	GB24	2
P/O CAD 006,CAD 007,008	GB25	GB25	2
CAD 009		GB26	8
C - CANCELED SHEETS			

OPTION INDEX

APP OR WRG	RATED ON ISSUE	REF NOTES	LOCATION
3	1	312	APP FIG. 3
4	1	312	APP FIG. 4
5	1	312	APP FIG. 5
6	1	312	APP FIG. 6
7	1	312	APP FIG. 7
8	1	312	APP FIG. 8
9	1	312	APP FIG. 9
10	2D	312	APP FIG. 10
11	5A	312	APP FIG. 11
12	5A	312	APP FIG. 12
13	5A	312	APP FIG. 13
14	5A	312	APP FIG. 14
15	5A	312	APP FIG. 15
16	5A	312	APP FIG. 16
17	5A	312	APP FIG. 17
18	5A	312	APP FIG. 18
19	5A	312	APP FIG. 19
20	5A	312	APP FIG. 20
21	7B	312	APP FIG. 21
Z	1		8/1
Y	1		4/1
X	5A	309	3,7/1
W	3A	309	APP FIG. 2
U	6M		9/1
T	8B	313	4/1, 8/1

DWG ISS	CD ISSUE	DWG ISS	CD ISSUE	DWG ISS	CD ISSUE
1	1	2D	APP#1B	3A	APP#2B
4D	APP#3B				

DWG ISSUE	CD ISSUE	DATE ISSUED	DRAWN	APPD
5A	APPX 4A	2-22-88		
6M	APPX 5A	5-22-88		
7B	APPX 6B	7-11-88		
8B	APPX 7B	9-16-92		

USED ON

FRAME SD	PROJECT	DSGN CONT
SD-50012-01	5ESS	IH
SD-50012-02	5ESS	IH

SUPPORTING INFORMATION

CATEGORY	NO.
	J50003B0

Copyright 1992 AT&T
All Rights Reserved

BT13

5ESS® SWITCHING EQUIPMENT

MODULAR METALLIC SERVICE UNIT CIRCUIT

DWG SIZE 6S | ISSUE 8B

AT&T | SD-50015-01 | SHEET A1 OF 83

DESIGNATION MNEMONICS INDEX

MNEMONIC	ES/SYM	DEFINITION
+5V0	1/1	+5 VOLT DC POWER, SERVICE GROUP 0
+5V1	5/1	+5 VOLT DC POWER, SERVICE GROUP 1
-48RTN0(0-1)	4/1,1/1	-48 VOLT RETURN, SERVICE GROUP 0, NETS 0 OR 1
-48RTN1(0-1)	8/1,5/1	-48 VOLT RETURN, SERVICE GROUP 1, NETS 0 OR 1
-48V0(0-1)	4/1,1/1	-48 VOLT DC POWER, SERVICE GROUP 0, NETS 0 OR 1
-48V1(0-1)	8/1,5/1	-48 VOLT DC POWER, SERVICE GROUP 1, NETS 0 OR 1
GRD04(010-178)		DIGITAL GROUND FOR EQUIPMENT LOCATIONS (010-178)
MINOR0(N,P)	4/1	POWER CONVERTER MINOR OUTPUT, SERVICE GROUP 0, (NEG,POS)SIDE
MINOR1(N,P)	8/1	POWER CONVERTER MINOR OUTPUT, SERVICE GROUP 1, (NEG,POS)SIDE
MTIB(00-15)R	1,3,5/1	METALLIC TEST INTERCONNECTION BUS, NETS (00-15), RING
MTIB(00-15)T	1,3,5/1	METALLIC TEST INTERCONNECTION BUS, NETS (00-15), TIP
0AR(00-31)L(00-07)	2/1-8	SERVICE GROUP 0, ACCESS RING,NETS 00-31, LINK 00-07
0AT(00-31)L(00-07)	2/1-8	SERVICE GROUP 0,ACCESS TIP, NETS 00-31, LINK 00-07
0ASW(0-3)(0-1)	1,2/1	SERVICE GROUP 0, All-Seems-Well, FANOUTS 0-3, NETS 0 OR 1
0A(0-7)0(0-3)0	1/1	SERVICE GROUP 0, "A" ADDRESS LEADS 0-7, OUTPUT, NETS 0-3, ACTIVE LOW
0B(0-8)0(0-3)0	1/1	SERVICE GROUP 0, "B" ADDRESS LEADS 0-8, OUTPUT, NETS 0-3, ACTIVE LOW
0CLK0(0-3)	1/1	SERVICE GROUP 0, CLOCK OUTPUTS, NETS 0-3
0CLK(0-1)N	1/1	SERVICE GROUP 0, CLOCK INPUT, NETS 0 OR 1, NEGATIVE SIDE
0CLK(0-1)P	1/1	SERVICE GROUP 0, CLOCK INPUT, NETS 0 OR 1, POSITIVE SIDE
0CURPRN	1/1	SERVICE GROUP 0, CURRENT PROTECTION RESISTOR, NEGATIVE LEAD
0CURPRP	1/1	SERVICE GROUP 0, CURRENT PROTECTION RESISTOR, POSITIVE LEAD
0DRIN(0-3)	1,2/1	SERVICE GROUP 0, DATA READ IN, NETS 0-3
0DWOUT(0-3)	1/1	SERVICE GROUP 0, DATA WRITE OUT, NETS 0-3
0EARTHG	2/1	SERVICE GROUP 0, EARTH GROUND
0INTR(0-1)N	1/1	SERVICE GROUP 0, INTERRUPT, NETS 0 OR 1, NEGATIVE LEAD
0INTR(0-1)P	1/1	SERVICE GROUP 0, INTERRUPT, NETS 0 OR 1, POSITIVE LEAD
0JR(00-03)	2/1	SERVICE GROUP 0, JUNCTOR, RING SIDE, NETS 00-03
0JT(00-03)	2/1	SERVICE GROUP 0, JUNCTOR, TIP SIDE, NETS 00-03
0MSG(0-1)N	1/1	SERVICE GROUP 0, MESSAGE, NETS 0 OR 1, NEGATIVE LEAD
0MSG(0-1)P	1/1	SERVICE GROUP 0, MESSAGE, NETS 0 OR 1, POSITIVE LEAD
0PCOOS	1/1	SERVICE GROUP 0, POWER CONVERTER Out-Of-Service INDICATOR
0READ(0-3)	1/1	SERVICE GROUP 0, READ, NETS 0-3
0RPLY(0-1)N	1/1	SERVICE GROUP 0, REPLY, NETS 0 OR 1, NEGATIVE LEAD
0RPLY(0-1)P	1/1	SERVICE GROUP 0, REPLY, NETS 0 OR 1, POSITIVE LEAD
0SACS	4/1	SERVICE GROUP 0, POWER CONVERTER REMOTE VOLTAGE SENSE CONNECTION
0SLCT(0-1)N	1/1	SERVICE GROUP 0, SELECT, NETS 0 OR 1 NEGATIVE LEAD
0SLCT(0-1)P	1/1	SERVICE GROUP 0, SELECT, NETS 0 OR 1 POSITIVE LEAD
0SRVRQ(00-31)	1/1, 2/1-8	SERVICE GROUP 0, SERVICE REQUEST, NETS 00-31
0SZS3	4/1	SERVICE GROUP 0, POWER CONVERTER REMOTE START AND SHUTDOWN CONNECTIONS
0WG(1-4)L0	2/1	SERVICE GROUP 0, WRITE GROUND, NETS 1-4, LINK 0
0WRITE(0-3)	1/1	SERVICE GROUP 0, WRITE LEAD, NETS 0-3
1AR(00-31)L(00-07)	6/1-8	SERVICE GROUP 1, ACCESS RING, NETS 00-31, LINK 00-07
1AT(00-31)L(00-07)	6/1-8	SERVICE GROUP 1,ACCESS TIP, NETS 00-31, LINK 00-07
1ASW(0-3)(0-1)	6,5/1	SERVICE GROUP 1, All-Seems-Well, FANOUTS 0-3, NETS 0 OR 1
1A(0-7)0(0-3)0	5/1	SERVICE GROUP 1, "A" ADDRESS LEADS 0-7, OUTPUT, NETS 0-3, ACTIVE LOW
1B(0-8)0(0-3)0	5/1	SERVICE GROUP 1, "B" ADDRESS LEADS 0-8, OUTPUT, NETS 0-3, ACTIVE LOW
1CLK0(0-3)	5/1	SERVICE GROUP 1, CLOCK OUTPUTS, NETS 0-3
1CLK(0-1)N	5/1	SERVICE GROUP 1, CLOCK INPUT, NETS 0 OR 1, NEGATIVE SIDE
1CLK(0-1)P	5/1	SERVICE GROUP 1, CLOCK INPUT, NETS 0 OR 1, POSITIVE SIDE
1CURPRN	5/1	SERVICE GROUP 1, CURRENT PROTECTION RESISTOR, NEGATIVE LEAD
1CURPRP	5/1	SERVICE GROUP 1, CURRENT PROTECTION RESISTOR, POSITIVE LEAD
1DRIN(0-3)	5,6/1	SERVICE GROUP 1, DATA READ IN, NETS 0-3
1DWOUT(0-3)	5/1	SERVICE GROUP 1, DATA WRITE OUT, NETS 0-3
1EARTHG	6/1	SERVICE GROUP 1, EARTH GROUND
1INTR(0-1)N	5/1	SERVICE GROUP 1, INTERRUPT, NETS 0 OR 1, NEGATIVE LEAD
1INTR(0-1)P	5/1	SERVICE GROUP 1, INTERRUPT, NETS 0 OR 1, POSITIVE LEAD
1JR(00-03)	6/1	SERVICE GROUP 1, JUNCTOR, RING SIDE, NETS 00-03
1JT(00-03)	6/1	SERVICE GROUP 1, JUNCTOR, TIP SIDE, NETS 00-03
1MSG(0-1)N	5/1	SERVICE GROUP 1, MESSAGE, NETS 0 OR 1, NEGATIVE LEAD
1MSG(0-1)P	5/1	SERVICE GROUP 1, MESSAGE, NETS 0 OR 1, POSITIVE LEAD
1PCOOS	5/1	SERVICE GROUP 1, POWER CONVERTER Out-Of-Service INDICATOR
1READ(0-3)	5/1	SERVICE GROUP 1, READ, NETS 0-3
1RPLY(0-1)N	5/1	SERVICE GROUP 1, REPLY, NETS 0 OR 1, NEGATIVE LEAD
1RPLY(0-1)P	5/1	SERVICE GROUP 1, REPLY, NETS 0 OR 1, POSITIVE LEAD
1SACS	8/1	SERVICE GROUP 1, POWER CONVERTER REMOTE VOLTAGE SENSE CONNECTION
1SLCT(0-1)N	5/1	SERVICE GROUP 1, SELECT, NETS 0 OR 1 NEGATIVE LEAD
1SRVRQ(00-31)	5/1, 6/1-8	SERVICE GROUP 1, SERVICE REQUEST, NETS 00-31
1SZS3	8/1	SERVICE GROUP 1, POWER CONVERTER REMOTE START AND SHUTDOWN CONNECTIONS
1WG(1-4)L0	6/1	SERVICE GROUP 1, WRITE GROUND, NETS 1-4
1WRITE(0-3)	5/1	SERVICE GROUP 1, WRITE LEAD, NETS 0-3

COPYRIGHT (C) 1988 AT&T
ALL RIGHTS RESERVED

MODULAR METALLIC SERVICE UNIT

DWG SIZE C2 | ISSUE 5A

AT&T | SD-5D015-01 | A2

APPARATUS INDEX

EQUIP LOC	APP NO.	FIGURE SH NO.
CIRCUIT PACKS		
04-010	2	C2
04-010	2	C2
04-018	2	C2
04-090	2	C2
04-098	2	C2
04-098	2	C2
04-106	2	C2
04-178	2	C2
DESIG		
0ACC8	2	C2
0COMM	2	C2
1ACC8	2	C2
1COMM	2	C2
PWRCONV	2	C2
PWRCONV	2	C2
PWRCONV	2	C2
PWRCONV	2	C2

DESIG	LOCATION FS/SYM	APPFIG	EQPT
CIRCUIT PACK-CP			
0ACC8	3/1	2	04-090
0COMM	1/1	2	04-018
1ACC8	7/1	2	04-178
1COMM	5/1	2	04-106
CONVERTER			
PWRCONV	8/1	2	04-098
PWRCONV	8/1	2	04-098
PWRCONV	4/1	2	04-010
PWRCONV	4/1	2	04-010
GRD SHIELD			
04-090	3/2	2	04-090

LEAD INDEX

DESIG	LOCATION FS/SYM	CAD
SESS GROUND WINDOW		
0EARTHG	2/1	007
1EARTHG	6/1	007
CONN CKT		
0A0000	1/1	004
0A0010	1/1	004
0A0020	1/1	004
0A0030	1/1	004
0A1000	1/1	004
0A1010	1/1	004
0A1020	1/1	004
0A1030	1/1	004
0A2000	1/1	004
0A2010	1/1	004
0A2020	1/1	004
0A2030	1/1	004
0A3000	1/1	004
0A3010	1/1	004
0A3020	1/1	004
0A3030	1/1	004
0A4000	1/1	004
0A4010	1/1	004
0A4020	1/1	004
0A4030	1/1	004
0A5000	1/1	004
0A5010	1/1	004
0A5020	1/1	004
0A5030	1/1	004
0A6000	1/1	004
0A6010	1/1	004
0A6020	1/1	004
0A6030	1/1	004
0A7000	1/1	004
0A7010	1/1	004
0A7020	1/1	004
0A7030	1/1	004
0AR16L00	2/1	003
0AR16L01	2/2	003
0AR16L02	2/3	003
0AR17L00	2/1	003
0AR17L01	2/2	003
0AR17L02	2/3	003
0AR18L00	2/1	003
0AR18L01	2/2	003
0AR18L02	2/3	003
0AR19L00	2/1	003
0AR19L01	2/2	003
0AR19L02	2/3	003
0AR20L00	2/1	003
0AR20L01	2/2	003
0AR20L02	2/3	003
0AR21L00	2/1	003
0AR21L01	2/2	003
0AR21L02	2/3	003
0AR22L00	2/1	003
0AR22L01	2/2	003
0AR22L02	2/3	003
0AR23L00	2/1	003
0AR23L01	2/2	003
0AR23L02	2/3	003
0AR24L00	2/1	003
0AR24L01	2/2	003
0AR24L02	2/3	003
0AR25L00	2/1	003

DESIG	LOCATION FS/SYM	CAD
CONN CKT (CONT)		
0AR25L01	2/2	003
0AR25L02	2/3	003
0AR26L00	2/1	003
0AR26L01	2/2	003
0AR26L02	2/3	003
0AR27L00	2/1	003
0AR27L01	2/2	003
0AR27L02	2/3	003
0AR28L00	2/1	003
0AR28L01	2/2	003
0AR28L02	2/3	003
0AR29L00	2/1	003
0AR29L01	2/2	003
0AR29L02	2/3	003
0AR30L00	2/1	003
0AR30L01	2/2	003
0AR30L02	2/3	003
0AR31L00	2/1	003
0AR31L01	2/2	003
0AR31L02	2/3	003
0ASW00	1/1	004
0ASW01	1/1	004
0ASW10	1/1	004
0ASW11	1/1	004
0ASW20	1/1	004
0ASW21	1/1	004
0ASW30	1/1	004
0ASW31	1/1	004
0AT16L00	2/1	003
0AT16L01	2/2	003
0AT16L02	2/3	003
0AT17L00	2/1	003
0AT17L01	2/2	003
0AT17L02	2/3	003
0AT18L00	2/1	003
0AT18L01	2/2	003
0AT18L02	2/3	003
0AT19L00	2/1	003
0AT19L01	2/2	003
0AT19L02	2/3	003
0AT20L00	2/1	003
0AT20L01	2/2	003
0AT20L02	2/3	003
0AT21L00	2/1	003
0AT21L01	2/2	003
0AT21L02	2/3	003
0AT22L00	2/1	003
0AT22L01	2/2	003
0AT22L02	2/3	003
0AT23L00	2/1	003
0AT23L01	2/2	003
0AT23L02	2/3	003
0AT24L00	2/1	003
0AT24L01	2/2	003
0AT24L02	2/3	003
0AT25L00	2/1	003
0AT25L01	2/2	003
0AT25L02	2/3	003
0AT26L00	2/1	003
0AT26L01	2/2	003
0AT26L02	2/3	003
0AT27L00	2/1	003
0AT27L01	2/2	003
0AT27L02	2/3	003
0AT28L00	2/1	003

DESIG	LOCATION FS/SYM	CAD
CONN CKT (CONT)		
0AT28L01	2/2	003
0AT28L02	2/3	003
0AT29L00	2/1	003
0AT29L01	2/2	003
0AT29L02	2/3	003
0AT30L00	2/1	003
0AT30L01	2/2	003
0AT30L02	2/3	003
0AT31L00	2/1	003
0AT31L01	2/2	003
0AT31L02	2/3	003
0B0000	1/1	004
0B0010	1/1	004
0B0020	1/1	004
0B0030	1/1	004
0B1000	1/1	004
0B1010	1/1	004
0B1020	1/1	004
0B1030	1/1	004
0B2000	1/1	004
0B2010	1/1	004
0B2020	1/1	004
0B2030	1/1	004
0B3000	1/1	004
0B3010	1/1	004
0B3020	1/1	004
0B3030	1/1	004
0B4000	1/1	004
0B4010	1/1	004
0B4020	1/1	004
0B4030	1/1	004
0B5000	1/1	004
0B5010	1/1	004
0B5020	1/1	004
0B5030	1/1	004
0B6000	1/1	004
0B6010	1/1	004
0B6020	1/1	004
0B6030	1/1	004
0B7000	1/1	004
0B7010	1/1	004
0B7020	1/1	004
0B7030	1/1	004
0B8000	1/1	004
0B8010	1/1	004
0B8020	1/1	004
0B8030	1/1	004
0CLK01	1/1	004
0CLK02	1/1	004
0CLK03	1/1	004
0DRIN1	1/1	004
0DRIN2	1/1	004
0DRIN3	1/1	004
0DWOUT1	1/1	004
0DWOUT2	1/1	004
0DWOUT3	1/1	004
0READ1	1/1	004
0READ2	1/1	004
0READ3	1/1	004
0SRVR000	1/1	004
0SRVR001	1/1	004
0SRVR002	1/1	004
0SRVR003	1/1	004
0SRVR004	1/1	004
0SRVR005	1/1	004

DESIG	LOCATION FS/SYM	CAD
CONN CKT (CONT)		
0SRVR006	1/1	004
0SRVR007	1/1	004
0SRVR008	1/1	004
0SRVR009	1/1	004
0SRVR010	1/1	004
0SRVR011	1/1	004
0SRVR012	1/1	004
0SRVR013	1/1	004
0SRVR014	1/1	004
0SRVR015	1/1	004
0SRVR016	1/1	004
0SRVR017	1/1	004
0SRVR018	1/1	004
0SRVR019	1/1	004
0SRVR020	1/1	004
0SRVR021	1/1	004
0SRVR022	1/1	004
0SRVR023	1/1	004
0SRVR024	1/1	004
0SRVR025	1/1	004
0SRVR026	1/1	004
0SRVR027	1/1	004
0SRVR028	1/1	004
0SRVR029	1/1	004
0SRVR030	1/1	004
0SRVR031	1/1	004
0WRITE1	1/1	004
0WRITE2	1/1	004
0WRITE3	1/1	004
1A0000	5/1	004
1A0010	5/1	004
1A0020	5/1	004
1A0030	5/1	004
1A1000	5/1	004
1A1010	5/1	004
1A1020	5/1	004
1A1030	5/1	004
1A2000	5/1	004
1A2010	5/1	004
1A2020	5/1	004
1A2030	5/1	004
1A3000	5/1	004
1A3010	5/1	004
1A3020	5/1	004
1A3030	5/1	004
1A4000	5/1	004
1A4010	5/1	004
1A4020	5/1	004
1A4030	5/1	004
1A5000	5/1	004
1A5010	5/1	004
1A5020	5/1	004
1A5030	5/1	004
1A6000	5/1	004
1A6010	5/1	004
1A6020	5/1	004

DESIG	LOCATION FS/SYM	CAD
CONN CKT (CONT)		
1A6030	5/1	004
1A7000	5/1	004
1A7010	5/1	004
1A7020	5/1	004
1A7030	5/1	004
1AR16L00	6/1	003
1AR16L01	6/2	003
1AR16L02	6/3	003
1AR17L00	6/1	003
1AR17L01	6/2	003
1AR17L02	6/3	003
1AR18L00	6/1	003
1AR18L01	6/2	003
1AR18L02	6/3	003
1AR19L00	6/1	003
1AR19L01	6/2	003
1AR19L02	6/3	003
1AR20L00	6/1	003
1AR20L01	6/2	003
1AR20L02	6/3	003
1AR21L00	6/1	003
1AR21L01	6/2	003
1AR21L02	6/3	003
1AR22L00	6/1	003
1AR22L01	6/2	003
1AR22L02	6/3	003
1AR23L00	6/1	003
1AR23L01	6/2	003
1AR23L02	6/3	003
1AR24L00	6/1	003
1AR24L01	6/2	003
1AR24L02	6/3	003
1AR25L00	6/1	003
1AR25L01	6/2	003
1AR25L02	6/3	003
1AR26L00	6/1	003
1AR26L01	6/2	003
1AR26L02	6/3	003
1AR27L00	6/1	003
1AR27L01	6/2	003
1AR27L02	6/3	003
1AR28L00	6/1	003
1AR28L01	6/2	003
1AR28L02	6/3	003
1AR29L00	6/1	003
1AR29L01	6/2	003
1AR29L02	6/3	003
1AR30L00	6/1	003
1AR30L01	6/2	003
1AR30L02	6/3	003
1ASW00	5/1	004
1ASW01	5/1	004
1ASW10	5/1	004
1ASW11	5/1	004
1ASW20	5/1	004
1ASW21	5/1	004

COPYRIGHT(C) 1988 AT&T
ALL RIGHTS RESERVED

MODULAR METALLIC SERVICE UNIT

DWG SIZE: C2 | ISSUE: 5A

AT&T | SD-5D015-01 | A3

LEAD INDEX (CONT)

DESIG	LOCATION FS/SYM	CAD
CONN CKT (CONT)		
1ASW30	5/1	004
1ASW31	5/1	004
1AT16L00	6/1	003
1AT16L01	6/2	003
1AT16L02	6/3	003
1AT17L00	6/1	003
1AT17L01	6/2	003
1AT17L02	6/3	003
1AT18L00	6/1	003
1AT18L01	6/2	003
1AT18L02	6/3	003
1AT19L00	6/1	003
1AT19L01	6/2	003
1AT19L02	6/3	003
1AT20L00	6/1	003
1AT20L01	6/2	003
1AT20L02	6/3	003
1AT21L00	6/1	003
1AT21L01	6/2	003
1AT21L02	6/3	003
1AT22L00	6/1	003
1AT22L01	6/2	003
1AT22L02	6/3	003
1AT23L00	6/1	003
1AT23L01	6/2	003
1AT23L02	6/3	003
1AT24L00	6/1	003
1AT24L01	6/2	003
1AT24L02	6/3	003
1AT25L00	6/1	003
1AT25L01	6/2	003
1AT25L02	6/3	003
1AT26L00	6/1	003
1AT26L01	6/2	003
1AT26L02	6/3	003
1AT27L00	6/1	003
1AT27L01	6/2	003
1AT27L02	6/3	003
1AT28L00	6/1	003
1AT28L01	6/2	003
1AT28L02	6/3	003
1AT29L00	6/1	003
1AT29L01	6/2	003
1AT29L02	6/3	003
1AT30L00	6/1	003
1AT30L01	6/2	003
1AT30L02	6/3	003
1B0000	5/1	004
1B0010	5/1	004
1B0020	5/1	004
1B0030	5/1	004
1B1000	5/1	004
1B1010	5/1	004
1B1020	5/1	004
1B1030	5/1	004
1B2000	5/1	004
1B2010	5/1	004
1B2020	5/1	004
1B2030	5/1	004
1B3000	5/1	004
1B3010	5/1	004
1B3020	5/1	004
1B3030	5/1	004
1B4000	5/1	004
1B4010	5/1	004

DESIG	LOCATION FS/SYM	CAD
CONN CKT (CONT)		
1B4020	5/1	004
1B4030	5/1	004
1B5000	5/1	004
1B5010	5/1	004
1B5020	5/1	004
1B5030	5/1	004
1B6000	5/1	004
1B6010	5/1	004
1B6020	5/1	004
1B6030	5/1	004
1B7000	5/1	004
1B7010	5/1	004
1B7020	5/1	004
1B7030	5/1	004
1B8000	5/1	004
1B8010	5/1	004
1B8020	5/1	004
1B8030	5/1	004
1CLKO1	5/1	004
1CLKO2	5/1	004
1CLKO3	5/1	004
1DRIN1	5/1	004
1DRIN2	5/1	004
1DRIN3	5/1	004
1DWOUT1	5/1	004
1DWOUT2	5/1	004
1DWOUT3	5/1	004
1.R00	7/1	006
1JR01	7/1	006
1JT00	7/1	006
1JT01	7/1	006
1READ1	5/1	004
1READ2	5/1	004
1READ3	5/1	004
1SRVR000	5/1	004
1SRVR001	5/1	004
1SRVR002	5/1	004
1SRVR003	5/1	004
1SRVR004	5/1	004
1SRVR005	5/1	004
1SRVR006	5/1	004
1SRVR007	5/1	004
1SRVR008	5/1	004
1SRVR009	5/1	004
1SRVR010	5/1	004
1SRVR011	5/1	004
1SRVR012	5/1	004
1SRVR013	5/1	004
1SRVR014	5/1	004
1SRVR015	5/1	004
1SRVR016	5/1	004
1SRVR017	5/1	004
1SRVR018	5/1	004
1SRVR019	5/1	004
1SRVR020	5/1	004
1SRVR021	5/1	004
1SRVR022	5/1	004
1SRVR023	5/1	004
1SRVR024	5/1	004
1SRVR025	5/1	004
1SRVR026	5/1	004
1SRVR027	5/1	004
1SRVR028	5/1	004
1SRVR029	5/1	004
1SRVR030	5/1	004

DESIG	LOCATION FS/SYM	CAD
CONN CKT (CONT)		
1SRVRQ31	5/1	004
1WRITE1	5/1	004
1WRITE2	5/1	004
1WRITE3	5/1	004
GRD04018	1/1	004
GRD04106	5/1	004
MTIB00R	3/1	006
MTIB00R	7/1	006
MTIB00T	3/1	006
MTIB00T	7/1	006
MTIB01R	3/1	006
MTIB01R	7/1	006
MTIB01T	3/1	006
MTIB01T	7/1	006
MTIB02R	7/1	006
MTIB02R	3/1	006
MTIB02T	3/1	006
MTIB02T	7/1	006
MTIB03R	3/1	006
MTIB03R	7/1	006
MTIB03T	3/1	006
MTIB03T	7/1	006
MTIB04R	7/1	006
MTIB04R	3/1	006
MTIB04T	3/1	006
MTIB04T	7/1	006
MTIB05R	7/1	006
MTIB05R	3/1	006
MTIB05T	3/1	006
MTIB05T	7/1	006
MTIB06R	7/1	006
MTIB06R	3/1	006
MTIB06T	3/1	006
MTIB06T	7/1	006
MTIB07R	7/1	006
MTIB07R	3/1	006
MTIB07T	3/1	006
MTIB07T	7/1	006
MTIB08R	7/1	006
MTIB08R	3/1	006
MTIB08T	3/1	006
MTIB08T	7/1	006
MTIB09R	7/1	006
MTIB09R	3/1	006
MTIB09T	3/1	006
MTIB09T	7/1	006
MTIB10R	7/1	006
MTIB10R	3/1	006
MTIB10T	3/1	006
MTIB10T	7/1	006
MTIB11R	7/1	006
MTIB11R	3/1	006
MTIB11T	3/1	006
MTIB11T	7/1	006
MTIB12R	7/1	006
MTIB12R	3/1	006
MTIB12T	3/1	006
MTIB12T	7/1	006
MTIB13R	3/1	006
MTIB13R	7/1	006
MTIB13T	3/1	006
MTIB13T	7/1	006
MTIB14R	7/1	006
MTIB14R	1/1	006
MTIB14T	1/1	006

DESIG	LOCATION FS/SYM	CAD
CONN CKT (CONT)		
MTIB14T	7/1	006
MTIB15R	7/1	006
MTIB15R	5/1	006
MTIB15T	5/1	006
MTIB15T	7/1	006
DISTRIBUTING FRAME		
0AR00L00	2/1	005
0AR00L01	2/2	005
0AR00L02	2/3	005
0AR00L03	2/4	005
0AR00L04	2/5	005
0AR00L05	2/6	005
0AR00L06	2/7	005
0AR00L07	2/8	005
0AR01L00	2/1	005
0AR01L01	2/2	005
0AR01L02	2/3	005
0AR01L03	2/4	005
0AR01L04	2/5	005
0AR01L05	2/6	005
0AR01L06	2/7	005
0AR01L07	2/8	005
0AR02L00	2/1	005
0AR02L01	2/2	005
0AR02L02	2/3	005
0AR02L03	2/4	005
0AR02L04	2/5	005
0AR02L05	2/6	005
0AR02L06	2/7	005
0AR02L07	2/8	005
0AR03L00	2/1	005
0AR03L01	2/2	005
0AR03L02	2/3	005
0AR03L03	2/4	005
0AR03L04	2/5	005
0AR03L05	2/6	005
0AR03L06	2/7	005
0AR03L07	2/8	005
0AR04L00	2/1	005
0AR04L01	2/2	005
0AR04L02	2/3	005
0AR04L03	2/4	005
0AR04L04	2/5	005
0AR04L05	2/6	005
0AR04L06	2/7	005
0AR04L07	2/8	005
0AR05L00	2/1	005
0AR05L01	2/2	005
0AR05L02	2/3	005
0AR05L03	2/4	005
0AR05L04	2/5	005
0AR05L05	2/6	005
0AR05L06	2/7	005
0AR05L07	2/8	005
0AR06L00	2/1	005
0AR06L01	2/2	005
0AR06L02	2/3	005
0AR06L03	2/4	005
0AR06L04	2/5	005
0AR06L05	2/6	005
0AR06L06	2/7	005
0AR06L07	2/8	005

DESIG	LOCATION FS/SYM	CAD
DISTRIBUTING FRAME (CONT)		
0AR07L00	2/1	005
0AR07L01	2/2	005
0AR07L02	2/3	005
0AR07L03	2/4	005
0AR07L04	2/5	005
0AR07L05	2/6	005
0AR07L06	2/7	005
0AR07L07	2/8	005
0AR08L00	2/1	005
0AR08L01	2/2	005
0AR08L02	2/3	005
0AR08L03	2/4	005
0AR08L04	2/5	005
0AR08L05	2/6	005
0AR08L06	2/7	005
0AR08L07	2/8	005
0AR09L00	2/1	005
0AR09L01	2/2	005
0AR09L02	2/3	005
0AR09L03	2/4	005
0AR09L04	2/5	005
0AR09L05	2/6	005
0AR09L06	2/7	005
0AR09L07	2/8	005
0AR10L00	2/1	005
0AR10L01	2/2	005
0AR10L02	2/3	005
0AR10L03	2/4	005
0AR10L04	2/5	005
0AR10L05	2/6	005
0AR10L06	2/7	005
0AR10L07	2/8	005
0AR11L00	2/1	005
0AR11L01	2/2	005
0AR11L02	2/3	005
0AR11L03	2/4	005
0AR11L04	2/5	005
0AR11L05	2/6	005
0AR11L06	2/7	005
0AR11L07	2/8	005
0AR12L00	2/1	005
0AR12L01	2/2	005
0AR12L02	2/3	005
0AR12L03	2/4	005
0AR12L04	2/5	005
0AR12L05	2/6	005
0AR12L06	2/7	005
0AR12L07	2/8	005
0AR13L00	2/1	005
0AR13L01	2/2	005
0AR13L02	2/3	005
0AR13L03	2/4	005
0AR13L04	2/5	005
0AR13L05	2/6	005
0AR13L06	2/7	005
0AR13L07	2/8	005
0AR14L00	2/1	005
0AR14L01	2/2	005
0AR14L02	2/3	005
0AR14L03	2/4	005
0AR14L04	2/5	005
0AR14L05	2/6	005
0AR14L06	2/7	005
0AR14L07	2/8	005
0AR15L00	2/1	005

DESIG	LOCATION FS/SYM	CAD
DISTRIBUTING FRAME (CONT)		
0AR15L01	2/2	005
0AR15L02	2/3	005
0AR15L03	2/4	005
0AR15L04	2/5	005
0AR15L05	2/6	005
0AR15L06	2/7	005
0AR15L07	2/8	005
0AR16L00	2/1	003
0AR16L01	2/2	003
0AR16L02	2/3	003
0AR16L03	2/4	005
0AR16L04	2/5	005
0AR16L05	2/6	005
0AR16L06	2/7	005
0AR16L07	2/8	005
0AR17L00	2/1	003
0AR17L01	2/2	003
0AR17L02	2/3	003
0AR17L03	2/4	005
0AR17L04	2/5	005
0AR17L05	2/6	005
0AR17L06	2/7	005
0AR17L07	2/8	005
0AR18L00	2/1	003
0AR18L01	2/2	003
0AR18L02	2/3	003
0AR18L03	2/4	005
0AR18L04	2/5	005
0AR18L05	2/6	005
0AR18L06	2/7	005
0AR18L07	2/8	005
0AR19L00	2/1	003
0AR19L01	2/2	003
0AR19L02	2/3	003
0AR19L03	2/4	005
0AR19L04	2/5	005
0AR19L05	2/6	005
0AR19L06	2/7	005
0AR19L07	2/8	005
0AR20L00	2/1	003
0AR20L01	2/2	003
0AR20L02	2/3	003
0AR20L03	2/4	005
0AR20L04	2/5	005
0AR20L05	2/6	005
0AR20L06	2/7	005
0AR20L07	2/8	005
0AR21L00	2/1	003
0AR21L01	2/2	003
0AR21L02	2/3	003
0AR21L03	2/4	005
0AR21L04	2/5	005
0AR21L05	2/6	005
0AR21L06	2/7	005
0AR21L07	2/8	005
0AR22L00	2/1	003

DESIG	LOCATION FS/SYM	CAD
DISTRIBUTING FRAME (CONT)		
0AR22L01	2/2	003
0AR22L02	2/3	003
0AR22L03	2/4	005
0AR22L04	2/5	005
0AR22L05	2/6	005
0AR22L06	2/7	005
0AR22L07	2/8	005
0AR23L00	2/1	003
0AR23L01	2/2	003
0AR23L02	2/3	003
0AR23L03	2/4	005
0AR23L04	2/5	005
0AR23L05	2/6	005
0AR23L06	2/7	005
0AR23L07	2/8	005
0AR24L00	2/1	003
0AR24L01	2/2	003
0AR24L02	2/3	003
0AR24L03	2/4	005
0AR24L04	2/5	005
0AR24L05	2/6	005
0AR24L06	2/7	005
0AR24L07	2/8	005
0AR25L00	2/1	003
0AR25L01	2/2	003
0AR25L02	2/3	003
0AR25L03	2/4	005
0AR25L04	2/5	005
0AR25L05	2/6	005
0AR25L06	2/7	005
0AR25L07	2/8	005
0AR26L00	2/1	003
0AR26L01	2/2	003
0AR26L02	2/3	003
0AR26L03	2/4	005
0AR26L04	2/5	005
0AR26L05	2/6	005
0AR26L06	2/7	005
0AR26L07	2/8	005
0AR27L00	2/1	003
0AR27L01	2/2	003
0AR27L02	2/3	003
0AR27L03	2/4	005
0AR27L04	2/5	005
0AR27L05	2/6	005
0AR27L06	2/7	005
0AR27L07	2/8	005
0AR28L00	2/1	003
0AR28L01	2/2	003
0AR28L02	2/3	003
0AR28L03	2/4	005
0AR28L04	2/5	005
0AR28L05	2/6	005
0AR28L06	2/7	005
0AR28L07	2/8	005
0AR29L00	2/1	003

COPYRIGHT(c) 1988 AT&T
ALL RIGHTS RESERVED

MODULAR METALLIC SERVICE UNIT

DWG SIZE: C2 | ISSUE: 5A

AT&T | SD-5D015-01 | A4

LEAD INDEX (CONT)

DESIG	LOCATION FS/SYM	CAD
DISTRIBUTING FRAME (CONT)		
0AR29L01	2/2	003
0AR29L02	2/3	003
0AR29L03	2/4	005
0AR29L04	2/5	005
0AR29L05	2/6	005
0AR29L06	2/7	005
0AR29L07	2/8	005
0AR30L00	2/1	003
0AR30L01	2/2	003
0AR30L02	2/3	003
0AR30L03	2/4	005
0AR30L04	2/5	005
0AR30L05	2/6	005
0AR30L06	2/7	005
0AR30L07	2/8	005
0AR31L00	2/1	003
0AR31L01	2/2	003
0AR31L02	2/3	003
0AR31L03	2/4	005
0AR31L04	2/5	005
0AR31L05	2/6	005
0AR31L06	2/7	005
0AR31L07	2/8	005
0AT00L00	2/1	005
0AT00L01	2/2	005
0AT00L02	2/3	005
0AT00L03	2/4	005
0AT00L04	2/5	005
0AT00L05	2/6	005
0AT00L06	2/7	005
0AT00L07	2/8	005
0AT01L00	2/1	005
0AT01L01	2/2	005
0AT01L02	2/3	005
0AT01L03	2/4	005
0AT01L04	2/5	005
0AT01L05	2/6	005
0AT01L06	2/7	005
0AT01L07	2/8	005
0AT02L00	2/1	005
0AT02L01	2/2	005
0AT02L02	2/3	005
0AT02L03	2/4	005
0AT02L04	2/5	005
0AT02L05	2/6	005
0AT02L06	2/7	005
0AT02L07	2/8	005
0AT03L00	2/1	005
0AT03L01	2/2	005
0AT03L02	2/3	005
0AT03L03	2/4	005
0AT03L04	2/5	005
0AT03L05	2/6	005
0AT03L06	2/7	005
0AT03L07	2/8	005
0AT04L00	2/1	005
0AT04L01	2/2	005
0AT04L02	2/3	005
0AT04L03	2/4	005
0AT04L04	2/5	005
0AT04L05	2/6	005
0AT04L06	2/7	005
0AT04L07	2/8	005
0AT05L00	2/1	005
0AT05L01	2/2	005

DESIG	LOCATION FS/SYM	CAD
DISTRIBUTING FRAME (CONT)		
0AT05L02	2/3	005
0AT05L03	2/4	005
0AT05L04	2/5	005
0AT05L05	2/6	005
0AT05L06	2/7	005
0AT05L07	2/8	005
0AT06L00	2/1	005
0AT06L01	2/2	005
0AT06L02	2/3	005
0AT06L03	2/4	005
0AT06L04	2/5	005
0AT06L05	2/6	005
0AT06L06	2/7	005
0AT06L07	2/8	005
0AT07L00	2/1	005
0AT07L01	2/2	005
0AT07L02	2/3	005
0AT07L03	2/4	005
0AT07L04	2/5	005
0AT07L05	2/6	005
0AT07L06	2/7	005
0AT07L07	2/8	005
0AT08L00	2/1	005
0AT08L01	2/2	005
0AT08L02	2/3	005
0AT08L03	2/4	005
0AT08L04	2/5	005
0AT08L05	2/6	005
0AT08L06	2/7	005
0AT08L07	2/8	005
0AT09L00	2/1	005
0AT09L01	2/2	005
0AT09L02	2/3	005
0AT09L03	2/4	005
0AT09L04	2/5	005
0AT09L05	2/6	005
0AT09L06	2/7	005
0AT09L07	2/8	005
0AT10L00	2/1	005
0AT10L01	2/2	005
0AT10L02	2/3	005
0AT10L03	2/4	005
0AT10L04	2/5	005
0AT10L05	2/6	005
0AT10L06	2/7	005
0AT10L07	2/8	005
0AT11L00	2/1	005
0AT11L01	2/2	005
0AT11L02	2/3	005
0AT11L03	2/4	005
0AT11L04	2/5	005
0AT11L05	2/6	005
0AT11L06	2/7	005
0AT11L07	2/8	005
0AT12L00	2/1	005
0AT12L01	2/2	005
0AT12L02	2/3	005
0AT12L03	2/4	005
0AT12L04	2/5	005
0AT12L05	2/6	005
0AT12L06	2/7	005
0AT12L07	2/8	005
0AT13L00	2/1	005
0AT13L01	2/2	005
0AT13L02	2/3	005

DESIG	LOCATION FS/SYM	CAD
DISTRIBUTING FRAME (CONT)		
0AT13L03	2/4	005
0AT13L04	2/5	005
0AT13L05	2/6	005
0AT13L06	2/7	005
0AT13L07	2/8	005
0AT14L00	2/1	005
0AT14L01	2/2	005
0AT14L02	2/3	005
0AT14L03	2/4	005
0AT14L04	2/5	005
0AT14L05	2/6	005
0AT14L06	2/7	005
0AT14L07	2/8	005
0AT15L00	2/1	005
0AT15L01	2/2	005
0AT15L02	2/3	005
0AT15L03	2/4	005
0AT15L04	2/5	005
0AT15L05	2/6	005
0AT15L06	2/7	005
0AT15L07	2/8	005
0AT16L00	2/1	003
0AT16L01	2/2	003
0AT16L02	2/3	003
0AT16L03	2/4	005
0AT16L04	2/5	005
0AT16L05	2/6	005
0AT16L06	2/7	005
0AT16L07	2/8	005
0AT17L00	2/1	003
0AT17L01	2/2	003
0AT17L02	2/3	003
0AT17L03	2/4	005
0AT17L04	2/5	005
0AT17L05	2/6	005
0AT17L06	2/7	005
0AT17L07	2/8	005
0AT18L00	2/1	003
0AT18L01	2/2	003
0AT18L02	2/3	003
0AT18L03	2/4	005
0AT18L04	2/5	005
0AT18L05	2/6	005
0AT18L06	2/7	005
0AT18L07	2/8	005
0AT19L00	2/1	003
0AT19L01	2/2	003
0AT19L02	2/3	003
0AT19L03	2/4	005
0AT19L04	2/5	005
0AT19L05	2/6	005
0AT19L06	2/7	005
0AT19L07	2/8	005
0AT20L00	2/1	003
0AT20L01	2/2	003
0AT20L02	2/3	003
0AT20L03	2/4	005
0AT20L04	2/5	005
0AT20L05	2/6	005
0AT20L06	2/7	005
0AT20L07	2/8	005
0AT21L00	2/1	003
0AT21L01	2/2	003
0AT21L02	2/3	003
0AT21L03	2/4	005

DESIG	LOCATION FS/SYM	CAD
DISTRIBUTING FRAME (CONT)		
0AT21L04	2/5	005
0AT21L05	2/6	005
0AT21L06	2/7	005
0AT21L07	2/8	005
0AT22L00	2/1	003
0AT22L01	2/2	003
0AT22L02	2/3	003
0AT22L03	2/4	005
0AT22L04	2/5	005
0AT22L05	2/6	005
0AT22L06	2/7	005
0AT22L07	2/8	005
0AT23L00	2/1	003
0AT23L01	2/2	003
0AT23L02	2/3	003
0AT23L03	2/4	005
0AT23L04	2/5	005
0AT23L05	2/6	005
0AT23L06	2/7	005
0AT23L07	2/8	005
0AT24L00	2/1	003
0AT24L01	2/2	003
0AT24L02	2/3	003
0AT24L03	2/4	005
0AT24L04	2/5	005
0AT24L05	2/6	005
0AT24L06	2/7	005
0AT24L07	2/8	005
0AT25L00	2/1	003
0AT25L01	2/2	003
0AT25L02	2/3	003
0AT25L03	2/4	005
0AT25L04	2/5	005
0AT25L05	2/6	005
0AT25L06	2/7	005
0AT25L07	2/8	005
0AT26L00	2/1	003
0AT26L01	2/2	003
0AT26L02	2/3	003
0AT26L03	2/4	005
0AT26L04	2/5	005
0AT26L05	2/6	005
0AT26L06	2/7	005
0AT26L07	2/8	005
0AT27L00	2/1	003
0AT27L01	2/2	003
0AT27L02	2/3	003
0AT27L03	2/4	005
0AT27L04	2/5	005
0AT27L05	2/6	005
0AT27L06	2/7	005
0AT27L07	2/8	005
0AT28L00	2/1	003
0AT28L01	2/2	003
0AT28L02	2/3	003
0AT28L03	2/4	005
0AT28L04	2/5	005
0AT28L05	2/6	005
0AT28L06	2/7	005
0AT28L07	2/8	005
0AT29L00	2/1	003
0AT29L01	2/2	003
0AT29L02	2/3	003
0AT29L03	2/4	005
0AT29L04	2/5	005

DESIG	LOCATION FS/SYM	CAD
DISTRIBUTING FRAME (CONT)		
0AT29L05	2/6	005
0AT29L06	2/7	005
0AT29L07	2/8	005
0AT30L00	2/1	003
0AT30L01	2/2	003
0AT30L02	2/3	003
0AT30L03	2/4	005
0AT30L04	2/5	005
0AT30L05	2/6	005
0AT30L06	2/7	005
0AT30L07	2/8	005
0AT31L00	2/1	003
0AT31L01	2/2	003
0AT31L02	2/3	003
0AT31L03	2/4	005
0AT31L04	2/5	005
0AT31L05	2/6	005
0AT31L06	2/7	005
0AT31L07	2/8	005
1AR00L00	6/1	005
1AR00L01	6/2	005
1AR00L02	6/3	005
1AR00L03	6/4	005
1AR00L04	6/5	005
1AR00L05	6/6	005
1AR00L06	6/7	005
1AR00L07	6/8	005
1AR01L00	6/1	005
1AR01L01	6/2	005
1AR01L02	6/3	005
1AR01L03	6/4	005
1AR01L04	6/5	005
1AR01L05	6/6	005
1AR01L06	6/7	005
1AR01L07	6/8	005
1AR02L00	6/1	005
1AR02L01	6/2	005
1AR02L02	6/3	005
1AR02L03	6/4	005
1AR02L04	6/5	005
1AR02L05	6/6	005
1AR02L06	6/7	005
1AR02L07	6/8	005
1AR03L00	6/1	005
1AR03L01	6/2	005
1AR03L02	6/3	005
1AR03L03	6/4	005
1AR03L04	6/5	005
1AR03L05	6/6	005
1AR03L06	6/7	005
1AR03L07	6/8	005
1AR04L00	6/1	005
1AR04L01	6/2	005
1AR04L02	6/3	005
1AR04L03	6/4	005
1AR04L04	6/5	005
1AR04L05	6/6	005
1AR04L06	6/7	005
1AR04L07	6/8	005
1AR05L00	6/1	005
1AR05L01	6/2	005
1AR05L02	6/3	005
1AR05L03	6/4	005
1AR05L04	6/5	005
1AR05L05	6/6	005

DESIG	LOCATION FS/SYM	CAD
DISTRIBUTING FRAME (CONT)		
1AR05L06	6/7	005
1AR05L07	6/8	005
1AR06L00	6/1	005
1AR06L01	6/2	005
1AR06L02	6/3	005
1AR06L03	6/4	005
1AR06L04	6/5	005
1AR06L05	6/6	005
1AR06L06	6/7	005
1AR06L07	6/8	005
1AR07L00	6/1	005
1AR07L01	6/2	005
1AR07L02	6/3	005
1AR07L03	6/4	005
1AR07L04	6/5	005
1AR07L05	6/6	005
1AR07L06	6/7	005
1AR07L07	6/8	005
1AR08L00	6/1	005
1AR08L01	6/2	005
1AR08L02	6/3	005
1AR08L03	6/4	005
1AR08L04	6/5	005
1AR08L05	6/6	005
1AR08L06	6/7	005
1AR08L07	6/8	005
1AR09L00	6/1	005
1AR09L01	6/2	005
1AR09L02	6/3	005
1AR09L03	6/4	005
1AR09L04	6/5	005
1AR09L05	6/6	005
1AR09L06	6/7	005
1AR09L07	6/8	005
1AR10L00	6/1	005
1AR10L01	6/2	005
1AR10L02	6/3	005
1AR10L03	6/4	005
1AR10L04	6/5	005
1AR10L05	6/6	005
1AR10L06	6/7	005
1AR10L07	6/8	005
1AR11L00	6/1	005
1AR11L01	6/2	005
1AR11L02	6/3	005
1AR11L03	6/4	005
1AR11L04	6/5	005
1AR11L05	6/6	005
1AR11L06	6/7	005
1AR11L07	6/8	005
1AR12L00	6/1	005
1AR12L01	6/2	005
1AR12L02	6/3	005
1AR12L03	6/4	005
1AR12L04	6/5	005
1AR12L05	6/6	005

DESIG	LOCATION FS/SYM	CAD
DISTRIBUTING FRAME (CONT)		
1AR12L06	6/7	005
1AR12L07	6/8	005
1AR13L00	6/1	005
1AR13L01	6/2	005
1AR13L02	6/3	005
1AR13L03	6/4	005
1AR13L04	6/5	005
1AR13L05	6/6	005
1AR13L06	6/7	005
1AR13L07	6/8	005
1AR14L00	6/1	005
1AR14L01	6/2	005
1AR14L02	6/3	005
1AR14L03	6/4	005
1AR14L04	6/5	005
1AR14L05	6/6	005
1AR14L06	6/7	005
1AR14L07	6/8	005
1AR15L00	6/1	005
1AR15L01	6/2	005
1AR15L02	6/3	005
1AR15L03	6/4	005
1AR15L04	6/5	005
1AR15L05	6/6	005
1AR15L06	6/7	005
1AR15L07	6/8	005
1AR16L00	6/1	003
1AR16L01	6/2	003
1AR16L02	6/3	003
1AR16L03	6/4	005
1AR16L04	6/5	005
1AR16L05	6/6	005
1AR16L06	6/7	005
1AR16L07	6/8	005
1AR17L00	6/1	003
1AR17L01	6/2	003
1AR17L02	6/3	003
1AR17L03	6/4	005
1AR17L04	6/5	005
1AR17L05	6/6	005
1AR17L06	6/7	005
1AR17L07	6/8	005
1AR18L00	6/1	003
1AR18L01	6/2	003
1AR18L02	6/3	003
1AR18L03	6/4	005
1AR18L04	6/5	005
1AR18L05	6/6	005
1AR18L06	6/7	005
1AR18L07	6/8	005
1AR19L00	6/1	003
1AR19L01	6/2	003
1AR19L02	6/3	003
1AR19L03	6/4	005
1AR19L04	6/5	005
1AR19L05	6/6	005

COPYRIGHT(C) 1988 AT&T
ALL RIGHTS RESERVED

MODULAR METALLIC SERVICE UNIT

DWG SIZE: C2

ISSUE: 5A

AT&T

SD-5D015-01

A5

LEAD INDEX (CONT)

DESIG	LOCATION FS/SYM	CAD
DISTRIBUTING FRAME (CONT)		
1AR19L06	6/7	005
1AR19L07	6/8	005
1AR20L00	6/1	003
1AR20L01	6/2	003
1AR20L02	6/3	003
1AR20L03	6/4	005
1AR20L04	6/5	005
1AR20L05	6/6	005
1AR20L06	6/7	005
1AR20L07	6/8	005
1AR21L00	6/1	003
1AR21L01	6/2	003
1AR21L02	6/3	003
1AR21L03	6/4	005
1AR21L04	6/5	005
1AR21L05	6/6	005
1AR21L06	6/7	005
1AR21L07	6/8	005
1AR22L00	6/1	003
1AR22L01	6/2	003
1AR22L02	6/3	003
1AR22L03	6/4	005
1AR22L04	6/5	005
1AR22L05	6/6	005
1AR22L06	6/7	005
1AR22L07	6/8	005
1AR23L00	6/1	003
1AR23L01	6/2	003
1AR23L02	6/3	003
1AR23L03	6/4	005
1AR23L04	6/5	005
1AR23L05	6/6	005
1AR23L06	6/7	005
1AR23L07	6/8	005
1AR24L00	6/1	003
1AR24L01	6/2	003
1AR24L02	6/3	003
1AR24L03	6/4	005
1AR24L04	6/5	005
1AR24L05	6/6	005
1AR24L06	6/7	005
1AR24L07	6/8	005
1AR25L00	6/1	003
1AR25L01	6/2	003
1AR25L02	6/3	003
1AR25L03	6/4	005
1AR25L04	6/5	005
1AR25L05	6/6	005
1AR25L06	6/7	005
1AR25L07	6/8	005
1AR26L00	6/1	003
1AR26L01	6/2	003
1AR26L02	6/3	003
1AR26L03	6/4	005
1AR26L04	6/5	005
1AR26L05	6/6	005
1AR26L06	6/7	005
1AR26L07	6/8	005
1AR27L00	6/1	003
1AR27L01	6/2	003
1AR27L02	6/3	003
1AR27L03	6/4	005
1AR27L04	6/5	005
1AR27L05	6/6	005
1AR27L06	6/7	005

DESIG	LOCATION FS/SYM	CAD
DISTRIBUTING FRAME (CONT)		
1AR27L07	6/8	005
1AR28L00	6/1	003
1AR28L01	6/2	003
1AR28L02	6/3	003
1AR28L03	6/4	005
1AR28L04	6/5	005
1AR28L05	6/6	005
1AR28L06	6/7	005
1AR28L07	6/8	005
1AR29L00	6/1	003
1AR29L01	6/2	003
1AR29L02	6/3	003
1AR29L03	6/4	005
1AR29L04	6/5	005
1AR29L05	6/6	005
1AR29L06	6/7	005
1AR29L07	6/8	005
1AR30L00	6/1	003
1AR30L01	6/2	003
1AR30L02	6/3	003
1AR30L03	6/4	005
1AR30L04	6/5	005
1AR30L05	6/6	005
1AR30L06	6/7	005
1AR30L07	6/8	005
1AR31L00	6/1	003
1AR31L01	6/2	003
1AR31L02	6/3	003
1AR31L03	6/4	005
1AR31L04	6/5	005
1AR31L05	6/6	005
1AR31L06	6/7	005
1AR31L07	6/8	005
1AT00L00	6/1	005
1AT00L01	6/2	005
1AT00L02	6/3	005
1AT00L03	6/4	005
1AT00L04	6/5	005
1AT00L05	6/6	005
1AT00L06	6/7	005
1AT00L07	6/8	005
1AT01L00	6/1	005
1AT01L01	6/2	005
1AT01L02	6/3	005
1AT01L03	6/4	005
1AT01L04	6/5	005
1AT01L05	6/6	005
1AT01L06	6/7	005
1AT01L07	6/8	005
1AT02L00	6/1	005
1AT02L01	6/2	005
1AT02L02	6/3	005
1AT02L03	6/4	005
1AT02L04	6/5	005
1AT02L05	6/6	005
1AT02L06	6/7	005
1AT02L07	6/8	005
1AT03L00	6/1	005
1AT03L01	6/2	005
1AT03L02	6/3	005
1AT03L03	6/4	005
1AT03L04	6/5	005
1AT03L05	6/6	005
1AT03L06	6/7	005
1AT03L07	6/8	005

DESIG	LOCATION FS/SYM	CAD
DISTRIBUTING FRAME (CONT)		
1AT04L00	6/1	005
1AT04L01	6/2	005
1AT04L02	6/3	005
1AT04L03	6/4	005
1AT04L04	6/5	005
1AT04L05	6/6	005
1AT04L06	6/7	005
1AT04L07	6/8	005
1AT05L00	6/1	005
1AT05L01	6/2	005
1AT05L02	6/3	005
1AT05L03	6/4	005
1AT05L04	6/5	005
1AT05L05	6/6	005
1AT05L06	6/7	005
1AT05L07	6/8	005
1AT06L00	6/1	005
1AT06L01	6/2	005
1AT06L02	6/3	005
1AT06L03	6/4	005
1AT06L04	6/5	005
1AT06L05	6/6	005
1AT06L06	6/7	005
1AT06L07	6/8	005
1AT07L00	6/1	005
1AT07L01	6/2	005
1AT07L02	6/3	005
1AT07L03	6/4	005
1AT07L04	6/5	005
1AT07L05	6/6	005
1AT07L06	6/7	005
1AT07L07	6/8	005
1AT08L00	6/1	005
1AT08L01	6/2	005
1AT08L02	6/3	005
1AT08L03	6/4	005
1AT08L04	6/5	005
1AT08L05	6/6	005
1AT08L06	6/7	005
1AT08L07	6/8	005
1AT09L00	6/1	005
1AT09L01	6/2	005
1AT09L02	6/3	005
1AT09L03	6/4	005
1AT09L04	6/5	005
1AT09L05	6/6	005
1AT09L06	6/7	005
1AT09L07	6/8	005
1AT10L00	6/1	005
1AT10L01	6/2	005
1AT10L02	6/3	005
1AT10L03	6/4	005
1AT10L04	6/5	005
1AT10L05	6/6	005
1AT10L06	6/7	005
1AT10L07	6/8	005
1AT11L00	6/1	005
1AT11L01	6/2	005
1AT11L02	6/3	005
1AT11L03	6/4	005
1AT11L04	6/5	005
1AT11L05	6/6	005
1AT11L06	6/7	005
1AT11L07	6/8	005
1AT12L00	6/1	005

DESIG	LOCATION FS/SYM	CAD
DISTRIBUTING FRAME (CONT)		
1AT12L01	6/2	005
1AT12L02	6/3	005
1AT12L03	6/4	005
1AT12L04	6/5	005
1AT12L05	6/6	005
1AT12L06	6/7	005
1AT12L07	6/8	005
1AT13L00	6/1	005
1AT13L01	6/2	005
1AT13L02	6/3	005
1AT13L03	6/4	005
1AT13L04	6/5	005
1AT13L05	6/6	005
1AT13L06	6/7	005
1AT13L07	6/8	005
1AT14L00	6/1	005
1AT14L01	6/2	005
1AT14L02	6/3	005
1AT14L03	6/4	005
1AT14L04	6/5	005
1AT14L05	6/6	005
1AT14L06	6/7	005
1AT14L07	6/8	005
1AT15L00	6/1	005
1AT15L01	6/2	005
1AT15L02	6/3	005
1AT15L03	6/4	005
1AT15L04	6/5	005
1AT15L05	6/6	005
1AT15L06	6/7	005
1AT15L07	6/8	005
1AT16L00	6/1	003
1AT16L01	6/2	003
1AT16L02	6/3	003
1AT16L03	6/4	005
1AT16L04	6/5	005
1AT16L05	6/6	005
1AT16L06	6/7	005
1AT16L07	6/8	005
1AT17L00	6/1	003
1AT17L01	6/2	003
1AT17L02	6/3	003
1AT17L03	6/4	005
1AT17L04	6/5	005
1AT17L05	6/6	005
1AT17L06	6/7	005
1AT17L07	6/8	005
1AT18L00	6/1	003
1AT18L01	6/2	003
1AT18L02	6/3	003
1AT18L03	6/4	005
1AT18L04	6/5	005
1AT18L05	6/6	005
1AT18L06	6/7	005
1AT18L07	6/8	005
1AT19L00	6/1	003
1AT19L01	6/2	003
1AT19L02	6/3	003
1AT19L03	6/4	005
1AT19L04	6/5	005
1AT19L05	6/6	005
1AT19L06	6/7	005
1AT19L07	6/8	005
1AT20L00	6/1	003
1AT20L01	6/2	003

DESIG	LOCATION FS/SYM	CAD
DISTRIBUTING FRAME (CONT)		
1AT20L02	6/3	003
1AT20L03	6/4	005
1AT20L04	6/5	005
1AT20L05	6/6	005
1AT20L06	6/7	005
1AT20L07	6/8	005
1AT21L00	6/1	003
1AT21L01	6/2	003
1AT21L02	6/3	003
1AT21L03	6/4	005
1AT21L04	6/5	005
1AT21L05	6/6	005
1AT21L06	6/7	005
1AT21L07	6/8	005
1AT22L00	6/1	003
1AT22L01	6/2	003
1AT22L02	6/3	003
1AT22L03	6/4	005
1AT22L04	6/5	005
1AT22L05	6/6	005
1AT22L06	6/7	005
1AT22L07	6/8	005
1AT23L00	6/1	003
1AT23L01	6/2	003
1AT23L02	6/3	003
1AT23L03	6/4	005
1AT23L04	6/5	005
1AT23L05	6/6	005
1AT23L06	6/7	005
1AT23L07	6/8	005
1AT24L00	6/1	003
1AT24L01	6/2	003
1AT24L02	6/3	003
1AT24L03	6/4	005
1AT24L04	6/5	005
1AT24L05	6/6	005
1AT24L06	6/7	005
1AT24L07	6/8	005
1AT25L00	6/1	003
1AT25L01	6/2	003
1AT25L02	6/3	003
1AT25L03	6/4	005
1AT25L04	6/5	005
1AT25L05	6/6	005
1AT25L06	6/7	005
1AT25L07	6/8	005
1AT26L00	6/1	003
1AT26L01	6/2	003
1AT26L02	6/3	003
1AT26L03	6/4	005
1AT26L04	6/5	005
1AT26L05	6/6	005
1AT26L06	6/7	005
1AT26L07	6/8	005
1AT27L00	6/1	003
1AT27L01	6/2	003
1AT27L02	6/3	003
1AT27L03	6/4	005
1AT27L04	6/5	005
1AT27L05	6/6	005
1AT27L06	6/7	005
1AT27L07	6/8	005
1AT28L00	6/1	003
1AT28L01	6/2	003
1AT28L02	6/3	003

DESIG	LOCATION FS/SYM	CAD
DISTRIBUTING FRAME (CONT)		
1AT28L03	6/4	005
1AT28L04	6/5	005
1AT28L05	6/6	005
1AT28L06	6/7	005
1AT28L07	6/8	005
1AT29L00	6/1	003
1AT29L01	6/2	003
1AT29L02	6/3	003
1AT29L03	6/4	005
1AT29L04	6/5	005
1AT29L05	6/6	005
1AT29L06	6/7	005
1AT29L07	6/8	005
1AT30L00	6/1	003
1AT30L01	6/2	003
1AT30L02	6/3	003
1AT30L03	6/4	005
1AT30L04	6/5	005
1AT30L05	6/6	005
1AT30L06	6/7	005
1AT30L07	6/8	005
1AT31L00	6/1	003
1AT31L01	6/2	003
1AT31L02	6/3	003
1AT31L03	6/4	005
1AT31L04	6/5	005
1AT31L05	6/6	005
1AT31L06	6/7	005
1AT31L07	6/8	005

DESIG	FS/SYM	CAD
FUSE PANEL		
-48RTN00	4/1	007
-48RTN01	1/1	007
-48RTN10	8/1	007
-48RTN11	5/1	007
-48V00	4/1	007
-48V01	1/1	007
-48V10	8/1	007
-48V11	5/1	007
GRD04010	4/1	007

DESIG	FS/SYM	CAD
INTERFACE MODULE PROCESSOR UNIT		
0CLKON	1/1	002
0CLKOP	1/1	002
0CLK1N	1/1	002
0CLK1P	1/1	002
0INTRON	1/1	002
0INTROP	1/1	002
0INTR1N	1/1	002
0INTR1P	1/1	002
0MSGON	1/1	002

DESIG	FS/SYM	CAD
INTERFACE MODULE PROCESSOR UNIT (CONT)		
0MSGOP	1/1	002
0MSG1N	1/1	002
0MSG1P	1/1	002
0RPLYON	1/1	002
0RPLYOP	1/1	002
0RPLY1N	1/1	002
0RPLY1P	1/1	002
0SLCTON	1/1	002
0SLCTOP	1/1	002
0SLCT1N	1/1	002
0SLCT1P	1/1	002
1CLKON	5/1	002
1CLKOP	5/1	002
1CLK1N	5/1	002
1CLK1P	5/1	002
1INTRON	5/1	002
1INTROP	5/1	002
1INTR1N	5/1	002
1INTR1P	5/1	002
1MSGON	5/1	002
1MSGOP	5/1	002
1MSG1N	5/1	002
1MSG1P	5/1	002
1RPLYON	5/1	002
1RPLYOP	5/1	002
1RPLY1N	5/1	002
1RPLY1P	5/1	002
1SLCTON	5/1	002
1SLCTOP	5/1	002
1SLCT1N	5/1	002
1SLCT1P	5/1	002

COPYRIGHT(C) 1988 AT&T
ALL RIGHTS RESERVED

MODULAR METALLIC SERVICE UNIT

DWG SIZE: C2 | ISSUE: 5A

AT&T | SD-5D015-01 | A6

PART OF FS I

DATA AND CONTROL - SERVICE GROUP O
(P/O INTERCONNECTION & FLOW DIAGRAM)

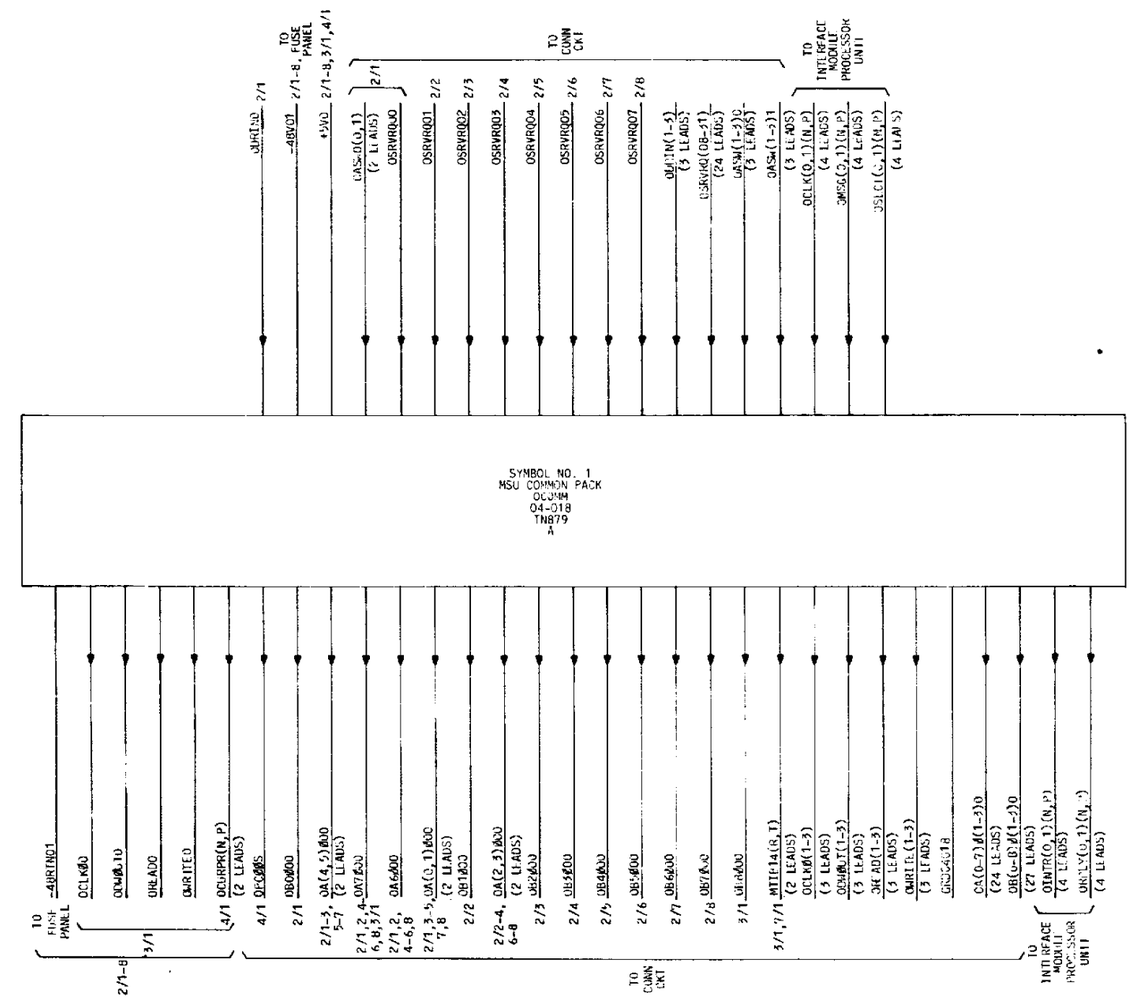

Copyright© 1988 AT&T
All Rights Reserved

MODULAR METALLIC SERVICE UNIT		DWG SIZE	ISSUE
		6S	5A
AT&T	SD-5D015-01		BIAA

PRINTED IN U.S.A.

PART OF FS 1

DATA AND CONTROL - SERVICE GROUP 0

SYMBOL NO. 1

MSU COMMON PACK

DESIG: 0COMM | EQPT LOC: 04-018 | CODE: TN879 | ELEM IDENT: A | OPT:

LEAD DESIG	FUNC	TERM. MOD	TERM.	TERM. OPT	DESTINATION	NOTE
NC	GRD	MRST	233			
+5V0	PWR	+5	034		1/1	
	PWR	+5	134		1/1	
	PWR	+5	135		1/1	
	PWR	+5	035		3/1,4/1 2/1,2/2 2/3,2/4 2/5,2/6 2/7,2/8	
-48RTN01	GRD	-48RTN	200		1/1 TO FUSE PANEL	
	GRD	-48RTN	201		1/1	
	GRD	-48RTN	300		1/1	
	GRD	-48RTN	301		2/1,2/2 2/3,2/4 2/5,2/6 2/7,2/8	
-48V01	PWR	-48	001		1/1	
	PWR	-48	100		1/1	
	PWR	-48	101		1/1	
	PWR	-48	000		2/1,2/2 2/3,2/4 2/5,2/6 2/7,2/8 TO FUSE PANEL	
GRD04018	GRD	GRD	010			
	GRD	GRD	013		TO CONN CKT	
	GRD	GRD	033			
	GRD	GRD	036			
	GRD	GRD	049			
	GRD	GRD	055			
	GRD	GRD	113			
	GRD	GRD	115			
	GRD	GRD	133			
	GRD	GAD	136			
	GRD	GRD	138			
	GRD	GRD	149			
	GRD	GRD	155			
	GRD	GRD	210			
	GRD	GRD	213			
	GRD	GRD	224			
	GRD	GRD	234			
	GRD	GRD	235			
	GRD	GRD	236			
	GRD	GRD	247			
	GRD	GRD	249			
	GRD	GRD	255			
	GRD	GRD	313			
	GRD	GRD	315			
	GRD	GRD	334			
	GRD	GRD	335			
	GRD	GRD	336			
	GRD	GRD	338			
	GRD	GRD	349			
	GRD	GRD	355			
MTIB14R	O	MTIBR	212		3/1,7/1 TO CONN CKT	
MTIB14T	O	MTIBT	312		3/1,7/1 TO CONN CKT	
0ASW00	I	ASW00	011		3/1 TO CONN CKT	
0ASW01	I	ASW01	111		3/1 TO CONN CKT	
0ASW10	I	ASW10	211		TO CONN CKT	

SYMBOL NO. 1 (CONT)

MSU COMMON PACK

DESIG: 0COMM | EQPT LOC: 04-018 | CODE: TN879 | ELEM IDENT: A | OPT:

LEAD DESIG	FUNC	TERM. MOD	TERM.	TERM. OPT	DESTINATION	NOTE
0ASW11	I	ASW11	311		TO CONN CKT	
0ASW20	I	ASW20	232		TO CONN CKT	
0ASW21	I	ASW21	332		TO CONN CKT	
0ASW30	I	ASW30	248		TO CONN CKT	
0ASW31	I	ASW31	348		TO CONN CKT	
0A0000	O	A0000	002		2/1,2/3 2/4,2/5 2/7,2/8 TO CONN CKT	
0A0010	O	A0010	202		TO CONN CKT	
0A0020	O	A0020	021		TO CONN CKT	
0A0030	O	A0030	044		TO CONN CKT	
0A1000	O	A1000	003		2/1,2/3 2/4,2/5 2/7,2/8 TO CONN CKT	
0A1010	O	A1010	203		TO CONN CKT	
0A1020	O	A1020	022		TO CONN CKT	
0A1030	O	A1030	045		TO CONN CKT	
0A2000	O	A2000	004		2/2,2/3 2/4,2/6 2/7,2/8 TO CONN CKT	
0A2010	O	A2010	204		TO CONN CKT	
0A2020	O	A2020	023		TO CONN CKT	
0A2030	O	A2030	046		TO CONN CKT	
0A3000	O	A3000	005		2/2,2/3 2/4,2/6 2/7,2/8 TO CONN CKT	
0A3010	O	A3010	205		TO CONN CKT	
0A3020	O	A3020	024		TO CONN CKT	
0A3030	O	A3030	047		TO CONN CKT	
0A4000	O	A4000	006		2/1,2/2 2/3,2/5 2/6,2/7 TO CONN CKT	
0A4010	O	A4010	206		TO CONN CKT	
0A4020	O	A4020	032		TO CONN CKT	
0A4030	O	A4030	048		TO CONN CKT	
0A5000	O	A5000	007		2/1,2/2 2/3,2/5 2/6,2/7 TO CONN CKT	
0A5010	O	A5010	207		TO CONN CKT	
0A5020	O	A5020	221		TO CONN CKT	
0A5030	O	A5030	244		TO CONN CKT	
0A6000	O	A6000	008		2/1,2/2 2/4,2/5 2/6,2/8 TO CONN CKT	
0A6010	O	A6010	208		TO CONN CKT	
0A6020	O	A6020	222		TO CONN CKT	
0A6030	O	A6030	245		TO CONN CKT	
0A7000	O	A7000	009		2/1,2/2 2/4,2/5 2/6,2/8 3/1 TO CONN CKT	
0A7010	O	A7010	209		TO CONN CKT	
0A7020	O	A7020	223		TO CONN CKT	
0A7030	O	A7030	246		TO CONN CKT	
0B0000	O	B0000	102		2/1 TO CONN CKT	
0B0010	O	B0010	302		TO CONN CKT	

SYMBOL NO. 1 (CONT)

MSU COMMON PACK

DESIG: 0COMM | EQPT LOC: 04-018 | CODE: TN879 | ELEM IDENT: A | OPT:

LEAD DESIG	FUNC	TERM. MOD	TERM.	TERM. OPT	DESTINATION	NOTE
0B0020	O	B0020	121		TO CONN CKT	
0B0030	O	B0030	144		TO CONN CKT	
0B1000	O	B1000	103		2/2 TO CONN CKT	
0B1010	O	B1010	303		TO CONN CKT	
0B1020	O	B1020	122		TO CONN CKT	
0B1030	O	B1030	145		TO CONN CKT	
0B2000	O	B2000	104		2/3 TO CONN CKT	
0B2010	O	B2010	304		TO CONN CKT	
0B2020	O	B2020	123		TO CONN CKT	
0B2030	O	B2030	146		TO CONN CKT	
0B3000	O	B3000	105		2/4 TO CONN CKT	
0B3010	O	B3010	305		TO CONN CKT	
0B3020	O	B3020	124		TO CONN CKT	
0B3030	O	B3030	147		TO CONN CKT	
0B4000	O	B4000	106		2/5 TO CONN CKT	
0B4010	O	B4010	306		TO CONN CKT	
0B4020	O	B4020	132		TO CONN CKT	
0B4030	O	B4030	148		TO CONN CKT	
0B5000	O	B5000	107		2/6 TO CONN CKT	
0B5010	O	B5010	307		TO CONN CKT	
0B5020	O	B5020	321		TO CONN CKT	
0B5030	O	B5030	344		TO CONN CKT	
0B6000	O	B6000	108		2/7 TO CONN CKT	
0B6010	O	B6010	308		TO CONN CKT	
0B6020	O	B6020	322		TO CONN CKT	
0B6030	O	B6030	345		TO CONN CKT	
0B7000	O	B7000	109		2/8 TO CONN CKT	
0B7010	O	B7010	309		TO CONN CKT	
0B7020	O	B7020	323		TO CONN CKT	
0B7030	O	B7030	346		TO CONN CKT	
0B8000	O	B8000	110		3/1 TO CONN CKT	
0B8010	O	B8010	310		TO CONN CKT	
0B8020	O	B8020	324		TO CONN CKT	
0B8030	O	B8030	347		TO CONN CKT	
0CLK00	O	CLK00	116		2/1,2/2 2/3,2/4 2/5,2/6 2/7,2/8 3/1	
0CLK01	O	CLK01	139		TO CONN CKT	
0CLK02	O	CLK02	316		TO CONN CKT	
0CLK03	O	CLK03	339		TO CONN CKT	
0CLKON	I	CLKON	252		TO INTERFACE MODULE PROCESSOR UNIT	
0CLK0P	I	CLK0P	352		TO INTERFACE MODULE PROCESSOR UNIT	
0CLK1N	I	CLK1N	052		TO INTERFACE MODULE PROCESSOR UNIT	
0CLK1P	I	CLK1P	152		TO INTERFACE MODULE PROCESSOR UNIT	
0CURPRN	OT I	-CURPR	012		3/1 2/1,2/2 2/3,2/4 2/5,2/6 2/7,2/8 4/1	

SYMBOL NO. 1 (CONT)

MSU COMMON PACK

DESIG: 0COMM | EQPT LOC: 04-018 | CODE: TN879 | ELEM IDENT: A | OPT:

LEAD DESIG	FUNC	TERM. MOD	TERM.	TERM. OPT	DESTINATION	NOTE
0CURPRP	OT I	+CURPR	112		3/1 2/1,2/2 2/3,2/4 2/5,2/6 2/7,2/8 4/1	
0DRIN0	I	DRIN0	014		3/1	
0DRIN1	I	DRIN1	037		TO CONN CKT	
0DRIN2	I	DRIN2	214		TO CONN CKT	
0DRIN3	I	DRIN3	237		TO CONN CKT	
0DWOUT0	O	DW00	114		2/1,2/2 2/3,2/4 2/5,2/6 2/7,2/8 3/1	
0DWOUT1	O	DW01	137		TO CONN CKT	
0DWOUT2	O	DW02	314		TO CONN CKT	
0DWOUT3	O	DW03	337		TO CONN CKT	
0INTRON	O	INTRON	250		TO INTERFACE MODULE PROCESSOR UNIT	
0INTROP	O	INTROP	350		TO INTERFACE MODULE PROCESSOR UNIT	
0INTR1N	O	INTR1N	050		TO INTERFACE MODULE PROCESSOR UNIT	
0INTR1P	O	INTR1P	150		TO INTERFACE MODULE PROCESSOR UNIT	
0MSG0N	I	MSG0N	253		TO INTERFACE MODULE PROCESSOR UNIT	
0MSG0P	I	MSG0P	353		TO INTERFACE MODULE PROCESSOR UNIT	
0MSG1N	I	MSG1N	053		TO INTERFACE MODULE PROCESSOR UNIT	
0MSG1P	I	MSG1P	153		TO INTERFACE MODULE PROCESSOR UNIT	
0PCOOS	O	PCOOS	333		4/1	
0READ0	O	RD00	016		2/1,2/2 2/3,2/4 2/5,2/6 2/7,2/8 3/1	
0READ1	O	RD10	039		TO CONN CKT	
0READ2	O	RD20	216		TO CONN CKT	
0READ3	O	RD30	239		TO CONN CKT	
0RPLYON	O	RPLYON	254		TO INTERFACE MODULE PROCESSOR UNIT	
0RPLYOP	O	RPLYOP	354		TO INTERFACE MODULE PROCESSOR UNIT	
0RPLY1N	O	RPLY1N	054		TO INTERFACE	

PART OF FS 1

SYMBOL(S) 1

COPYRIGHT (C) 1988 AT&T
ALL RIGHTS RESERVED

MODULAR METALLIC SERVICE UNIT

DWG SIZE: D2 | ISSUE: 5A

AT&T | SD-5D015-01 | B1CA

PRINTED IN U.S.A.

PART OF FS 1

DATA AND CONTROL - SERVICE GROUP 0

SYMBOL NO. 1 (CONT)

MSU COMMON PACK

DESIG	EQPT LOC	CODE	ELEM IDENT	OPT
0COMM	04-018	TN879	A	

LEAD DESIG	FUNC	TERM. MOD	TERM.	TERM. OPT	DESTINATION	NOTE
0RPLY1P	O	RPLY1P	154		MODULE PROCESSOR UNIT TO INTERFACE MODULE PROCESSOR UNIT	
0SLCT0N	I	SLCT0N	251		TO INTERFACE MODULE PROCESSOR UNIT	
0SLCT0P	I	SLCT0P	351		TO INTERFACE MODULE PROCESSOR UNIT	
0SLCT1N	I	SLCT1N	051		TO INTERFACE MODULE PROCESSOR UNIT	
0SLCT1P	I	SLCT1P	151		TO INTERFACE MODULE PROCESSOR UNIT	
0SRVRQ00	I	SRV000	017		2/1 TO CONN CKT	
0SRVRQ01	I	SRV001	117		2/2 TO CONN CKT	
0SRVRQ02	I	SRV002	018		2/3 TO CONN CKT	
0SRVRQ03	I	SRV003	118		2/4 TO CONN CKT	
0SRVRQ04	I	SRV004	019		2/5 TO CONN CKT	
0SRVRQ05	I	SRV005	119		2/6 TO CONN CKT	
0SRVRQ06	I	SRV006	020		2/7 TO CONN CKT	
0SRVRQ07	I	SRV007	120		2/8 TO CONN CKT	
0SRVRQ08	I	SRV008	040		TO CONN CKT	
0SRVRQ09	I	SRV009	140		TO CONN CKT	
0SRVRQ10	I	SRV010	041		TO CONN CKT	
0SRVRQ11	I	SRV011	141		TO CONN CKT	
0SRVRQ12	I	SRV012	042		TO CONN CKT	
0SRVRQ13	I	SRV013	142		TO CONN CKT	
0SRVRQ14	I	SRV014	043		TO CONN CKT	
0SRVRQ15	I	SRV015	143		TO CONN CKT	
0SRVRQ16	I	SRV016	217		TO CONN CKT	
0SRVRQ17	I	SRV017	317		TO CONN CKT	
0SRVRQ18	I	SRV018	218		TO CONN CKT	
0SRVRQ19	I	SRV019	318		TO CONN CKT	
0SRVRQ20	I	SRV020	219		TO CONN CKT	
0SRVRQ21	I	SRV021	319		TO CONN CKT	
0SRVRQ22	I	SRV022	220		TO CONN CKT	
0SRVRQ23	I	SRV023	320		TO CONN CKT	
0SRVRQ24	I	SRV024	240		TO CONN CKT	
0SRVRQ25	I	SRV025	340		TO CONN CKT	
0SRVRQ26	I	SRV026	241		TO CONN CKT	
0SRVRQ27	I	SRV027	341		TO CONN CKT	
0SRVRQ28	I	SRV028	242		TO CONN CKT	
0SRVRQ29	I	SRV029	342		TO CONN CKT	
0SRVRQ30	I	SRV030	243		TO CONN CKT	
0SRVRQ31	I	SRV031	343		TO CONN CKT	
0WRITE0	O	W000	015		2/1,2/2 2/3,2/4 2/5,2/6 2/7,2/8 3/1	
0WRITE1	O	W010	038		TO CONN CKT	
0WRITE2	O	W020	215		TO CONN CKT	

SYMBOL NO. 1 (CONT)

MSU COMMON PACK

DESIG	EQPT LOC	CODE	ELEM IDENT	OPT
0COMM	04-018	TN879	A	

LEAD DESIG	FUNC	TERM. MOD	TERM.	TERM. OPT	DESTINATION	NOTE
0WRITE3	O	W030	238		TO CONN CKT	

PART OF FS 1

SYMBOL(S) 1

COPYRIGHT (C) 1988 AT&T
ALL RIGHTS RESERVED

MODULAR METALLIC SERVICE UNIT

DWG SIZE: D

ISSUE: 5A

AT&T | SD-5D015-01 | B1CB

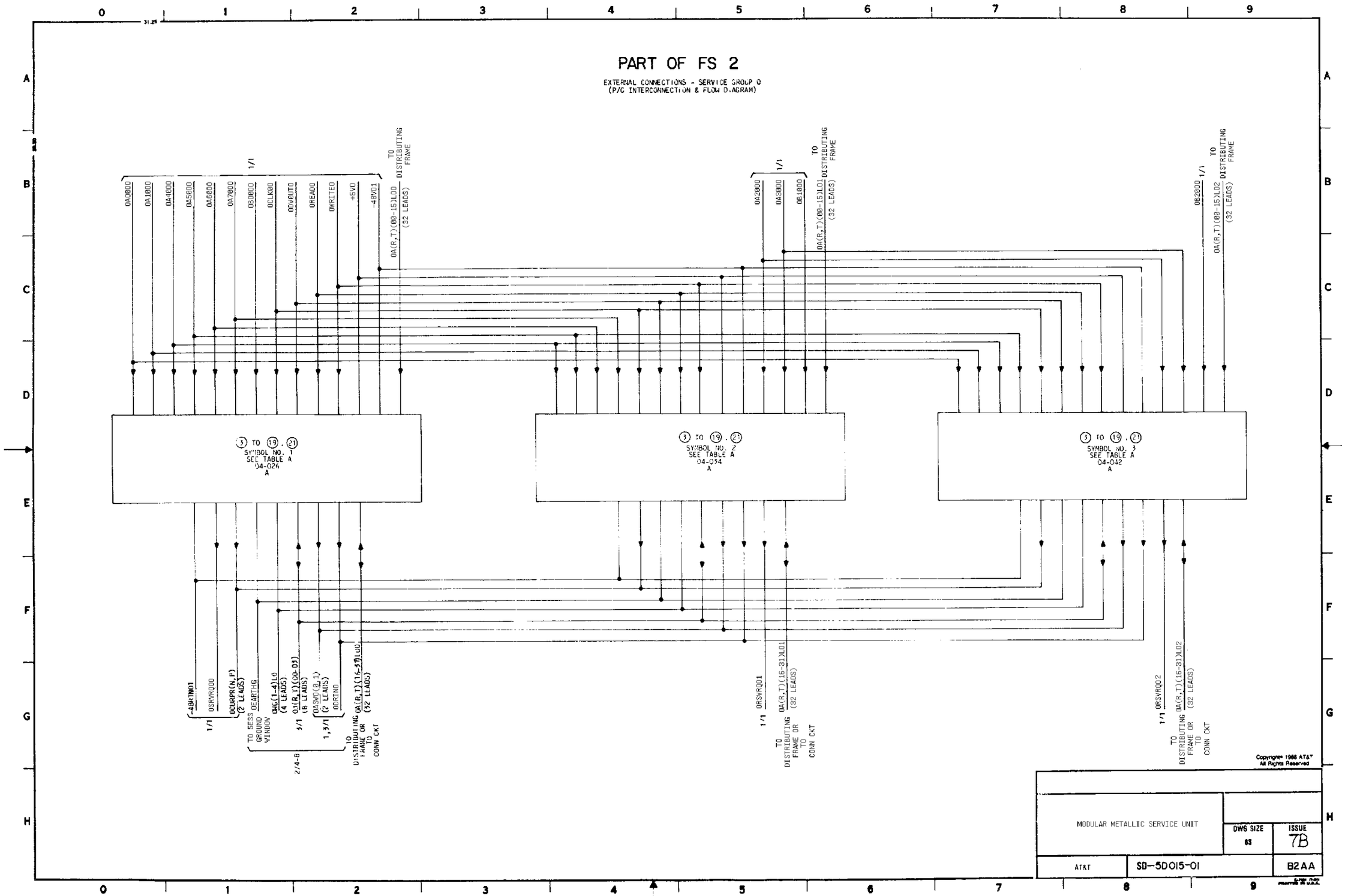
PART OF FS 2
EXTERNAL CONNECTIONS - SERVICE GROUP 0
(P/C INTERCONNECTION & FLOW DIAGRAM)
0A0000
0A1000
0A4000
0A5000
0A6000
0A7000
0B0000
0CLK00
0DV0UT0
0READ0
0WRITE0
+5V0
-48V01
1/1
TO DISTRIBUTING FRAME
0A(R,T)(00-15)L00 (32 LEADS)
0A2000
0A3000
0B1000
0A(R,T)(00-15)L01 (32 LEADS)
0B2000
0A(R,T)(00-15)L02 (32 LEADS)
3 TO 19, 21
SYMBOL NO. 1
SEE TABLE A
04-026
A
SYMBOL NO. 2
SEE TABLE A
04-034
A
SYMBOL NO. 3
SEE TABLE A
04-042
A
-48RTN01
0SRVRQ00
0CURPR(N,P) (2 LEADS)
TO SESS GROUND WINDOW
0EARTHG
0WG(1-4)L0 (4 LEADS)
0A(R,T)(00-03) (8 LEADS)
0ASW0(0,1) (2 LEADS)
0DRIN0
2/4-8
1,3/1
TO DISTRIBUTING FRAME OR TO CONN CKT
0A(R,T)(16-31)L00 (32 LEADS)
0RSVRQ01
0A(R,T)(16-31)L01 (32 LEADS)
0RSVRQ02
0A(R,T)(16-31)L02 (32 LEADS)
Copyright 1988 AT&T
All Rights Reserved
MODULAR METALLIC SERVICE UNIT
DWG SIZE
03
ISSUE
7B
AT&T
SD-5D015-01
B2AA

PART OF FS 2

EXTERNAL CONNECTIONS - SERVICE GROUP 0
(P/O INTERCONNECTION & FLOW DIAGRAM)

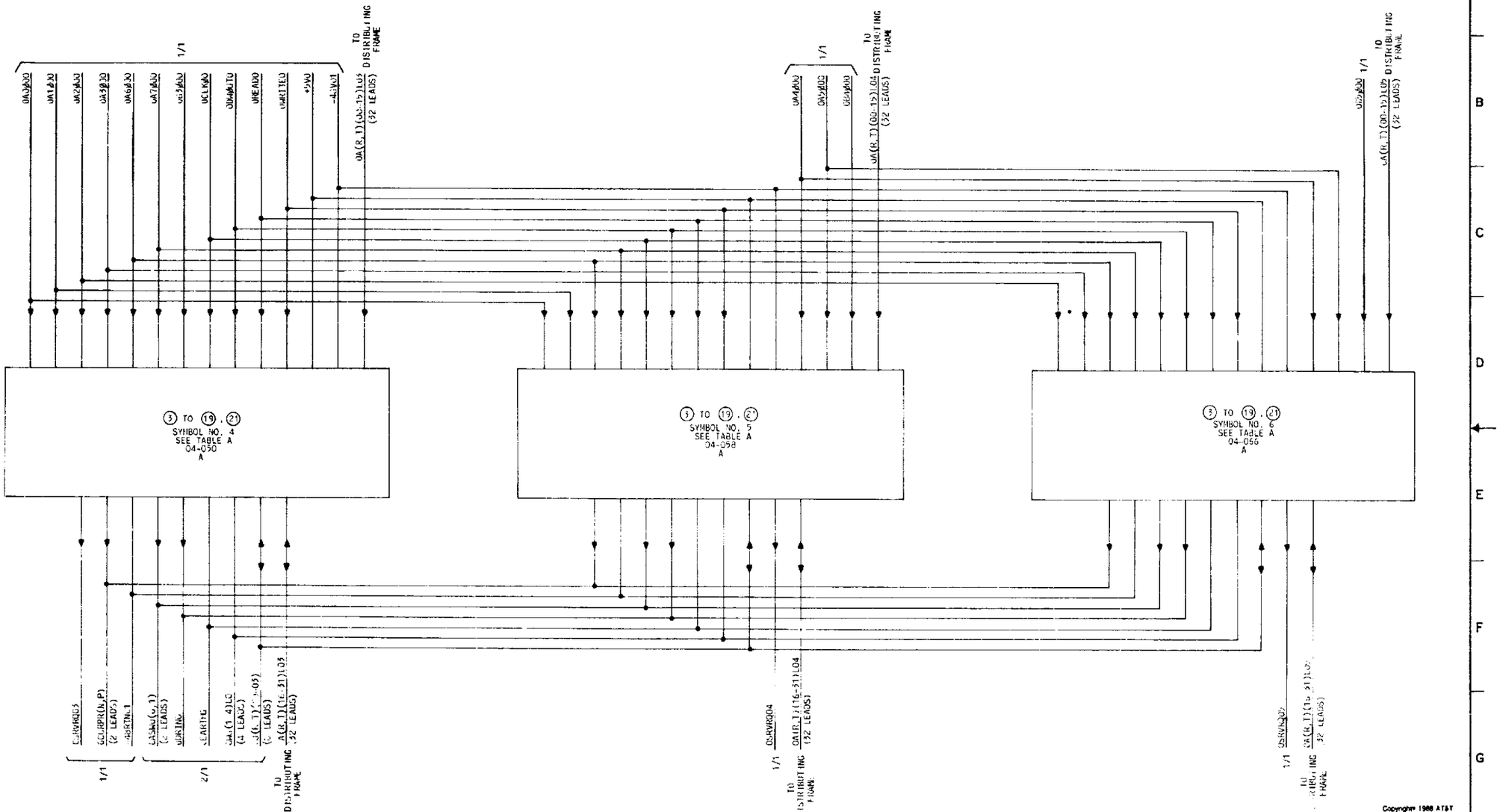

Copyright 1988 AT&T
All Rights Reserved

MODULAR METALLIC SERVICE UNIT		DWG SIZE 8S	ISSUE 7B
AT&T	SD-50015-01		B2AB

PART OF FS 2

EXTERNAL CONNECTIONS - SERVICE GROUP 0
(P/O INTERCONNECTION & FLOW DIAGRAM)

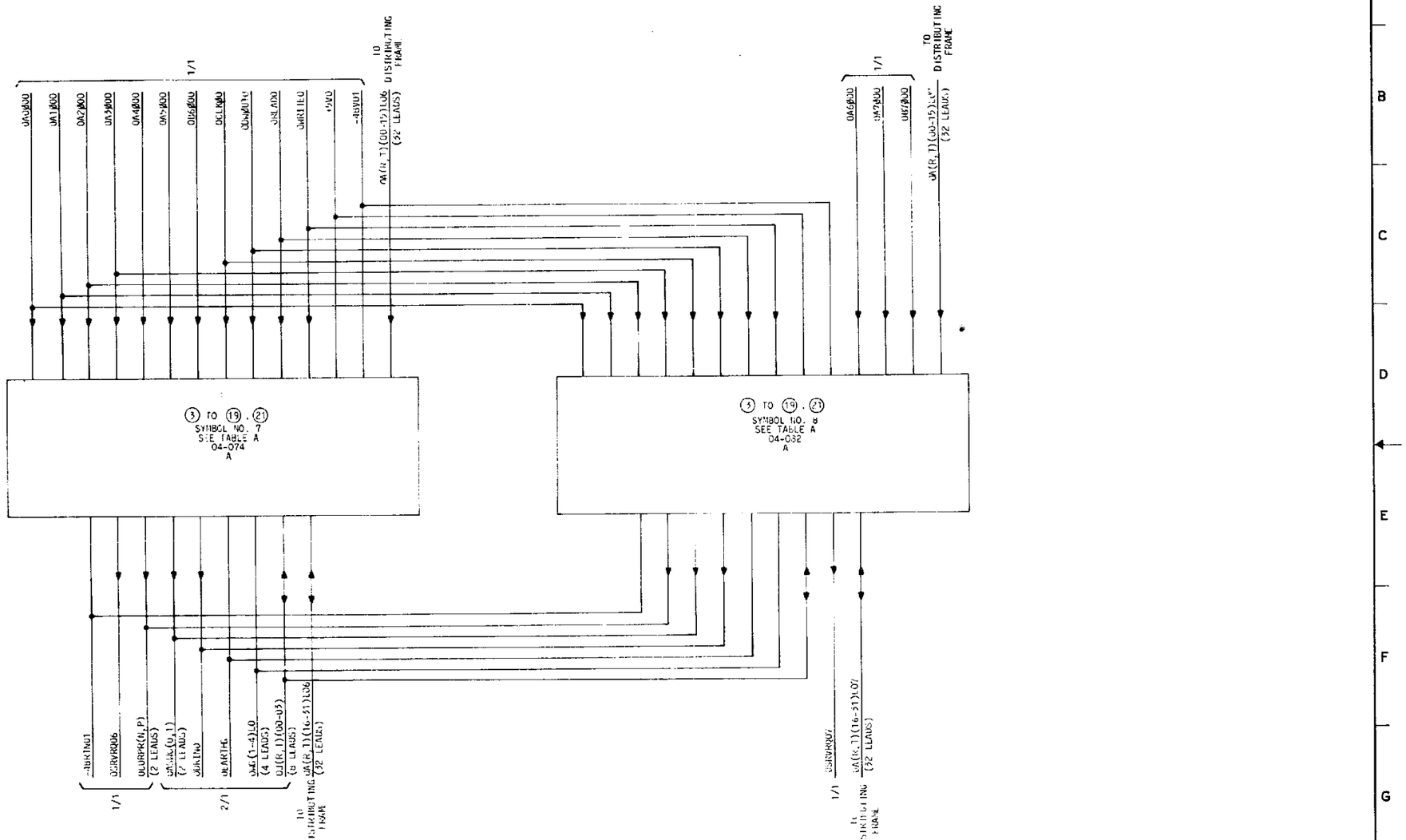

Copyright 1988 AT&T
All Rights Reserved

		DWG SIZE	ISSUE
		6S	7B
AT&T	SD-5D015-01		B2 AC

PART OF FS 2

EXTERNAL CONNECTIONS - SERVICE GROUP 0
(P/O INTERCONNECTION & FLOW DIAGRAM)

TABLE A

OPT. (APP FIG. NO.)	COMPCODE	SYMBOL NO. 1 04-026	SYMBOL NO. 2 04-034	SYMBOL NO. 3 04-042	SYMBOL NO. 4 04-050	SYMBOL NO. 5 04-058	SYMBOL NO. 6 04-066	SYMBOL NO. 7 04-074	SYMBOL NO. 8 04-082
		DESIG	DESIG	DESIG	DESIG	DESIG	DESIG	DESIG	DESIG
3	TN138	OACC0	OACC1	OACC2	OACC3	OACC4	OACC5	OACC6	OACC7
4	TN220B	OSCAN0	OSCAN1	OSCAN2	OSCAN3	OSCAN4	OSCAN5	OSCAN6	OSCAN7
5	TN221	OSD0	OSD1	OSD2	OSD3	OSD4	OSD5	OSD6	OSD7
6	TN328	OALITH0	OALITH1	OALITH2	OALITH3	OALITH4	OALITH5	OALITH6	OALITH7
7	TN329	OALITM0	OALITM1	OALITM2	OALITM3	OALITM4	OALITM5	OALITM6	OALITM7
8	TN330	OALITL0	OALITL1	OALITL2	OALITL3	OALITL4	OALITL5	OALITL6	OALITL7
9	TN880	OGDX0	OGDX1	OGDX2	OGDX3	OGDX4	OGDX5	OGDX6	OGDX7
10	TN1040	ODFTAC0	ODFTAC1	ODFTAC2	ODFTAC3	ODFTAC4	ODFTAC5	ODFTAC6	ODFTAC7
11	TN1538	OALITOXH0	OALITOXH1	OALITOXH2	OALITOXH3	OALITOXH4	OALITOXH5	OALITOXH6	OALITOXH7
12	TN1539	OALITOXM0	OALITOXM1	OALITOXM2	OALITOXM3	OALITOXM4	OALITOXM5	OALITOXM6	OALITOXM7
13	TN1540	OALITOXL0	OALITOXL1	OALITOXL2	OALITOXL3	OALITOXL4	OALITOXL5	OALITOXL6	OALITOXL7
14	TN1613	OALIT1XH0	OALIT1XH1	OALIT1XH2	OALIT1XH3	OALIT1XH4	OALIT1XH5	OALIT1XH6	OALIT1XH7
15	TN1614	OALIT1XM0	OALIT1XM1	OALIT1XM2	OALIT1XM3	OALIT1XM4	OALIT1XM5	OALIT1XM6	OALIT1XM7
16	TN1615	OALIT1XL0	OALIT1XL1	OALIT1XL2	OALIT1XL3	OALIT1XL4	OALIT1XL5	OALIT1XL6	OALIT1XL7
17	TN328B	OALITH0	OALITH1	OALITH2	OALITH3	OALITH4	OALITH5	OALITH6	OALITH7
18	TN329B	OALITM0	OALITM1	OALITM2	OALITM3	OALITM4	OALITM5	OALITM6	OALITM7
19	TN330B	OALITL0	OALITL1	OALITL2	OALITL3	OALITL4	OALITL5	OALITL6	OALITL7
21	TN1636	OALITT0	OALITT1	OALITT2	OALITT3	OALITT4	OALITT5	OALITT6	OALITT7

Copyright© 1988 AT&T
All Rights Reserved

MODULAR METALLIC SERVICE UNIT

DWG SIZE 6S

ISSUE 7B

AT&T SD-5D015-01

SHEET B2AD

PART OF FS 2

EXTERNAL CONNECTIONS - SERVICE GROUP 0

SYMBOL NO. 1

SEE NOTE 1

DESIG	EQPT LOC	CODE	ELEM IDENT	OPT
	04-026	SEE TABLE A	A	

LEAD DESIG	FUNC	TERM. MOD	TERM.	TERM. OPT	DESTINATION	NOTE
NC	I		013			312
	I		014			312
	I		015			312
	I		036			312
	I		037			312
	I		038			312
	I		039			312
	I		040			312
	I		041			312
	I		042			312
	I		043			312
	I		113			312
	I		114			312
	I		115			312
	I		116			312
	I		117			312
	I		118			312
	I		119			312
	I		213			312
	I		214			312
	I		215			312
	I		216			312
	I		217			312
	I		218			312
	I		219			312
	I		220			312
	I		236			312
	I		237			312
	I		238			312
	I		239			312
	I		240			312
	I		241			312
	I		242			312
	I		243			312
	I		354			312
+5V0	IO		034	1/1		312
	IO		035	1/1		312
	IO		134	1/1		312
	IO		135	1/1		312
-48RTN01	IO		200	1/1		312
	IO		201	1/1		312
	IO		300	1/1		312
	IO		301	1/1		312
-48V01	IO		000	1/1		312
	IO		001	1/1		312
	IO		100	1/1		312
	IO		101	1/1		312
GRD04J26	IO		021			312
	IO		032			312
	IO		121			312
	IO		221			312
	IO		224			312
	IO		232			312
	IO		234			312
	IO		235			312
	IO		321			312
	IO		324			312
	IO		332			312
	IO		334			312
	IO		335			312

SYMBOL NO. 1 (CONT)

SEE NOTE 1

DESIG	EQPT LOC	CODE	ELEM IDENT	OPT
	04-026	SEE TABLE A	A	

LEAD DESIG	FUNC	TERM. MOD	TERM.	TERM. OPT	DESTINATION	NOTE
0AR00L00	IO		004		TO DISTRIBUTING FRAME	312
0AR01L00	IO		005		TO DISTRIBUTING FRAME	312
0AR02L00	IO		006		TO DISTRIBUTING FRAME	312
0AR03L00	IO		007		TO DISTRIBUTING FRAME	312
0AR04L00	IO		008		TO DISTRIBUTING FRAME	312
0AR05L00	IO		009		TO DISTRIBUTING FRAME	312
0AR06L00	IO		010		TO DISTRIBUTING FRAME	312
0AR07L00	IO		011		TO DISTRIBUTING FRAME	312
0AR08L00	IO		045		TO DISTRIBUTING FRAME	312
0AR09L00	IO		046		TO DISTRIBUTING FRAME	312
0AR10L00	IO		047		TO DISTRIBUTING FRAME	312
0AR11L00	IO		048		TO DISTRIBUTING FRAME	312
0AR12L00	IO		049		TO DISTRIBUTING FRAME	312
0AR13L00	IO		050		TO DISTRIBUTING FRAME	312
0AR14L00	IO		051		TO DISTRIBUTING FRAME	312
0AR15L00	IO		052		TO DISTRIBUTING FRAME	312
0AR16L00	IO		204		TO DISTRIBUTING FRAME OR TO CONN CKT	312
0AR17L00	IO		205		TO DISTRIBUTING FRAME OR TO CONN CKT	312
0AR18L00	IO		206		TO DISTRIBUTING FRAME OR TO CONN CKT	312
0AR19L00	IO		207		TO DISTRIBUTING FRAME OR TO CONN CKT	312
0AR20L00	IO		208		TO DISTRIBUTING FRAME OR TO CONN CKT	312
0AR21L00	IO		209		TO DISTRIBUTING FRAME OR TO CONN CKT	312
0AR22L00	IO		210		TO DISTRIBUTING FRAME OR TO CONN CKT	312
0AR23L00	IO		211		TO DISTRIBUTING FRAME OR TO CONN CKT	312
0AR24L00	IO		245		TO DISTRIBUTING FRAME OR TO CONN CKT	312
0AR25L00	IO		246		TO DISTRIBUTING FRAME OR TO CONN CKT	312
0AR26L00	IO		247		TO DISTRIBUTING FRAME OR TO CONN CKT	312
0AP27L00	IO		248		TO DISTRIBUTING FRAME OR TO CONN CKT	312
0AR28L00	IO		249		TO DISTRIBUTING FRAME OR TO CONN CKT	312
0AR29L00	IO		250		TO DISTRIBUTING FRAME OR	312

SYMBOL NO. 1 (CONT)

SEE NOTE 1

DESIG	EQPT LOC	CODE	ELEM IDENT	OPT
	04-026	SEE TABLE A	A	

LEAD DESIG	FUNC	TERM. MOD	TERM.	TERM. OPT	DESTINATION	NOTE
					TO CONN CKT	
0AR30L00	IO		251		TO DISTRIBUTING FRAME OR TO CONN CKT	312
0AR31L00	IO		252		TO DISTRIBUTING FRAME OR TO CONN CKT	108,312
0ASW00	IO		222		3/1	312
0ASW01	IO		322		3/1	312
0AT00L00	IO		104		TO DISTRIBUTING FRAME	312
0AT01L00	IO		105		TO DISTRIBUTING FRAME	312
0AT02L00	IO		106		TO DISTRIBUTING FRAME	312
0AT03L00	IO		107		TO DISTRIBUTING FRAME	312
0AT04L00	IO		108		TO DISTRIBUTING FRAME	312
0AT05L00	IO		109		TO DISTRIBUTING FRAME	312
0AT06L00	IO		110		TO DISTRIBUTING FRAME	312
0AT07L00	IO		111		TO DISTRIBUTING FRAME	312
0AT08L00	IO		145		TO DISTRIBUTING FRAME	312
0AT09L00	IO		146		TO DISTRIBUTING FRAME	312
0AT10L00	IO		147		TO DISTRIBUTING FRAME	312
0AT11L00	IO		148		TO DISTRIBUTING FRAME	312
0AT12L00	IO		149		TO DISTRIBUTING FRAME	312
0AT13L00	IO		150		TO DISTRIBUTING FRAME	312
0AT14L00	IO		151		TO DISTRIBUTING FRAME	312
0AT15L00	IO		152		TO DISTRIBUTING FRAME	312
0AT16L00	IO		304		TO DISTRIBUTING FRAME OR TO CONN CKT	312
0AT17L00	IO		305		TO DISTRIBUTING FRAME OR TO CONN CKT	312
0AT18L00	IO		306		TO DISTRIBUTING FRAME OR TO CONN CKT	312
0AT19L00	IO		307		TO DISTRIBUTING FRAME OR TO CONN CKT	312
0AT20L00	IO		308		TO DISTRIBUTING FRAME OR TO CONN CKT	312
0AT21L00	IO		309		TO DISTRIBUTING FRAME OR TO CONN CKT	312
0AT22L00	IO		310		TO DISTRIBUTING FRAME OR TO CONN CKT	312
0AT23L00	IO		311		TO DISTRIBUTING FRAME OR TO CONN CKT	312
0AT24L00	IO		345		TO DISTRIBUTING FRAME OR TO CONN CKT	312
0AT25L00	IO		346		TO DISTRIBUTING FRAME OR TO CONN CKT	312

SYMBOL NO. 1 (CONT)

SEE NOTE 1

DESIG	EQPT LOC	CODE	ELEM IDENT	OPT
	04-026	SEE TABLE A	A	

LEAD DESIG	FUNC	TERM. MOD	TERM.	TERM. OPT	DESTINATION	NOTE
0AT26L00	IO		347		TO DISTRIBUTING FRAME OR TO CONN CKT	312
0AT27L00	IO		348		TO DISTRIBUTING FRAME OR TO CONN CKT	312
0AT28L00	IO		349		TO DISTRIBUTING FRAME OR TO CONN CKT	312
0AT29L00	IO		350		TO DISTRIBUTING FRAME OR TO CONN CKT	312
0AT30L00	IO		351		TO DISTRIBUTING FRAME OR TO CONN CKT	312
0AT31L00	IO		352		TO DISTRIBUTING FRAME OR TO CONN CKT	108,312
0A0000	IO		024		1/1	312
0A1000	IO		124		1/1	312
0A4000	IO		022		1/1	312
0A5000	IO		122		1/1	312
0A6000	IO		023		1/1	312
0A7000	IO		123		1/1	312
0B0000	IO		054		1/1	312
	IO		154		1/1	312
	IO		254		1/1	312
0CLK00	IO		333		1/1	312
0CURPRN	IO		012		1/1	312
0CURPRP	IO		112		1/1	312
0DRIN0	IO		323		3/1	312
0DWOUT0	IO		233		1/1	312
0EARTHG	IO		156		2/1	312
	IO		256		2/1 TO SESS GROUND WINDOW	312
	IO		356		2/1	312
	IO		056		2/2,2/3 2/4,2/5 2/6,2/7 2/8	312
0JR00	IO		202		2/2,2/3 2/4,2/5 2/6,2/7 2/8,3/1	312
0JR01	IO		203		2/2,2/3 2/4,2/5 2/6,2/7 2/8,3/1	312
0JR02	IO		044		2/2,2/3 2/4,2/5 2/6,2/7 2/8,3/1	312
0JR03	IO		244		2/2,2/3 2/4,2/5 2/6,2/7 2/8,3/1	312

PART OF FS 2

SYMBOL(S) 1

COPYRIGHT (c) 1988 AT&T
ALL RIGHTS RESERVED

MODULAR METALLIC SERVICE UNIT

DWG SIZE	ISSUE
D	7B

AT&T	SD-5D015-01	B2CA

PART OF FS 2

EXTERNAL CONNECTIONS - SERVICE GROUP 0

SYMBOL NO. 1 (CONT)

SEE NOTE 1

DESIG	EQPT LOC	CODE	ELEM IDENT	OPT
	04-026	SEE TABLE A	A	

LEAD DESIG	FUNC	TERM. MOD	TERM.	TERM. OPT	DESTINATION	NOTE
0JT00	IO		302		2/2,2/3 2/4,2/5 2/6,2/7 2/8,3/1	312
0JT01	IO		303		2/2,2/3 2/4,2/5 2/6,2/7 2/8,3/1	312
0JT02	IO		144		2/2,2/3 2/4,2/5 2/6,2/7 2/8,3/1	312
0JT03	IO		344		2/2,2/3 2/4,2/5 2/6,2/7 2/8,3/1	312
0READ0	IO		133		1/1	312
0SRVRG00	IO		223		1/1	312
0WG1L0	IO		053		2/1	312
	IO		055		2/2,2/3 2/4,2/5 2/6,2/7 2/8	312
0WG2L0	IO		155		2/1	312
	IO		153		2/2,2/3 2/4,2/5 2/6,2/7 2/8	312
0WG3L0	IO		253		2/1	312
	IO		255		2/2,2/3 2/4,2/5 2/6,2/7 2/8	312
0WG4L0	IO		355		2/1	312
	IO		353		2/2,2/3 2/4,2/5 2/6,2/7 2/8	312
0WRITE0	IO		033		1/1	312

NOTE(S):

1. THE FOLLOWING ARE THE TITLES OF RESPECTIVE CIRCUIT PACK

   TN138 - METALLIC ACCESS BOARD
   TN220B - MSU SCAN PACK
   TN221 - SIGNAL DISTRIBUTE PACK
   TN328 - AUTOMATIC LINE INSULATION TEST - HIGH HUMIDITY
   TN329 - AUTOMATIC LINE INSULATION TEST - MID HUMIDITY
   TN330 - AUTOMATIC LINE INSULATION TEST - LOW HUMIDITY
   TN880 - CDX COMPENSATOR
   TN1040 - DISTRIBUTING FRAME TEST ACCESS CIRCUIT
   TN1538 - AUTOMATIC LINE INSULATION TEST - HIGH HUMIDITY
   TN1539 - AUTOMATIC LINE INSULATION TEST - MID HUMIDITY
   TN1540 - AUTOMATIC LINE INSULATION TEST - LOW HUMIDITY
   TN1613 - AUTOMATIC LINE INSULATION TEST - HIGH HUMIDITY
   TN1614 - AUTOMATIC LINE INSULATION TEST - MID HUMIDITY
   TN1615 - AUTOMATIC LINE INSULATION TEST - LOW HUMIDITY
   TN328B - AUTOMATIC LINE INSULATION TEST - HIGH HUMIDITY
   TN329B - AUTOMATIC LINE INSULATION TEST - MID HUMIDITY
   TN330B - AUTOMATIC LINE INSULATION TEST - LOW HUMIDITY
   TN1636 - AUTOMATIC LINE INSULATION TEST - VERY HIGH HUMIDITY

SYMBOL NO. 2

SEE NOTE 1

DESIG	EQPT LOC	CODE	ELEM IDENT	OPT
	04-034	SEE TABLE A	A	

LEAD DESIG	FUNC	TERM. MOD	TERM.	TERM. OPT	DESTINATION	NOTE
NC	I		013			312
	I		014			312
	I		015			312
	I		036			312
	I		037			312
	I		038			312
	I		039			312
	I		040			312
	I		041			312
	I		042			312
	I		043			312
	I		113			312
	I		114			312
	I		115			312
	I		116			312
	I		117			312
	I		118			312
	I		119			312
	I		213			312
	I		214			312
	I		215			312
	I		216			312
	I		217			312
	I		218			312
	I		219			312
	I		220			312
	I		236			312
	I		237			312
	I		238			312
	I		239			312
	I		240			312
	I		241			312
	I		242			312
	I		243			312
	I		354			312
+5V0	IO		034	1/1		312
	IO		035	1/1		312
	IO		134	1/1		312
	IO		135	1/1		312
-48RTN01	IO		200	1/1		312
	IO		201	1/1		312
	IO		300	1/1		312
	IO		301	1/1		312
-48V01	IO		000	1/1		312
	IO		001	1/1		312
	IO		100	1/1		312
	IO		101	1/1		312
GRD04034	IO		021			312
	IO		032			312
	IO		121			312
	IO		221			312
	IO		224			312
	IO		232			312
	IO		234			312
	IO		235			312
	IO		321			312
	IO		324			312
	IO		332			312
	IO		334			312
	IO		335			312

SYMBOL NO. 2 (CONT)

SEE NOTE 1

DESIG	EQPT LOC	CODE	ELEM IDENT	OPT
	04-034	SEE TABLE A	A	

LEAD DESIG	FUNC	TERM. MOD	TERM.	TERM. OPT	DESTINATION	NOTE
0AR00L01	IO		004		TO DISTRIBUTING FRAME	312
0AR01L01	IO		005		TO DISTRIBUTING FRAME	312
0AR02L01	IO		006		TO DISTRIBUTING FRAME	312
0AR03L01	IO		007		TO DISTRIBUTING FRAME	312
0AR04L01	IO		008		TO DISTRIBUTING FRAME	312
0AR05L01	IO		009		TO DISTRIBUTING FRAME	312
0AR06L01	IO		010		TO DISTRIBUTING FRAME	312
0AR07L01	IO		011		TO DISTRIBUTING FRAME	312
0AR08L01	IO		045		TO DISTRIBUTING FRAME	312
0AR09L01	IO		046		TO DISTRIBUTING FRAME	312
0AR10L01	IO		047		TO DISTRIBUTING FRAME	312
0AR11L01	IO		048		TO DISTRIBUTING FRAME	312
0AR12L01	IO		049		TO DISTRIBUTING FRAME	312
0AR13L01	IO		050		TO DISTRIBUTING FRAME	312
0AR14L01	IO		051		TO DISTRIBUTING FRAME	312
0AR15L01	IO		052		TO DISTRIBUTING FRAME	312
0AR16L01	IO		Z04		TO DISTRIBUTING FRAME OR TO CONN CKT	312
0AR17L01	IO		Z05		TO DISTRIBUTING FRAME OR TO CONN CKT	312
0AR18L01	IO		Z06		TO DISTRIBUTING FRAME OR TO CONN CKT	312
0AR19L01	IO		Z07		TO DISTRIBUTING FRAME OR TO CONN CKT	312
0AR20L01	IO		Z08		TO DISTRIBUTING FRAME OR TO CONN CKT	312
0AR21L01	IO		Z09		TO DISTRIBUTING FRAME OR TO CONN CKT	312
0AR22L01	IO		Z10		TO DISTRIBUTING FRAME OR TO CONN CKT	312
0AR23L01	IO		Z11		TO DISTRIBUTING FRAME OR TO CONN CKT	312
0AR24L01	IO		Z45		TO DISTRIBUTING FRAME OR TO CONN CKT	312
0AR25L01	IO		Z46		TO DISTRIBUTING FRAME OR TO CONN CKT	312
0AR26L01	IO		Z47		TO DISTRIBUTING FRAME OR TO CONN CKT	312
0AR27L01	IO		Z48		TO DISTRIBUTING FRAME OR TO CONN CKT	312
0AR28L01	IO		Z49		TO DISTRIBUTING FRAME OR TO CONN CKT	312
0AR29L01	IO		Z50		TO DISTRIBUTING FRAME OR TO CONN CKT	312

SYMBOL NO. 2 (CONT)

SEE NOTE 1

DESIG	EQPT LOC	CODE	ELEM IDENT	OPT
	04-034	SEE TABLE A	A	

LEAD DESIG	FUNC	TERM. MOD	TERM.	TERM. OPT	DESTINATION	NOTE
					TO CONN CKT	
0AR30L01	IO		251		TO DISTRIBUTING FRAME OR TO CONN CKT	312
0AR31L01	IO		252		TO DISTRIBUTING FRAME OR TO CONN CKT	108,312
0ASW00	IO		222		3/1	312
0ASW01	IO		322		3/1	312
0AT00L01	IO		104		TO DISTRIBUTING FRAME	312
0AT01L01	IO		105		TO DISTRIBUTING FRAME	312
0AT02L01	IO		106		TO DISTRIBUTING FRAME	312
0AT03L01	IO		107		TO DISTRIBUTING FRAME	312
0AT04L01	IO		108		TO DISTRIBUTING FRAME	312
0AT05L01	IO		109		TO DISTRIBUTING FRAME	312
0AT06L01	IO		110		TO DISTRIBUTING FRAME	312
0AT07L01	IO		111		TO DISTRIBUTING FRAME	312
0AT08L01	IO		145		TO DISTRIBUTING FRAME	312
0AT09L01	IO		146		TO DISTRIBUTING FRAME	312
0AT10L01	IO		147		TO DISTRIBUTING FRAME	312
0AT11L01	IO		148		TO DISTRIBUTING FRAME	312
0AT12L01	IO		149		TO DISTRIBUTING FRAME	312
0AT13L01	IO		150		TO DISTRIBUTING FRAME	312
0AT14L01	IO		151		TO DISTRIBUTING FRAME	312
0AT15L01	IO		152		TO DISTRIBUTING FRAME	312
0AT16L01	IO		304		TO DISTRIBUTING FRAME OR TO CONN CKT	312
0AT17L01	IO		305		TO DISTRIBUTING FRAME OR TO CONN CKT	312
0AT18L01	IO		306		TO DISTRIBUTING FRAME OR TO CONN CKT	312
0AT19L01	IO		307		TO DISTRIBUTING FRAME OR TO CONN CKT	312
0AT20L01	IO		308		TO DISTRIBUTING FRAME OR TO CONN CKT	312
0AT21L01	IO		309		TO DISTRIBUTING	312

PART OF FS 2
SYMBOL(S) 1 2

COPYRIGHT (C) 1988 AT&T
ALL RIGHTS RESERVED

MODULAR METALLIC SERVICE UNIT

DWG SIZE	ISSUE
D2	7B

AT&T	SD-5D015-01	B2CB

PART OF FS 2

EXTERNAL CONNECTIONS - SERVICE GROUP 0

SYMBOL NO. 2 (CONT)

SEE NOTE 1

DESIG	EQPT LOC	CODE	ELEM IDENT	OPT
	04-034	SEE TABLE A	A	

LEAD DESIG	FUNC	TERM. MOD	TERM.	TERM. OPT	DESTINATION	NOTE
0AT22L01	IO		310		FRAME OR TO CONN CKT TO DISTRIBUTING FRAME OR TO CONN CKT	312
0AT23L01	IO		311		TO DISTRIBUTING FRAME OR TO CONN CKT	312
0AT24L01	IO		345		TO DISTRIBUTING FRAME OR TO CONN CKT	312
0AT25L01	IO		346		TO DISTRIBUTING FRAME OR TO CONN CKT	312
0AT26L01	IO		347		TO DISTRIBUTING FRAME OR TO CONN CKT	312
0AT27L01	IO		348		TO DISTRIBUTING FRAME OR TO CONN CKT	312
0AT28L01	IO		349		TO DISTRIBUTING FRAME OR TO CONN CKT	312
0AT29L01	IO		350		TO DISTRIBUTING FRAME OR TO CONN CKT	312
0AT30L01	IO		351		TO DISTRIBUTING FRAME OR TO CONN CKT	312
0AT31L01	IO		352		TO DISTRIBUTING FRAME OR TO CONN CKT	108,312
0AZ000	IO		022	1/1		312
0A3000	IO		122	1/1		312
0A4000	IO		023	1/1		312
0A5000	IO		123	1/1		312
0A6000	IO		024	1/1		312
0A7000	IO		124	1/1		312
0B1000	IO		054	1/1		312
	IO		154	1/1		312
	IO		254	1/1		312
0CLK00	IO		333	1/1		312
0CURPRN	IO		012	1/1		312
0CURPRP	IO		112	1/1		312
0DR1N0	IO		323	3/1		312
0DW0UT0	IO		233	1/1		312
0EARTHG	IO		056	2/1		312
	IO		156	2/1		312
	IO		256	2/1		312
	IO		356	2/1		312
0JR00	IO		202	2/1		312
0JR01	IO		203	2/1		312
0JR02	IO		044	2/1		312
0JR03	IO		244	2/1		312
0JT00	IO		302	2/1		312
0JT01	IO		303	2/1		312
0JT02	IO		144	2/1		312
0JT03	IO		344	2/1		312
0READ0	IO		133	1/1		312
0SRVR001	IO		223	1/1		312
0WG1L0	IO		053	2/1		312
	IO		055	2/1		312
0WG2L0	IO		153	2/1		312
	IO		155	2/1		312
0WG3L0	IO		253	2/1		312

SYMBOL NO. 2 (CONT)

SEE NOTE 1

DESIG	EQPT LOC	CODE	ELEM IDENT	OPT
	04-034	SEE TABLE A	A	

LEAD DESIG	FUNC	TERM. MOD	TERM.	TERM. OPT	DESTINATION	NOTE
	IO		255		2/1	312
0WG4L0	IO		353		2/1	312
	IO		355		2/1	312
0WRITE0	IO		033		1/1	312

NOTE(S):

1. THE FOLLOWING ARE THE TITLES OF RESPECTIVE CIRCUIT PACK

   TN138 - METALLIC ACCESS BOARD
   TN2208 - MSU SCAN PACK
   TN221 - SIGNAL DISTRIBUTE PACK
   TN328 - AUTOMATIC LINE INSULATION TEST - HIGH HUMIDITY
   TN329 - AUTOMATIC LINE INSULATION TEST - MID HUMIDITY
   TN330 - AUTOMATIC LINE INSULATION TEST - LOW HUMIDITY
   TN880 - GDX COMPENSATOR
   TN1040 - DISTRIBUTING FRAME TEST ACCESS CIRCUIT
   TN1538 - AUTOMATIC LINE INSULATION TEST - HIGH HUMIDITY
   TN1539 - AUTOMATIC LINE INSULATION TEST - MID HUMIDITY
   TN1540 - AUTOMATIC LINE INSULATION TEST - LOW HUMIDITY
   TN1613 - AUTOMATIC LINE INSULATION TEST - HIGH HUMIDITY
   TN1614 - AUTOMATIC LINE INSULATION TEST - MID HUMIDITY
   TN1615 - AUTOMATIC LINE INSULATION TEST - LOW HUMIDITY
   TN3288 - AUTOMATIC LINE INSULATION TEST - HIGH HUMIDITY
   TN3298 - AUTOMATIC LINE INSULATION TEST - MID HUMIDITY
   TN3308 - AUTOMATIC LINE INSULATION TEST - LOW HUMIDITY
   TN1636 - AUTOMATIC LINE INSULATION TEST - VERY HIGH HUMIDITY

SYMBOL NO. 3

SEE NOTE 1

DESIG	EQPT LOC	CODE	ELEM IDENT	OPT
	04-042	SEE TABLE A	A	

LEAD DESIG	FUNC	TERM. MOD	TERM.	TERM. OPT	DESTINATION	NOTE
NC	I		013			312
	I		014			312
	I		015			312
	I		036			312
	I		037			312
	I		038			312
	I		039			312
	I		040			312
	I		041			312
	I		042			312
	I		043			312
	I		113			312
	I		114			312
	I		115			312
	I		116			312
	I		117			312
	I		118			312
	I		119			312
	I		213			312
	I		214			312
	I		215			312
	I		216			312
	I		217			312
	I		218			312

SYMBOL NO. 3 (CONT)

SEE NOTE 1

DESIG	EQPT LOC	CODE	ELEM IDENT	OPT
	04-042	SEE TABLE A	A	

LEAD DESIG	FUNC	TERM. MOD	TERM.	TERM. OPT	DESTINATION	NOTE
	I		219			312
	I		220			312
	I		236			312
	I		237			312
	I		238			312
	I		239			312
	I		240			312
	I		241			312
	I		242			312
	I		243			312
	I		354			312
+5V0	IO		034		1/1	312
	IO		035		1/1	312
	IO		134		1/1	312
	IO		135		1/1	312
-48RTN01	IO		200		1/1	312
	IO		201		1/1	312
	IO		300		1/1	312
	IO		301		1/1	312
-48V01	IO		000		1/1	312
	IO		001		1/1	312
	IO		100		1/1	312
	IO		101		1/1	312
GRD04042	IO		021			312
	IO		032			312
	IO		121			312
	IO		221			312
	IO		224			312
	IO		232			312
	IO		234			312
	IO		235			312
	IO		321			312
	IO		324			312
	IO		332			312
	IO		334			312
	IO		335			312
0AR00L02	IO		004		TO DISTRIBUTING FRAME	312
0AR01L02	IO		005		TO DISTRIBUTING FRAME	312
0AR02L02	IO		006		TO DISTRIBUTING FRAME	312
0AR03L02	IO		007		TO DISTRIBUTING FRAME	312
0AR04L02	IO		008		TO DISTRIBUTING FRAME	312
0AR05L02	IO		009		TO DISTRIBUTING FRAME	312
0AR06L02	IO		010		TO DISTRIBUTING FRAME	312
0AR07L02	IO		011		TO DISTRIBUTING FRAME	312
0AR08L02	IO		045		TO DISTRIBUTING FRAME	312
0AR09L02	IO		046		TO DISTRIBUTING FRAME	312
0AR10L02	IO		047		TO DISTRIBUTING FRAME	312
0AR11L02	IO		048		TO DISTRIBUTING FRAME	312
0AR12L02	IO		049		TO DISTRIBUTING FRAME	312
0AR13L02	IO		050		TO DISTRIBUTING FRAME	312
0AR14L02	IO		051		TO DISTRIBUTING FRAME	312

SYMBOL NO. 3 (CONT)

SEE NOTE 1

DESIG	EQPT LOC	CODE	ELEM IDENT	OPT
	04-042	SEE TABLE A	A	

LEAD DESIG	FUNC	TERM. MOD	TERM.	TERM. OPT	DESTINATION	NOTE
0AR15L02	IO		052		TO DISTRIBUTING FRAME	312
0AR16L02	IO		204		TO DISTRIBUTING FRAME OR TO CONN CKT	312
0AR17L02	IO		205		TO DISTRIBUTING FRAME OR TO CONN CKT	312
0AR18L02	IO		206		TO DISTRIBUTING FRAME OR TO CONN CKT	312
0AR19L02	IO		207		TO DISTRIBUTING FRAME OR TO CONN CKT	312
0AR20L02	IO		208		TO DISTRIBUTING FRAME OR TO CONN CKT	312
0AR21L02	IO		209		TO DISTRIBUTING FRAME OR TO CONN CKT	312
0AR22L02	IO		210		TO DISTRIBUTING FRAME OR TO CONN CKT	312
0AR23L02	IO		211		TO DISTRIBUTING FRAME OR TO CONN CKT	312
0AR24L02	IO		245		TO DISTRIBUTING FRAME OR TO CONN CKT	312
0AR25L02	IO		246		TO DISTRIBUTING FRAME OR TO CONN CKT	312
0AR26L02	IO		247		TO DISTRIBUTING FRAME OR TO CONN CKT	312
0AR27L02	IO		248		TO DISTRIBUTING FRAME OR TO CONN CKT	312
0AR28L02	IO		249		TO DISTRIBUTING FRAME OR TO CONN CKT	312
0AR29L02	IO		250		TO DISTRIBUTING FRAME OR TO CONN CKT	312
0AR30L02	IO		251		TO DISTRIBUTING FRAME OR TO CONN CKT	312
0AR31L02	IO		252		TO DISTRIBUTING FRAME OR TO CONN CKT	108,312
0ASW00	IO		222		3/1	312
0ASW01	IO		322		3/1	312
0AT00L02	IO		104		TO DISTRIBUTING FRAME	312
0AT01L02	IO		105		TO DISTRIBUTING FRAME	312
0AT02L02	IO		106		TO DISTRIBUTING FRAME	312
0AT03L02	IO		107		TO DISTRIBUTING	312

PART OF FS 2
SYMBOL(S) 2 3

COPYRIGHT (c) 1988 AT&T
ALL RIGHTS RESERVED

MODULAR METALLIC SERVICE UNIT

DWG SIZE	ISSUE
Z	7B

AT&T	SD-50015-01	B2CC

PART OF FS 2

EXTERNAL CONNECTIONS - SERVICE GROUP 0

SYMBOL NO. 3 (CONT)

SEE NOTE 1

DESIG: — EQPT LOC: 04-042 — CODE: SEE TABLE A — ELEM IDENT: A — OPT:

LEAD DESIG	FUNC	TERM. MOD	TERM.	TERM. OPT	DESTINATION	NOTE
					FRAME	
0AT04L02	IO		108		TO DISTRIBUTING FRAME	312
0AT05L02	IO		109		TO DISTRIBUTING FRAME	312
0AT06L02	IO		110		TO DISTRIBUTING FRAME	312
0AT07L02	IO		111		TO DISTRIBUTING FRAME	312
0AT08L02	IO		145		TO DISTRIBUTING FRAME	312
0AT09L02	IO		146		TO DISTRIBUTING FRAME	312
0AT10L02	IO		147		TO DISTRIBUTING FRAME	312
0AT11L02	IO		148		TO DISTRIBUTING FRAME	312
0AT12L02	IO		149		TO DISTRIBUTING FRAME	312
0AT13L02	IO		150		TO DISTRIBUTING FRAME	312
0AT14L02	IO		151		TO DISTRIBUTING FRAME	312
0AT15L02	IO		152		TO DISTRIBUTING FRAME	312
0AT16L02	IO		304		TO DISTRIBUTING FRAME OR TO CONN CKT	312
0AT17L02	IO		305		TO DISTRIBUTING FRAME OR TO CONN CKT	312
0AT18L02	IO		306		TO DISTRIBUTING FRAME OR TO CONN CKT	312
0AT19L02	IO		307		TO DISTRIBUTING FRAME OR TO CONN CKT	312
0AT20L02	IO		308		TO DISTRIBUTING FRAME OR TO CONN CKT	312
0AT21L02	IO		309		TO DISTRIBUTING FRAME OR TO CONN CKT	312
0AT22L02	IO		310		TO DISTRIBUTING FRAME OR TO CONN CKT	312
0AT23L02	IO		311		TO DISTRIBUTING FRAME OR TO CONN CKT	312
0AT24L02	IO		345		TO DISTRIBUTING FRAME OR TO CONN CKT	312
0AT25L02	IO		346		TO DISTRIBUTING FRAME OR TO CONN CKT	312
0AT26L02	IO		347		TO DISTRIBUTING FRAME OR TO CONN CKT	312
0AT27L02	IO		348		TO DISTRIBUTING FRAME OR TO CONN CKT	312
0AT28L02	IO		349		TO DISTRIBUTING FRAME OR TO CONN CKT	312
0AT29L02	IO		350		TO DISTRIBUTING FRAME OR TO CONN CKT	312
0AT30L02	IO		351		TO DISTRIBUTING FRAME OR TO CONN CKT	312
0AT31L02	IO		352		TO DISTRIBUTING FRAME OR TO CONN CKT	108,312

SYMBOL NO. 3 (CONT)

SEE NOTE 1

DESIG: — EQPT LOC: 04-042 — CODE: SEE TABLE A — ELEM IDENT: A — OPT:

LEAD DESIG	FUNC	TERM. MOD	TERM.	TERM. OPT	DESTINATION	NOTE
0A0000	IO		022	1/1		312
0A1000	IO		122	1/1		312
0A2000	IO		023	1/1		312
0A3000	IO		123	1/1		312
0A4000	IO		024	1/1		312
0A5000	IO		124	1/1		312
0BZ000	IO		054	1/1		312
	IO		154	1/1		312
	IO		254	1/1		312
0CLK00	IO		333	1/1		312
0CURPRN	IO		012	1/1		312
0CURPRP	IO		112	1/1		312
0DRIN0	IO		323	1/1		312
0DWOUT0	IO		233	1/1		312
0EARTHG	IO		056	2/1		312
	IO		156	2/1		312
	IO		256	2/1		312
	IO		356	2/1		312
0JR00	IO		202	2/1		312
0JR01	IO		203	2/1		312
0JR02	IO		044	2/1		312
0JR03	IO		244	2/1		312
0JT00	IO		302	2/1		312
0JT01	IO		303	2/1		312
0JT02	IO		144	2/1		312
0JT03	IO		344	2/1		312
0READ0	IO		133	1/1		312
0SRVR002	IO		223	1/1		312
0WG1L0	IO		053	2/1		312
	IO		055	2/1		312
0WG2L0	IO		153	2/1		312
	IO		155	2/1		312
0WG3L0	IO		253	2/1		312
	IO		255	2/1		312
0WG4L0	IO		353	2/1		312
	IO		355	2/1		312
0WRITE0	IO		033	1/1		312

NOTE(S):

1. THE FOLLOWING ARE THE TITLES OF RESPECTIVE CIRCUIT PACK

   TN138 - METALLIC ACCESS BOARD
   TN2208 - MSU SCAN PACK
   TN221 - SIGNAL DISTRIBUTE PACK
   TN328 - AUTOMATIC LINE INSULATION TEST - HIGH HUMIDITY
   TN329 - AUTOMATIC LINE INSULATION TEST - MID HUMIDITY
   TN330 - AUTOMATIC LINE INSULATION TEST - LOW HUMIDITY
   TN880 - GDX COMPENSATOR
   TN1040 - DISTRIBUTING FRAME TEST ACCESS CIRCUIT
   TN1538 - AUTOMATIC LINE INSULATION TEST - HIGH HUMIDITY
   TN1539 - AUTOMATIC LINE INSULATION TEST - MID HUMIDITY
   TN1540 - AUTOMATIC LINE INSULATION TEST - LOW HUMIDITY
   TN1613 - AUTOMATIC LINE INSULATION TEST - HIGH HUMIDITY
   TN1614 - AUTOMATIC LINE INSULATION TEST - MID HUMIDITY
   TN1615 - AUTOMATIC LINE INSULATION TEST - LOW HUMIDITY
   TN3238 - AUTOMATIC LINE INSULATION TEST - HIGH HUMIDITY
   TN3298 - AUTOMATIC LINE INSULATION TEST - MID HUMIDITY
   TN3308 - AUTOMATIC LINE INSULATION TEST - LOW HUMIDITY
   TN1636 - AUTOMATIC LINE INSULATION TEST - VERY HIGH HUMIDITY

SYMBOL NO. 4

SEE NOTE 1

DESIG: — EQPT LOC: 04-050 — CODE: SEE TABLE A — ELEM IDENT: A — OPT:

LEAD DESIG	FUNC	TERM. MOD	TERM.	TERM. OPT	DESTINATION	NOTE
NC	I		013			312
	I		014			312
	I		015			312
	I		036			312
	I		037			312
	I		038			312
	I		039			312
	I		040			312
	I		041			312
	I		042			312
	I		043			312
	I		113			312
	I		114			312
	I		115			312
	I		116			312
	I		117			312
	I		118			312
	I		119			312
	I		213			312
	I		214			312
	I		215			312
	I		216			312
	I		217			312
	I		218			312
	I		219			312
	I		220			312
	I		236			312
	I		237			312
	I		238			312
	I		239			312
	I		240			312
	I		241			312
	I		242			312
	I		243			312
	I		354			312
+5V0	IO		034	1/1		312
	IO		035	1/1		312
	IO		134	1/1		312
	IO		135	1/1		312
-48RTN01	IO		200	1/1		312
	IO		201	1/1		312
	IO		300	1/1		312
	IO		301	1/1		312
-48V01	IO		000	1/1		312
	IO		001	1/1		312
	IO		100	1/1		312
	IO		101	1/1		312
GRD04050	IO		021			312
	IO		032			312
	IO		121			312
	IO		221			312
	IO		224			312
	IO		232			312
	IO		234			312
	IO		235			312
	IO		321			312
	IO		324			312
	IO		332			312
	IO		334			312
	IO		335			312

SYMBOL NO. 4 (CONT)

SEE NOTE 1

DESIG: — EQPT LOC: 04-050 — CODE: SEE TABLE A — ELEM IDENT: A — OPT:

LEAD DESIG	FUNC	TERM. MOD	TERM.	TERM. OPT	DESTINATION	NOTE
0AR00L03	IO		004		TO DISTRIBUTING FRAME	312
0AR01L03	IO		005		TO DISTRIBUTING FRAME	312
0AR02L03	IO		006		TO DISTRIBUTING FRAME	312
0AR03L03	IO		007		TO DISTRIBUTING FRAME	312
0AR04L03	IO		008		TO DISTRIBUTING FRAME	312
0AR05L03	IO		009		TO DISTRIBUTING FRAME	312
0AR06L03	IO		010		TO DISTRIBUTING FRAME	312
0AR07L03	IO		011		TO DISTRIBUTING FRAME	312
0AR08L03	IO		045		TO DISTRIBUTING FRAME	312
0AR09L03	IO		046		TO DISTRIBUTING FRAME	312
0AR10L03	IO		047		TO DISTRIBUTING FRAME	312
0AR11L03	IO		048		TO DISTRIBUTING FRAME	312
0AR12L03	IO		049		TO DISTRIBUTING FRAME	312
0AR13L03	IO		050		TO DISTRIBUTING FRAME	312
0AR14L03	IO		051		TO DISTRIBUTING FRAME	312
0AR15L03	IO		052		TO DISTRIBUTING FRAME	312
0AR16L03	IO		204		TO DISTRIBUTING FRAME	312
0AR17L03	IO		205		TO DISTRIBUTING FRAME	312
0AR18L03	IO		206		TO DISTRIBUTING FRAME	312
0AR19L03	IO		207		TO DISTRIBUTING FRAME	312
0AR20L03	IO		208		TO DISTRIBUTING FRAME	312
0AR21L03	IO		209		TO DISTRIBUTING FRAME	312
0AR22L03	IO		210		TO DISTRIBUTING FRAME	312
0AR23L03	IO		211		TO DISTRIBUTING FRAME	312
0AR24L03	IO		245		TO DISTRIBUTING FRAME	312
0AR25L03	IO		246		TO DISTRIBUTING FRAME	312
0AR26L03	IO		247		TO DISTRIBUTING FRAME	312
0AR27L03	IO		248		TO DISTRIBUTING FRAME	312
0AR28L03	IO		249		TO DISTRIBUTING	312

PART OF FS 2
SYMBOL(S) 3 4

COPYRIGHT (C) 1988 AT&T
ALL RIGHTS RESERVED

MODULAR METALLIC SERVICE UNIT

DWG SIZE	ISSUE
D2	7B

AT&T	SD-5D015-01	B2CD

PART OF FS 2

EXTERNAL CONNECTIONS - SERVICE GROUP 0

SYMBOL NO. 4 (CONT)

SEE NOTE 1

DESIG	EQPT LOC	CODE	ELEM IDENT	OPT
	04-050	SEE TABLE A	A	

LEAD DESIG	FUNC	TERM. MOD	TERM.	TERM. OPT	DESTINATION	NOTE
					FRAME	
0AR29L03	IO		250		TO DISTRIBUTING FRAME	312
0AR30L03	IO		251		TO DISTRIBUTING FRAME	312
0AR31L03	IO		252		TO DISTRIBUTING FRAME	312
0ASW00	IO		222		3/1	312
0ASW01	IO		322		3/1	312
0AT00L03	IO		104		TO DISTRIBUTING FRAME	312
0AT01L03	IO		105		TO DISTRIBUTING FRAME	312
0AT02L03	IO		106		TO DISTRIBUTING FRAME	312
0AT03L03	IO		107		TO DISTRIBUTING FRAME	312
0AT04L03	IO		108		TO DISTRIBUTING FRAME	312
0AT05L03	IO		109		TO DISTRIBUTING FRAME	312
0AT06L03	IO		110		TO DISTRIBUTING FRAME	312
0AT07L03	IO		111		TO DISTRIBUTING FRAME	312
0AT08L03	IO		145		TO DISTRIBUTING FRAME	312
0AT09L03	IO		146		TO DISTRIBUTING FRAME	312
0AT10L03	IO		147		TO DISTRIBUTING FRAME	312
0AT11L03	IO		148		TO DISTRIBUTING FRAME	312
0AT12L03	IO		149		TO DISTRIBUTING FRAME	312
0AT13L03	IO		150		TO DISTRIBUTING FRAME	312
0AT14L03	IO		151		TO DISTRIBUTING FRAME	312
0AT15L03	IO		152		TO DISTRIBUTING FRAME	312
0AT16L03	IO		304		TO DISTRIBUTING FRAME	312
0AT17L03	IO		305		TO DISTRIBUTING FRAME	312
0AT18L03	IO		306		TO DISTRIBUTING FRAME	312
0AT19L03	IO		307		TO DISTRIBUTING FRAME	312
0AT20L03	IO		308		TO DISTRIBUTING FRAME	312
0AT21L03	IO		309		TO DISTRIBUTING FRAME	312
0AT22L03	IO		310		TO DISTRIBUTING FRAME	312
0AT23L03	IO		311		TO DISTRIBUTING FRAME	312
0AT24L03	IO		345		TO DISTRIBUTING FRAME	312
0AT25L03	IO		346		TO DISTRIBUTING FRAME	312
0AT26L03	IO		347		TO DISTRIBUTING FRAME	312
0AT27L03	IO		348		TO DISTRIBUTING FRAME	312
0AT28L03	IO		349		TO DISTRIBUTING FRAME	312

SYMBOL NO. 4 (CONT)

SEE NOTE 1

DESIG	EQPT LOC	CODE	ELEM IDENT	OPT
	04-050	SEE TABLE A	A	

LEAD DESIG	FUNC	TERM. MOD	TERM.	TERM. OPT	DESTINATION	NOTE
0AT29L03	IO		350		TO DISTRIBUTING FRAME	312
0AT30L03	IO		351		TO DISTRIBUTING FRAME	312
0AT31L03	IO		352		TO DISTRIBUTING FRAME	312
0A0000	IO		023		1/1	312
0A1000	IO		123		1/1	312
0A2000	IO		024		1/1	312
0A3000	IO		124		1/1	312
0A6000	IO		022		1/1	312
0A7000	IO		122		1/1	312
0B3000	IO		054		1/1	312
	IO		154		1/1	312
	IO		254		1/1	312
0CLK00	IO		333		1/1	312
0CURPRN	IO		012		1/1	312
0CURPRP	IO		112		1/1	312
0DRIN0	IO		323		3/1	312
0DWOUT0	IO		233		1/1	312
0EARTHG	IO		056		2/1	312
	IO		156		2/1	312
	IO		256		2/1	312
	IO		356		2/1	312
0JR00	IO		202		2/1	312
0JR01	IO		203		2/1	312
0JR02	IO		044		2/1	312
0JR03	IO		244		2/1	312
0JT00	IO		302		2/1	312
0JT01	IO		303		2/1	312
0JT02	IO		144		2/1	312
0JT03	IO		344		2/1	312
0READ0	IO		133		1/1	312
0SRVR003	IO		223		1/1	312
0WG1L0	IO		053		2/1	312
	IO		055		2/1	312
0WG2L0	IO		153		2/1	312
	IO		155		2/1	312
0WG3L0	IO		253		2/1	312
	IO		255		2/1	312
0WG4L0	IO		353		2/1	312
	IO		355		2/1	312
0WRITE0	IO		033		1/1	312

NOTE(S):

1. THE FOLLOWING ARE THE TITLES OF RESPECTIVE CIRCUIT PACK

   TN138 - METALLIC ACCESS BOARD
   TN220B - MSU SCAN PACK
   TN221 - SIGNAL DISTRIBUTE PACK
   TN328 - AUTOMATIC LINE INSULATION TEST - HIGH HUMIDITY
   TN329 - AUTOMATIC LINE INSULATION TEST - MID HUMIDITY
   TN330 - AUTOMATIC LINE INSULATION TEST - LOW HUMIDITY
   TN880 - GDX COMPENSATOR
   TN1040 - DISTRIBUTING FRAME TEST ACCESS CIRCUIT
   TN1538 - AUTOMATIC LINE INSULATION TEST - HIGH HUMIDITY
   TN1539 - AUTOMATIC LINE INSULATION TEST - MID HUMIDITY
   TN1540 - AUTOMATIC LINE INSULATION TEST - LOW HUMIDITY
   TN1613 - AUTOMATIC LINE INSULATION TEST - HIGH HUMIDITY
   TN1614 - AUTOMATIC LINE INSULATION TEST - MID HUMIDITY
   TN1615 - AUTOMATIC LINE INSULATION TEST - LOW HUMIDITY
   TN3288 - AUTOMATIC LINE INSULATION TEST - HIGH HUMIDITY
   TN3298 - AUTOMATIC LINE INSULATION TEST - MID HUMIDITY
   TN3308 - AUTOMATIC LINE INSULATION TEST - LOW HUMIDITY
   TN1636 - AUTOMATIC LINE INSULATION TEST - VERY HIGH HUMIDITY

SYMBOL NO. 5

SEE NOTE 1

DESIG	EQPT LOC	CODE	ELEM IDENT	OPT
	04-058	SEE TABLE A	A	

LEAD DESIG	FUNC	TERM. MOD	TERM.	TERM. OPT	DESTINATION	NOTE
NC	I		013			312
	I		014			312
	I		015			312
	I		036			312
	I		037			312
	I		038			312
	I		039			312
	I		040			312
	I		041			312
	I		042			312
	I		043			312
	I		113			312
	I		114			312
	I		115			312
	I		116			312
	I		117			312
	I		118			312
	I		119			312
	I		213			312
	I		214			312
	I		215			312
	I		216			312
	I		217			312
	I		218			312
	I		219			312
	I		220			312
	I		236			312
	I		237			312
	I		238			312
	I		239			312
	I		240			312
	I		241			312
	I		242			312
	I		243			312
	I		354			312
+5V0	IO		034	1/1		312
	IO		035	1/1		312
	IO		134	1/1		312
	IO		135	1/1		312
-48RTN01	IO		200	1/1		312
	IO		201	1/1		312
	IO		300	1/1		312
	IO		301	1/1		312
-48V01	IO		000	1/1		312
	IO		001	1/1		312
	IO		100	1/1		312
	IO		101	1/1		312
GRD04058	IO		021			312
	IO		032			312
	IO		121			312
	IO		221			312
	IO		224			312
	IO		232			312
	IO		234			312
	IO		235			312
	IO		321			312
	IO		324			312
	IO		332			312
	IO		334			312
	IO		335			312

SYMBOL NO. 5 (CONT)

SEE NOTE 1

DESIG	EQPT LOC	CODE	ELEM IDENT	OPT
	04-058	SEE TABLE A	A	

LEAD DESIG	FUNC	TERM. MOD	TERM.	TERM. OPT	DESTINATION	NOTE
0AR00L04	IO		004		TO DISTRIBUTING FRAME	312
0AR01L04	IO		005		TO DISTRIBUTING FRAME	312
0AR02L04	IO		006		TO DISTRIBUTING FRAME	312
0AR03L04	IO		007		TO DISTRIBUTING FRAME	312
0AR04L04	IO		008		TO DISTRIBUTING FRAME	312
0AR05L04	IO		009		TO DISTRIBUTING FRAME	312
0AR06L04	IO		010		TO DISTRIBUTING FRAME	312
0AR07L04	IO		011		TO DISTRIBUTING FRAME	312
0AR08L04	IO		045		TO DISTRIBUTING FRAME	312
0AR09L04	IO		046		TO DISTRIBUTING FRAME	312
0AR10L04	IO		047		TO DISTRIBUTING FRAME	312
0AR11L04	IO		048		TO DISTRIBUTING FRAME	312
0AR12L04	IO		049		TO DISTRIBUTING FRAME	312
0AR13L04	IO		050		TO DISTRIBUTING FRAME	312
0AR14L04	IO		051		TO DISTRIBUTING FRAME	312
0AR15L04	IO		052		TO DISTRIBUTING FRAME	312
0AR16L04	IO		204		TO DISTRIBUTING FRAME	312
0AR17L04	IO		205		TO DISTRIBUTING FRAME	312
0AR18L04	IO		206		TO DISTRIBUTING FRAME	312
0AR19L04	IO		207		TO DISTRIBUTING FRAME	312
0AR20L04	IO		208		TO DISTRIBUTING FRAME	312
0AR21L04	IO		209		TO DISTRIBUTING FRAME	312
0AR22L04	IO		210		TO DISTRIBUTING FRAME	312
0AR23L04	IO		211		TO DISTRIBUTING FRAME	312
0AR24L04	IO		245		TO DISTRIBUTING FRAME	312
0AR25L04	IO		246		TO DISTRIBUTING FRAME	312
0AR26L04	IO		247		TO DISTRIBUTING FRAME	312
0AR27L04	IO		248		TO DISTRIBUTING FRAME	312
0AR28L04	IO		249		TO DISTRIBUTING	312

PART OF FS 2
SYMBOL(S) 4 5

COPYRIGHT (c) 1988 AT&T
ALL RIGHTS RESERVED

MODULAR METALLIC SERVICE UNIT

DWG SIZE: D
ISSUE: 7B

AT&T | SD-5D015-01 | B2CE

PART OF FS 2

EXTERNAL CONNECTIONS - SERVICE GROUP 0

SYMBOL NO. 5 (CONT)

SEE NOTE 1

DESIG: ----- EQPT LOC: ---- 04-058 CODE: ---- SEE TABLE A ELEM IDENT: ----- A OPT: ---

LEAD DESIG	FUNC	TERM. MOD	TERM.	TERM. OPT	DESTINATION	NOTE
0AR29L04	IO		250		FRAME TO DISTRIBUTING FRAME	312
0AR30L04	IO		251		TO DISTRIBUTING FRAME	312
0AR31L04	IO		252		TO DISTRIBUTING FRAME	312
0ASW00	IO		222		3/1	312
0ASW01	IO		322		3/1	312
0AT00L04	IO		104		TO DISTRIBUTING FRAME	312
0AT01L04	IO		105		TO DISTRIBUTING FRAME	312
0AT02L04	IO		106		TO DISTRIBUTING FRAME	312
0AT03L04	IO		107		TO DISTRIBUTING FRAME	312
0AT04L04	IO		108		TO DISTRIBUTING FRAME	312
0AT05L04	IO		109		TO DISTRIBUTING FRAME	312
0AT06L04	IO		110		TO DISTRIBUTING FRAME	312
0AT07L04	IO		111		TO DISTRIBUTING FRAME	312
0AT08L04	IO		145		TO DISTRIBUTING FRAME	312
0AT09L04	IO		146		TO DISTRIBUTING FRAME	312
0AT10L04	IO		147		TO DISTRIBUTING FRAME	312
0AT11L04	IO		148		TO DISTRIBUTING FRAME	312
0AT12L04	IO		149		TO DISTRIBUTING FRAME	312
0AT13L04	IO		150		TO DISTRIBUTING FRAME	312
0AT14L04	IO		151		TO DISTRIBUTING FRAME	312
0AT15L04	IO		152		TO DISTRIBUTING FRAME	312
0AT16L04	IO		304		TO DISTRIBUTING FRAME	312
0AT17L04	IO		305		TO DISTRIBUTING FRAME	312
0AT18L04	IO		306		TO DISTRIBUTING FRAME	312
0AT19L04	IO		307		TO DISTRIBUTING FRAME	312
0AT20L04	IO		308		TO DISTRIBUTING FRAME	312
0AT21L04	IO		309		TO DISTRIBUTING FRAME	312
0AT22L04	IO		310		TO DISTRIBUTING FRAME	312
0AT23L04	IO		311		TO DISTRIBUTING FRAME	312
0AT24L04	IO		345		TO DISTRIBUTING FRAME	312
0AT25L04	IO		346		TO DISTRIBUTING FRAME	312
0AT26L04	IO		347		TO DISTRIBUTING FRAME	312
0AT27L04	IO		348		TO DISTRIBUTING FRAME	312
0AT28L04	IO		349		TO DISTRIBUTING FRAME	312

SYMBOL NO. 5 (CONT)

SEE NOTE 1

DESIG: ----- EQPT LOC: ---- 04-058 CODE: ---- SEE TABLE A ELEM IDENT: ----- A OPT: ---

LEAD DESIG	FUNC	TERM. MOD	TERM.	TERM. OPT	DESTINATION	NOTE
0AT29L04	IO		350		TO DISTRIBUTING FRAME	312
0AT30L04	IO		351		TO DISTRIBUTING FRAME	312
0AT31L04	IO		352		TO DISTRIBUTING FRAME	312
0A0000	IO		024		1/1	312
0A1000	IO		124		1/1	312
0A4000	IO		022		1/1	312
0A5000	IO		122		1/1	312
0A6000	IO		023		1/1	312
0A7000	IO		123		1/1	312
0B4000	IO		054		1/1	312
	IO		154		1/1	312
	IO		254		1/1	312
0CLK00	IO		333		1/1	312
0CUPPRN	IO		012		1/1	312
0CURPRP	IO		112		1/1	312
0DRIN0	IO		323		3/1	312
0DWOUT0	IO		233		1/1	312
0EARTHG	IO		056		2/1	312
	IO		156		2/1	312
	IO		256		2/1	312
	IO		356		2/1	312
0JR00	IO		202		2/1	312
0JR01	IO		203		2/1	312
0JR02	IO		044		2/1	312
0JR03	IO		244		2/1	312
0JT00	IO		302		2/1	312
0JT01	IO		303		2/1	312
0JT02	IO		144		2/1	312
0JT03	IO		344		2/1	312
0READ0	IO		133		1/1	312
0SRVR004	IO		223		1/1	312
0WG1L0	IO		053		2/1	312
	IO		055		2/1	312
0WG2L0	IO		153		2/1	312
	IO		155		2/1	312
0WG3L0	IO		253		2/1	312
	IO		255		2/1	312
0WG4L0	IO		353		2/1	312
	IO		355		2/1	312
0WRITE0	IO		033		1/1	312

NOTE(S):

1. THE FOLLOWING ARE THE TITLES OF RESPECTIVE CIRCUIT PACK

   TN138 - METALLIC ACCESS BOARD
   TN220B - MSU SCAN PACK
   TN221 - SIGNAL DISTRIBUTE PACK
   TN328 - AUTOMATIC LINE INSULATION TEST - HIGH HUMIDITY
   TN329 - AUTOMATIC LINE INSULATION TEST - MID HUMIDITY
   TN330 - AUTOMATIC LINE INSULATION TEST - LOW HUMIDITY
   TN880 - GDX COMPENSATOR
   TN1040 - DISTRIBUTING FRAME TEST ACCESS CIRCUIT
   TN1538 - AUTOMATIC LINE INSULATION TEST - HIGH HUMIDITY
   TN1539 - AUTOMATIC LINE INSULATION TEST - MID HUMIDITY
   TN1540 - AUTOMATIC LINE INSULATION TEST - LOW HUMIDITY
   TN1613 - AUTOMATIC LINE INSULATION TEST - HIGH HUMIDITY
   TN1614 - AUTOMATIC LINE INSULATION TEST - MID HUMIDITY
   TN1615 - AUTOMATIC LINE INSULATION TEST - LOW HUMIDITY
   TN3288 - AUTOMATIC LINE INSULATION TEST - HIGH HUMIDITY
   TN3298 - AUTOMATIC LINE INSULATION TEST - MID HUMIDITY
   TN330B - AUTOMATIC LINE INSULATION TEST - LOW HUMIDITY
   TN1636 - AUTOMATIC LINE INSULATION TEST - VERY HIGH HUMIDITY

SYMBOL NO. 6

SEE NOTE 1

DESIG: ----- EQPT LOC: ---- 04-066 CODE: ---- SEE TABLE A ELEM IDENT: ----- A OPT: ---

LEAD DESIG	FUNC	TERM. MOD	TERM.	TERM. OPT	DESTINATION	NOTE
NC	I		013			312
	I		014			312
	I		015			312
	I		036			312
	I		037			312
	I		038			312
	I		039			312
	I		040			312
	I		041			312
	I		042			312
	I		043			312
	I		113			312
	I		114			312
	I		115			312
	I		116			312
	I		117			312
	I		118			312
	I		119			312
	I		213			312
	I		214			312
	I		215			312
	I		216			312
	I		217			312
	I		218			312
	I		219			312
	I		220			312
	I		236			312
	I		237			312
	I		238			312
	I		239			312
	I		240			312
	I		241			312
	I		242			312
	I		243			312
	I		354			312
+5V0	IO		034	1/1		312
	IO		035	1/1		312
	IO		134	1/1		312
	IO		135	1/1		312
-48RTN01	IO		200	1/1		312
	IO		201	1/1		312
	IO		300	1/1		312
	IO		301	1/1		312
-48V01	IO		000	1/1		312
	IO		001	1/1		312
	IO		100	1/1		312
	IO		101	1/1		312
GRD04066	IO		021			312
	IO		032			312
	IO		121			312
	IO		221			312
	IO		224			312
	IO		232			312
	IO		234			312
	IO		235			312
	IO		321			312
	IO		324			312
	IO		332			312
	IO		334			312
	IO		335			312

SYMBOL NO. 6 (CONT)

SEE NOTE 1

DESIG: ----- EQPT LOC: ---- 04-066 CODE: ---- SEE TABLE A ELEM IDENT: ----- A OPT: ---

LEAD DESIG	FUNC	TERM. MOD	TERM.	TERM. OPT	DESTINATION	NOTE
0AR00L05	IO		004		TO DISTRIBUTING FRAME	312
0AR01L05	IO		005		TO DISTRIBUTING FRAME	312
0AR02L05	IO		006		TO DISTRIBUTING FRAME	312
0AR03L05	IO		007		TO DISTRIBUTING FRAME	312
0AR04L05	IO		008		TO DISTRIBUTING FRAME	312
0AR05L05	IO		009		TO DISTRIBUTING FRAME	312
0AR06L05	IO		010		TO DISTRIBUTING FRAME	312
0AR07L05	IO		011		TO DISTRIBUTING FRAME	312
0AR08L05	IO		045		TO DISTRIBUTING FRAME	312
0AR09L05	IO		046		TO DISTRIBUTING FRAME	312
0AR10L05	IO		047		TO DISTRIBUTING FRAME	312
0AR11L05	IO		048		TO DISTRIBUTING FRAME	312
0AR12L05	IO		049		TO DISTRIBUTING FRAME	312
0AR13L05	IO		050		TO DISTRIBUTING FRAME	312
0AR14L05	IO		051		TO DISTRIBUTING FRAME	312
0AR15L05	IO		052		TO DISTRIBUTING FRAME	312
0AR16L05	IO		204		TO DISTRIBUTING FRAME	312
0AR17L05	IO		205		TO DISTRIBUTING FRAME	312
0AR18L05	IO		206		TO DISTRIBUTING FRAME	312
0AR19L05	IO		207		TO DISTRIBUTING FRAME	312
0AR20L05	IO		208		TO DISTRIBUTING FRAME	312
0AR21L05	IO		209		TO DISTRIBUTING FRAME	312
0AR22L05	IO		210		TO DISTRIBUTING FRAME	312
0AR23L05	IO		211		TO DISTRIBUTING FRAME	312
0AR24L05	IO		245		TO DISTRIBUTING FRAME	312
0AR25L05	IO		246		TO DISTRIBUTING FRAME	312
0AR26L05	IO		247		TO DISTRIBUTING FRAME	312
0AR27L05	IO		248		TO DISTRIBUTING FRAME	312
0AR28L05	IO		249		TO DISTRIBUTING	312

PART OF FS 2
SYMBOL(S) 5 6

COPYRIGHT (C) 1988 AT&T
ALL RIGHTS RESERVED

MODULAR METALLIC SERVICE UNIT

DWG SIZE: C2 ISSUE: 7B

AT&T SD-5D015-01 B2CF

PART OF FS 2

EXTERNAL CONNECTIONS - SERVICE GROUP 0

SYMBOL NO. 6 (CONT)

SEE NOTE 1

DESIG: ----- EQPT LOC: 04-066 CODE: SEE TABLE A ELEM IDENT: A OPT: ---

LEAD DESIG	FUNC	TERM. MOD	TERM.	TERM. OPT	DESTINATION	NOTE
0AR29L05	IO		250		FRAME TO DISTRIBUTING FRAME	312
0AR30L05	IO		251		TO DISTRIBUTING FRAME	312
0AR31L05	IO		252		TO DISTRIBUTING FRAME	312
0ASW00	IO		222		3/1	312
0ASW01	IO		322		3/1	312
0AT00L05	IO		104		TO DISTRIBUTING FRAME	312
0AT01L05	IO		105		TO DISTRIBUTING FRAME	312
0AT02L05	IO		106		TO DISTRIBUTING FRAME	312
0AT03L05	IO		107		TO DISTRIBUTING FRAME	312
0AT04L05	IO		108		TO DISTRIBUTING FRAME	312
0AT05L05	IO		109		TO DISTRIBUTING FRAME	312
0AT06L05	IO		110		TO DISTRIBUTING FRAME	312
0AT07L05	IO		111		TO DISTRIBUTING FRAME	312
0AT08L05	IO		145		TO DISTRIBUTING FRAME	312
0AT09L05	IO		146		TO DISTRIBUTING FRAME	312
0AT10L05	IO		147		TO DISTRIBUTING FRAME	312
0AT11L05	IO		148		TO DISTRIBUTING FRAME	312
0AT12L05	IO		149		TO DISTRIBUTING FRAME	312
0AT13L05	IO		150		TO DISTRIBUTING FRAME	312
0AT14L05	IO		151		TO DISTRIBUTING FRAME	312
0AT15L05	IO		152		TO DISTRIBUTING FRAME	312
0AT16L05	IO		304		TO DISTRIBUTING FRAME	312
0AT17L05	IO		305		TO DISTRIBUTING FRAME	312
0AT18L05	IO		306		TO DISTRIBUTING FRAME	312
0AT19L05	IO		307		TO DISTRIBUTING FRAME	312
0AT20L05	IO		308		TO DISTRIBUTING FRAME	312
0AT21L05	IO		309		TO DISTRIBUTING FRAME	312
0AT22L05	IO		310		TO DISTRIBUTING FRAME	312
0AT23L05	IO		311		TO DISTRIBUTING FRAME	312
0AT24L05	IO		345		TO DISTRIBUTING FRAME	312
0AT25L05	IO		346		TO DISTRIBUTING FRAME	312
0AT26L05	IO		347		TO DISTRIBUTING FRAME	312
0AT27L05	IO		348		TO DISTRIBUTING FRAME	312
0AT28L05	IO		349		TO DISTRIBUTING FRAME	312

SYMBOL NO. 6 (CONT)

SEE NOTE 1

DESIG: ----- EQPT LOC: 04-066 CODE: SEE TABLE A ELEM IDENT: A OPT: ---

LEAD DESIG	FUNC	TERM. MOD	TERM.	TERM. OPT	DESTINATION	NOTE
0AT29L05	IO		350		TO DISTRIBUTING FRAME	312
0AT30L05	IO		351		TO DISTRIBUTING FRAME	312
0AT31L05	IO		352		TO DISTRIBUTING FRAME	312
0AZ000	IO		022		1/1	312
0A3000	IO		122		1/1	312
0A4000	IO		023		1/1	312
0A5000	IO		123		1/1	312
0A6000	IO		024		1/1	312
0A7000	IO		124		1/1	312
0B5000	IO		054		1/1	312
	IO		154		1/1	312
	IO		254		1/1	312
0CLK00	IO		333		1/1	312
0CURPRN	IO		012		1/1	312
0CURPRP	IO		112		1/1	312
0DRIN0	IO		323		3/1	312
0DWOUT0	IO		233		1/1	312
0EARTHG	IO		056		2/1	312
	IO		156		2/1	312
	IO		256		2/1	312
	IO		356		2/1	312
0JR00	IO		202		2/1	312
0JR01	IO		203		2/1	312
0JR02	IO		044		2/1	312
0JR03	IO		244		2/1	312
0JT00	IO		302		2/1	312
0JT01	IO		303		2/1	312
0JT02	IO		144		2/1	312
0JT03	IO		344		2/1	312
0PEAD0	IO		133		1/1	312
0SRVRQ05	IO		223		1/1	312
0WG1L0	IO		053		2/1	312
	IO		055		2/1	312
0WG2L0	IO		153		2/1	312
	IO		155		2/1	312
0WG3L0	IO		253		2/1	312
	IO		255		2/1	312
0WG4L0	IO		353		2/1	312
	IO		355		2/1	312
0WRITE0	IO		033		1/1	312

NOTE(S):

1. THE FOLLOWING ARE THE TITLES OF RESPECTIVE CIRCUIT PACK

   TN138 - METALLIC ACCESS BOARD
   TN220B - MSU SCAN PACK
   TN221 - SIGNAL DISTRIBUTE PACK
   TN328 - AUTOMATIC LINE INSULATION TEST - HIGH HUMIDITY
   TN329 - AUTOMATIC LINE INSULATION TEST - MID HUMIDITY
   TN330 - AUTOMATIC LINE INSULATION TEST - LOW HUMIDITY
   TN880 - GDX COMPENSATOR
   TN1040 - DISTRIBUTING FRAME TEST ACCESS CIRCUIT
   TN1538 - AUTOMATIC LINE INSULATION TEST - HIGH HUMIDITY
   TN1539 - AUTOMATIC LINE INSULATION TEST - MID HUMIDITY
   TN1540 - AUTOMATIC LINE INSULATION TEST - LOW HUMIDITY
   TN1613 - AUTOMATIC LINE INSULATION TEST - HIGH HUMIDITY
   TN1614 - AUTOMATIC LINE INSULATION TEST - MID HUMIDITY
   TN1615 - AUTOMATIC LINE INSULATION TEST - LOW HUMIDITY
   TN328B - AUTOMATIC LINE INSULATION TEST - HIGH HUMIDITY
   TN329B - AUTOMATIC LINE INSULATION TEST - MID HUMIDITY
   TN330B - AUTOMATIC LINE INSULATION TEST - LOW HUMIDITY
   TN1636 - AUTOMATIC LINE INSULATION TEST - VERY HIGH HUMIDITY

SYMBOL NO. 7

SEE NOTE 1

DESIG: ----- EQPT LOC: 04-074 CODE: SEE TABLE A ELEM IDENT: A OPT: ---

LEAD DESIG	FUNC	TERM. MOD	TERM.	TERM. OPT	DESTINATION	NOTE
NC	I		013			312
	I		014			312
	I		015			312
	I		036			312
	I		037			312
	I		038			312
	I		039			312
	I		040			312
	I		041			312
	I		042			312
	I		043			312
	I		113			312
	I		114			312
	I		115			312
	I		116			312
	I		117			312
	I		118			312
	I		119			312
	I		213			312
	I		214			312
	I		215			312
	I		216			312
	I		217			312
	I		218			312
	I		219			312
	I		220			312
	I		236			312
	I		237			312
	I		238			312
	I		239			312
	I		240			312
	I		241			312
	I		242			312
	I		243			312
	I		354			312
+5V0	IO		034	1/1		312
	IO		035	1/1		312
	IO		134	1/1		312
	IO		135	1/1		312
-48RTN01	IO		200	1/1		312
	IO		201	1/1		312
	IO		300	1/1		312
-48V01	IO		301	1/1		312
	IO		000	1/1		312
	IO		001	1/1		312
	IO		100	1/1		312
	IO		101	1/1		312
GRD04074	IO		021			312
	IO		032			312
	IO		121			312
	IO		221			312
	IO		224			312
	IO		232			312
	IO		234			312
	IO		235			312
	IO		321			312
	IO		324			312
	IO		332			312
	IO		334			312
	IO		335			312

SYMBOL NO. 7 (CONT)

SEE NOTE 1

DESIG: ----- EQPT LOC: 04-074 CODE: SEE TABLE A ELEM IDENT: A OPT: ---

LEAD DESIG	FUNC	TERM. MOD	TERM.	TERM. OPT	DESTINATION	NOTE
0AR00L06	IO		004		TO DISTRIBUTING FRAME	312
0AR01L06	IO		005		TO DISTRIBUTING FRAME	312
0AR02L06	IO		006		TO DISTRIBUTING FRAME	312
0AR03L06	IO		007		TO DISTRIBUTING FRAME	312
0AR04L06	IO		008		TO DISTRIBUTING FRAME	312
0AR05L06	IO		009		TO DISTRIBUTING FRAME	312
0AR06L06	IO		010		TO DISTRIBUTING FRAME	312
0AR07L06	IO		011		TO DISTRIBUTING FRAME	312
0AR08L06	IO		045		TO DISTRIBUTING FRAME	312
0AR09L06	IO		046		TO DISTRIBUTING FRAME	312
0AR10L06	IO		047		TO DISTRIBUTING FRAME	312
0AR11L06	IO		048		TO DISTRIBUTING FRAME	312
0AR12L06	IO		049		TO DISTRIBUTING FRAME	312
0AR13L06	IO		050		TO DISTRIBUTING FRAME	312
0AR14L06	IO		051		TO DISTRIBUTING FRAME	312
0AR15L06	IO		052		TO DISTRIBUTING FRAME	312
0AR16L06	IO		204		TO DISTRIBUTING FRAME	312
0AR17L06	IO		205		TO DISTRIBUTING FRAME	312
0AR18L06	IO		206		TO DISTRIBUTING FRAME	312
0AR19L06	IO		207		TO DISTRIBUTING FRAME	312
0AR20L06	IO		208		TO DISTRIBUTING FRAME	312
0AR21L06	IO		209		TO DISTRIBUTING FRAME	312
0AR22L06	IO		210		TO DISTRIBUTING FRAME	312
0AR23L06	IO		211		TO DISTRIBUTING FRAME	312
0AR24L06	IO		245		TO DISTRIBUTING FRAME	312
0AR25L06	IO		246		TO DISTRIBUTING FRAME	312
0AR26L06	IO		247		TO DISTRIBUTING FRAME	312
0AR27L06	IO		248		TO DISTRIBUTING FRAME	312
0AR28L06	IO		249		TO DISTRIBUTING FRAME	312

PART OF FS 2
SYMBOL(S) 6 7

COPYRIGHT (c) 1988 AT&T
ALL RIGHTS RESERVED

MODULAR METALLIC SERVICE UNIT

DWG SIZE	ISSUE
C2	7B

AT&T	SD-5D015-01	BZCG

PART OF FS 2

EXTERNAL CONNECTIONS - SERVICE GROUP 0

SYMBOL NO. 7 (CONT)

SEE NOTE 1

DESIG: — EQPT LOC: 04-074 — CODE: SEE TABLE A — ELEM IDENT: A — OPT:

LEAD DESIG	FUNC	TERM. MOD	TERM.	TERM. OPT	DESTINATION	NOTE
					FRAME	
0AR29L06	IO		250		TO DISTRIBUTING FRAME	312
0AR30L06	IO		251		TO DISTRIBUTING FRAME	312
0AR31L06	IO		252		TO DISTRIBUTING FRAME	312
0ASW00	IO		222		3/1	312
0ASW01	IO		322		3/1	312
0AT00L06	IO		104		TO DISTRIBUTING FRAME	312
0AT01L06	IO		105		TO DISTRIBUTING FRAME	312
0AT02L06	IO		106		TO DISTRIBUTING FRAME	312
0AT03L06	IO		107		TO DISTRIBUTING FRAME	312
0AT04L06	IO		108		TO DISTRIBUTING FRAME	312
0AT05L06	IO		109		TO DISTRIBUTING FRAME	312
0AT06L06	IO		110		TO DISTRIBUTING FRAME	312
0AT07L06	IO		111		TO DISTRIBUTING FRAME	312
0AT08L06	IO		145		TO DISTRIBUTING FRAME	312
0AT09L06	IO		146		TO DISTRIBUTING FRAME	312
0AT10L06	IO		147		TO DISTRIBUTING FRAME	312
0AT11L06	IO		148		TO DISTRIBUTING FRAME	312
0AT12L06	IO		149		TO DISTRIBUTING FRAME	312
0AT13L06	IO		150		TO DISTRIBUTING FRAME	312
0AT14L06	IO		151		TO DISTRIBUTING FRAME	312
0AT15L06	IO		152		TO DISTRIBUTING FRAME	312
0AT16L06	IO		304		TO DISTRIBUTING FRAME	312
0AT17L06	IO		305		TO DISTRIBUTING FRAME	312
0AT18L06	IO		306		TO DISTRIBUTING FRAME	312
0AT19L06	IO		307		TO DISTRIBUTING FRAME	312
0AT20L06	IO		308		TO DISTRIBUTING FRAME	312
0AT21L06	IO		309		TO DISTRIBUTING FRAME	312
0AT22L06	IO		310		TO DISTRIBUTING FRAME	312
0AT23L06	IO		311		TO DISTRIBUTING FRAME	312
0AT24L06	IO		345		TO DISTRIBUTING FRAME	312
0AT25L06	IO		346		TO DISTRIBUTING FRAME	312
0AT26L06	IO		347		TO DISTRIBUTING FRAME	312
0AT27L06	IO		348		TO DISTRIBUTING FRAME	312
0AT28L06	IO		349		TO DISTRIBUTING FRAME	312

SYMBOL NO. 7 (CONT)

SEE NOTE 1

DESIG: — EQPT LOC: 04-074 — CODE: SEE TABLE A — ELEM IDENT: A — OPT:

LEAD DESIG	FUNC	TERM. MOD	TERM.	TERM. OPT	DESTINATION	NOTE
0AT29L06	IO		350		TO DISTRIBUTING FRAME	312
0AT30L06	IO		351		TO DISTRIBUTING FRAME	312
0AT31L06	IO		352		TO DISTRIBUTING FRAME	312
0A0000	IO		022		1/1	312
0A1000	IO		122		1/1	312
0A2000	IO		023		1/1	312
0A3000	IO		123		1/1	312
0A4000	IO		024		1/1	312
0A5000	IO		124		1/1	312
0B6000	IO		054		1/1	312
	IO		154		1/1	312
	IO		254		1/1	312
0CLK00	IO		333		1/1	312
0CURPRN	IO		012		1/1	312
0CURPRP	IO		112		1/1	312
0DRIN0	IO		323		3/1	312
0DWOUT0	IO		233		1/1	312
0EARTHG	IO		056		2/1	312
	IO		156		2/1	312
	IO		256		2/1	312
	IO		356		2/1	312
0JR00	IO		202		2/1	312
0JR01	IO		203		2/1	312
0JR02	IO		044		2/1	312
0JR03	IO		244		2/1	312
0JT00	IO		302		2/1	312
0JT01	IO		303		2/1	312
0JT02	IO		144		2/1	312
0JT03	IO		344		2/1	312
0READ0	IO		133		1/1	312
0SRVRQ06	IO		223		1/1	312
0WG1L0	IO		053		2/1	312
	IO		055		2/1	312
0WG2L0	IO		153		2/1	312
	IO		155		2/1	312
0WG3L0	IO		253		2/1	312
	IO		255		2/1	312
0WG4L0	IO		353		2/1	312
	IO		355		2/1	312
0WRITE0	IO		033		1/1	312

NOTE(S):

1. THE FOLLOWING ARE THE TITLES OF RESPECTIVE CIRCUIT PACK

   TN138 - METALLIC ACCESS BOARD
   TN220B - MSU SCAN PACK
   TN221 - SIGNAL DISTRIBUTE PACK
   TN328 - AUTOMATIC LINE INSULATION TEST - HIGH HUMIDITY
   TN329 - AUTOMATIC LINE INSULATION TEST - MID HUMIDITY
   TN330 - AUTOMATIC LINE INSULATION TEST - LOW HUMIDITY
   TN880 - GDX COMPENSATOR
   TN1040 - DISTRIBUTING FRAME TEST ACCESS CIRCUIT
   TN1538 - AUTOMATIC LINE INSULATION TEST - HIGH HUMIDITY
   TN1539 - AUTOMATIC LINE INSULATION TEST - MID HUMIDITY
   TN1540 - AUTOMATIC LINE INSULATION TEST - LOW HUMIDITY
   TN1613 - AUTOMATIC LINE INSULATION TEST - HIGH HUMIDITY
   TN1614 - AUTOMATIC LINE INSULATION TEST - MID HUMIDITY
   TN1615 - AUTOMATIC LINE INSULATION TEST - LOW HUMIDITY
   TN3288 - AUTOMATIC LINE INSULATION TEST - HIGH HUMIDITY
   TN329B - AUTOMATIC LINE INSULATION TEST - MID HUMIDITY
   TN330B - AUTOMATIC LINE INSULATION TEST - LOW HUMIDITY
   TN1636 - AUTOMATIC LINE INSULATION TEST - VERY HIGH HUMIDITY

SYMBOL NO. 8

SEE NOTE 1

DESIG: — EQPT LOC: 04-082 — CODE: SEE TABLE A — ELEM IDENT: A — OPT:

LEAD DESIG	FUNC	TERM. MOD	TERM.	TERM. OPT	DESTINATION	NOTE
NC	I		013			312
	I		014			312
	I		015			312
	I		036			312
	I		037			312
	I		038			312
	I		039			312
	I		040			312
	I		041			312
	I		042			312
	I		043			312
	I		113			312
	I		114			312
	I		115			312
	I		116			312
	I		117			312
	I		118			312
	I		119			312
	I		213			312
	I		214			312
	I		215			312
	I		216			312
	I		217			312
	I		218			312
	I		219			312
	I		220			312
	I		236			312
	I		237			312
	I		238			312
	I		239			312
	I		240			312
	I		241			312
	I		242			312
	I		243			312
	I		354			312
+5V0	IO		034		1/1	312
	IO		035		1/1	312
	IO		134		1/1	312
	IO		135		1/1	312
-48RTN01	IO		200		1/1	312
	IO		201		1/1	312
	IO		300		1/1	312
	IO		301		1/1	312
-48V01	IO		000		1/1	312
	IO		001		1/1	312
	IO		100		1/1	312
	IO		101		1/1	312
GRD04082	IO		021			312
	IO		032			312
	IO		121			312
	IO		221			312
	IO		224			312
	IO		232			312
	IO		234			312
	IO		235			312
	IO		321			312
	IO		324			312
	IO		332			312
	IO		334			312
	IO		335			312

SYMBOL NO. 8 (CONT)

SEE NOTE 1

DESIG: — EQPT LOC: 04-082 — CODE: SEE TABLE A — ELEM IDENT: A — OPT:

LEAD DESIG	FUNC	TERM. MOD	TERM.	TERM. OPT	DESTINATION	NOTE
0AR00L07	IO		004		TO DISTRIBUTING FRAME	312
0AR01L07	IO		005		TO DISTRIBUTING FRAME	312
0AR02L07	IO		006		TO DISTRIBUTING FRAME	312
0AR03L07	IO		007		TO DISTRIBUTING FRAME	312
0AR04L07	IO		008		TO DISTRIBUTING FRAME	312
0AR05L07	IO		009		TO DISTRIBUTING FRAME	312
0AR06L07	IO		010		TO DISTRIBUTING FRAME	312
0AR07L07	IO		011		TO DISTRIBUTING FRAME	312
0AR08L07	IO		045		TO DISTRIBUTING FRAME	312
0AR09L07	IO		046		TO DISTRIBUTING FRAME	312
0AR10L07	IO		047		TO DISTRIBUTING FRAME	312
0AR11L07	IO		048		TO DISTRIBUTING FRAME	312
0AR12L07	IO		049		TO DISTRIBUTING FRAME	312
0AR13L07	IO		050		TO DISTRIBUTING FRAME	312
0AR14L07	IO		051		TO DISTRIBUTING FRAME	312
0AR15L07	IO		052		TO DISTRIBUTING FRAME	312
0AR16L07	IO		204		TO DISTRIBUTING FRAME	312
0AR17L07	IO		205		TO DISTRIBUTING FRAME	312
0AR18L07	IO		206		TO DISTRIBUTING FRAME	312
0AR19L07	IO		207		TO DISTRIBUTING FRAME	312
0AR20L07	IO		208		TO DISTRIBUTING FRAME	312
0AR21L07	IO		209		TO DISTRIBUTING FRAME	312
0AR22L07	IO		210		TO DISTRIBUTING FRAME	312
0AR23L07	IO		211		TO DISTRIBUTING FRAME	312
0AR24L07	IO		245		TO DISTRIBUTING FRAME	312
0AR25L07	IO		246		TO DISTRIBUTING FRAME	312
0AR26L07	IO		247		TO DISTRIBUTING FRAME	312
0AR27L07	IO		248		TO DISTRIBUTING FRAME	312
0AR28L07	IO		249		TO DISTRIBUTING	312

PART OF FS 2
SYMBOL(S) 7 8

COPYRIGHT (C) 1988 AT&T
ALL RIGHTS RESERVED

MODULAR METALLIC SERVICE UNIT

DWG SIZE	ISSUE
C2	7B

AT&T	SD-5D015-01	B2CH

PART OF FS 2

EXTERNAL CONNECTIONS - SERVICE GROUP 0

SYMBOL NO. 8 (CONT)

SEE NOTE 1

DESIG	EQPT LOC	CODE	ELEM IDENT	OPT
	04-082	SEE TABLE A	A	

LEAD DESIG	FUNC	TERM. MOD	TERM.	TERM. OPT	DESTINATION	NOTE
					FRAME	
0AR29L07	IO		250		TO DISTRIBUTING FRAME	312
0AR30L07	IO		251		TO DISTRIBUTING FRAME	312
0AR31L07	IO		252		TO DISTRIBUTING FRAME	312
0ASW00	IO		222		3/1	312
0ASW01	IO		322		3/1	312
0AT00L07	IO		104		TO DISTRIBUTING FRAME	312
0AT01L07	IO		105		TO DISTRIBUTING FRAME	312
0AT02L07	IO		106		TO DISTRIBUTING FRAME	312
0AT03L07	IO		107		TO DISTRIBUTING FRAME	312
0AT04L07	IO		108		TO DISTRIBUTING FRAME	312
0AT05L07	IO		109		TO DISTRIBUTING FRAME	312
0AT06L07	IO		110		TO DISTRIBUTING FRAME	312
0AT07L07	IO		111		TO DISTRIBUTING FRAME	312
0AT08L07	IO		145		TO DISTRIBUTING FRAME	312
0AT09L07	IO		146		TO DISTRIBUTING FRAME	312
0AT10L07	IO		147		TO DISTRIBUTING FRAME	312
0AT11L07	IO		148		TO DISTRIBUTING FRAME	312
0AT12L07	IO		149		TO DISTRIBUTING FRAME	312
0AT13L07	IO		150		TO DISTRIBUTING FRAME	312
0AT14L07	IO		151		TO DISTRIBUTING FRAME	312
0AT15L07	IO		152		TO DISTRIBUTING FRAME	312
0AT16L07	IO		304		TO DISTRIBUTING FRAME	312
0AT17L07	IO		305		TO DISTRIBUTING FRAME	312
0AT18L07	IO		306		TO DISTRIBUTING FRAME	312
0AT19L07	IO		307		TO DISTRIBUTING FRAME	312
0AT20L07	IO		308		TO DISTRIBUTING FRAME	312
0AT21L07	IO		309		TO DISTRIBUTING FRAME	312
0AT22L07	IO		310		TO DISTRIBUTING FRAME	312
0AT23L07	IO		311		TO DISTRIBUTING FRAME	312
0AT24L07	IO		345		TO DISTRIBUTING FRAME	312
0AT25L07	IO		346		TO DISTRIBUTING FRAME	312
0AT26L07	IO		347		TO DISTRIBUTING FRAME	312
0AT27L07	IO		348		TO DISTRIBUTING FRAME	312
0AT28L07	IO		349		TO DISTRIBUTING FRAME	312

SYMBOL NO. 8 (CONT)

SEE NOTE 1

DESIG	EQPT LOC	CODE	ELEM IDENT	OPT
	04-082	SEE TABLE A	A	

LEAD DESIG	FUNC	TERM. MOD	TERM.	TERM. OPT	DESTINATION	NOTE
0AT29L07	IO		350		TO DISTRIBUTING FRAME	312
0AT30L07	IO		351		TO DISTRIBUTING FRAME	312
0AT31L07	IO		352		TO DISTRIBUTING FRAME	312
0A0000	IO		023		1/1	312
0A1000	IO		123		1/1	312
0A2000	IO		024		1/1	312
0A3000	IO		124		1/1	312
0A6000	IO		022		1/1	312
0A7000	IO		122		1/1	312
0B7000	IO		054		1/1	312
	IO		154		1/1	312
	IO		254		1/1	312
0CLK00	IO		333		1/1	312
0CURPRN	IO		012		1/1	312
0CURPRP	IO		112		1/1	312
0DRING	IO		323		3/1	312
0DWOUT0	IO		233		1/1	312
0EARTHG	IO		056		2/1	312
	IO		156		2/1	312
	IO		256		2/1	312
	IO		356		2/1	312
0JR00	IO		202		2/1	312
0JR01	IO		203		2/1	312
0JR02	IO		044		2/1	312
0JR03	IO		244		2/1	312
0JT00	IO		302		2/1	312
0JT01	IO		303		2/1	312
0JT02	IO		144		2/1	312
0JT03	IO		344		2/1	312
0READ0	IO		133		1/1	312
0SRVRQ07	IO		223		1/1	312
0WG1L0	IO		053		2/1	312
	IO		055		2/1	312
0WG2L0	IO		153		2/1	312
	IO		155		2/1	312
0WG3L0	IO		253		2/1	312
	IO		255		2/1	312
0WG4L0	IO		353		2/1	312
	IO		355		2/1	312
0WRITE0	IO		033		1/1	312

NOTE(S):

1. THE FOLLOWING ARE THE TITLES OF RESPECTIVE CIRCUIT PACK

   TN138 - METALLIC ACCESS BOARD
   TN220B - MSU SCAN PACK
   TN221 - SIGNAL DISTRIBUTE PACK
   TN328 - AUTOMATIC LINE INSULATION TEST - HIGH HUMIDITY
   TN329 - AUTOMATIC LINE INSULATION TEST - MID HUMIDITY
   TN330 - AUTOMATIC LINE INSULATION TEST - LOW HUMIDITY
   TN880 - GDX COMPENSATOR
   TN1040 - DISTRIBUTING FRAME TEST ACCESS CIRCUIT
   TN1538 - AUTOMATIC LINE INSULATION TEST - HIGH HUMIDITY
   TN1539 - AUTOMATIC LINE INSULATION TEST - MID HUMIDITY
   TN1540 - AUTOMATIC LINE INSULATION TEST - LOW HUMIDITY
   TN1613 - AUTOMATIC LINE INSULATION TEST - HIGH HUMIDITY
   TN1614 - AUTOMATIC LINE INSULATION TEST - MID HUMIDITY
   TN1615 - AUTOMATIC LINE INSULATION TEST - LOW HUMIDITY
   TN3288 - AUTOMATIC LINE INSULATION TEST - HIGH HUMIDITY
   TN3298 - AUTOMATIC LINE INSULATION TEST - MID HUMIDITY
   TN3308 - AUTOMATIC LINE INSULATION TEST - LOW HUMIDITY
   TN1636 - AUTOMATIC LINE INSULATION TEST - VERY HIGH HUMIDITY

PART OF FS 2
SYMBOL(S) 8

COPYRIGHT (C) 1988 AT&T
ALL RIGHTS RESERVED

MODULAR METALLIC SERVICE UNIT

DWG SIZE	ISSUE
C2	7B

AT&T	SD-5D015-01	B2CJ

PRINTED IN U.S.A.

PART OF FS 3

METALLIC TEST INTERCONNECTION BUS - SERVICE GROUP 0
(P/O INTERCONNECTION & FLOW DIAGRAM)

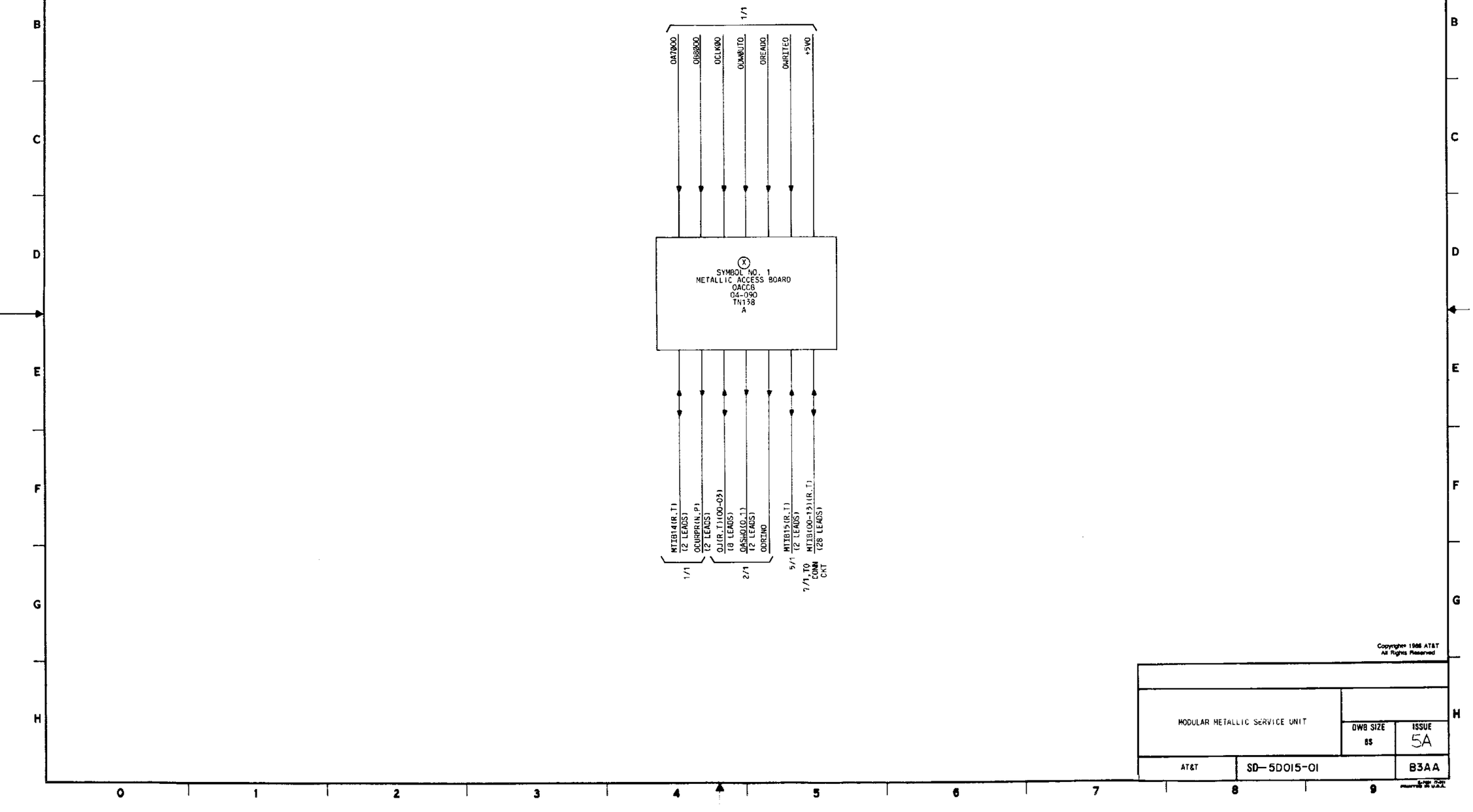

Copyright© 1988 AT&T
All Rights Reserved

MODULAR METALLIC SERVICE UNIT		DWG SIZE	ISSUE
		8S	5A
AT&T	SD-5D015-01		B3AA

PART OF FS 3

METALLIC TEST INTERCONNECTION BUS - SERVICE GROUP 0

SYMBOL NO. 1

METALLIC ACCESS BOARD

DESIG	EQPT LOC	CODE	ELEM IDENT	OPT
0ACC8	04-090	TN138	A	(X)

LEAD DESIG	FUNC	TERM. MOD	TERM.	TERM. OPT	DESTINATION	NOTE
NC	O	INT	223			
	I	MRST	354			
+5V0	PWR	+5	034		1/1	
	PWR	+5	035		1/1	
	PWR	+5	134		1/1	
	PWR	+5	135		1/1	
GRD04090	GRD	GRD	021			
	GRD	GRD	053			
	GRD	GRD	121			
	GRD	GRD	153			
	GRD	GRD	221			
	GRD	GRD	224			
	GRD	GRD	232			
	GRD	GRD	234			
	GRD	GRD	235			
	GRD	GRD	253			
	GRD	GRD	321			
	GRD	GRD	324			
	GRD	GRD	332			
	GRD	GRD	334			
	GRD	GRD	335			
	GRD	GRD	353			
MTIB00R	IO	AR16	204		7/1 TO CONN CKT	
MTIB00T	IO	AT16	304		7/1 TO CONN CKT	
MTIB01R	IO	AR17	205		7/1 TO CONN CKT	
MTIB01T	IO	AT17	305		7/1 TO CONN CKT	
MTIB02R	IO	AR18	206		7/1 TO CONN CKT	
MTIB02T	IO	AT18	306		7/1 TO CONN CKT	
MTIB03R	IO	AR19	207		7/1 TO CONN CKT	
MTIB03T	IO	AT19	307		7/1 TO CONN CKT	
MTIB04R	IO	AR20	208		7/1 TO CONN CKT	
MTIB04T	IO	AT20	308		7/1 TO CONN CKT	
MTIB05R	IO	AR21	209		7/1 TO CONN CKT	
MTIB05T	IO	AT21	309		7/1 TO CONN CKT	
MTIB06R	IO	AR22	210		7/1 TO CONN CKT	
MTIB06T	IO	AT22	310		7/1 TO CONN CKT	
MTIB07R	IO	AR23	211		7/1 TO CONN CKT	
MTIB07T	IO	AT23	311		7/1 TO CONN CKT	
MTIB08R	IO	AR24	245		7/1 TO CONN CKT	
MTIB08T	IO	AT24	345		7/1 TO CONN CKT	
MTIB09R	IO	AR25	246		7/1 TO CONN CKT	
MTIB09T	IO	AT25	346		7/1 TO CONN CKT	
MTIB10R	IO	AR26	247		7/1 TO CONN CKT	
MTIB10T	IO	AT26	347		7/1 TO CONN CKT	
MTIB11R	IO	AH27	248		7/1 TO CONN CKT	

SYMBOL NO. 1 (CONT)

METALLIC ACCESS BOARD

DESIG	EQPT LOC	CODE	ELEM IDENT	OPT
0ACC8	04-090	TN138	A	(X)

LEAD DESIG	FUNC	TERM. MOD	TERM.	TERM. OPT	DESTINATION	NOTE
MTIB11T	IO	AT27	348		7/1 TO CONN CKT	
MTIB12R	IO	AR28	249		7/1 TO CONN CKT	
MTIB12T	IO	AT28	349		7/1 TO CONN CKT	
MTIB13R	IO	AR29	250		7/1 TO CONN CKT	
MTIB13T	IO	AT29	350		7/1 TO CONN CKT	
MTIB14R	IO	AR30	251		1/1	
MTIB14T	IO	AT30	351		1/1	
MTIB15R	IO	AR31	252		5/1	
MTIB15T	IO	AT31	352		5/1	
0ASW00	O	ASW0	222		2/1,2/2 2/3,2/4 2/5,2/6 2/7,2/8 1/1	
0ASW01	O	ASW1	322		2/1,2/2 2/3,2/4 2/5,2/6 2/7,2/8 1/1	
0A7000	I	A3	123		1/1	
0B5000	I	B2	254		1/1	
0CLK00	I	CLK	333		1/1	
0CURPRN	OT	-CURPR	012		1/1	
0CURPRP	OT	+CURPR	112		1/1	
0DRIN0	O	DWOUT	323		2/1,2/2 2/3,2/4 2/5,2/6 2/7,2/8 1/1	
0DWOUT0	I	DRIN	233		1/1	
0JR00	IO	JR00	202		2/1	
0JR01	IO	JR01	203		2/1	
0JR02	IO	JR02	044		2/1	
0JR03	IO	JR03	244		2/1	
0JT00	IO	JT00	302		2/1	
0JT01	IO	JT01	303		2/1	
0JT02	IO	JT02	144		2/1	
0JT03	IO	JT03	344		2/1	
0READ0	I	READ	133		1/1	
0WRITE0	I	WRITE	033		1/1	

PART OF FS 3

SYMBOL(S) 1

COPYRIGHT (c) 1988 AT&T
ALL RIGHTS RESERVED

MODULAR METALLIC SERVICE UNIT

DWG SIZE	ISSUE
D	5A

AT&T	SD-5D015-01	B3CA

PART OF FS 4

POWER - SERVICE GROUP 0
(P/O INTERCONNECTION & FLOW DIAGRAM)

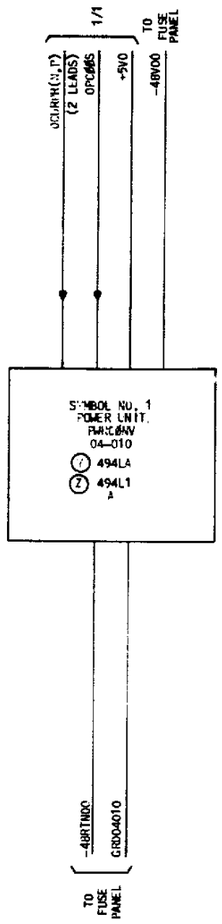

Copyright 1988 AT&T
All Rights Reserved

MODULAR METALLIC SERVICE UNIT		DWG SIZE B	ISSUE 5A
AT&T	SD-5D015-01		B4AA

PART OF FS 4

POWER - SERVICE GROUP 0

SYMBOL NO. 1

POWER UNIT

DESIG	EQPT LOC	CODE	ELEM IDENT	OPT
PWRCONV	04-010	494LA	A	(Y)
PWRCONV	04-010	494LT	A	(Z)

LEAD DESIG	FUNC	TERM. MOD	TERM.	TERM. OPT	DESTINATION	NOTE
NC	PWR	RS4	010			
	PWR	INT	012			
	PWR	ALM2	014			
	PWR	INT	112			
	PWR	ALM1	113			
+5V0	PWR	OOS(+)	015		1/1	
	PWR	VOUT1(+)	045		1/1	
	PWR	VOUT1(+)	046		1/1	
	PWR	VOUT1(+)	047		1/1	
	PWR	VOUT1(+)	048		1/1	
	PWR	VOUT1(+)	049		1/1	
	PWR	VOUT1(+)	050		1/1	
	PWR	VOUT1(+)	051		1/1	
	PWR	VOUT1(+)	052		1/1	
	PWR	VOUT1(+)	053		1/1	
	PWR	VOUT1(+)	054		1/1	
	PWR	VOUT1(+)	055		1/1	
	PWR	VOUT1(+)	056		1/1	
	PWR	SB(+)	118		1/1	
	PWR	VOUT1(+)	145		1/1	
	PWR	VOUT1(+)	146		1/1	
	PWR	VOUT1(+)	147		1/1	
	PWR	VOUT1(+)	148		1/1	
	PWR	VOUT1(+)	149		1/1	
	PWR	VOUT1(+)	150		1/1	
	PWR	VOUT1(+)	151		1/1	
	PWR	VOUT1(+)	152		1/1	
	PWR	VOUT1(+)	153		1/1	
	PWR	VOUT1(+)	154		1/1	
	PWR	VOUT1(+)	155		1/1	
	PWR	VOUT1(+)	156		1/1	
-48RTN00	GRD	VIN(+)	003			
	GRD	VIN(+)	004			
	GRD	VIN(+)	005			
	GRD	VIN(+)	102			
	GRD	VIN(+)	103			
	GRD	VIN(+)	104		TO FUSE PANEL	
-48V00	PWR	VIN(-)	006			
	PWR	VIN(-)	007			
	PWR	VIN(-)	008			
	PWR	VIN(-)	106			
	PWR	VIN(-)	107			
	PWR	VIN(-)	108		TO FUSE PANEL	
GRD04010	GRD	FRGRD	000		TO FUSE PANEL	
	GRD	FRGRD	001			
	GRD	VOUT1(-)	032			
	GRD	VOUT1(-)	033			
	GRD	VOUT1(-)	034			
	GRD	VOUT1(-)	035			
	GRD	VOUT1(-)	036			
	GRD	VOUT1(-)	037			
	GRD	VOUT1(-)	038			
	GRD	VOUT1(-)	039			
	GRD	VOUT1(-)	040			
	GRD	VOUT1(-)	041			
	GRD	VOUT1(-)	042			
	GRD	VOUT1(-)	043			
	GRD	FRGRD	100			
	GRD	FRGRD	101			
	GRD	S(-)	119			

SYMBOL NO. 1 (CONT)

POWER UNIT

DESIG	EQPT LOC	CODE	ELEM IDENT	OPT
PWRCONV	04-010	494LA	A	(Y)
PWRCONV	04-010	494LT	A	(Z)

LEAD DESIG	FUNC	TERM. MOD	TERM.	TERM. OPT	DESTINATION	NOTE
	GRD	VOUT1(-)	132			
	GRD	VOUT1(-)	133			
	GRD	VOUT1(-)	134			
	GRD	VOUT1(-)	135			
	GRD	VOUT1(-)	136			
	GRD	VOUT1(-)	137			
	GRD	VOUT1(-)	138			
	GRD	VOUT1(-)	139			
	GRD	VOUT1(-)	140			
	GRD	VOUT1(-)	141			
	GRD	VOUT1(-)	142			
	GRD	VOUT1(-)	143			
MINORON	GRD	VOUT2(-)	022			
	GRD	VOUT2(-)	023			
	GRD	VOUT2(-)	122			
MINOROP	PWR	VOUT2(+)	024			
	PWR	VOUT2(+)	123			
	PWR	VOUT2(+)	124			
OCURPRN	I	CP(-)	117		1/1	
OCURPRP	I	CP(+)	017		1/1	
OPCOOS	I	OOS(-)	115		1/1	
OSACS	I	SA(+)	018			
	I	SC(+)	019			
OS1S2	PWR	RS1	011	(T)	(T)4/1	313
OS2S3	I	RS2	110	(T)	(T)4/1	313
	I	RS3	109			

PART OF FS 4
SYMBOL(S) 1

COPYRIGHT © 1992 AT&T
ALL RIGHTS RESERVED

MODULAR METALLIC SERVICE UNIT

DWG SIZE	ISSUE
C2	8B

AT&T	SD-5DG15-01	B4CA

PRINTED IN U.S.A.

PART OF FS 5

DATA AND CONTROL - SERVICE GROUP 1
(P/O INTERCONNECTION & FLOW DIAGRAM)

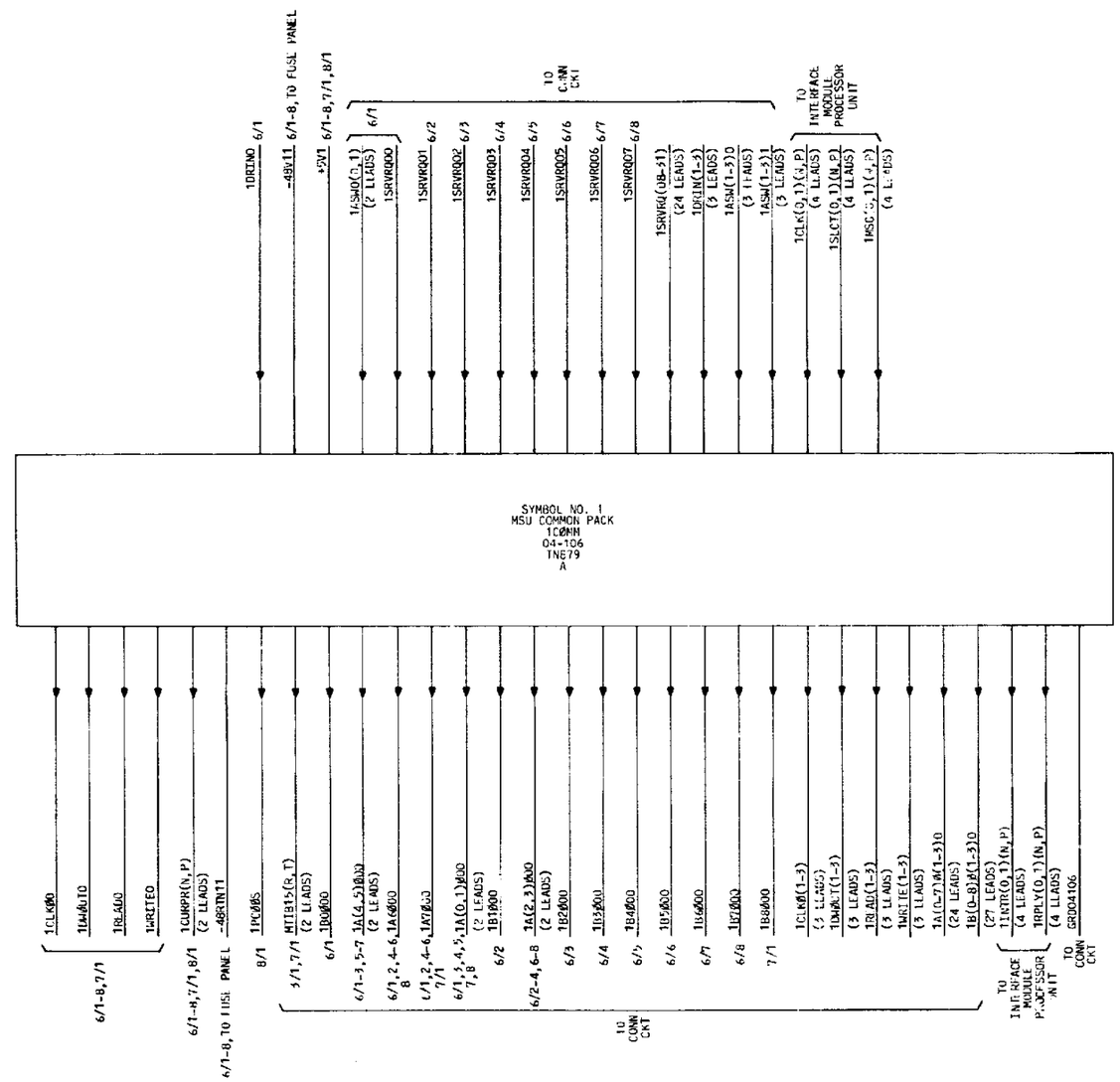

Copyright© 1988 AT&T
All Rights Reserved

MODULAR METALLIC SERVICE UNIT	DWG SIZE 6S	ISSUE 5A
AT&T	SD-5D015-01	B5AA

PART OF FS 5

DATA AND CONTROL - SERVICE GROUP 1

SYMBOL NO. 1

MSU COMMON PACK

DESIG	EQPT LOC	CODE	ELEM IDENT	OPT
1COMM	04-106	TN879	A	

LEAD DESIG	FUNC	TERM. MOD	TERM.	TERM. OPT	DESTINATION	NOTE
NC	GRD	MRST	233			
+5V1	PWR	+5	035		5/1	
	PWR	+5	134		5/1	
	PWR	+5	135		5/1	
	PWR	+5	034		7/1,8/1	
					6/1,6/2	
					6/3,6/4	
					6/5,6/6	
					6/7,6/8	
-48RTN11	GRD	-48RTN	201		5/1	
	GRD	-48RTN	300		5/1	
	GRD	-48RTN	301		5/1	
	GRD	-48RTN	200		6/1,6/2	
					6/3,6/4	
					6/5,6/6	
					6/7,6/8	
					TO FUSE PANEL	
-48V11	PWR	-48	001		5/1	
	PWR	-48	100		5/1	
	PWR	-48	101		5/1	
					TO FUSE PANEL	
	PWR	-48	000		6/1,6/2	
					6/3,6/4	
					6/5,6/6	
					6/7,6/8	
GRD04106	GRD	GRD	010			
	GRD	GRD	013			
	GRD	GRD	033			
	GRD	GRD	036			
	GRD	GRD	049			
	GRD	GRD	055			
	GRD	GRD	113			
	GRD	GRD	115			
	GRD	GRD	133			
	GRD	GRD	136			
	GRD	GRD	138			
	GRD	GRD	149			
	GRD	GRD	155			
	GRD	GRD	210			
	GRD	GRD	213			
	GRD	GRD	224		TO CONN CKT	
	GRD	GRD	234			
	GRD	GRD	235			
	GRD	GRD	236			
	GRD	GRD	247			
	GRD	GRD	249			
	GRD	GRD	255			
	GRD	GRD	313			
	GRD	GRD	315			
	GRD	GRD	334			
	GRD	GRD	335			
	GRD	GRD	336			
	GRD	GRD	338			
	GRD	GRD	349			
	GRD	GRD	355			
MTIB15R	0	MTIBR	212		3/1,7/1	
					TO CONN CKT	
MTIB15T	0	MTIBT	312		3/1,7/1	
					TO CONN CKT	
1ASM00	I	ASM00	011		7/1	
					TO CONN CKT	
1ASM01	I	ASM01	111		7/1	
					TO CONN CKT	
1ASM10	I	ASM10	211		TO CONN CKT	

SYMBOL NO. 1 (CONT)

MSU COMMON PACK

DESIG	EQPT LOC	CODE	ELEM IDENT	OPT
1COMM	04-106	TN879	A	

LEAD DESIG	FUNC	TERM. MOD	TERM.	TERM. OPT	DESTINATION	NOTE
1ASM11	I	ASM11	311		TO CONN CKT	
1ASM20	I	ASM20	232		TO CONN CKT	
1ASM21	I	ASM21	332		TO CONN CKT	
1ASM30	I	ASM30	248		TO CONN CKT	
1ASM31	I	ASM31	348		TO CONN CKT	
1A0000	O	A0000	002		6/1,6/3	
					6/4,6/5	
					6/7,6/8	
					TO CONN CKT	
1A0010	O	A0010	202		TO CONN CKT	
1A0020	O	A0020	021		TO CONN CKT	
1A0030	O	A0030	044		TO CONN CKT	
1A1000	O	A1000	003		6/1,6/3	
					6/4,6/5	
					6/7,6/8	
					TO CONN CKT	
1A1010	O	A1010	203		TO CONN CKT	
1A1020	O	A1020	022		TO CONN CKT	
1A1030	O	A1030	045		TO CONN CKT	
1A2000	O	A2000	004		6/2,6/3	
					6/4,6/6	
					6/7,6/8	
1A2010	O	A2010	204		TO CONN CKT	
					TO CONN CKT	
1A2020	O	A2020	023		TO CONN CKT	
1A2030	O	A2030	046		TO CONN CKT	
1A3000	O	A3000	005		6/2,6/3	
					6/4,6/6	
					6/7,6/8	
					TO CONN CKT	
1A3010	O	A3010	205		TO CONN CKT	
1A3020	O	A3020	024		TO CONN CKT	
1A3030	O	A3030	047		TO CONN CKT	
1A4000	O	A4000	006		6/1,6/2	
					6/3,6/5	
					6/6,6/7	
					TO CONN CKT	
1A4010	O	A4010	206		TO CONN CKT	
1A4020	O	A4020	052		TO CONN CKT	
1A4030	O	A4030	048		TO CONN CKT	
1A5000	O	A5000	007		6/1,6/2	
					6/3,6/5	
					6/6,6/7	
					TO CONN CKT	
1A5010	O	A5010	207		TO CONN CKT	
1A5020	O	A5020	221		TO CONN CKT	
1A5030	O	A5030	244		TO CONN CKT	
1A6000	O	A6000	008		6/1,6/2	
					6/4,6/5	
					6/6,6/8	
					TO CONN CKT	
1A6010	O	A6010	208		TO CONN CKT	
1A6020	O	A6020	222		TO CONN CKT	
1A6030	O	A6030	245		TO CONN CKT	
1A7000	O	A7000	009		6/1,6/2	
					6/4,6/5	
					6/6,6/8	
					7/1	
1A7010	O	A7010	209		TO CONN CKT	
1A7020	O	A7020	223		TO CONN CKT	
1A7030	O	A7030	246		TO CONN CKT	
1B0000	O	B0000	102		6/1	
1B0010	O	B0010	302		TO CONN CKT	
					TO CONN CKT	

SYMBOL NO. 1 (CONT)

MSU COMMON PACK

DESIG	EQPT LOC	CODE	ELEM IDENT	OPT
1COMM	04-106	TN879	A	

LEAD DESIG	FUNC	TERM. MOD	TERM.	TERM. OPT	DESTINATION	NOTE
1B0020	O	B0020	121		TO CONN CKT	
1B0030	O	B0030	144		TO CONN CKT	
1B1000	O	B1000	103		6/2	
					TO CONN CKT	
1B1010	O	B1010	305		TO CONN CKT	
1B1020	O	B1020	122		TO CONN CKT	
1B1030	O	B1030	145		TO CONN CKT	
1B2000	O	B2000	104		6/3	
					TO CONN CKT	
1B2010	O	B2010	304		TO CONN CKT	
1B2020	O	B2020	123		TO CONN CKT	
1B2030	O	B2030	146		TO CONN CKT	
1B3000	O	B3000	105		6/4	
					TO CONN CKT	
1B3010	O	B3010	305		TO CONN CKT	
1B3020	O	B3020	124		TO CONN CKT	
1B3030	O	B3030	147		TO CONN CKT	
1B4000	O	B4000	106		6/5	
					TO CONN CKT	
1B4010	O	B4010	306		TO CONN CKT	
1B4020	O	B4020	132		TO CONN CKT	
1B4030	O	B4030	148		TO CONN CKT	
1B5000	O	B5000	107		6/6	
					TO CONN CKT	
1B5010	O	B5010	307		TO CONN CKT	
1B5020	O	B5020	321		TO CONN CKT	
1B5030	O	B5030	344		TO CONN CKT	
1B6000	O	B6000	108		6/7	
					TO CONN CKT	
1B6010	O	B6010	308		TO CONN CKT	
1B6020	O	B6020	322		TO CONN CKT	
1B6030	O	B6030	345		TO CONN CKT	
1B7000	O	B7000	109		6/8	
					TO CONN CKT	
1B7010	O	B7010	309		TO CONN CKT	
1B7020	O	B7020	323		TO CONN CKT	
1B7030	O	B7030	346		TO CONN CKT	
1B8000	O	B8000	110		7/1	
					TO CONN CKT	
1B8010	O	B8010	310		TO CONN CKT	
1B8020	O	B8020	324		TO CONN CKT	
1B8030	O	B8030	347		TO CONN CKT	
1CLK00	O	CLK00	116		6/1,6/2	
					6/3,6/4	
					6/5,6/6	
					6/7,6/8	
					7/1	
1CLK01	O	CLK01	139		TO CONN CKT	
1CLK02	O	CLK02	316		TO CONN CKT	
1CLK03	O	CLK03	339		TO CONN CKT	
1CLK0M	I	CLK0M	252		TO INTERFACE MODULE PROCESSOR UNIT	
1CLK0P	I	CLK0P	352		TO INTERFACE MODULE PROCESSOR UNIT	
1CLK1N	I	CLK1N	052		TO INTERFACE MODULE PROCESSOR UNIT	
1CLK1P	I	CLK1P	152		TO INTERFACE MODULE PROCESSOR UNIT	
1CURPRN	OT I	-CURPR	012		7/1	
					6/1,6/2	
					6/3,6/4	
					6/5,6/6	
					6/7,6/8	
					8/1	

SYMBOL NO. 1 (CONT)

MSU COMMON PACK

DESIG	EQPT LOC	CODE	ELEM IDENT	OPT
1COMM	04-106	TN879	A	

LEAD DESIG	FUNC	TERM. MOD	TERM.	TERM. OPT	DESTINATION	NOTE
1CURPRP	OT I	+CURPR	112		7/1	
					6/1,6/2	
					6/3,6/4	
					6/5,6/6	
					6/7,6/8	
1DRIN0	I	DRIN0	014		8/1	
					7/1	
1DRIN1	I	DRIN1	037		TO CONN CKT	
1DRIN2	I	DRIN2	214		TO CONN CKT	
1DRIN3	I	DRIN3	237		TO CONN CKT	
1DWOUT0	O	DW00	114		6/1,6/2	
					6/3,6/4	
					6/5,6/6	
					6/7,6/8	
					7/1	
1DWOUT1	O	DW01	137		TO CONN CKT	
1DWOUT2	O	DW02	314		TO CONN CKT	
1DWOUT3	O	DW03	337		TO CONN CKT	
1INTR0N	O	INTR0N	250		TO INTERFACE MODULE PROCESSOR UNIT	
1INTR0P	O	INTR0P	350		TO INTERFACE MODULE PROCESSOR UNIT	
1INTR1N	O	INTR1N	050		TO INTERFACE MODULE PROCESSOR UNIT	
1INTR1P	O	INTR1P	150		TO INTERFACE MODULE PROCESSOR UNIT	
1MSG0N	I	MSG0N	253		TO INTERFACE MODULE PROCESSOR UNIT	
1MSG0P	I	MSG0P	353		TO INTERFACE MODULE PROCESSOR UNIT	
1MSG1N	I	MSG1N	053		TO INTERFACE MODULE PROCESSOR UNIT	
1MSG1P	I	MSG1P	153		TO INTERFACE MODULE PROCESSOR UNIT	
1PC00S	O	PC00S	333		8/1	
1READ0	O	RD00	016		6/1,6/2	
					6/3,6/4	
					6/5,6/6	
					6/7,6/8	
					7/1	
1READ1	O	RD10	039		TO CONN CKT	
1READ2	O	RD20	216		TO CONN CKT	
1READ3	O	RD30	239		TO CONN CKT	
1RPLY0N	O	RPLY0N	254		TO INTERFACE MODULE PROCESSOR UNIT	
1RPLY0P	O	RPLY0P	354		TO INTERFACE MODULE PROCESSOR UNIT	
1RPLY1N	O	RPLY1N	054		TO INTERFACE	

PART OF FS 5
SYMBOL(S) 1

COPYRIGHT © 1992 AT&T
ALL RIGHTS RESERVED

MODULAR METALLIC SERVICE UNIT

DWG SIZE	ISSUE
D2	8B

AT&T	SD-5D015-01	B5CA

PRINTED IN U.S.A.

PART OF FS 5

DATA AND CONTROL - SERVICE GROUP 1

SYMBOL NO. 1 (CONT)

MSU COMMON PACK

DESIG	EQPT LOC	CODE	ELEM IDENT	OPT
1COMM	04-106	TN879	A	

LEAD DESIG	FUNC	TERM. MOD	TERM.	TERM. OPT	DESTINATION	NOTE
1RPLY1P	O	RPLY1P	154		MODULE PROCESSOR UNIT TO INTERFACE MODULE PROCESSOR UNIT	
1SLCTON	I	SLCTON	251		TO INTERFACE MODULE PROCESSOR UNIT	
1SLCTOP	I	SLCTOP	351		TO INTERFACE MODULE PROCESSOR UNIT	
1SLCT1N	I	SLCT1N	051		TO INTERFACE MODULE PROCESSOR UNIT	
1SLCT1P	I	SLCT1P	151		TO INTERFACE MODULE PROCESSOR UNIT	
1SRVR000	I	SRV000	017		6/1 TO CONN CKT	
1SRVR001	I	SRV001	117		6/2 TO CONN CKT	
1SRVR002	I	SRV002	018		6/3 TO CONN CKT	
1SRVR003	I	SRV003	118		6/4 TO CONN CKT	
1SRVR004	I	SRV004	019		6/5 TO CONN CKT	
1SRVR005	I	SRV005	119		6/6 TO CONN CKT	
1SRVR006	I	SRV006	020		6/7 TO CONN CKT	
1SRVR007	I	SRV007	120		6/8 TO CONN CKT	
1SRVR008	I	SRV008	040		TO CONN CKT	
1SRVR009	I	SRV009	140		TO CONN CKT	
1SRVR010	I	SRV010	041		TO CONN CKT	
1SRVR011	I	SRV011	141		TO CONN CKT	
1SRVR012	I	SRV012	042		TO CONN CKT	
1SRVR013	I	SRV013	142		TO CONN CKT	
1SRVR014	I	SRV014	043		TO CONN CKT	
1SRVR015	I	SRV015	143		TO CONN CKT	
1SRVR016	I	SRV016	217		TO CONN CKT	
1SRVR017	I	SRV017	317		TO CONN CKT	
1SRVR018	I	SRV018	218		TO CONN CKT	
1SRVR019	I	SRV019	318		TO CONN CKT	
1SRVR020	I	SRV020	219		TO CONN CKT	
1SRVR021	I	SRV021	319		TO CONN CKT	
1SRVR022	I	SRV022	220		TO CONN CKT	
1SRVR023	I	SRV023	320		TO CONN CKT	
1SRVR024	I	SRV024	240		TO CONN CKT	
1SRVR025	I	SRV025	340		TO CONN CKT	
1SRVR026	I	SRV026	241		TO CONN CKT	
1SRVR027	I	SRV027	341		TO CONN CKT	
1SRVR028	I	SRV028	242		TO CONN CKT	
1SRVR029	I	SRV029	342		TO CONN CKT	
1SRVR030	I	SRV030	243		TO CONN CKT	
1SRVR031	I	SRV031	343		TO CONN CKT	
1WRITE0	O	WD00	015		6/1,6/2 6/3,6/4 6/5,6/6 6/7,6/8 7/1	
1WRITE1	O	WD10	038		TO CONN CKT	
1WRITE2	O	WD20	215		TO CONN CKT	

SYMBOL NO. 1 (CONT)

MSU COMMON PACK

DESIG	EQPT LOC	CODE	ELEM IDENT	OPT
1COMM	04-106	TN879	A	

LEAD DESIG	FUNC	TERM. MOD	TERM.	TERM. OPT	DESTINATION	NOTE
1WRITE3	O	WD30	258		TO CONN CKT	

PART OF FS 5
SYMBOL(S) 1

COPYRIGHT © 1992 AT&T
ALL RIGHTS RESERVED

MODULAR METALLIC SERVICE UNIT

DWG SIZE: D

ISSUE: 8B

AT&T

SD-5D015-01

B5CB

PRINTED IN U.S.A.

PART OF FS 6

EXTERNAL CONNECTIONS - SERVICE GROUP 1
(P/O INTERCONNECTION & FLOW DIAGRAM)

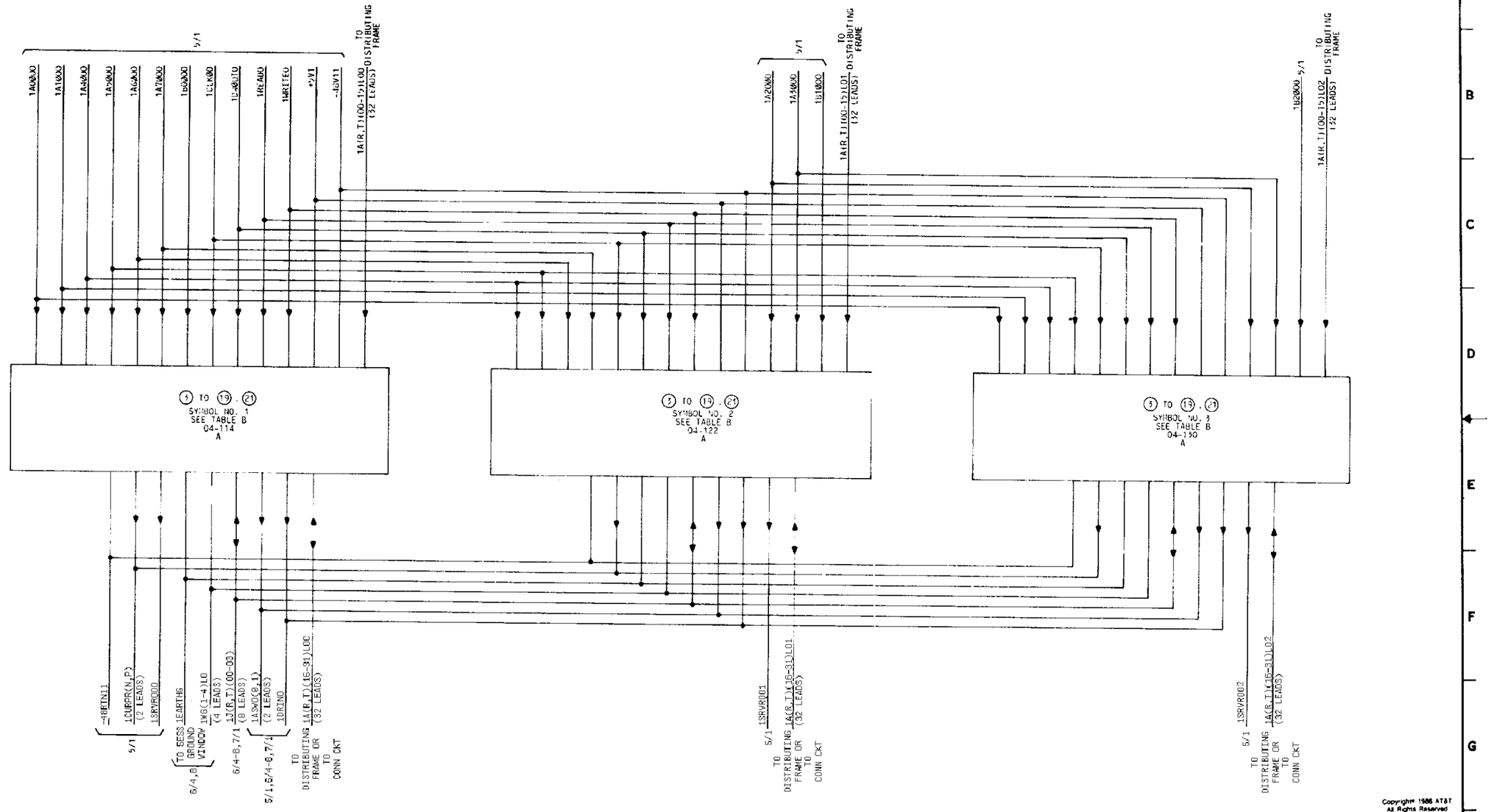

Copyright© 1986 AT&T
All Rights Reserved

MODULAR METALLIC SERVICE UNIT		DWG SIZE: B5	ISSUE: 7B
AT&T	SD-5D015-01		B6AA

PRINTED IN U.S.A.

PART OF FS 6

EXTERNAL CONNECTIONS - SERVICE GROUP 1
(P/O INTERCONNECTION & FLOW DIAGRAM)

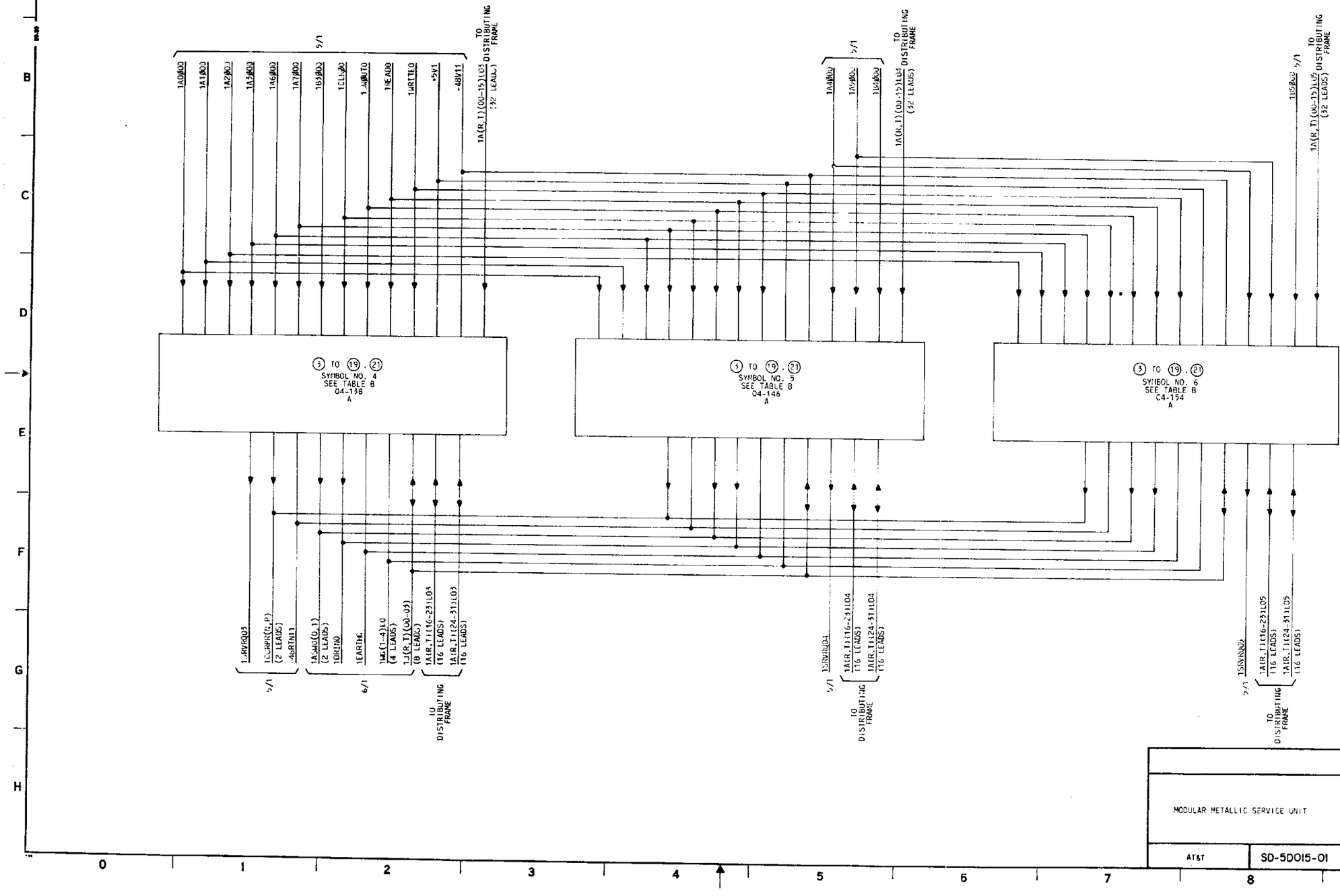

Copyright© 1968 AT&T
All Rights Reserved

MODULAR METALLIC SERVICE UNIT	DWG SIZE 65	ISSUE 7B
AT&T	SD-5D015-01	B6AB

PART OF FS 6

EXTERNAL CONNECTIONS - SERVICE GROUP 1
(P/O INTERCONNECTION & FLOW DIAGRAM)

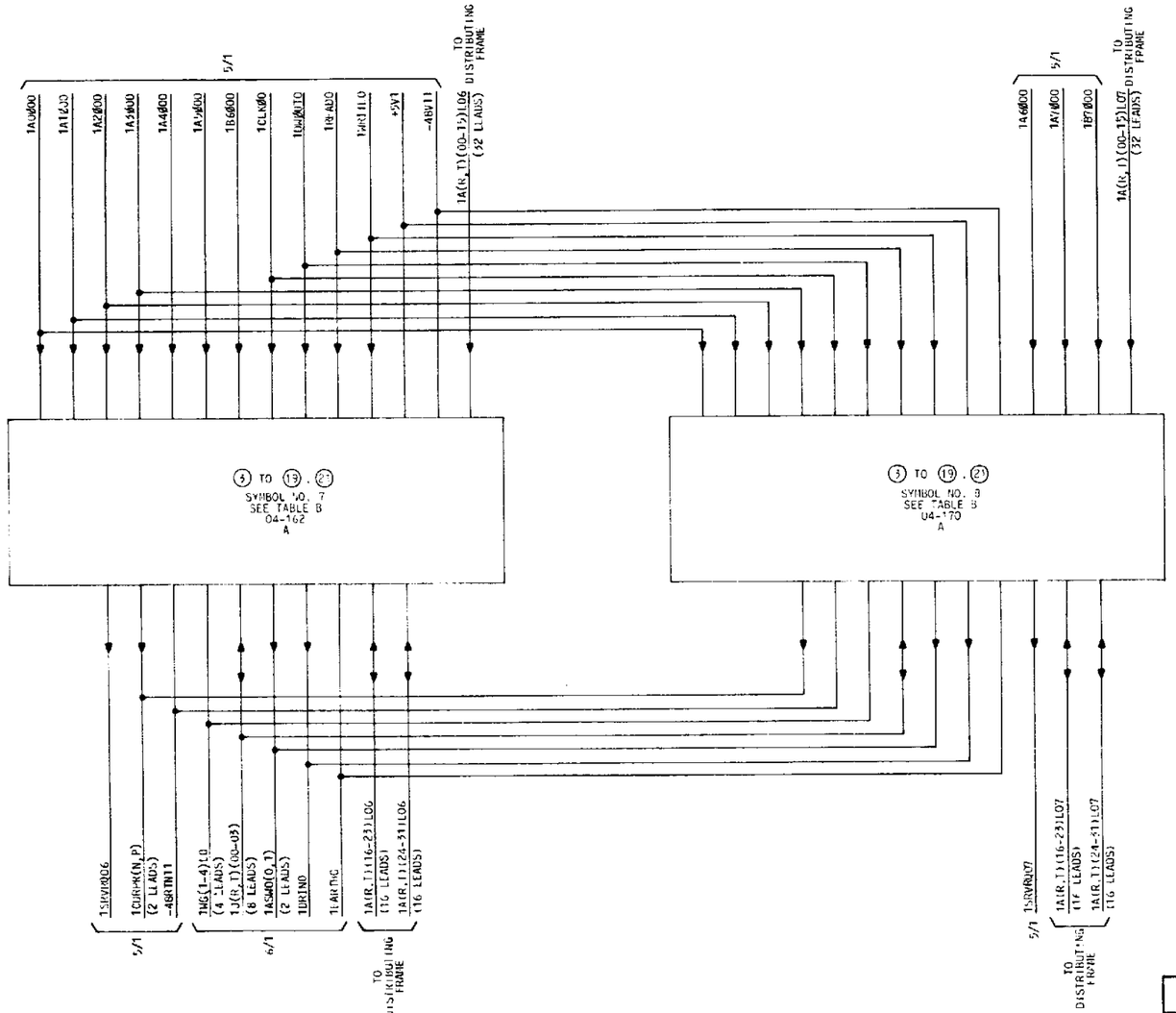

Copyright 1988 AT&T
All Rights Reserved

MODULAR METALLIC SERVICE UNIT	DWG SIZE 8S	ISSUE 7B
AT&T SD-5D015-01		B6AC

PART OF FS 6

EXTERNAL CONNECTIONS - SERVICE GROUP 1
(P/O INTERCONNECTION & FLOW DIAGRAM)

TABLE B

OPT. (APP FIG. NO.)	COMPCODE	SYMBOL NO. 1 04-114	SYMBOL NO. 2 04-122	SYMBOL NO. 3 04-130	SYMBOL NO. 4 04-138	SYMBOL NO. 5 04-146	SYMBOL NO. 6 04-154	SYMBOL NO. 7 04-162	SYMBOL NO. 8 04-170
		DESIG	DESIG	DESIG	DESIG	DESIG	DESIG	DESIG	DESIG
3	TN138	1ACC0	1ACC1	1ACC2	1ACC3	1ACC4	1ACC5	1ACC6	1ACC7
4	TN220B	1SCAN0	1SCAN1	1SCAN2	1SCAN3	1SCAN4	1SCAN5	1SCAN6	1SCAN7
5	TN221	1SD0	1SD1	1SD2	1SD3	1SD4	1SD5	1SD6	1SD7
6	TN328	1ALITH0	1ALITH1	1ALITH2	1ALITH3	1ALITH4	1ALITH5	1ALITH6	1ALITH7
7	TN329	1ALITM0	1ALITM1	1ALITM2	1ALITM3	1ALITM4	1ALITM5	1ALITM6	1ALITM7
8	TN330	1ALITL0	1ALITL1	1ALITL2	1ALITL3	1ALITL4	1ALITL5	1ALITL6	1ALITL7
9	TN880	1GDX0	1GDX1	1GDX2	1GDX3	1GDX4	1GDX5	1GDX6	1GDX7
10	TN1040	1DFTAC0	1DFTAC1	1DFTAC2	1DFTAC3	1DFTAC4	1DFTAC5	1DFTAC6	1DFTAC7
11	TN1538	1ALITOXH0	1ALITOXH1	1ALITOXH2	1ALITOXH3	1ALITOXH4	1ALITOXH5	1ALITOXH6	1ALITOXH7
12	TN1539	1ALITOXM0	1ALITOXM1	1ALITOXM2	1ALITOXM3	1ALITOXM4	1ALITOXM5	1ALITOXM6	1ALITOXM7
13	TN1540	1ALITOXL0	1ALITOXL1	1ALITOXL2	1ALITOXL3	1ALITOXL4	1ALITOXL5	1ALITOXL6	1ALITOXL7
14	TN1613	1ALIT1XH0	1ALIT1XH1	1ALIT1XH2	1ALIT1XH3	1ALIT1XH4	1ALIT1XH5	1ALIT1XH6	1ALIT1XH7
15	TN1614	1ALIT1XM0	1ALIT1XM1	1ALIT1XM2	1ALIT1XM3	1ALIT1XM4	1ALIT1XM5	1ALIT1XM6	1ALIT1XM7
16	TN1615	1ALIT1XL0	1ALIT1XL1	1ALIT1XL2	1ALIT1XL3	1ALIT1XL4	1ALIT1XL5	1ALIT1XL6	1ALIT1XL7
17	TN328B	1ALITH0	1ALITH1	1ALITH2	1ALITH3	1ALITH4	1ALITH5	1ALITH6	1ALITH7
18	TN329B	1ALITM0	1ALITM1	1ALITM2	1ALITM3	1ALITM4	1ALITM5	1ALITM6	1ALITM7
19	TN330B	1ALITL0	1ALITL1	1ALITL2	1ALITL3	1ALITL4	1ALITL5	1ALITL6	1ALITL7
21	TN1636	1ALITT0	1ALITT1	1ALITT2	1ALITT3	1ALITT4	1ALITT5	1ALITT6	1ALITT7

Copyright 1998 AT&T
All Rights Reserved

MODULAR METALLIC SERVICE UNIT

DWG SIZE 8S

ISSUE 7B

AT&T SD-50015-01

SHEET B6AD

PRINTED IN U.S.A.

PART OF FS 6

EXTERNAL CONNECTIONS - SERVICE GROUP 1

SYMBOL NO. 1

SEE NOTE 1

DESIG	EQPT LOC	CODE	ELEM IDENT	OPT
	04-114	SEE TABLE B	A	

LEAD DESIG	FUNC	TERM. MOD	TERM.	TERM. OPT	DESTINATION	NOTE
NC	I		013			312
	I		014			312
	I		015			312
	I		036			312
	I		037			312
	I		038			312
	I		039			312
	I		040			312
	I		041			312
	I		042			312
	I		043			312
	I		113			312
	I		114			312
	I		115			312
	I		116			312
	I		117			312
	I		118			312
	I		119			312
	I		213			312
	I		214			312
	I		215			312
	I		216			312
	I		217			312
	I		218			312
	I		219			312
	I		220			312
	I		236			312
	I		237			312
	I		238			312
	I		239			312
	I		240			312
	I		241			312
	I		242			312
	I		243			312
	I		354			312
+5V1	IO		034	5/1		312
	IO		035	5/1		312
	IO		134	5/1		312
	IO		135	5/1		312
-48RTN11	IO		200	5/1		312
	IO		201	5/1		312
	IO		300	5/1		312
	IO		301	5/1		312
-48V11	IO		000	5/1		312
	IO		001	5/1		312
	IO		100	5/1		312
	IO		101	5/1		312
GRD04114	IO		021			312
	IO		032			312
	IO		121			312
	IO		221			312
	IO		224			312
	IO		232			312
	IO		234			312
	IO		235			312
	IO		321			312
	IO		324			312
	IO		332			312
	IO		334			312
	IO		335			312

SYMBOL NO. 1 (CONT)

SEE NOTE 1

DESIG	EQPT LOC	CODE	ELEM IDENT	OPT
	04-114	SEE TABLE B	A	

LEAD DESIG	FUNC	TERM. MOD	TERM.	TERM. OPT	DESTINATION	NOTE
1AR00L00	IO		004		TO DISTRIBUTING FRAME	312
1AR01L00	IO		005		TO DISTRIBUTING FRAME	312
1AR02L00	IO		006		TO DISTRIBUTING FRAME	312
1AR03L00	IO		007		TO DISTRIBUTING FRAME	312
1AR04L00	IO		008		TO DISTRIBUTING FRAME	312
1AR05L00	IO		009		TO DISTRIBUTING FRAME	312
1AR06L00	IO		010		TO DISTRIBUTING FRAME	312
1AR07L00	IO		011		TO DISTRIBUTING FRAME	312
1AR08L00	IO		045		TO DISTRIBUTING FRAME	312
1AR09L00	IO		046		TO DISTRIBUTING FRAME	312
1AR10L00	IO		047		TO DISTRIBUTING FRAME	312
1AR11L00	IO		048		TO DISTRIBUTING FRAME	312
1AR12L00	IO		049		TO DISTRIBUTING FRAME	312
1AR13L00	IO		050		TO DISTRIBUTING FRAME	312
1AR14L00	IO		051		TO DISTRIBUTING FRAME	312
1AR15L00	IO		052		TO DISTRIBUTING FRAME	312
1AR16L00	IO		204		TO DISTRIBUTING FRAME OR TO CONN CKT	312
1AR17L00	IO		205		TO DISTRIBUTING FRAME OR TO CONN CKT	312
1AR18L00	IO		206		TO DISTRIBUTING FRAME OR TO CONN CKT	312
1AR19L00	IO		207		TO DISTRIBUTING FRAME OR TO CONN CKT	312
1AR20L00	IO		208		TO DISTRIBUTING FRAME OR TO CONN CKT	312
1AR21L00	IO		209		TO DISTRIBUTING FRAME OR TO CONN CKT	312
1AR22L00	IO		210		TO DISTRIBUTING FRAME OR TO CONN CKT	312
1AR23L00	IO		211		TO DISTRIBUTING FRAME OR TO CONN CKT	312
1AR24L00	IO		245		TO DISTRIBUTING FRAME OR TO CONN CKT	312
1AR25L00	IO		246		TO DISTRIBUTING FRAME OR TO CONN CKT	312
1AR26L00	IO		247		TO DISTRIBUTING FRAME OR TO CONN CKT	312
1AR27L00	IO		248		TO DISTRIBUTING FRAME OR TO CONN CKT	312
1AR28L00	IO		249		TO DISTRIBUTING FRAME OR TO CONN CKT	312
1AR29L00	IO		250		TO DISTRIBUTING FRAME OR	312

SYMBOL NO. 1 (CONT)

SEE NOTE 1

DESIG	EQPT LOC	CODE	ELEM IDENT	OPT
	04-114	SEE TABLE B	A	

LEAD DESIG	FUNC	TERM. MOD	TERM.	TERM. OPT	DESTINATION	NOTE
					TO CONN CKT	
1AR30L00	IO		251		TO DISTRIBUTING FRAME OR TO CONN CKT	312
1AR31L00	IO		252		TO DISTRIBUTING FRAME	108,312
1ASW00	IO		222		7/1	312
1ASW01	IO		322		7/1	312
1AT00L00	IC		104		TO DISTRIBUTING FRAME	312
1AT01L00	IO		105		TO DISTRIBUTING FRAME	312
1AT02L00	IO		106		TO DISTRIBUTING FRAME	312
1AT03L00	IO		107		TO DISTRIBUTING FRAME	312
1AT04L00	IO		108		TO DISTRIBUTING FRAME	312
1AT05L00	IO		109		TO DISTRIBUTING FRAME	312
1AT06L00	IO		110		TO DISTRIBUTING FRAME	312
1AT07L00	IO		111		TO DISTRIBUTING FRAME	312
1AT08L00	IO		145		TO DISTRIBUTING FRAME	312
1AT09L00	IO		146		TO DISTRIBUTING FRAME	312
1AT10L00	IO		147		TO DISTRIBUTING FRAME	312
1AT11L00	IO		148		TO DISTRIBUTING FRAME	312
1AT12L00	IO		149		TO DISTRIBUTING FRAME	312
1AT13L00	IO		150		TO DISTRIBUTING FRAME	312
1AT14L00	IO		151		TO DISTRIBUTING FRAME	312
1AT15L00	IO		152		TO DISTRIBUTING FRAME	312
1AT16L00	IO		304		TO DISTRIBUTING FRAME OR TO CONN CKT	312
1AT17L00	IO		305		TO DISTRIBUTING FRAME OR TO CONN CKT	312
1AT18L00	IO		306		TO DISTRIBUTING FRAME OR TO CONN CKT	312
1AT19L00	IO		307		TO DISTRIBUTING FRAME OR TO CONN CKT	312
1AT20L00	IO		308		TO DISTRIBUTING FRAME OR TO CONN CKT	312
1AT21L00	IO		309		TO DISTRIBUTING FRAME OR TO CONN CKT	312
1AT22L00	IO		310		TO DISTRIBUTING FRAME OR TO CONN CKT	312
1AT23L00	IO		311		TO DISTRIBUTING FRAME OR TO CONN CKT	312
1AT24L00	IO		345		TO DISTRIBUTING FRAME OR TO CONN CKT	312
1AT25L00	IO		346		TO DISTRIBUTING FRAME OR TO CONN CKT	312

SYMBOL NO. 1 (CONT)

SEE NOTE 1

DESIG	EQPT LOC	CODE	ELEM IDENT	OPT
	04-114	SEE TABLE B	A	

LEAD DESIG	FUNC	TERM. MOD	TERM.	TERM. OPT	DESTINATION	NOTE
1AT26L00	IO		347		TO DISTRIBUTING FRAME OR TO CONN CKT	312
1AT27L00	IO		348		TO DISTRIBUTING FRAME OR TO CONN CKT	312
1AT28L00	IO		349		TO DISTRIBUTING FRAME OR TO CONN CKT	312
1AT29L00	IO		350		TO DISTRIBUTING FRAME OR TO CONN CKT	312
1AT30L00	IO		351		TO DISTRIBUTING FRAME OR TO CONN CKT	312
1AT31L00	IO		352		TO DISTRIBUTING FRAME	108,312
1A0000	ID		024		5/1	312
1A1000	ID		124		5/1	312
1A4000	ID		022		5/1	312
1A5000	ID		122		5/1	312
1A6000	ID		023		5/1	312
1A7000	ID		123		5/1	312
1B0000	ID		054		5/1	312
	ID		154		5/1	312
	ID		254		5/1	312
1CLK00	IO		333		5/1	312
1CURPRN	IO		012		5/1	312
1CURPRP	IO		112		5/1	312
1DRIN0	IO		323		7/1	312
1DWOUT0	IO		233		5/1	312
1EARTHG	IO		056		6/1	312
	IO		156		6/1	312
	IO		356		6/1	312
	IO		256		6/2,6/3 6/4,6/5 6/6,6/7 6/8 TO SESS GROUND WINDOW	312
1JR00	IO		202		6/2,6/3 6/4,6/5 6/6,6/7 6/8,7/1	312
1JR01	IO		203		6/2,6/3 6/4,6/5 6/6,6/7 6/8,7/1	312
1JR02	IO		044		6/2,6/3 6/4,6/5 6/6,6/7 6/8,7/1	312
1JR03	IO		244		6/2,6/3 6/4,6/5 6/6,6/7 6/8,7/1	312
1JT00	IO		302		6/2,6/3	312

PART OF FS 6

SYMBOL(S) 1

COPYRIGHT (C) 1988 AT&T
ALL RIGHTS RESERVED

MODULAR METALLIC SERVICE UNIT

DWG SIZE: C2

ISSUE: 7B

AT&T

SD-5D015-01

B6CA

PART OF FS 6

EXTERNAL CONNECTIONS - SERVICE GROUP 1

SYMBOL NO. 1 (CONT)

SEE NOTE 1

DESIG: — EQPT LOC: 04-114 — CODE: SEE TABLE B — ELEM IDENT: A — OPT:

LEAD DESIG	FUNC	TERM. MOD	TERM.	TERM. OPT	DESTINATION	NOTE
					6/4,6/5	
					6/6,6/7	
					6/8,7/1	
1JT01	IO		303		6/2,6/3	312
					6/4,6/5	
					6/6,6/7	
					6/8,7/1	
1JT02	IO		144		6/2,6/3	312
					6/4,6/5	
					6/6,6/7	
					6/8,7/1	
1JT03	IO		344		6/2,6/3	312
					6/4,6/5	
					6/6,6/7	
					6/8,7/1	
1READ0	IO		133		5/1	312
1SRVRQ00	IO		223		5/1	312
1WG1L0	IO		053		6/1	312
	IO		055		6/2,6/3	312
					6/4,6/5	
					6/6,6/7	
					6/8	
1WG2L0	IO		153		6/1	312
	IO		155		6/2,6/3	312
					6/4,6/5	
					6/6,6/7	
					6/8	
1WG3L0	IO		255		6/1	312
	IO		253		6/2,6/3	312
					6/4,6/5	
					6/6,6/7	
					6/8	
1WG4L0	IO		355		6/1	312
	IO		353		6/2,6/3	312
					6/4,6/5	
					6/6,6/7	
					6/8	
1WRITE0	IO		033		5/1	312

NOTE(S):

1. THE FOLLOWING ARE THE TITLES OF RESPECTIVE CIRCUIT PACK

TN138 - METALLIC ACCESS BOARD
TN220B - MSU SCAN PACK
TN221 - SIGNAL DISTRIBUTE PACK
TN328 - AUTOMATIC LINE INSULATION TEST - HIGH HUMIDITY
TN329 - AUTOMATIC LINE INSULATION TEST - MID HUMIDITY
TN330 - AUTOMATIC LINE INSULATION TEST - LOW HUMIDITY
TN880 - GDX COMPENSATOR
TN1040 - DISTRIBUTING FRAME TEST ACCESS CIRCUIT
TN1538 - AUTOMATIC LINE INSULATION TEST - HIGH HUMIDITY
TN1539 - AUTOMATIC LINE INSULATION TEST - MID HUMIDITY
TN1540 - AUTOMATIC LINE INSULATION TEST - LOW HUMIDITY
TN1613 - AUTOMATIC LINE INSULATION TEST - HIGH HUMIDITY
TN1614 - AUTOMATIC LINE INSULATION TEST - MID HUMIDITY
TN1615 - AUTOMATIC LINE INSULATION TEST - LOW HUMIDITY
TN328B - AUTOMATIC LINE INSULATION TEST - HIGH HUMIDITY
TN329B - AUTOMATIC LINE INSULATION TEST - MID HUMIDITY
TN330B - AUTOMATIC LINE INSULATION TEST - LOW HUMIDITY
TN1636 - AUTOMATIC LINE INSULATION TEST - VERY HIGH HUMIDITY

SYMBOL NO. 2

SEE NOTE 1

DESIG: — EQPT LOC: 04-122 — CODE: SEE TABLE B — ELEM IDENT: A — OPT:

LEAD DESIG	FUNC	TERM. MOD	TERM.	TERM. OPT	DESTINATION	NOTE
NC	I		013			312
	I		014			312
	I		015			312
	I		036			312
	I		037			312
	I		038			312
	I		039			312
	I		040			312
	I		041			312
	I		042			312
	I		043			312
	I		113			312
	I		114			312
	I		115			312
	I		116			312
	I		117			312
	I		118			312
	I		119			312
	I		213			312
	I		214			312
	I		215			312
	I		216			312
	I		217			312
	I		218			312
	I		219			312
	I		220			312
	I		236			312
	I		237			312
	I		238			312
	I		239			312
	I		240			312
	I		241			312
	I		242			312
	I		243			312
	I		354			312
+5V1	IO		034		5/1	312
	IO		035		5/1	312
	IO		134		5/1	312
	IO		135		5/1	312
-48RTN11	IO		200		5/1	312
	IO		201		5/1	312
	IO		300		5/1	312
	IO		301		5/1	312
-48V11	IO		000		5/1	312
	IO		001		5/1	312
	IO		100		5/1	312
	IO		101		5/1	312
GRD04122	IO		021			312
	IO		032			312
	IO		121			312
	IO		221			312
	IO		224			312
	IO		232			312
	IO		234			312
	IO		235			312
	IO		321			312
	IO		324			312
	IO		332			312
	IO		334			312
	IO		335			312

SYMBOL NO. 2 (CONT)

SEE NOTE 1

DESIG: — EQPT LOC: 04-122 — CODE: SEE TABLE B — ELEM IDENT: A — OPT:

LEAD DESIG	FUNC	TERM. MOD	TERM.	TERM. OPT	DESTINATION	NOTE
1AR00L01	IO		004		TO DISTRIBUTING FRAME	312
1AR01L01	IO		005		TO DISTRIBUTING FRAME	312
1AR02L01	IO		006		TO DISTRIBUTING FRAME	312
1AR03L01	IO		007		TO DISTRIBUTING FRAME	312
1AR04L01	IO		008		TO DISTRIBUTING FRAME	312
1AR05L01	IO		009		TO DISTRIBUTING FRAME	312
1AR06L01	IO		010		TO DISTRIBUTING FRAME	312
1AR07L01	IO		011		TO DISTRIBUTING FRAME	312
1AR08L01	IO		045		TO DISTRIBUTING FRAME	312
1AR09L01	IO		046		TO DISTRIBUTING FRAME	312
1AR10L01	IO		047		TO DISTRIBUTING FRAME	312
1AR11L01	IO		048		TO DISTRIBUTING FRAME	312
1AR12L01	IO		049		TO DISTRIBUTING FRAME	312
1AR13L01	IO		050		TO DISTRIBUTING FRAME	312
1AR14L01	IO		051		TO DISTRIBUTING FRAME	312
1AR15L01	IO		052		TO DISTRIBUTING FRAME	312
1AR16L01	IO		204		TO DISTRIBUTING FRAME OR TO CONN CKT	312
1AR17L01	IO		205		TO DISTRIBUTING FRAME OR TO CONN CKT	312
1AR18L01	IO		206		TO DISTRIBUTING FRAME OR TO CONN CKT	312
1AR19L01	IO		207		TO DISTRIBUTING FRAME OR TO CONN CKT	312
1AR20L01	IO		208		TO DISTRIBUTING FRAME OR TO CONN CKT	312
1AR21L01	IO		209		TO DISTRIBUTING FRAME OR TO CONN CKT	312
1AR22L01	IO		210		TO DISTRIBUTING FRAME OR TO CONN CKT	312
1AR23L01	IO		211		TO DISTRIBUTING FRAME OR TO CONN CKT	312
1AR24L01	IO		245		TO DISTRIBUTING FRAME OR TO CONN CKT	312
1AR25L01	IO		246		TO DISTRIBUTING FRAME OR TO CONN CKT	312
1AR26L01	IO		247		TO DISTRIBUTING FRAME OR TO CONN CKT	312
1AR27L01	IO		248		TO DISTRIBUTING FRAME OR TO CONN CKT	312
1AR28L01	IO		249		TO DISTRIBUTING FRAME OR TO CONN CKT	312
1AR29L01	IO		250		TO DISTRIBUTING FRAME OR	312

SYMBOL NO. 2 (CONT)

SEE NOTE 1

DESIG: — EQPT LOC: 04-1ZZ — CODE: SEE TABLE B — ELEM IDENT: A — OPT:

LEAD DESIG	FUNC	TERM. MOD	TERM.	TERM. OPT	DESTINATION	NOTE
					TO CONN CKT	
1AR30L01	IO		251		TO DISTRIBUTING FRAME OR TO CONN CKT	312
1AR31L01	IO		252		TO DISTRIBUTING FRAME	108,312
1ASW00	IO		222		7/1	312
1ASW01	IO		322		7/1	312
1AT00L01	IO		104		TO DISTRIBUTING FRAME	312
1AT01L01	IO		105		TO DISTRIBUTING FRAME	312
1AT02L01	IO		106		TO DISTRIBUTING FRAME	312
1AT03L01	IO		107		TO DISTRIBUTING FRAME	312
1AT04L01	IO		108		TO DISTRIBUTING FRAME	312
1AT05L01	IO		109		TO DISTRIBUTING FRAME	312
1AT06L01	IO		110		TO DISTRIBUTING FRAME	312
1AT07L01	IO		111		TO DISTRIBUTING FRAME	312
1AT08L01	IO		145		TO DISTRIBUTING FRAME	312
1AT09L01	IO		146		TO DISTRIBUTING FRAME	312
1AT10L01	IO		147		TO DISTRIBUTING FRAME	312
1AT11L01	IO		148		TO DISTRIBUTING FRAME	312
1AT12L01	IO		149		TO DISTRIBUTING FRAME	312
1AT13L01	IO		150		TO DISTRIBUTING FRAME	312
1AT14L01	IO		151		TO DISTRIBUTING FRAME	312
1AT15L01	IO		152		TO DISTRIBUTING FRAME	312
1AT16L01	IO		304		TO DISTRIBUTING FRAME OR TO CONN CKT	312
1AT17L01	IO		305		TO DISTRIBUTING FRAME OR TO CONN CKT	312
1AT18L01	IO		306		TO DISTRIBUTING FRAME OR TO CONN CKT	312
1AT19L01	IO		307		TO DISTRIBUTING FRAME OR TO CONN CKT	312
1AT20L01	IO		308		TO DISTRIBUTING FRAME OR TO CONN CKT	312
1AT21L01	IO		309		TO DISTRIBUTING FRAME OR	312

PART OF FS 6
SYMBOL(S) 1 2

COPYRIGHT (c) 1988 AT&T
ALL RIGHTS RESERVED

MODULAR METALLIC SERVICE UNIT

DWG SIZE: D2 — ISSUE: 7B

AT&T — SD-5D015-01 — B6CB

PART OF FS 6

EXTERNAL CONNECTIONS - SERVICE GROUP 1

SYMBOL NO. 2 (CONT)

SEE NOTE 1

DESIG	EQPT LOC	CODE	ELEM IDENT	OPT
	04-122	SEE TABLE B	A	

LEAD DESIG	FUNC	TERM. MOD	TERM.	TERM. OPT	DESTINATION	NOTE
1AT22L01	IO		310		TO CONN CKT TO DISTRIBUTING FRAME OR TO CONN CKT	312
1AT23L01	IO		311		TO DISTRIBUTING FRAME OR TO CONN CKT	312
1AT24L01	IO		345		TO DISTRIBUTING FRAME OR TO CONN CKT	312
1AT25L01	IO		346		TO DISTRIBUTING FRAME OR TO CONN CKT	312
1AT26L01	IO		347		TO DISTRIBUTING FRAME OR TO CONN CKT	312
1AT27L01	IO		348		TO DISTRIBUTING FRAME OR TO CONN CKT	312
1AT28L01	IO		349		TO DISTRIBUTING FRAME OR TO CONN CKT	312
1AT29L01	IO		350		TO DISTRIBUTING FRAME OR TO CONN CKT	312
1AT30L01	IO		351		TO DISTRIBUTING FRAME OR TO CONN CKT	312
1AT31L01	IO		352		TO DISTRIBUTING FRAME	108,312
1A2000	IO		022		5/1	312
1A3000	IO		122		5/1	312
1A4000	IO		023		5/1	312
1A5000	IO		123		5/1	312
1A6000	IO		024		5/1	312
1A7000	IO		124		5/1	312
1B1000	IO		054		5/1	312
	IO		154		5/1	312
	IO		254		5/1	312
1CLK00	IO		333		5/1	312
1CURPRN	IO		012		5/1	312
1CURPRP	IO		112		5/1	312
1DRIN0	IO		323		7/1	312
1DWOUT0	IO		233		5/1	312
1EARTHG	IO		056		6/1	312
	IO		156		6/1	312
	IO		256		6/1	312
	IO		356		6/1	312
1JR00	IO		202		6/1	312
1JR01	IO		203		6/1	312
1JR02	IO		044		6/1	312
1JR03	IO		244		6/1	312
1JT00	IO		302		6/1	312
1JT01	IO		303		6/1	312
1JT02	IO		144		6/1	312
1JT03	IO		344		6/1	312
1READ0	IO		133		5/1	312
1SRVR001	IO		223		5/1	312
1WG1L0	IO		053		6/1	312
	IO		055		6/1	312
1WG2L0	IO		153		6/1	312
	IO		155		6/1	312
1WG3L0	IO		253		6/1	312

SYMBOL NO. 2 (CONT)

SEE NOTE 1

DESIG	EQPT LOC	CODE	ELEM IDENT	OPT
	04-122	SEE TABLE B	A	

LEAD DESIG	FUNC	TERM. MOD	TERM.	TERM. OPT	DESTINATION	NOTE
	IO		255		6/1	312
1WG4L0	IO		353		6/1	312
	IO		355		6/1	312
1WRITE0	IO		033		5/1	312

NOTE(S):

1. THE FOLLOWING ARE THE TITLES OF RESPECTIVE CIRCUIT PACK

   TN138 - METALLIC ACCESS BOARD
   TN220B - MSU SCAN PACK
   TN221 - SIGNAL DISTRIBUTE PACK
   TN328 - AUTOMATIC LINE INSULATION TEST - HIGH HUMIDITY
   TN329 - AUTOMATIC LINE INSULATION TEST - MID HUMIDITY
   TN330 - AUTOMATIC LINE INSULATION TEST - LOW HUMIDITY
   TN680 - GDX COMPENSATOR
   TN1040 - DISTRIBUTING FRAME TEST ACCESS CIRCUIT
   TN1538 - AUTOMATIC LINE INSULATION TEST - HIGH HUMIDITY
   TN1539 - AUTOMATIC LINE INSULATION TEST - MID HUMIDITY
   TN1540 - AUTOMATIC LINE INSULATION TEST - LOW HUMIDITY
   TN1613 - AUTOMATIC LINE INSULATION TEST - HIGH HUMIDITY
   TN1614 - AUTOMATIC LINE INSULATION TEST - MID HUMIDITY
   TN1615 - AUTOMATIC LINE INSULATION TEST - LOW HUMIDITY
   TN328B - AUTOMATIC LINE INSULATION TEST - HIGH HUMIDITY
   TN329B - AUTOMATIC LINE INSULATION TEST - MID HUMIDITY
   TN330B - AUTOMATIC LINE INSULATION TEST - LOW HUMIDITY
   TN1636 - AUTOMATIC LINE INSULATION TEST - VERY HIGH HUMIDITY

SYMBOL NO. 3

SEE NOTE 1

DESIG	EQPT LOC	CODE	ELEM IDENT	OPT
	04-130	SEE TABLE B	A	

LEAD DESIG	FUNC	TERM. MOD	TERM.	TERM. OPT	DESTINATION	NOTE
NC	I		013			312
	I		014			312
	I		015			312
	I		036			312
	I		037			312
	I		038			312
	I		039			312
	I		040			312
	I		041			312
	I		042			312
	I		043			312
	I		113			312
	I		114			312
	I		115			312
	I		116			312
	I		117			312
	I		118			312
	I		119			312
	I		213			312
	I		214			312
	I		215			312
	I		216			312
	I		217			312
	I		218			312

SYMBOL NO. 3 (CONT)

SEE NOTE 1

DESIG	EQPT LOC	CODE	ELEM IDENT	OPT
	04-130	SEE TABLE B	A	

LEAD DESIG	FUNC	TERM. MOD	TERM.	TERM. OPT	DESTINATION	NOTE
	I		219			312
	I		220			312
	I		236			312
	I		237			312
	I		238			312
	I		239			312
	I		240			312
	I		241			312
	I		242			312
	I		243			312
	I		354			312
+5V1	IO		034		5/1	312
	IO		035		5/1	312
	IO		134		5/1	312
	IO		135		5/1	312
-48RTN11	IO		200		5/1	312
	IO		201		5/1	312
	IO		300		5/1	312
	IO		301		5/1	312
-48V11	IO		000		5/1	312
	IO		001		5/1	312
	IO		100		5/1	312
	IO		101		5/1	312
GRD04130	IO		021			312
	IO		032			312
	IO		121			312
	IO		221			312
	IO		224			312
	IO		232			312
	IO		234			312
	IO		235			312
	IO		321			312
	IO		324			312
	IO		332			312
	IO		334			312
	IO		335			312
1AR00L02	IO		004		TO DISTRIBUTING FRAME	312
1AR01L02	IO		005		TO DISTRIBUTING FRAME	312
1AR02L02	IO		006		TO DISTRIBUTING FRAME	312
1AR03L02	IO		007		TO DISTRIBUTING FRAME	312
1AR04L02	IO		008		TO DISTRIBUTING FRAME	312
1AR05L02	IO		009		TO DISTRIBUTING FRAME	312
1AR06L02	IO		010		TO DISTRIBUTING FRAME	312
1AR07L02	IO		011		TO DISTRIBUTING FRAME	312
1AR08L02	IO		045		TO DISTRIBUTING FRAME	312
1AR09L02	IO		046		TO DISTRIBUTING FRAME	312
1AR10L02	IO		047		TO DISTRIBUTING FRAME	312
1AR11L02	IO		048		TO DISTRIBUTING FRAME	312
1AR12L02	IO		049		TO DISTRIBUTING FRAME	312
1AR13L02	IO		050		TO DISTRIBUTING FRAME	312
1AR14L02	IO		051		TO DISTRIBUTING FRAME	312

SYMBOL NO. 3 (CONT)

SEE NOTE 1

DESIG	EQPT LOC	CODE	ELEM IDENT	OPT
	04-130	SEE TABLE B	A	

LEAD DESIG	FUNC	TERM. MOD	TERM.	TERM. OPT	DESTINATION	NOTE
1AR15L02	IO		052		TO DISTRIBUTING FRAME	312
1AR16L02	IO		204		TO DISTRIBUTING FRAME OR TO CONN CKT	312
1AR17L02	IO		205		TO DISTRIBUTING FRAME OR TO CONN CKT	312
1AR18L02	IO		206		TO DISTRIBUTING FRAME OR TO CONN CKT	312
1AR19L02	IO		207		TO DISTRIBUTING FRAME OR TO CONN CKT	312
1AR20L02	IO		208		TO DISTRIBUTING FRAME OR TO CONN CKT	312
1AR21L02	IO		209		TO DISTRIBUTING FRAME OR TO CONN CKT	312
1AR22L02	IO		210		TO DISTRIBUTING FRAME OR TO CONN CKT	312
1AR23L02	IO		211		TO DISTRIBUTING FRAME OR TO CONN CKT	312
1AR24L02	IO		245		TO DISTRIBUTING FRAME OR TO CONN CKT	312
1AR25L02	IO		246		TO DISTRIBUTING FRAME OR TO CONN CKT	312
1AR26L02	IO		247		TO DISTRIBUTING FRAME OR TO CONN CKT	312
1AR27L02	IO		248		TO DISTRIBUTING FRAME OR TO CONN CKT	312
1AR28L02	IO		249		TO DISTRIBUTING FRAME OR TO CONN CKT	312
1AR29L02	IO		250		TO DISTRIBUTING FRAME OR TO CONN CKT	312
1AR30L02	IO		251		TO DISTRIBUTING FRAME OR TO CONN CKT	312
1AR31L02	IO		252		TO DISTRIBUTING FRAME	108,312
1ASW00	IO		222		7/1	312
1ASW01	IO		322		7/1	312
1AT00L02	IO		104		TO DISTRIBUTING FRAME	312
1AT01L02	IO		105		TO DISTRIBUTING FRAME	312
1AT02L02	IO		106		TO DISTRIBUTING FRAME	312
1AT03L02	IO		107		TO DISTRIBUTING FRAME	312

PART OF FS 6
SYMBOL(S) 2 3

COPYRIGHT (C) 1988 AT&T
ALL RIGHTS RESERVED

MODULAR METALLIC SERVICE UNIT

DWG SIZE: D2
ISSUE: 7B

AT&T | SD-5D015-01 | B6CC

PART OF FS 6

EXTERNAL CONNECTIONS - SERVICE GROUP 1

SYMBOL NO. 3 (CONT)

SEE NOTE 1

DESIG	EQPT LOC	CODE	ELEM IDENT	OPT
	04-130	SEE TABLE B	A	

LEAD DESIG	FUNC	TERM. MOD	TERM.	TERM. OPT	DESTINATION	NOTE
1AT04L02	IO		108		TO DISTRIBUTING FRAME	312
1AT05L02	IO		109		TO DISTRIBUTING FRAME	312
1AT06L02	IO		110		TO DISTRIBUTING FRAME	312
1AT07L02	IO		111		TO DISTRIBUTING FRAME	312
1AT08L02	IO		145		TO DISTRIBUTING FRAME	312
1AT09L02	IO		146		TO DISTRIBUTING FRAME	312
1AT10L02	IO		147		TO DISTRIBUTING FRAME	312
1AT11L02	IO		148		TO DISTRIBUTING FRAME	312
1AT12L02	IO		149		TO DISTRIBUTING FRAME	312
1AT13L02	IO		150		TO DISTRIBUTING FRAME	312
1AT14L02	IO		151		TO DISTRIBUTING FRAME	312
1AT15L02	IO		152		TO DISTRIBUTING FRAME	312
1AT16L02	IO		304		TO DISTRIBUTING FRAME OR TO CONN CKT	312
1AT17L02	IO		305		TO DISTRIBUTING FRAME OR TO CONN CKT	312
1AT18L02	IO		306		TO DISTRIBUTING FRAME OR TO CONN CKT	312
1AT19L02	IO		307		TO DISTRIBUTING FRAME OR TO CONN CKT	312
1AT20L02	IO		308		TO DISTRIBUTING FRAME OR TO CONN CKT	312
1AT21L02	IO		309		TO DISTRIBUTING FRAME OR TO CONN CKT	312
1AT22L02	IO		310		TO DISTRIBUTING FRAME OR TO CONN CKT	312
1AT23L02	IO		311		TO DISTRIBUTING FRAME OR TO CONN CKT	312
1AT24L02	IO		345		TO DISTRIBUTING FRAME OR TO CONN CKT	312
1AT25L02	IO		346		TO DISTRIBUTING FRAME OR TO CONN CKT	312
1AT26L02	IO		347		TO DISTRIBUTING FRAME OR TO CONN CKT	312
1AT27L02	IO		348		TO DISTRIBUTING FRAME OR TO CONN CKT	312
1AT28L02	IO		349		TO DISTRIBUTING FRAME OR TO CONN CKT	312
1AT29L02	IO		350		TO DISTRIBUTING FRAME OR TO CONN CKT	312
1AT30L02	IO		351		TO DISTRIBUTING FRAME OR TO CONN CKT	312
1AT31L02	IO		352		TO DISTRIBUTING FRAME	108,312

SYMBOL NO. 3 (CONT)

SEE NOTE 1

DESIG	EQPT LOC	CODE	ELEM IDENT	OPT
	04-130	SEE TABLE B	A	

LEAD DESIG	FUNC	TERM. MOD	TERM.	TERM. OPT	DESTINATION	NOTE
1A0000	IO		022		5/1	312
1A1000	IO		122		5/1	312
1A2000	IO		023		5/1	312
1A3000	IO		123		5/1	312
1A4000	IO		024		5/1	312
1A5000	IO		124		5/1	312
1B2000	IO		054		5/1	312
	IO		154		5/1	312
	IO		254		5/1	312
1CLK00	IO		333		5/1	312
1CURPRN	IO		012		5/1	312
1CURPRP	IO		112		5/1	312
1DRIN0	IO		323		7/1	312
1DWOUT0	IO		233		5/1	312
1EARTHG	IO		056		6/1	312
	IO		156		6/1	312
	IO		256		6/1	312
	IO		356		6/1	312
1JR00	IO		202		6/1	312
1JR01	IO		203		6/1	312
1JR02	IO		044		6/1	312
1JR03	IO		244		6/1	312
1JT00	IO		302		6/1	312
1JT01	IO		303		6/1	312
1JT02	IO		144		6/1	312
1JT03	IO		344		6/1	312
1READ0	IO		133		5/1	312
1SRVRQ02	IO		223		5/1	312
1WG1L0	IO		053		6/1	312
	IO		055		6/1	312
1WG2L0	IO		153		6/1	312
	IO		155		6/1	312
1WG3L0	IO		253		6/1	312
	IO		255		6/1	312
1WG4L0	IO		353		6/1	312
	IO		355		6/1	312
1WRITE0	IO		033		5/1	312

NOTE(S):

1. THE FOLLOWING ARE THE TITLES OF RESPECTIVE CIRCUIT PACK

   TN138 - METALLIC ACCESS BOARD
   TN2208 - MSU SCAN PACK
   TN221 - SIGNAL DISTRIBUTE PACK
   TN328 - AUTOMATIC LINE INSULATION TEST - HIGH HUMIDITY
   TN329 - AUTOMATIC LINE INSULATION TEST - MID HUMIDITY
   TN330 - AUTOMATIC LINE INSULATION TEST - LOW HUMIDITY
   TN880 - GDX COMPENSATOR
   TN1040 - DISTRIBUTING FRAME TEST ACCESS CIRCUIT
   TN1538 - AUTOMATIC LINE INSULATION TEST - HIGH HUMIDITY
   TN1539 - AUTOMATIC LINE INSULATION TEST - MID HUMIDITY
   TN1540 - AUTOMATIC LINE INSULATION TEST - LOW HUMIDITY
   TN1613 - AUTOMATIC LINE INSULATION TEST - HIGH HUMIDITY
   TN1614 - AUTOMATIC LINE INSULATION TEST - MID HUMIDITY
   TN1615 - AUTOMATIC LINE INSULATION TEST - LOW HUMIDITY
   TN3288 - AUTOMATIC LINE INSULATION TEST - HIGH HUMIDITY
   TN3298 - AUTOMATIC LINE INSULATION TEST - MID HUMIDITY
   TN3308 - AUTOMATIC LINE INSULATION TEST - LOW HUMIDITY
   TN1636 - AUTOMATIC LINE INSULATION TEST - VERY HIGH HUMIDITY

SYMBOL NO. 4

SEE NOTE 1

DESIG	EQPT LOC	CODE	ELEM IDENT	OPT
	04-138	SEE TABLE B	A	

LEAD DESIG	FUNC	TERM. MOD	TERM.	TERM. OPT	DESTINATION	NOTE
NC	I		013			312
	I		014			312
	I		015			312
	I		036			312
	I		037			312
	I		038			312
	I		039			312
	I		040			312
	I		041			312
	I		042			312
	I		043			312
	I		113			312
	I		114			312
	I		115			312
	I		116			312
	I		117			312
	I		118			312
	I		119			312
	I		Z13			312
	I		Z14			312
	I		Z15			312
	I		Z16			312
	I		Z17			312
	I		Z18			312
	I		Z19			312
	I		Z20			312
	I		Z36			312
	I		Z37			312
	I		Z38			312
	I		Z39			312
	I		Z40			312
	I		Z41			312
	I		Z42			312
	I		Z43			312
	I		354			312
+5V1	IO		034		5/1	312
	IO		035		5/1	312
	IO		134		5/1	312
	IO		135		5/1	312
-48RTN11	IO		200		5/1	312
	IO		201		5/1	312
	IO		300		5/1	312
	IO		301		5/1	312
-48V11	IO		000		5/1	312
	IO		001		5/1	312
	IO		100		5/1	312
	IO		101		5/1	312
GRD04138	IO		021			312
	IO		032			312
	IO		121			312
	IO		221			312
	IO		224			312
	IO		232			312
	IO		234			312
	IO		235			312
	IO		321			312
	IO		324			312
	IO		332			312
	IO		334			312
	IO		335			312

SYMBOL NO. 4 (CONT)

SEE NOTE 1

DESIG	EQPT LOC	CODE	ELEM IDENT	OPT
	04-138	SEE TABLE B	A	

LEAD DESIG	FUNC	TERM. MOD	TERM.	TERM. OPT	DESTINATION	NOTE
1AR00L03	IO		004		TO DISTRIBUTING FRAME	312
1AR01L03	IO		005		TO DISTRIBUTING FRAME	312
1AR02L03	IO		006		TO DISTRIBUTING FRAME	312
1AR03L03	IO		007		TO DISTRIBUTING FRAME	312
1AR04L03	IO		008		TO DISTRIBUTING FRAME	312
1AR05L03	IO		009		TO DISTRIBUTING FRAME	312
1AR06L03	IO		010		TO DISTRIBUTING FRAME	312
1AR07L03	IO		011		TO DISTRIBUTING FRAME	312
1AR08L03	IO		045		TO DISTRIBUTING FRAME	312
1AR09L03	IO		046		TO DISTRIBUTING FRAME	312
1AR10L03	IO		047		TO DISTRIBUTING FRAME	312
1AR11L03	IO		048		TO DISTRIBUTING FRAME	312
1AR12L03	IO		049		TO DISTRIBUTING FRAME	312
1AR13L03	IO		050		TO DISTRIBUTING FRAME	312
1AR14L03	IO		051		TO DISTRIBUTING FRAME	312
1AR15L03	IO		052		TO DISTRIBUTING FRAME	312
1AR16L03	IO		204		TO DISTRIBUTING FRAME	312
1AR17L03	IO		205		TO DISTRIBUTING FRAME	312
1AR18L03	IO		206		TO DISTRIBUTING FRAME	312
1AR19L03	IO		207		TO DISTRIBUTING FRAME	312
1AR20L03	IO		208		TO DISTRIBUTING FRAME	312
1AR21L03	IO		209		TO DISTRIBUTING FRAME	312
1AR22L03	IO		210		TO DISTRIBUTING FRAME	312
1AR23L03	IO		211		TO DISTRIBUTING FRAME	312
1AR24L03	IO		245		TO DISTRIBUTING FRAME	312
1AR25L03	IO		246		TO DISTRIBUTING FRAME	312
1AR26L03	IO		247		TO DISTRIBUTING FRAME	312
1AR27L03	IO		248		TO DISTRIBUTING FRAME	312
1AR28L03	IO		249		TO DISTRIBUTING	312

PART OF FS 6
SYMBOL(S) 3 4

COPYRIGHT (c) 1988 AT&T
ALL RIGHTS RESERVED

MODULAR METALLIC SERVICE UNIT

DWG SIZE: D2
ISSUE: 7B

AT&T | SD-5D015-01 | B6CD

PART OF FS 6

EXTERNAL CONNECTIONS - SERVICE GROUP 1

SYMBOL NO. 4 (CONT)

SEE NOTE 1

DESIG	EQPT LOC	CODE	ELEM IDENT	OPT
	04-138	SEE TABLE B	A	

LEAD DESIG	FUNC	TERM. MOD	TERM.	TERM. OPT	DESTINATION	NOTE
					FRAME	
1AR29L03	IO		250		TO DISTRIBUTING FRAME	312
1AR30L03	IO		251		TO DISTRIBUTING FRAME	312
1AR31L03	IO		252		TO DISTRIBUTING FRAME	312
1ASW00	IO		222		7/1	312
1ASW01	IO		322		7/1	312
1AT00L03	IO		104		TO DISTRIBUTING FRAME	312
1AT01L03	IO		105		TO DISTRIBUTING FRAME	312
1AT02L03	IO		106		TO DISTRIBUTING FRAME	312
1AT03L03	IO		107		TO DISTRIBUTING FRAME	312
1AT04L03	IO		108		TO DISTRIBUTING FRAME	312
1AT05L03	IO		109		TO DISTRIBUTING FRAME	312
1AT06L03	IO		110		TO DISTRIBUTING FRAME	312
1AT07L03	IO		111		TO DISTRIBUTING FRAME	312
1AT08L03	IO		145		TO DISTRIBUTING FRAME	312
1AT09L03	IO		146		TO DISTRIBUTING FRAME	312
1AT10L03	IO		147		TO DISTRIBUTING FRAME	312
1AT11L03	IO		148		TO DISTRIBUTING FRAME	312
1AT12L03	IO		149		TO DISTRIBUTING FRAME	312
1AT13L03	IO		150		TO DISTRIBUTING FRAME	312
1AT14L03	IO		151		TO DISTRIBUTING FRAME	312
1AT15L03	IO		152		TO DISTRIBUTING FRAME	312
1AT16L03	IO		304		TO DISTRIBUTING FRAME	312
1AT17L03	IO		305		TO DISTRIBUTING FRAME	312
1AT18L03	IO		306		TO DISTRIBUTING FRAME	312
1AT19L03	IO		307		TO DISTRIBUTING FRAME	312
1AT20L03	IO		308		TO DISTRIBUTING FRAME	312
1AT21L03	IO		309		TO DISTRIBUTING FRAME	312
1AT22L03	IO		310		TO DISTRIBUTING FRAME	312
1AT23L03	IO		311		TO DISTRIBUTING FRAME	312
1AT24L03	IO		345		TO DISTRIBUTING FRAME	312
1AT25L03	IO		346		TO DISTRIBUTING FRAME	312
1AT26L03	IO		347		TO DISTRIBUTING FRAME	312
1AT27L03	IO		348		TO DISTRIBUTING FRAME	312
1AT28L03	IO		349		TO DISTRIBUTING FRAME	312

SYMBOL NO. 4 (CONT)

SEE NOTE 1

DESIG	EQPT LOC	CODE	ELEM IDENT	OPT
	04-138	SEE TABLE B	A	

LEAD DESIG	FUNC	TERM. MOD	TERM.	TERM. OPT	DESTINATION	NOTE
1AT29L03	IO		350		TO DISTRIBUTING FRAME	312
1AT30L03	IO		351		TO DISTRIBUTING FRAME	312
1AT31L03	IO		352		TO DISTRIBUTING FRAME	312
1A0000	IO		023		5/1	312
1A1000	IO		123		5/1	312
1A2000	IO		024		5/1	312
1A3000	IO		124		5/1	312
1A6000	IO		022		5/1	312
1A7000	IO		122		5/1	312
1B3000	IO		054		5/1	312
	IO		154		5/1	312
	IO		254		5/1	312
1CLK00	IO		333		5/1	312
1CURPRN	IO		012		5/1	312
1CURPRP	IO		112		5/1	312
1DRIN0	IO		323		7/1	312
1DWOUT0	IO		233		5/1	312
1EARTHG	IO		056		6/1	312
	IO		156		6/1	312
	IO		256		6/1	312
	IO		356		6/1	312
1JR00	IO		202		6/1	312
1JR01	IO		203		6/1	312
1JR02	IO		044		6/1	312
1JR03	IO		244		6/1	312
1JT00	IO		302		6/1	312
1JT01	IO		303		6/1	312
1JT02	IO		144		6/1	312
1JT03	IO		344		6/1	312
1READ0	IO		133		5/1	312
1SRVRD03	IO		223		5/1	312
1WG1L0	IO		053		6/1	312
	IO		055		6/1	312
1WG2L0	IO		153		6/1	312
	IO		155		6/1	312
1WG3L0	IO		253		6/1	312
	IO		255		6/1	312
1WG4L0	IO		353		6/1	312
	IO		355		6/1	312
1WRITE0	IO		033		5/1	312

NOTE(S):

1. THE FOLLOWING ARE THE TITLES OF RESPECTIVE CIRCUIT PACK

   TN138 - METALLIC ACCESS BOARD
   TN220B - MSU SCAN PACK
   TN221 - SIGNAL DISTRIBUTE PACK
   TN328 - AUTOMATIC LINE INSULATION TEST - HIGH HUMIDITY
   TN329 - AUTOMATIC LINE INSULATION TEST - MID HUMIDITY
   TN330 - AUTOMATIC LINE INSULATION TEST - LOW HUMIDITY
   TN880 - GDX COMPENSATOR
   TN1040 - DISTRIBUTING FRAME TEST ACCESS CIRCUIT
   TN1538 - AUTOMATIC LINE INSULATION TEST - HIGH HUMIDITY
   TN1539 - AUTOMATIC LINE INSULATION TEST - MID HUMIDITY
   TN1540 - AUTOMATIC LINE INSULATION TEST - LOW HUMIDITY
   TN1613 - AUTOMATIC LINE INSULATION TEST - HIGH HUMIDITY
   TN1614 - AUTOMATIC LINE INSULATION TEST - MID HUMIDITY
   TN1615 - AUTOMATIC LINE INSULATION TEST - LOW HUMIDITY
   TN3288 - AUTOMATIC LINE INSULATION TEST - HIGH HUMIDITY
   TN3298 - AUTOMATIC LINE INSULATION TEST - MID HUMIDITY
   TN3308 - AUTOMATIC LINE INSULATION TEST - LOW HUMIDITY
   TN1636 - AUTOMATIC LINE INSULATION TEST - VERY HIGH HUMIDITY

SYMBOL NO. 5

SEE NOTE 1

DESIG	EQPT LOC	CODE	ELEM IDENT	OPT
	04-146	SEE TABLE B	A	

LEAD DESIG	FUNC	TERM. MOD	TERM.	TERM. OPT	DESTINATION	NOTE
NC	1		013			312
	1		014			312
	1		015			312
	1		036			312
	1		037			312
	1		038			312
	1		039			312
	1		040			312
	1		041			312
	1		042			312
	1		043			312
	1		113			312
	1		114			312
	1		115			312
	1		116			312
	1		117			312
	1		118			312
	1		119			312
	1		213			312
	1		214			312
	1		215			312
	1		216			312
	1		217			312
	1		218			312
	1		219			312
	1		220			312
	1		236			312
	1		237			312
	1		238			312
	1		239			312
	1		240			312
	1		241			312
	1		242			312
	1		243			312
	1		354			312
+5V1	10		034	5/1		312
	10		035	5/1		312
	10		134	5/1		312
	10		135	5/1		312
-48RTN11	10		200	5/1		312
	10		201	5/1		312
	10		300	5/1		312
	10		301	5/1		312
-48V11	10		000	5/1		312
	10		001	5/1		312
	10		100	5/1		312
	10		101	5/1		312
GRD04146	10		021			312
	10		032			312
	10		121			312
	10		221			312
	10		224			312
	10		232			312
	10		234			312
	10		235			312
	10		321			312
	10		324			312
	10		332			312
	10		334			312
	10		335			312

SYMBOL NO. 5 (CONT)

SEE NOTE 1

DESIG	EQPT LOC	CODE	ELEM IDENT	OPT
	04-146	SEE TABLE B	A	

LEAD DESIG	FUNC	TERM. MOD	TERM.	TERM. OPT	DESTINATION	NOTE
1AR00L04	IO		004		TO DISTRIBUTING FRAME	312
1AR01L04	IO		005		TO DISTRIBUTING FRAME	312
1AR02L04	IO		006		TO DISTRIBUTING FRAME	312
1AR03L04	IO		007		TO DISTRIBUTING FRAME	312
1AR04L04	IO		008		TO DISTRIBUTING FRAME	312
1AR05L04	IO		009		TO DISTRIBUTING FRAME	312
1AR06L04	IO		010		TO DISTRIBUTING FRAME	312
1AR07L04	IO		011		TO DISTRIBUTING FRAME	312
1AR08L04	IO		045		TO DISTRIBUTING FRAME	312
1AR09L04	IO		046		TO DISTRIBUTING FRAME	312
1AR10L04	IO		047		TO DISTRIBUTING FRAME	312
1AR11L04	IO		048		TO DISTRIBUTING FRAME	312
1AR12L04	IO		049		TO DISTRIBUTING FRAME	312
1AR13L04	IO		050		TO DISTRIBUTING FRAME	312
1AR14L04	IO		051		TO DISTRIBUTING FRAME	312
1AR15L04	IO		052		TO DISTRIBUTING FRAME	312
1AR16L04	IO		Z04		TO DISTRIBUTING FRAME	312
1AR17L04	IO		Z05		TO DISTRIBUTING FRAME	312
1AR18L04	IO		Z06		TO DISTRIBUTING FRAME	312
1AR19L04	IO		Z07		TO DISTRIBUTING FRAME	312
1AR20L04	IO		Z08		TO DISTRIBUTING FRAME	312
1AR21L04	IO		Z09		TO DISTRIBUTING FRAME	312
1AR22L04	IO		Z10		TO DISTRIBUTING FRAME	312
1AR23L04	IO		Z11		TO DISTRIBUTING FRAME	312
1AR24L04	IO		Z45		TO DISTRIBUTING FRAME	312
1AR25L04	IO		Z46		TO DISTRIBUTING FRAME	312
1AR26L04	IO		Z47		TO DISTRIBUTING FRAME	312
1AR27L04	IO		Z48		TO DISTRIBUTING FRAME	312
1AR28L04	IO		Z49		TO DISTRIBUTING	312

PART OF FS 6
SYMBOL(S) 4 5

COPYRIGHT (C) 1988 AT&T
ALL RIGHTS RESERVED

MODULAR METALLIC SERVICE UNIT

DWG SIZE: D2
ISSUE: 7B

AT&T | SD-5D015-01 | B6CE

PART OF FS 6

EXTERNAL CONNECTIONS - SERVICE GROUP 1

SYMBOL NO. 5 (CONT)

SEE NOTE 1

DESIG	EQPT LOC	CODE	ELEM IDENT	OPT
	04-146	SEE TABLE B	A	

LEAD DESIG	FUNC	TERM. MOD	TERM.	TERM. OPT	DESTINATION	NOTE
1AR29L04	IO		250		FRAME TO DISTRIBUTING FRAME	312
1AR30L04	IO		251		TO DISTRIBUTING FRAME	312
1AR31L04	IO		252		TO DISTRIBUTING FRAME	312
1ASW00	IO		222		7/1	312
1ASW01	IO		322		7/1	312
1AT00L04	IO		104		TO DISTRIBUTING FRAME	312
1AT01L04	IO		105		TO DISTRIBUTING FRAME	312
1AT02L04	IO		106		TO DISTRIBUTING FRAME	312
1AT03L04	IO		107		TO DISTRIBUTING FRAME	312
1AT04L04	IO		108		TO DISTRIBUTING FRAME	312
1AT05L04	IO		109		TO DISTRIBUTING FRAME	312
1AT06L04	IO		110		TO DISTRIBUTING FRAME	312
1AT07L04	IO		111		TO DISTRIBUTING FRAME	312
1AT08L04	IO		145		TO DISTRIBUTING FRAME	312
1AT09L04	IO		146		TO DISTRIBUTING FRAME	312
1AT10L04	IO		147		TO DISTRIBUTING FRAME	312
1AT11L04	IO		148		TO DISTRIBUTING FRAME	312
1AT12L04	IO		149		TO DISTRIBUTING FRAME	312
1AT13L04	IO		150		TO DISTRIBUTING FRAME	312
1AT14L04	IO		151		TO DISTRIBUTING FRAME	312
1AT15L04	IO		152		TO DISTRIBUTING FRAME	312
1AT16L04	IO		304		TO DISTRIBUTING FRAME	312
1AT17L04	IO		305		TO DISTRIBUTING FRAME	312
1AT18L04	IO		306		TO DISTRIBUTING FRAME	312
1AT19L04	IO		307		TO DISTRIBUTING FRAME	312
1AT20L04	IO		308		TO DISTRIBUTING FRAME	312
1AT21L04	IO		309		TO DISTRIBUTING FRAME	312
1AT22L04	IO		310		TO DISTRIBUTING FRAME	312
1AT23L04	IO		311		TO DISTRIBUTING FRAME	312
1AT24L04	IO		345		TO DISTRIBUTING FRAME	312
1AT25L04	IO		346		TO DISTRIBUTING FRAME	312
1AT26L04	IO		347		TO DISTRIBUTING FRAME	312
1AT27L04	IO		348		TO DISTRIBUTING FRAME	312
1AT28L04	IO		349		TO DISTRIBUTING FRAME	312

SYMBOL NO. 5 (CONT)

SEE NOTE 1

DESIG	EQPT LOC	CODE	ELEM IDENT	OPT
	04-146	SEE TABLE B	A	

LEAD DESIG	FUNC	TERM. MOD	TERM.	TERM. OPT	DESTINATION	NOTE
1AT29L04	IO		350		TO DISTRIBUTING FRAME	312
1AT30L04	IO		351		TO DISTRIBUTING FRAME	312
1AT31L04	IO		352		TO DISTRIBUTING FRAME	312
1A0000	IO		024		5/1	312
1A1000	IO		124		5/1	312
1A4000	IO		022		5/1	312
1A5000	IO		122		5/1	312
1A6000	IO		023		5/1	312
1A7000	IO		123		5/1	312
1B4000	IO		054		5/1	312
	IO		154		5/1	312
	IO		254		5/1	312
1CLK00	IO		333		5/1	312
1CURPRN	IO		012		5/1	312
1CURPRP	IO		112		5/1	312
1DRIN0	IO		323		7/1	312
1DWOUT0	IO		233		5/1	312
1EARTHG	IO		056		6/1	312
	IO		156		6/1	312
	IO		256		6/1	312
	IO		356		6/1	312
1JR00	IO		202		6/1	312
1JR01	IO		203		6/1	312
1JR02	IO		044		6/1	312
1JR03	IO		244		6/1	312
1JT00	IO		302		6/1	312
1JT01	IO		303		6/1	312
1JT02	IO		144		6/1	312
1JT03	IO		344		6/1	312
1READ0	IO		133		5/1	312
1SRVRQ04	IO		223		5/1	312
1WG1L0	IO		053		6/1	312
	IO		055		6/1	312
1WG2L0	IO		153		6/1	312
	IO		155		6/1	312
1WG3L0	IO		253		6/1	312
	IO		255		6/1	312
1WG4L0	IO		353		6/1	312
	IO		355		6/1	312
1WRITE0	IO		033		5/1	312

NOTE(S):

1. THE FOLLOWING ARE THE TITLES OF RESPECTIVE CIRCUIT PACK

   TN138 - METALLIC ACCESS BOARD
   TNZ208 - MSU SCAN PACK
   TN221 - SIGNAL DISTRIBUTE PACK
   TN328 - AUTOMATIC LINE INSULATION TEST - HIGH HUMIDITY
   TN329 - AUTOMATIC LINE INSULATION TEST - MID HUMIDITY
   TN330 - AUTOMATIC LINE INSULATION TEST - LOW HUMIDITY
   TN880 - GDX COMPENSATOR
   TN1040 - DISTRIBUTING FRAME TEST ACCESS CIRCUIT
   TN1538 - AUTOMATIC LINE INSULATION TEST - HIGH HUMIDITY
   TN1539 - AUTOMATIC LINE INSULATION TEST - MID HUMIDITY
   TN1540 - AUTOMATIC LINE INSULATION TEST - LOW HUMIDITY
   TN1613 - AUTOMATIC LINE INSULATION TEST - HIGH HUMIDITY
   TN1614 - AUTOMATIC LINE INSULATION TEST - MID HUMIDITY
   TN1615 - AUTOMATIC LINE INSULATION TEST - LOW HUMIDITY
   TN3288 - AUTOMATIC LINE INSULATION TEST - HIGH HUMIDITY
   TN329B - AUTOMATIC LINE INSULATION TEST - MID HUMIDITY
   TN330B - AUTOMATIC LINE INSULATION TEST - LOW HUMIDITY
   TN1636 - AUTOMATIC LINE INSULATION TEST - VERY HIGH HUMIDITY

SYMBOL NO. 6

SEE NOTE 1

DESIG	EQPT LOC	CODE	ELEM IDENT	OPT
	04-154	SEE TABLE B	A	

LEAD DESIG	FUNC	TERM. MOD	TERM.	TERM. OPT	DESTINATION	NOTE
NC	I		013			312
	I		014			312
	I		015			312
	I		036			312
	I		037			312
	I		038			312
	I		039			312
	I		040			312
	I		041			312
	I		042			312
	I		043			312
	I		113			312
	I		114			312
	I		115			312
	I		116			312
	I		117			312
	I		118			312
	I		119			312
	I		213			312
	I		214			312
	I		215			312
	I		216			312
	I		217			312
	I		218			312
	I		219			312
	I		220			312
	I		236			312
	I		237			312
	I		238			312
	I		239			312
	I		240			312
	I		241			312
	I		242			312
	I		243			312
	I		354			312
+5V1	IO		034	5/1		312
	IO		035	5/1		312
	IO		134	5/1		312
	IO		135	5/1		312
-48RTN11	IO		200	5/1		312
	IO		201	5/1		312
	IO		300	5/1		312
	IO		301	5/1		312
-48V11	IO		000	5/1		312
	IO		001	5/1		312
	IO		100	5/1		312
	IO		101	5/1		312
GRD04154	IO		021			312
	IO		032			312
	IO		121			312
	IO		221			312
	IO		224			312
	IO		232			312
	IO		234			312
	IO		235			312
	IO		321			312
	IO		324			312
	IO		332			312
	IO		334			312
	IO		335			312

SYMBOL NO. 6 (CONT)

SEE NOTE 1

DESIG	EQPT LOC	CODE	ELEM IDENT	OPT
	04-154	SEE TABLE B	A	

LEAD DESIG	FUNC	TERM. MOD	TERM.	TERM. OPT	DESTINATION	NOTE
1AR00L05	IO		004		TO DISTRIBUTING FRAME	312
1AR01L05	IO		005		TO DISTRIBUTING FRAME	312
1AR02L05	IO		006		TO DISTRIBUTING FRAME	312
1AR03L05	IO		007		TO DISTRIBUTING FRAME	312
1AR04L05	IO		008		TO DISTRIBUTING FRAME	312
1AR05L05	IO		009		TO DISTRIBUTING FRAME	312
1AR06L05	IO		010		TO DISTRIBUTING FRAME	312
1AR07L05	IO		011		TO DISTRIBUTING FRAME	312
1AR08L05	IO		045		TO DISTRIBUTING FRAME	312
1AR09L05	IO		046		TO DISTRIBUTING FRAME	312
1AR10L05	IO		047		TO DISTRIBUTING FRAME	312
1AR11L05	IO		048		TO DISTRIBUTING FRAME	312
1AR12L05	IO		049		TO DISTRIBUTING FRAME	312
1AR13L05	IO		050		TO DISTRIBUTING FRAME	312
1AR14L05	IO		051		TO DISTRIBUTING FRAME	312
1AR15L05	IO		052		TO DISTRIBUTING FRAME	312
1AR16L05	IO		204		TO DISTRIBUTING FRAME	312
1AR17L05	IO		205		TO DISTRIBUTING FRAME	312
1AR18L05	IO		206		TO DISTRIBUTING FRAME	312
1AR19L05	IO		207		TO DISTRIBUTING FRAME	312
1AR20L05	IO		208		TO DISTRIBUTING FRAME	312
1AR21L05	IO		209		TO DISTRIBUTING FRAME	312
1AR22L05	IO		210		TO DISTRIBUTING FRAME	312
1AR23L05	IO		211		TO DISTRIBUTING FRAME	312
1AR24L05	IO		245		TO DISTRIBUTING FRAME	312
1AR25L05	IO		246		TO DISTRIBUTING FRAME	312
1AR26L05	IO		247		TO DISTRIBUTING FRAME	312
1AR27L05	IO		248		TO DISTRIBUTING FRAME	312
1AR28L05	IO		249		TO DISTRIBUTING	312

PART OF FS 6
SYMBOL(S) 5 6

COPYRIGHT (c) 1988 AT&T
ALL RIGHTS RESERVED

MODULAR METALLIC SERVICE UNIT

DWG SIZE	ISSUE
D2	7B

AT&T	SD-5D015-01	86CF

PART OF FS 6

EXTERNAL CONNECTIONS - SERVICE GROUP 1

SYMBOL NO. 6 (CONT)

SEE NOTE 1

DESIG	EQPT LOC	CODE	ELEM IDENT	OPT
	04-154	SEE TABLE B	A	

LEAD DESIG	FUNC	TERM. MOD	TERM.	TERM. OPT	DESTINATION	NOTE
1AR29L05	IO		250		FRAME TO DISTRIBUTING FRAME	312
1AR30L05	IO		251		TO DISTRIBUTING FRAME	312
1AR31L05	IO		252		TO DISTRIBUTING FRAME	312
1ASW00	IO		222		7/1	312
1ASW01	IO		322		7/1	312
1AT00L05	IO		104		TO DISTRIBUTING FRAME	312
1AT01L05	IO		105		TO DISTRIBUTING FRAME	312
1AT02L05	IO		106		TO DISTRIBUTING FRAME	312
1AT03L05	IO		107		TO DISTRIBUTING FRAME	312
1AT04L05	IO		108		TO DISTRIBUTING FRAME	312
1AT05L05	IO		109		TO DISTRIBUTING FRAME	312
1AT06L05	IO		110		TO DISTRIBUTING FRAME	312
1AT07L05	IO		111		TO DISTRIBUTING FRAME	312
1AT08L05	IO		145		TO DISTRIBUTING FRAME	312
1AT09L05	IO		146		TO DISTRIBUTING FRAME	312
1AT10L05	IO		147		TO DISTRIBUTING FRAME	312
1AT11L05	IO		148		TO DISTRIBUTING FRAME	312
1AT12L05	IO		149		TO DISTRIBUTING FRAME	312
1AT13L05	IO		150		TO DISTRIBUTING FRAME	312
1AT14L05	IO		151		TO DISTRIBUTING FRAME	312
1AT15L05	IO		152		TO DISTRIBUTING FRAME	312
1AT16L05	IO		304		TO DISTRIBUTING FRAME	312
1AT17L05	IO		305		TO DISTRIBUTING FRAME	312
1AT18L05	IO		306		TO DISTRIBUTING FRAME	312
1AT19L05	IO		307		TO DISTRIBUTING FRAME	312
1AT20L05	IO		308		TO DISTRIBUTING FRAME	312
1AT21L05	IO		309		TO DISTRIBUTING FRAME	312
1AT22L05	IO		310		TO DISTRIBUTING FRAME	312
1AT23L05	IO		311		TO DISTRIBUTING FRAME	312
1AT24L05	IO		345		TO DISTRIBUTING FRAME	312
1AT25L05	IO		346		TO DISTRIBUTING FRAME	312
1AT26L05	IO		347		TO DISTRIBUTING FRAME	312
1AT27L05	IO		348		TO DISTRIBUTING FRAME	312
1AT28L05	IO		349		TO DISTRIBUTING FRAME	312

SYMBOL NO. 6 (CONT)

SEE NOTE 1

DESIG	EQPT LOC	CODE	ELEM IDENT	OPT
	04-154	SEE TABLE B	A	

LEAD DESIG	FUNC	TERM. MOD	TERM.	TERM. OPT	DESTINATION	NOTE
1AT29L05	IO		350		TO DISTRIBUTING FRAME	312
1AT30L05	IO		351		TO DISTRIBUTING FRAME	312
1AT31L05	IO		352		TO DISTRIBUTING FRAME	312
1A2000	IO		022		5/1	312
1A3000	IO		122		5/1	312
1A4000	IO		023		5/1	312
1A5000	IO		123		5/1	312
1A6000	IO		024		5/1	312
1A7000	IO		124		5/1	312
185000	IO		054		5/1	312
	IO		154		5/1	312
	IO		254		5/1	312
1CLK00	IO		333		5/1	312
1CURPRN	IO		012		5/1	312
1CURPRP	IO		112		5/1	312
1DRIN0	IO		323		7/1	312
1DWDUT0	IO		233		5/1	312
1EARTHG	IO		056		6/1	312
	IO		156		6/1	312
	IO		256		6/1	312
	IO		356		6/1	312
1JR00	IO		202		6/1	312
1JR01	IO		203		6/1	312
1JR02	IO		044		6/1	312
1JR03	IO		244		6/1	312
1JT00	IO		302		6/1	312
1JT01	IO		303		6/1	312
1JT02	IO		144		6/1	312
1JT03	IO		344		6/1	312
1READ0	IO		133		5/1	312
1SRVRQ05	IO		223		5/1	312
1WG1L0	IO		053		6/1	312
	IO		055		6/1	312
1WG2L0	IO		153		6/1	312
	IO		155		6/1	312
1WG3L0	IO		253		6/1	312
	IO		255		6/1	312
1WG4L0	IO		353		6/1	312
	IO		355		6/1	312
1WRITE0	IO		033		5/1	312

NOTE(S):

1. THE FOLLOWING ARE THE TITLES OF RESPECTIVE CIRCUIT PACK

   TN138 - METALLIC ACCESS BOARD
   TN2208 - MSU SCAN PACK
   TN221 - SIGNAL DISTRIBUTE PACK
   TN328 - AUTOMATIC LINE INSULATION TEST - HIGH HUMIDITY
   TN329 - AUTOMATIC LINE INSULATION TEST - MID HUMIDITY
   TN330 - AUTOMATIC LINE INSULATION TEST - LOW HUMIDITY
   TN880 - GDX COMPENSATOR
   TN1040 - DISTRIBUTING FRAME TEST ACCESS CIRCUIT
   TN1538 - AUTOMATIC LINE INSULATION TEST - HIGH HUMIDITY
   TN1539 - AUTOMATIC LINE INSULATION TEST - MID HUMIDITY
   TN1540 - AUTOMATIC LINE INSULATION TEST - LOW HUMIDITY
   TN1613 - AUTOMATIC LINE INSULATION TEST - HIGH HUMIDITY
   TN1614 - AUTOMATIC LINE INSULATION TEST - MID HUMIDITY
   TN1615 - AUTOMATIC LINE INSULATION TEST - LOW HUMIDITY
   TN3288 - AUTOMATIC LINE INSULATION TEST - HIGH HUMIDITY
   TN3298 - AUTOMATIC LINE INSULATION TEST - MID HUMIDITY
   TN3308 - AUTOMATIC LINE INSULATION TEST - LOW HUMIDITY
   TN1636 - AUTOMATIC LINE INSULATION TEST - VERY HIGH HUMIDITY

SYMBOL NO. 7

SEE NOTE 1

DESIG	EQPT LOC	CODE	ELEM IDENT	OPT
	04-162	SEE TABLE B	A	

LEAD DESIG	FUNC	TERM. MOD	TERM.	TERM. OPT	DESTINATION	NOTE
NC	I		013			312
	I		014			312
	I		015			312
	I		036			312
	I		037			312
	I		038			312
	I		039			312
	I		040			312
	I		041			312
	I		042			312
	I		043			312
	I		113			312
	I		114			312
	I		115			312
	I		116			312
	I		117			312
	I		118			312
	I		119			312
	I		213			312
	I		214			312
	I		215			312
	I		216			312
	I		217			312
	I		218			312
	I		219			312
	I		220			312
	I		236			312
	I		237			312
	I		238			312
	I		239			312
	I		240			312
	I		241			312
	I		242			312
	I		243			312
	I		244			312
+5V1	IO		034	5/1		312
	IO		035	5/1		312
	IO		134	5/1		312
	IO		135	5/1		312
-48RTN11	IO		200	5/1		312
	IO		201	5/1		312
	IO		300	5/1		312
	IO		301	5/1		312
-48V11	IO		000	5/1		312
	IO		001	5/1		312
	IO		100	5/1		312
	IO		101	5/1		312
GRD04162	IO		021			312
	IO		032			312
	IO		121			312
	IO		221			312
	IO		224			312
	IO		232			312
	IO		234			312
	IO		235			312
	IO		321			312
	IO		324			312
	IO		332			312
	IO		334			312
	IO		335			312

SYMBOL NO. 7 (CONT)

SEE NOTE 1

DESIG	EQPT LOC	CODE	ELEM IDENT	OPT
	04-162	SEE TABLE B	A	

LEAD DESIG	FUNC	TERM. MOD	TERM.	TERM. OPT	DESTINATION	NOTE
1AR00L06	IO		004		TO DISTRIBUTING FRAME	312
1AR01L06	IO		005		TO DISTRIBUTING FRAME	312
1AR02L06	IO		006		TO DISTRIBUTING FRAME	312
1AR03L06	IO		007		TO DISTRIBUTING FRAME	312
1AR04L06	IO		008		TO DISTRIBUTING FRAME	312
1AR05L06	IO		009		TO DISTRIBUTING FRAME	312
1AR06L06	IO		010		TO DISTRIBUTING FRAME	312
1AR07L06	IO		011		TO DISTRIBUTING FRAME	312
1AR08L06	IO		045		TO DISTRIBUTING FRAME	312
1AR09L06	IO		046		TO DISTRIBUTING FRAME	312
1AR10L06	IO		047		TO DISTRIBUTING FRAME	312
1AR11L06	IO		048		TO DISTRIBUTING FRAME	312
1AR12L06	IO		049		TO DISTRIBUTING FRAME	312
1AR13L06	IO		050		TO DISTRIBUTING FRAME	312
1AR14L06	IO		051		TO DISTRIBUTING FRAME	312
1AR15L06	IO		052		TO DISTRIBUTING FRAME	312
1AR16L06	IO		204		TO DISTRIBUTING FRAME	312
1AR17L06	IO		205		TO DISTRIBUTING FRAME	312
1AR18L06	IO		206		TO DISTRIBUTING FRAME	312
1AR19L06	IO		207		TO DISTRIBUTING FRAME	312
1AR20L06	IO		208		TO DISTRIBUTING FRAME	312
1AR21L06	IO		209		TO DISTRIBUTING FRAME	312
1AR22L06	IO		210		TO DISTRIBUTING FRAME	312
1AR23L06	IO		211		TO DISTRIBUTING FRAME	312
1AR24L06	IO		245		TO DISTRIBUTING FRAME	312
1AR25L06	IO		246		TO DISTRIBUTING FRAME	312
1AR26L06	IO		247		TO DISTRIBUTING FRAME	312
1AR27L06	IO		248		TO DISTRIBUTING FRAME	312
1AR28L06	IO		249		TO DISTRIBUTING FRAME	312

PART OF FS 6
SYMBOL(S) 6 7

COPYRIGHT (c) 1988 AT&T
ALL RIGHTS RESERVED

MODULAR METALLIC SERVICE UNIT

DWG SIZE	ISSUE
C2	7B

AT&T	SD-5D015-01	B6CG

PRINTED IN U.S.A.

PART OF FS 6

EXTERNAL CONNECTIONS - SERVICE GROUP 1

SYMBOL NO. 7 (CONT)

SEE NOTE 1

DESIG: ----- EQPT LOC: 04-162 CODE: SEE TABLE B ELEM IDENT: A OPT: ---

LEAD DESIG	FUNC	TERM. MOD	TERM.	TERM. OPT	DESTINATION	NOTE
					FRAME	
1AR29L06	IO		250		TO DISTRIBUTING FRAME	312
1AR30L06	IO		251		TO DISTRIBUTING FRAME	312
1AR31L06	IO		252		TO DISTRIBUTING FRAME	312
1ASW00	IO		222		7/1	312
1ASW01	IO		322		7/1	312
1AT00L06	IO		104		TO DISTRIBUTING FRAME	312
1AT01L06	IO		105		TO DISTRIBUTING FRAME	312
1AT02L06	IO		106		TO DISTRIBUTING FRAME	312
1AT03L06	IO		107		TO DISTRIBUTING FRAME	312
1AT04L06	IO		108		TO DISTRIBUTING FRAME	312
1AT05L06	IO		109		TO DISTRIBUTING FRAME	312
1AT06L06	IO		110		TO DISTRIBUTING FRAME	312
1AT07L06	IO		111		TO DISTRIBUTING FRAME	312
1AT08L06	IO		145		TO DISTRIBUTING FRAME	312
1AT09L06	IO		146		TO DISTRIBUTING FRAME	312
1AT10L06	IO		147		TO DISTRIBUTING FRAME	312
1AT11L06	IO		148		TO DISTRIBUTING FRAME	312
1AT12L06	IO		149		TO DISTRIBUTING FRAME	312
1AT13L06	IO		150		TO DISTRIBUTING FRAME	312
1AT14L06	IO		151		TO DISTRIBUTING FRAME	312
1AT15L06	IO		152		TO DISTRIBUTING FRAME	312
1AT16L06	IO		304		TO DISTRIBUTING FRAME	312
1AT17L06	IO		305		TO DISTRIBUTING FRAME	312
1AT18L06	IO		306		TO DISTRIBUTING FRAME	312
1AT19L06	IO		307		TO DISTRIBUTING FRAME	312
1AT20L06	IO		308		TO DISTRIBUTING FRAME	312
1AT21L06	IO		309		TO DISTRIBUTING FRAME	312
1AT22L06	IO		310		TO DISTRIBUTING FRAME	312
1AT23L06	IO		311		TO DISTRIBUTING FRAME	312
1AT24L06	IO		345		TO DISTRIBUTING FRAME	312
1AT25L06	IO		346		TO DISTRIBUTING FRAME	312
1AT26L06	IO		347		TO DISTRIBUTING FRAME	312
1AT27L06	IO		348		TO DISTRIBUTING FRAME	312
1AT28L06	IO		349		TO DISTRIBUTING FRAME	312

SYMBOL NO. 7 (CONT)

SEE NOTE 1

DESIG: ----- EQPT LOC: 04-162 CODE: SEE TABLE B ELEM IDENT: A OPT: ---

LEAD DESIG	FUNC	TERM. MOD	TERM.	TERM. OPT	DESTINATION	NOTE
1AT29L06	IO		350		TO DISTRIBUTING FRAME	312
1AT30L06	IO		351		TO DISTRIBUTING FRAME	312
1AT31L06	IO		352		TO DISTRIBUTING FRAME	312
1A0000	IO		022		5/1	312
1A1000	IO		122		5/1	312
1A2000	IO		023		5/1	312
1A3000	IO		123		5/1	312
1A4000	IO		024		5/1	312
1A5000	IO		124		5/1	312
1B6000	IO		054		5/1	312
	IO		154		5/1	312
	IO		254		5/1	312
1CLK00	IO		333		5/1	312
1CURPRN	IO		012		5/1	312
1CURPRP	IO		112		5/1	312
1DRIN0	IO		323		7/1	312
1DWOUT0	IO		233		5/1	312
1EARTHG	IO		056		6/1	312
	IO		156		6/1	312
	IO		256		6/1	312
	IO		356		6/1	312
1JR00	IO		202		6/1	312
1JR01	IO		203		6/1	312
1JR02	IO		044		6/1	312
1JR03	IO		244		6/1	312
1JT00	IO		302		6/1	312
1JT01	IO		303		6/1	312
1JT02	IO		144		6/1	312
1JT03	IO		344		6/1	312
1READ0	IO		133		5/1	312
1SRVR006	IO		223		5/1	312
1WG1L0	IO		053		6/1	312
	IO		055		6/1	312
1WG2L0	IO		153		6/1	312
	IO		155		6/1	312
1WG3L0	IO		253		6/1	312
	IO		255		6/1	312
1WG4L0	IO		353		6/1	312
	IO		355		6/1	312
1WRITE0	IO		033		5/1	312

NOTE(S):

1. THE FOLLOWING ARE THE TITLES OF RESPECTIVE CIRCUIT PACK

   TN138 - METALLIC ACCESS BOARD
   TNZ20B - MSU SCAN PACK
   TNZ21 - SIGNAL DISTRIBUTE PACK
   TN328 - AUTOMATIC LINE INSULATION TEST - HIGH HUMIDITY
   TN329 - AUTOMATIC LINE INSULATION TEST - MID HUMIDITY
   TN330 - AUTOMATIC LINE INSULATION TEST - LOW HUMIDITY
   TN880 - GDX COMPENSATOR
   TN1040 - DISTRIBUTING FRAME TEST ACCESS CIRCUIT
   TN1538 - AUTOMATIC LINE INSULATION TEST - HIGH HUMIDITY
   TN1539 - AUTOMATIC LINE INSULATION TEST - MID HUMIDITY
   TN1540 - AUTOMATIC LINE INSULATION TEST - LOW HUMIDITY
   TN1613 - AUTOMATIC LINE INSULATION TEST - HIGH HUMIDITY
   TN1614 - AUTOMATIC LINE INSULATION TEST - MID HUMIDITY
   TN1615 - AUTOMATIC LINE INSULATION TEST - LOW HUMIDITY
   TN3288 - AUTOMATIC LINE INSULATION TEST - HIGH HUMIDITY
   TN3298 - AUTOMATIC LINE INSULATION TEST - MID HUMIDITY
   TN3308 - AUTOMATIC LINE INSULATION TEST - LOW HUMIDITY
   TN1636 - AUTOMATIC LINE INSULATION TEST - VERY HIGH HUMIDITY

SYMBOL NO. 8

SEE NOTE 1

DESIG: ----- EQPT LOC: 04-170 CODE: SEE TABLE B ELEM IDENT: A OPT: ---

LEAD DESIG	FUNC	TERM. MOD	TERM.	TERM. OPT	DESTINATION	NOTE
NC	I		013			312
	I		014			312
	I		015			312
	I		036			312
	I		037			312
	I		038			312
	I		039			312
	I		040			312
	I		041			312
	I		042			312
	I		043			312
	I		113			312
	I		114			312
	I		115			312
	I		116			312
	I		117			312
	I		118			312
	I		119			312
	I		213			312
	I		214			312
	I		215			312
	I		216			312
	I		217			312
	I		218			312
	I		219			312
	I		220			312
	I		236			312
	I		237			312
	I		238			312
	I		239			312
	I		240			312
	I		241			312
	I		242			312
	I		243			312
	I		354			312
+5V1	IO		034	5/1		312
	IO		035	5/1		312
	IO		134	5/1		312
	IO		135	5/1		312
-48RTN11	IO		200	5/1		312
	IO		201	5/1		312
	IO		300	5/1		312
	IO		301	5/1		312
-48V11	IO		000	5/1		312
	IO		001	5/1		312
	IO		100	5/1		312
	IO		101	5/1		312
GRD04170	IO		021			312
	IO		032			312
	IO		121			312
	IO		221			312
	IO		224			312
	IO		232			312
	IO		234			312
	IO		235			312
	IO		321			312
	IO		324			312
	IO		332			312
	IO		334			312
	IO		335			312

SYMBOL NO. 8 (CONT)

SEE NOTE 1

DESIG: ----- EQPT LOC: 04-170 CODE: SEE TABLE B ELEM IDENT: A OPT: ---

LEAD DESIG	FUNC	TERM. MOD	TERM.	TERM. OPT	DESTINATION	NOTE
1AR00L07	IO		004		TO DISTRIBUTING FRAME	312
1AR01L07	IO		005		TO DISTRIBUTING FRAME	312
1AR02L07	IO		006		TO DISTRIBUTING FRAME	312
1AR03L07	IO		007		TO DISTRIBUTING FRAME	312
1AR04L07	IO		008		TO DISTRIBUTING FRAME	312
1AR05L07	IO		009		TO DISTRIBUTING FRAME	312
1AR06L07	IO		010		TO DISTRIBUTING FRAME	312
1AR07L07	IO		011		TO DISTRIBUTING FRAME	312
1AR08L07	IO		045		TO DISTRIBUTING FRAME	312
1AR09L07	IO		046		TO DISTRIBUTING FRAME	312
1AR10L07	IO		047		TO DISTRIBUTING FRAME	312
1AR11L07	IO		048		TO DISTRIBUTING FRAME	312
1AR12L07	IO		049		TO DISTRIBUTING FRAME	312
1AR13L07	IO		050		TO DISTRIBUTING FRAME	312
1AR14L07	IO		051		TO DISTRIBUTING FRAME	312
1AR15L07	IO		052		TO DISTRIBUTING FRAME	312
1AR16L07	IO		Z04		TO DISTRIBUTING FRAME	312
1AR17L07	IO		Z05		TO DISTRIBUTING FRAME	312
1AR18L07	IO		Z06		TO DISTRIBUTING FRAME	312
1AR19L07	IO		Z07		TO DISTRIBUTING FRAME	312
1AR20L07	IO		Z08		TO DISTRIBUTING FRAME	312
1AR21L07	IO		Z09		TO DISTRIBUTING FRAME	312
1AR22L07	IO		Z10		TO DISTRIBUTING FRAME	312
1AR23L07	IO		Z11		TO DISTRIBUTING FRAME	312
1AR24L07	IO		Z45		TO DISTRIBUTING FRAME	312
1AR25L07	IO		Z46		TO DISTRIBUTING FRAME	312
1AR26L07	IO		Z47		TO DISTRIBUTING FRAME	312
1AR27L07	IO		Z48		TO DISTRIBUTING FRAME	312
1AR28L07	IO		Z49		TO DISTRIBUTING	312

PART OF FS 6
SYMBOL(S) 7 8

COPYRIGHT (C) 1988 AT&T
ALL RIGHTS RESERVED

MODULAR METALLIC SERVICE UNIT

DWG SIZE	ISSUE
C2	7B

AT&T	SD-5D015-01	B6CH

PRINTED IN U.S.A.

PART OF FS 6

EXTERNAL CONNECTIONS - SERVICE GROUP 1

SYMBOL NO. 8 (CONT)

SEE NOTE 1

DESIG	EQPT LOC	CODE	ELEM IDENT	OPT
	04-170	SEE TABLE B	A	

LEAD DESIG	FUNC	TERM. MOD	TERM.	TERM. OPT	DESTINATION	NOTE
1AR29L07	IO		250		TO DISTRIBUTING FRAME	312
1AR30L07	IO		251		TO DISTRIBUTING FRAME	312
1AR31L07	IO		252		TO DISTRIBUTING FRAME	312
1ASW00	IO		222		7/1	312
1ASW01	IO		322		7/1	312
1AT00L07	IO		104		TO DISTRIBUTING FRAME	312
1AT01L07	IO		105		TO DISTRIBUTING FRAME	312
1AT02L07	IO		106		TO DISTRIBUTING FRAME	312
1AT03L07	IO		107		TO DISTRIBUTING FRAME	312
1AT04L07	IO		108		TO DISTRIBUTING FRAME	312
1AT05L07	IO		109		TO DISTRIBUTING FRAME	312
1AT06L07	IO		110		TO DISTRIBUTING FRAME	312
1AT07L07	IO		111		TO DISTRIBUTING FRAME	312
1AT08L07	IO		145		TO DISTRIBUTING FRAME	312
1AT09L07	IO		146		TO DISTRIBUTING FRAME	312
1AT10L07	IO		147		TO DISTRIBUTING FRAME	312
1AT11L07	IO		148		TO DISTRIBUTING FRAME	312
1AT12L07	IO		149		TO DISTRIBUTING FRAME	312
1AT13L07	IO		150		TO DISTRIBUTING FRAME	312
1AT14L07	IO		151		TO DISTRIBUTING FRAME	312
1AT15L07	IO		152		TO DISTRIBUTING FRAME	312
1AT16L07	IO		304		TO DISTRIBUTING FRAME	312
1AT17L07	IO		305		TO DISTRIBUTING FRAME	312
1AT18L07	IO		306		TO DISTRIBUTING FRAME	312
1AT19L07	IO		307		TO DISTRIBUTING FRAME	312
1AT20L07	IO		308		TO DISTRIBUTING FRAME	312
1AT21L07	IO		309		TO DISTRIBUTING FRAME	312
1AT22L07	IO		310		TO DISTRIBUTING FRAME	312
1AT23L07	IO		311		TO DISTRIBUTING FRAME	312
1AT24L07	IO		345		TO DISTRIBUTING FRAME	312
1AT25L07	IO		346		TO DISTRIBUTING FRAME	312
1AT26L07	IO		347		TO DISTRIBUTING FRAME	312
1AT27L07	IO		348		TO DISTRIBUTING FRAME	312
1AT28L07	IO		349		TO DISTRIBUTING FRAME	312

SYMBOL NO. 8 (CONT)

SEE NOTE 1

DESIG	EQPT LOC	CODE	ELEM IDENT	OPT
	04-170	SEE TABLE B	A	

LEAD DESIG	FUNC	TERM. MOD	TERM.	TERM. OPT	DESTINATION	NOTE
1AT29L07	IO		350		TO DISTRIBUTING FRAME	312
1AT30L07	IO		351		TO DISTRIBUTING FRAME	312
1AT31L07	IO		352		TO DISTRIBUTING FRAME	312
1A0000	IO		023		5/1	312
1A1000	IO		123		5/1	312
1A2000	IO		024		5/1	312
1A3000	IO		124		5/1	312
1A6000	IO		022		5/1	312
1A7000	IO		122		5/1	312
1B7000	IO		054		5/1	312
	IO		154		5/1	312
	IO		254		5/1	312
1CLK00	IO		333		5/1	312
1CURPRN	IO		012		5/1	312
1CURPRP	IO		112		5/1	312
1DRIN0	IO		323		7/1	312
1DWOUT0	IO		233		5/1	312
1EARTHG	IO		056		6/1	312
	IO		156		6/1	312
	IO		256		6/1	312
	IO		356		6/1	312
1JR00	IO		202		6/1	312
1JR01	IO		203		6/1	312
1JR02	IO		044		6/1	312
1JR03	IO		244		6/1	312
1JT00	IO		302		6/1	312
1JT01	IO		303		6/1	312
1JT02	IO		144		6/1	312
1JT03	IO		344		6/1	312
1READ0	IO		133		5/1	312
1SRVR007	IO		223		5/1	312
1WG1L0	IO		053		6/1	312
	IO		055		6/1	312
1WG2L0	IO		153		6/1	312
	IO		155		6/1	312
1WG3L0	IO		253		6/1	312
	IO		255		6/1	312
1WG4L0	IO		353		6/1	312
	IO		355		6/1	312
1WRITE0	IO		033		5/1	312

NOTE(S):

1. THE FOLLOWING ARE THE TITLES OF RESPECTIVE CIRCUIT PACK

   TN138 - METALLIC ACCESS BOARD
   TN220B - MSU SCAN PACK
   TN221 - SIGNAL DISTRIBUTE PACK
   TN328 - AUTOMATIC LINE INSULATION TEST - HIGH HUMIDITY
   TN329 - AUTOMATIC LINE INSULATION TEST - MID HUMIDITY
   TN330 - AUTOMATIC LINE INSULATION TEST - LOW HUMIDITY
   TN880 - GDX COMPENSATOR
   TN1040 - DISTRIBUTING FRAME TEST ACCESS CIRCUIT
   TN1538 - AUTOMATIC LINE INSULATION TEST - HIGH HUMIDITY
   TN1539 - AUTOMATIC LINE INSULATION TEST - MID HUMIDITY
   TN1540 - AUTOMATIC LINE INSULATION TEST - LOW HUMIDITY
   TN1613 - AUTOMATIC LINE INSULATION TEST - HIGH HUMIDITY
   TN1614 - AUTOMATIC LINE INSULATION TEST - MID HUMIDITY
   TN1615 - AUTOMATIC LINE INSULATION TEST - LOW HUMIDITY
   TN328B - AUTOMATIC LINE INSULATION TEST - HIGH HUMIDITY
   TN329B - AUTOMATIC LINE INSULATION TEST - MID HUMIDITY
   TN330B - AUTOMATIC LINE INSULATION TEST - LOW HUMIDITY
   TN1636 - AUTOMATIC LINE INSULATION TEST - VERY HIGH HUMIDITY

PART OF FS 6
SYMBOL(S) 8

COPYRIGHT (C) 1988 AT&T
ALL RIGHTS RESERVED

MODULAR METALLIC SERVICE UNIT

DWG SIZE C2 | ISSUE 7B

AT&T | SD-5D015-01 | B6CJ

PRINTED IN U.S.A.

PART OF FS 7

METALLIC TEST INTERCONNECTION BUS - SERVICE GROUP 1
(P/O INTERCONNECTION & FLOW DIAGRAM)

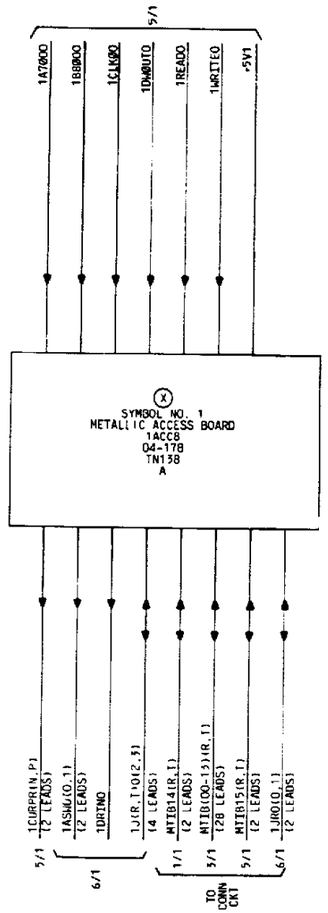

Copyright 1988 AT&T
All Rights Reserved

MODULAR METALLIC SERVICE UNIT	DWG SIZE: B5	ISSUE: 5A
AT&T	SD-5D015-01	B7AA

PART OF FS 7

METALLIC TEST INTERCONNECTION BUS - SERVICE GROUP 1

SYMBOL NO. 1

METALLIC ACCESS BOARD

DESIG	EQPT LOC	CODE	ELEM IDENT	OPT
1ACC8	04-178	TN138	A	(X)

LEAD DESIG	FUNC	TERM. MOD	TERM.	TERM. OPT	DESTINATION	NOTE
NC	O	INT	223			
	I	MRST	354			
+5V1	PWR	+5	034		5/1	
	PWR	+5	035		5/1	
	PWR	+5	134		5/1	
	PWR	+5	135		5/1	
GRD04178	GRD	GRD	021			
	GRD	GRD	053			
	GRD	GRD	121			
	GRD	GRD	153			
	GRD	GRD	221			
	GRD	GRD	224			
	GRD	GRD	232			
	GRD	GRD	234			
	GRD	GRD	235			
	GRD	GRD	253			
	GRD	GRD	321			
	GRD	GRD	324			
	GRD	GRD	332			
	GRD	GRD	334			
	GRD	GRD	335			
	GRD	GRD	353			
MTIB00R	IO	AR16	204		3/1 TO CONN CKT	
MTIB00T	IO	AT16	304		3/1 TO CONN CKT	
MTIB01R	IO	AR17	205		3/1 TO CONN CKT	
MTIB01T	IO	AT17	305		3/1 TO CONN CKT	
MTIB02R	IO	AR18	206		3/1 TO CONN CKT	
MTIB02T	IO	AT18	306		3/1 TO CONN CKT	
MTIB03R	IO	AR19	207		3/1 TO CONN CKT	
MTIB03T	IO	AT19	307		3/1 TO CONN CKT	
MTIB04R	IO	AR20	208		3/1 TO CONN CKT	
MTIB04T	IO	AT20	308		3/1 TO CONN CKT	
MTIB05R	IO	AR21	209		3/1 TO CONN CKT	
MTIB05T	IO	AT21	309		3/1 TO CONN CKT	
MTIB06R	IO	AR22	210		3/1 TO CONN CKT	
MTIB06T	IO	AT22	310		3/1 TO CONN CKT	
MTIB07R	IO	AR23	211		3/1 TO CONN CKT	
MTIB07T	IO	AT23	311		3/1 TO CONN CKT	
MTIB08R	IO	AR24	245		3/1 TO CONN CKT	
MTIB08T	IO	AT24	345		3/1 TO CONN CKT	
MTIB09R	IO	AR25	246		3/1 TO CONN CKT	
MTIB09T	IO	AT25	346		3/1 TO CONN CKT	
MTIB10R	IO	AR26	247		3/1 TO CONN CKT	
MTIB10T	IO	AT26	347		3/1 TO CONN CKT	
MTIB11R	IO	AR27	248		3/1 TO CONN CKT	

SYMBOL NO. 1 (CONT)

METALLIC ACCESS BOARD

DESIG	EQPT LOC	CODE	ELEM IDENT	OPT
1ACC8	04-178	TN138	A	(X)

LEAD DESIG	FUNC	TERM. MOD	TERM.	TERM. OPT	DESTINATION	NOTE
MTIB11T	IO	AT27	348		3/1 TO CONN CKT	
MTIB12R	IO	AR28	249		3/1 TO CONN CKT	
MTIB12T	IO	AT28	349		3/1 TO CONN CKT	
MTIB13R	IO	AR29	250		3/1 TO CONN CKT	
MTIB13T	IO	AT29	350		3/1 TO CONN CKT	
MTIB14R	IO	AR30	251		1/1 TO CONN CKT	
MTIB14T	IO	AT30	351		1/1 TO CONN CKT	
MTIB15R	IO	AR31	252		5/1 TO CONN CKT	
MTIB15T	IO	AT31	352		5/1 TO CONN CKT	
1ASW00	O	ASW0	222		6/1,6/2 6/3,6/4 6/5,6/6 6/7,6/8 5/1	
1ASW01	O	ASW1	322		6/1,6/2 6/3,6/4 6/5,6/6 6/7,6/8 5/1	
1A7000	I	A3	123		5/1	
1B8000	I	B2	254		5/1	
1CLK00	I	CLK	333		5/1	
1CURPRN	OT	-CURPR	012		5/1	
1CURPRP	OT	+CURPR	112		5/1	
1DRIN0	O	DWOUT	323		6/1,6/2 6/3,6/4 6/5,6/6 6/7,6/8 5/1	
1DWOUT0	I	DRIN	233		5/1	
1JR00	IO	JR00	202		6/1 TO CONN CKT	
1JR01	IO	JR01	203		6/1 TO CONN CKT	
1JR02	IO	JR02	044		6/1	
1JR03	IO	JR03	244		6/1	
1JT00	IO	JT00	302		6/1 TO CONN CKT	
1JT01	IO	JT01	303		6/1 TO CONN CKT	
1JT02	IO	JT02	144		6/1	
1JT03	IO	JT03	344		6/1	
1READ0	I	READ	133		5/1	
1WRITE0	I	WRITE	033		5/1	

PART OF FS 7
SYMBOL(S) 1

COPYRIGHT (c) 1988 AT&T
ALL RIGHTS RESERVED

MODULAR METALLIC SERVICE UNIT

DWG SIZE E2 | ISSUE 5A

AT&T | SD-5D015-01 | B7CA

PRINTED IN U.S.A.

PART OF FS 8

POWER - SERVICE GROUP 1
(P/O INTERCONNECTION & FLOW DIAGRAM)

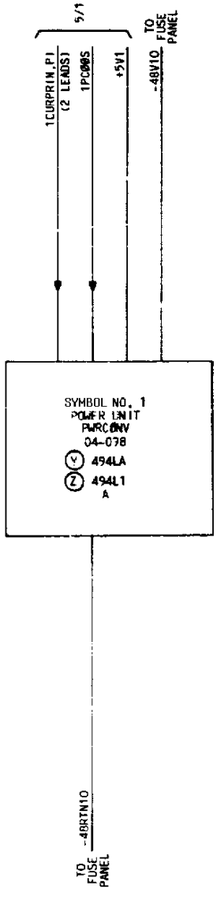

Copyright 1988 AT&T
All Rights Reserved

MODULAR METALLIC SERVICE UNIT		DWG SIZE: 8S	ISSUE: 5A
AT&T	SD-50015-01		B8AA

PART OF FS 8

POWER - SERVICE PROUP 1

SYMBOL NO. 1

POWER UNIT

DESIG	EQPT LOC	CODE	ELEM IDENT	OPT
PWRCONV	04-098	494LA	A	(Y)
PWRCONV	04-098	494L1	A	(Z)

LEAD DESIG	FUNC	TERM. MOD	TERM.	TERM. OPT	DESTINATION	NOTE
NC	PWR	RS4	010			
	PWR	INT	012			
	PWR	ALM2	014			
	PWR	INT	112			
	PWR	ALM1	113			
+5V1	PWR	OOS(+)	015		5/1	
	PWR	VOUT1(+)	045		5/1	
	PWR	VOUT1(+)	046		5/1	
	PWR	VOUT1(+)	047		5/1	
	PWR	VOUT1(+)	048		5/1	
	PWR	VOUT1(+)	049		5/1	
	PWR	VOUT1(+)	050		5/1	
	PWR	VOUT1(+)	051		5/1	
	PWR	VOUT1(+)	052		5/1	
	PWR	VOUT1(+)	053		5/1	
	PWR	VOUT1(+)	054		5/1	
	PWR	VOUT1(+)	055		5/1	
	PWR	VOUT1(+)	056		5/1	
	PWR	SB(+)	118		5/1	
	PWR	VOUT1(+)	145		5/1	
	PWR	VOUT1(+)	146		5/1	
	PWR	VOUT1(+)	147		5/1	
	PWR	VOUT1(+)	148		5/1	
	PWR	VOUT1(+)	149		5/1	
	PWR	VOUT1(+)	150		5/1	
	PWR	VOUT1(+)	151		5/1	
	PWR	VOUT1(+)	152		5/1	
	PWR	VOUT1(+)	153		5/1	
	PWR	VOUT1(+)	154		5/1	
	PWR	VOUT1(+)	155		5/1	
-48RTN10	PWR	VOUT1(+)	156		5/1	
	GRD	VIN(+)	003			
	GRD	VIN(+)	004			
	GRD	VIN(+)	005		TF FUSE PANEL	
	GRD	VIN(+)	102			
	GRD	VIN(+)	103			
	GRD	VIN(+)	104			
-48V10	PWR	VIN(-)	006		TO FUSE PANEL	
	PWR	VIN(-)	007			
	PWR	VIN(-)	008			
	PWR	VIN(-)	106			
	PWR	VIN(-)	107			
	PWR	VIN(-)	108			
GRD04098	GRD	FRGRD	000			
	GRD	FRGRD	001			
	GRD	VOUT1(-)	032			
	GRD	VOUT1(-)	033			
	GRD	VOUT1(-)	034			
	GRD	VOUT1(-)	035			
	GRD	VOUT1(-)	036			
	GRD	VOUT1(-)	037			
	GRD	VOUT1(-)	038			
	GRD	VOUT1(-)	039			
	GRD	VOUT1(-)	040			
	GRD	VOUT1(-)	041			
	GRD	VOUT1(-)	042			
	GRD	VOUT1(-)	043			
	GRD	FRGRD	100			
	GRD	FRGRD	101			
	GRD	S(-)	119			

SYMBOL NO. 1 (CONT)

POWER UNIT

DESIG	EQPT LOC	CODE	ELEM IDENT	OPT
PWRCONV	04-098	494LA	A	(Y)
PWRCONV	04-098	494L1	A	(Z)

LEAD DESIG	FUNC	TERM. MOD	TERM.	TERM. OPT	DESTINATION	NOTE
	GRD	VOUT1(-)	132			
	GRD	VOUT1(-)	133			
	GRD	VOUT1(-)	134			
	GRD	VOUT1(-)	135			
	GRD	VOUT1(-)	136			
	GRD	VOUT1(-)	137			
	GRD	VOUT1(-)	138			
	GRD	VOUT1(-)	139			
	GRD	VOUT1(-)	140			
	GRD	VOUT1(-)	141			
	GRD	VOUT1(-)	142			
	GRD	VOUT1(-)	143			
MINOR1N	GRD	VOUT2(-)	022			
	GRD	VOUT2(-)	023			
	GRD	VOUT2(-)	122			
MINOR1P	PWR	VOUT2(+)	024			
	PWR	VOUT2(+)	123			
	PWR	VOUT2(+)	124			
1CURPRN	I	CP(-)	117		5/1	
1CURPRP	I	CP(+)	017		5/1	
1PCOOS	I	OOS(-)	115		5/1	
1SACS	I	SA(+)	018			
	I	SC(+)	019			
1S1S2	PWR	RS1	011	(T)	(T)8/1	313
	I	RS2	110	(T)	(T)8/1	313
1S2S3	I	RS3	109			

PART OF FS 8
SYMBOL(S) 1

COPYRIGHT © 1982 AT&T
ALL RIGHTS RESERVED

MODULAR METALLIC SERVICE UNIT

DWG SIZE D2 | ISSUE 8B

AT&T | SD-5D015-01 | B8CA

PRINTED IN U.S.A.

FS 9 Ⓤ

MTB 15 DIODE RESISTOR NETWORK

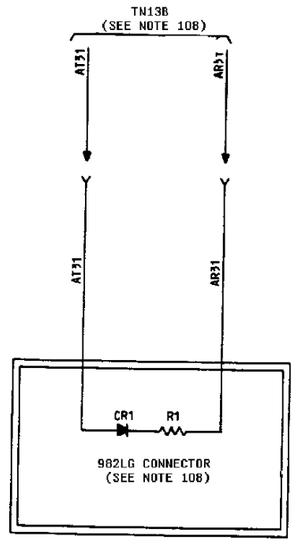

Copyright 1988 AT&T
All Rights Reserved

MODULAR METALLIC SERVICE UNIT		DWG SIZE 86	ISSUE 6M
AT&T	SD-5D015-01		SHEET B9AA

APP FIG. 1

WIRING AS PER FS 1-8

APP FIG. 2

SEE SHEET C2

APP FIG. 3-19,21

EQPT LOC DESIG FS/SYM ELEM IDENT	SEE FS 2 (TABLE A1) SEE FS 2 (TABLE A1) 2/1-8 CKT A		SEE FS 6 (TABLE(B) SEE FS 6 (TABLE B) 6/1-8 CKT A	
OPTION	CODE		OPTION	CODE
(3)	TN138		(3)	TN138
(4)	TN2208		(4)	TN2208
(5)	TN221		(5)	TN221
(6)	TN928		(6)	TN928
(7)	TN329		(7)	TN329
(8)	TN330		(8)	TN330
(9)	TN880		(9)	TN880
(10)	TN1040		(10)	TN1040
(11)	TN1538		(11)	TN1538
(12)	TN1539		(12)	TN1539
(13)	TN1540		(13)	TN1540
(14)	TN1613		(14)	TN1613
(15)	TN1614		(15)	TN1614
(16)	TN1615		(16)	TN1615
(17)	TN328B		(17)	TN328B
(18)	TN329B		(18)	TN329B
(19)	TN330B		(19)	TN330B
(21)	TN1636		(21)	TN1636

APP FIG. 20

982LG CONNECTOR

Copyright© 1988 AT&T
All Rights Reserved

MODULAR METALLIC SERVICE UNIT	DWG SIZE 83	ISSUE 7B
AT&T	SD-50015-01	C1

APP FIG. 2

CIRCUIT PACK

EQPT LOC	04-010		04-010		04-018		04-090		04-098		04-098		04-106		04-178		EQPT LOC
DESIG	PWRCONV		PWRCONV		OCOMM		OACC8		PWRCONV		PWRCONV		1COMM		1ACC8		DESIG
CODE	494LA		494L1		TN879		TN138		494LA		494L1		TN879		TN138		CODE
OPTION	Y		Z				X		Y		Z				X		OPTION
ELEM IDENT		CKT		CKT		CKT		CKT		CKT		CKT		CKT		CKT	ELEM IDENT
CKT	DESIG	FS/SYM	DESIG	FS/SYM	DESIG	FS/SYM	DESIG	FS/SYM	DESIG	FS/SYM	DESIG	FS/SYM	DESIG	FS/SYM	DESIG	FS/SYM	CKT
A		4/1		4/1		1/1		3/1		8/1		8/1		5/1		7/1	A

GRD SHIELD

OPTION	DESIG	FS/SYM	CODE
W	04-090	3/2	E07C384-30,G3,NOTE 309

COPYRIGHT(C) 1988 AT&T
ALL RIGHTS RESERVED

MODULAR METALLIC SERVICE UNIT

DWG SIZE	ISSUE
C2	5A

AT&T	SD-5D015-01	C2

PRINTED IN U.S.A.

CIRCUIT NOTES:

101.

DES16	FUSE AMP	POTENTIAL	ONE PER
BATTERY SYMBOL		VOLTAGE RANGE	

102. (REFER TO NOTE 201).

103. THE PROTOCOL CIRCUIT FOR TESTING THE METALLIC TEST BUSES WILL BE CONNECTED AS SHOWN BELOW. FOR CLARITY PURPOSES, EACH MTIB'S TIP & RING IS SHOWN AS ONE WIRE. ALL WIRING SHOWN IS MADE VIA BACKPLANE WIRES AND BY BACKPLANE MTIB CABLES. FOR ADDITIONAL INFORMATION, REFER TO THE 5ESS ASSIGNMENT RULES.

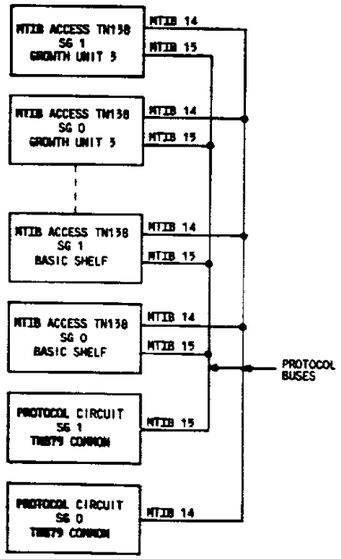

(DA) 104. WHEN AN MMSU SERVICE GROUP IS EQUIPPED WITH METALLIC ACCESS PACK(S) ONE MTB (MTB 15) ON EACH PACK MUST BE DEDICATED TO PROVIDE A TERMINATION FOR TN138 DIAGNOSTICS AND FOR TESTING THE PROTOCOL CIRCUIT. A 593K DIODE, OR EQUIVALENT, IN SERIES WITH A 402 OHM KS-20269 L6C RESISTOR MOUNTED ON A PADDLE BOARD WHICH PLUGS IN AT THE RESISTOR PANEL (SD-90044-01). THE TERMINATION IS CONNECTED ACROSS THE TIP AND RING OF THE MTB AS SHOWN BELOW BY PROVIDING THE APPROPRIATE CROSS CONNECTIONS ON THE MDF.

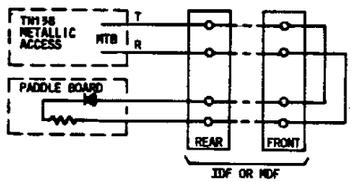

105. WHEN AN MMSU SERVICE GROUP IS EQUIPPED WITH A METALLIC ACCESS PACK (TN138) ALL UNUSED MTB'S MUST BE TERMINATED WITH A CONNECTION BETWEEN TIP AND RING. THIS CONNECTION WILL BE MADE BY PLUGGING A PADDLE BOARD, WITH A STRAP BETWEEN TIP & RING, ON TO THE MMSU BACKPLANE UNUSED MTB LOCATION.

106.

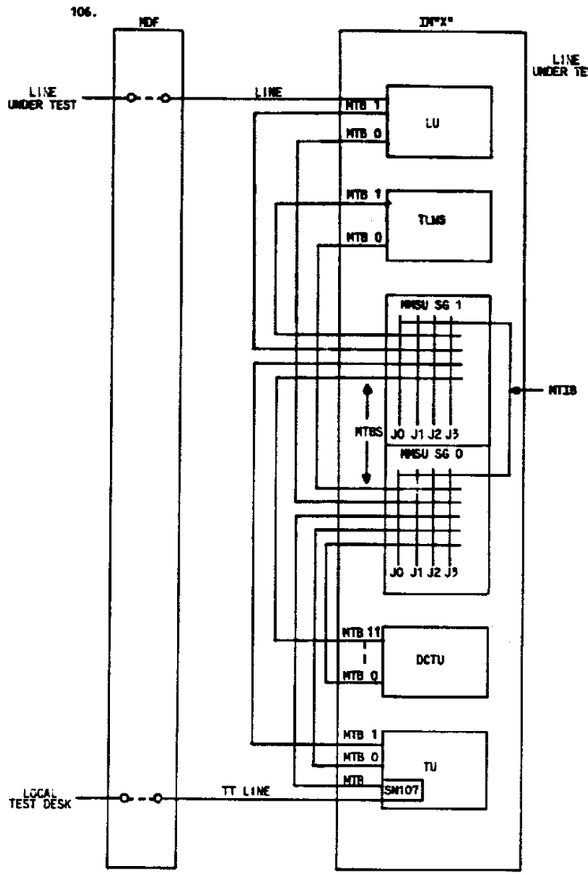

TYPICAL SINGLE INTERFACE MODULE CONFIGURATION USING THE J50003BD-1 MMSU.

106.(CONT)

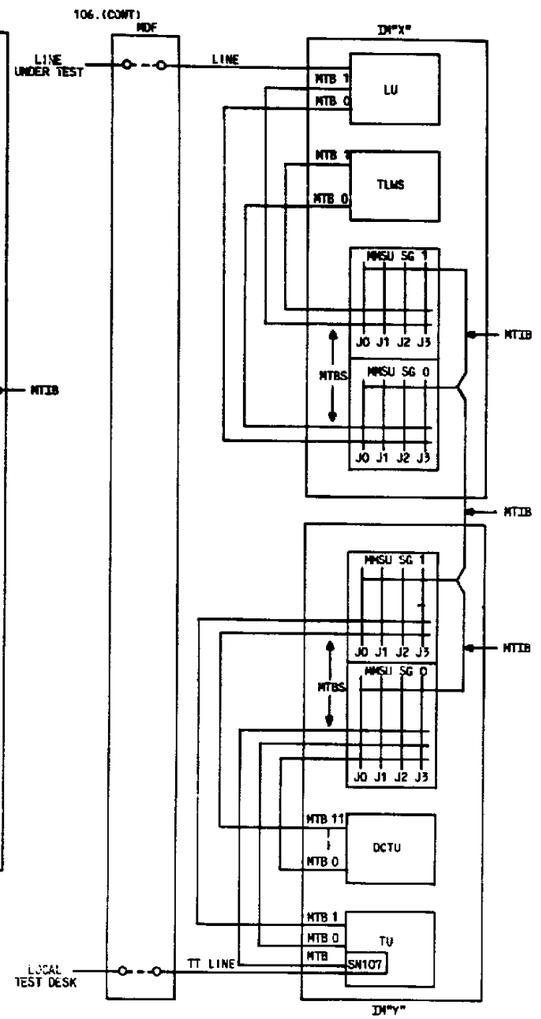

TYPICAL MULTIPLE MSU CONFIGURATION USING THE J50003BD-1 MMSU'S.

Copyright 1988 AT&T
All Rights Reserved

MODULAR METALLIC SERVICE UNIT	DWG SIZE D	ISSUE 6M
AT&T	3B— 50015-01	SHEET D1

CIRCUIT NOTES: (CONT)
106.(CONT)

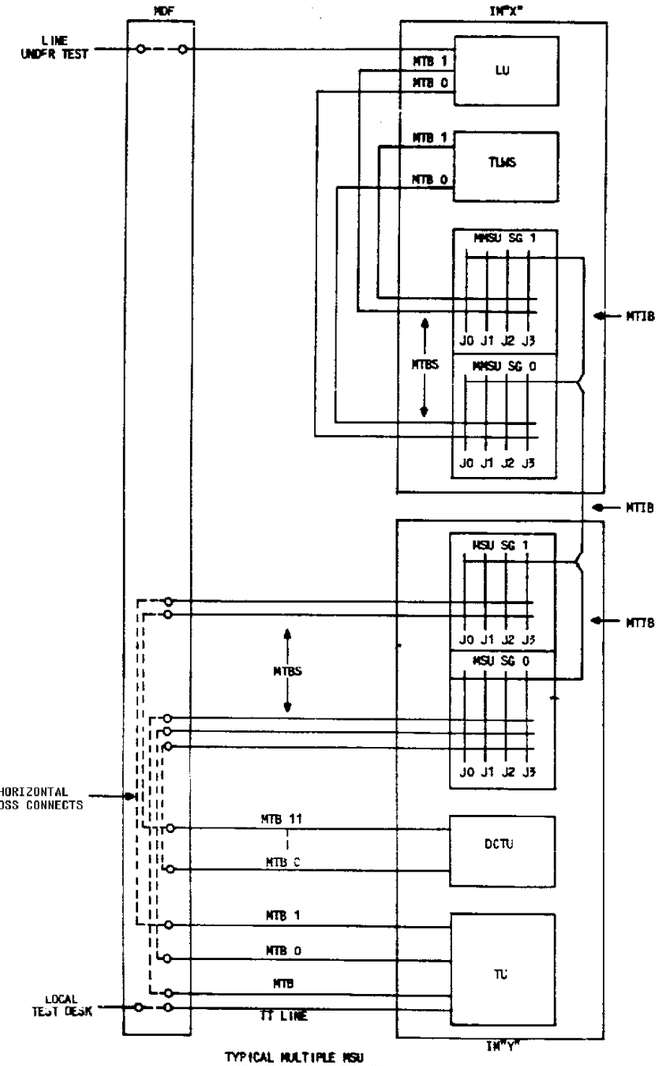

TYPICAL MULTIPLE MSU CONFIGURATION USING THE J50005AL-2 MSU AND THE J50005BD-1 MMSU.

CIRCUIT NOTES: (CONT)
106.(CONT)

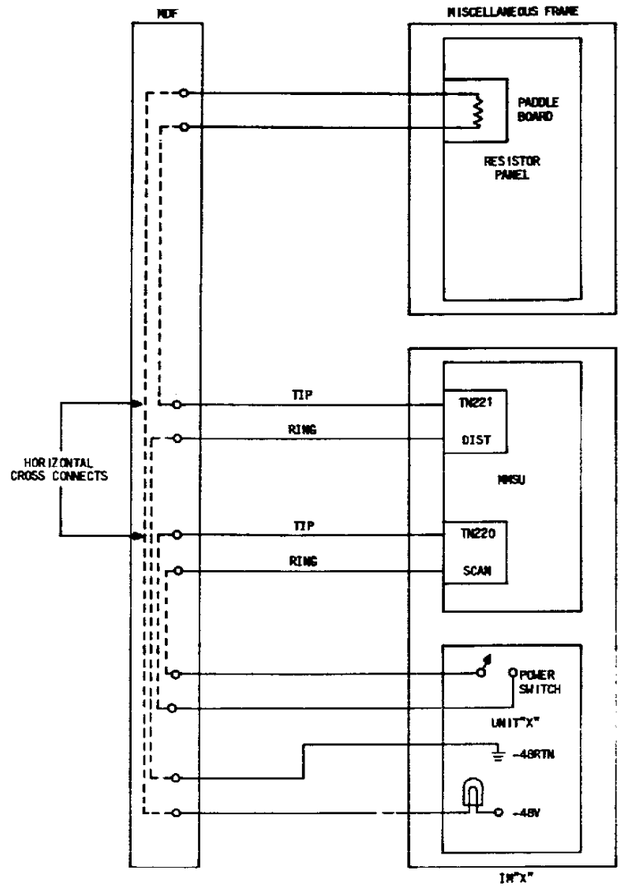

TYPICAL SCAN AND DISTRIBUTE FUNCTIONS IN A SINGLE INTERFACE MODULE USING THE J50005BD-1 MMSU.

MODULAR METALLIC SERVICE UNIT	DWG SIZE D	ISSUE 4D
AT&T BELL LABORATORIES	SD-5D015-01	SHEET D2

CIRCUIT NOTES: (CONT)

107.

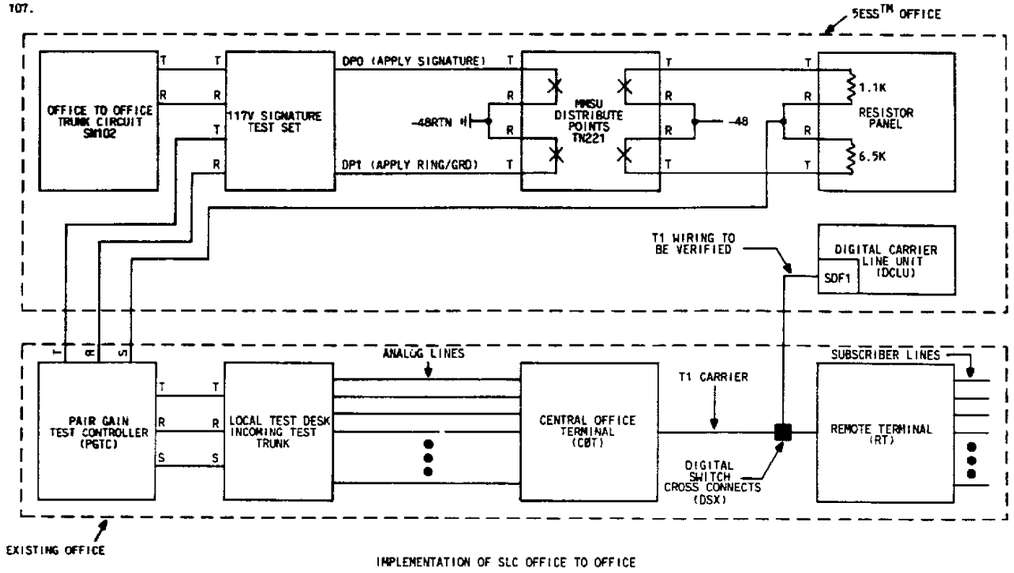

IMPLEMENTATION OF SLC OFFICE TO OFFICE

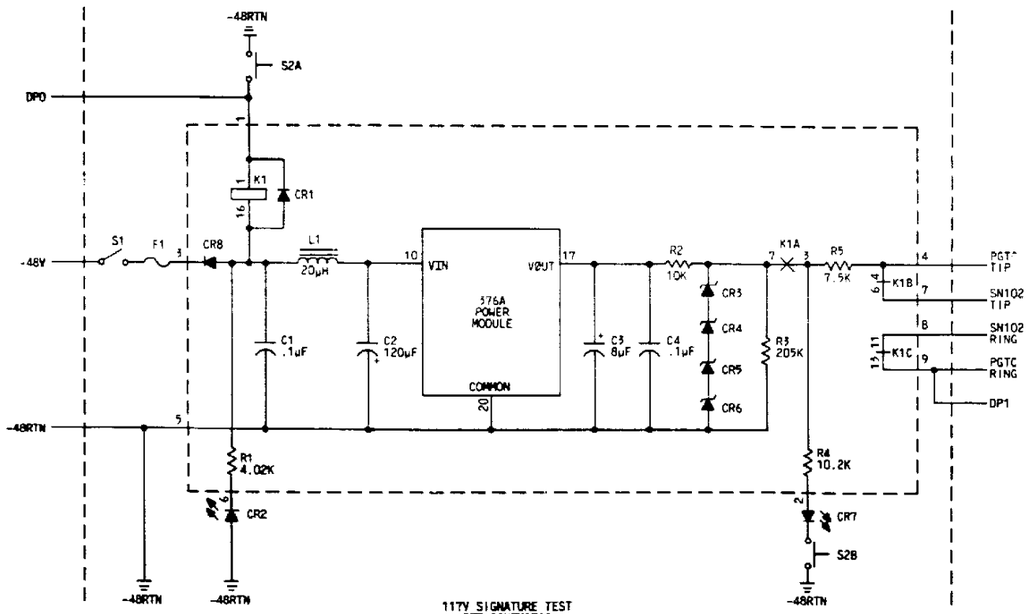

117V SIGNATURE TEST SET SCHEMATIC (USED IN SLC OFFICE TO OFFICE)

CIRCUIT NOTES: (CONT)

106. WHEN A MMSU SERVICE GROUP IS EQUIPPED WITH METALLIC ACCESS PACK(S) ONE MTB (MTB 15) ON EACH PACK MUST BE DEDICATED TO PROVIDE A TERMINATION FOR TM138 DIAGNOSTIC AND TESTING THE PROTOCAL CIRCUIT. AN 9821G CONNECTOR OR 34B DIODE RESISTOR NETWORK (APP 20) PADDLE BOARD IS PLUGGED INTO THE BACKPLANE AT THE LOCATION OF THE ASSOCIATED TM138 CIRCUIT PACK ON THE MMSU AS REQUIRED.

EQUIPMENT NOTES:

201. UNLESS OTHERWISE SPECIFIED, ALL BACKPLANE WIRING WILL BE AUTOMATIC MODULE WIRING (A-04) 30 GAUGE WHICH HAS BEEN PROCESSED BY THE MESSAGE PROCESSOR.

202. ALL PRINTED WIRING CONNECTIONS ARE SPECIFIED BY ED-50012.

Copyright 1988 AT&T
All Rights Reserved

MODULAR METALLIC SERVICE UNIT	DWG SIZE: B3	ISSUE: 6M
AT&T	SD-5D015-01	D3

INFORMATION NOTES:

301. UNLESS OTHERWISE SPECIFIED:
RESISTANCE VALUES ARE IN OHMS.
CAPACITANCE VALUES ARE IN MICROFARADS.
VALUES PRECEDED BY THE SYMBOL + (PLUS) OR - (MINUS) ARE IN VOLTS.

302.

FEATURE OR OPTION			PROVIDE		
			APP FIG	APP OR WRG	QUANTITY
MINIMUM EQUIPAGE		WIRING	1		1 PER UNIT (SEE NOTES 307 & 309)
		COMMON PACKS (TN879)	2		
		POWER CONVERTER (494L1)		Z	
		POWER CONVERTER (494LA)		Y	
		METALLIC ACCESS PACKS (TN138)		X	
		GROUND SHIELD (ED7C384-30,G3)		W	
METALLIC ACCESS CIRCUIT PACK - 16 METALLIC ACCESS LINES/PACK (TN138)			3	V	
SCAN POINT CIRCUIT PACK 32 SCAN POIN.S/PACK TN2208			4		
SIGNAL DISTRIBUTE POINT CIRCUIT PACK - 32 DISTRIBUTE POINTS/PACK (TN221)			5		
AL1T - A CIRCUIT PACK FOR REGIONS WITH MEDIUM HUMIDITY (TN329)			6		
AL1T - B CIRCUIT PACK FOR REGIONS WITH LOW HUMIDITY (TN330)			7		
AL1T - C CIRCUIT PACK FOR REGIONS WITH HIGH HUMIDITY (TN328)			8		
GDX COMPENSATOR CIRCUIT PACK (TN880)			9		AS REQUIRED
DISTRIBUTING FRAME TEST ACCESS CIRCUIT (TN1040)			10		SEE NOTE 306
INTERNATIONAL ONLY	ALIT CIRCUIT PACK FOR REGIONS WITH (SEE NOTE 310)	HIGH HUMIDITY (TN1538)	11		MAXIMUM 16 PACKS PER UNIT
		MEDIUM HUMIDITY (TN1539)	12		
		LOW HUMIDITY (TN1540)	13		
	ALIT CIRCUIT PACK FOR REGIONS WITH (SEE NOTE 311)	HIGH HUMIDITY (TN1613)	14		
		MEDIUM HUMIDITY (TN1614)	15		
		LOW HUMIDITY (TN1615)	16		
		VERY HIGH HUMIDITY (TN1636)	21		
DOMESTIC ONLY	ALIT CIRCUIT PACK FOR REGIONS WITH	HIGH HUMIDITY (TN328B)	17		
		MEDIUM HUMIDITY (TN329B)	18		
		LOW HUMIDITY (TN330B)	19		
TERMINATION FOR TN138 DIAGNOSTIC AND TESTING THE PROTOCAL CIRCUIT			20		AS REQUIRED
AUTO RESTART				T	1/CKT

INFORMATION NOTES (CONT):

303.

RECORD OF APP FIGURES, WIRING AND APPARATUS CHANGES						
CHANGES ON ISSUE	IF JOE RECORDS DO NOT SPECIFY	THIS OPTION WAS FURN	SEE NOTE	USE IN CIRCUIT		
				STD	A&M	MD
3A	X OR W	X	309	X OR W		
				AVAIL		DA
5A SEE NOTE 1	APP FIG. 11 TO 16, APP FIG. 17 TO 19	APP FIG. 6 TO 8	310, 311	APP FIG. 11 TO 16		
				APP FIG. 17 TO 19		..
6N	V OR U	V	108	U		V
7B	APP FIG. 21	NONE	311	APP FIG. 21		
8B		NONE	313	T		

NOTE 1 - PRIOR TO ISSUE 5A, COLUMNS HEADED "STD", "MD", ETC., CONVEYED APPLICATION INFORMATION. AT ISSUE 5A, COLUMNS HEADED "AVAIL" AND "DA" NOW INDICATE THE AVAILABILITY OF THE PRODUCT.

304.

CIRCUIT PACK CODE OR MICROCODE	COMMON LANGUAGE EQUIPMENT IDENTIFICATION CODE (CLEI)
ED7C384-50,G3	E5PQQ01AAA
MC5X268A1(TN1538)	E5MQ54GAXX
MC5X26SA1(TN1613)	E5MQ54JAXX
MC5X270A1(TN1539)	E5MQ54HAXX
MC5X271A1(TN1614)	E5MQ54KAXX
MC5X272A1(TN1540)	E5MQ54LAXX
MC5X273A1(TN1615)	E5MQ54MAXX
MC5X282A1(TN1636)	E5MQBBRAXX
TN138	E5PQ12EAXX
TN221	E5PQ14HAXX
TN328	E5MQ54RAXX
TN328B	E5MQ38CAXX
TN329	E5MQ54SAXX
TN329B	E5MQ38DAXX
TN330	E5MQ54TAXX
TN330B	E5MQ38EAXX
TN879	E5PQ51TAXX
TN880	E5PQ31UAXX
TN1040	E5PQ41AAXX
494LA	PWPQ53XAXX
494L1	PWPQ20LAXX

INFORMATION NOTES (CONT):

305. CONNECTIONS TO EXTERNAL UNITS, SUCH AS THE DISTRIBUTION FRAME (DF). SEE THE INTERFACE MODULE APPLICATION SCHEMATIC DRAWING.

306. ANY ONE OF THESE EQUIPMENT LOCATIONS CAN BE EQUIPPED WITH ANY COMBINATION OF OPTIONED PACKS: (APP FIG. 3-19.21) AS REQUIRED BY OFFICE ENGINEERING.

04-026	04-114
04-034	04-122
04-042	04-130
04-050	04-138
04-058	04-146
04-066	04-154
04-074	04-162
04-082	04-170

307. TN879'S ARE ONLY REQUIRED IN THE BASIC UNIT. THE THREE POSSIBLE GROWTH UNITS DO NOT REQUIRE THEM.

308. J50003BD-1: LIST 3; WHICH SPECIFIES ORDERING INFORMATION FOR THE MMSU MUST INCLUDE TWO TN138 METALLIC ACCESS PACKS IN LOCATIONS 04-090 AND 04-178 TO PERMIT INTERCONNECTION OF THE MMSU SERVICE GROUPS AT ALL TIMES (LIST 10).

309. GROUND SHIELD (ED7C384-30,G3) MUST BE USED WHEN MMSU IS NOT EQUIPPED WITH A TN138 IN EQL 04-090. NO ELECTRICAL CONNECTION IS MADE TO GROUND SHIELD.

310. THE INTERNATIONAL STANDARD TYPE ALIT CIRCUIT PACKS ARE:

MC5X268A1(TN1538) (HIGH HUMIDITY)
MC5X270A1(TN1539) (MEDIUM HUMIDITY)
MC5X272A1(TN1540) (LOW HUMIDITY)

311. THE INTERNATIONAL NON-STANDARD TYPE ALIT CIRCUIT PACKS ARE:

MC5X269A1(TN1613) (HIGH HUMIDITY)
MC5X271A1(TN1614) (MEDIUM HUMIDITY)
MC5X273A1(TN1615) (LOW HUMIDITY)
MC5X282A1(TN1636) (VERY HIGH HUMIDITY)

COUNTRIES CURRENTLY SCHEDULED TO USE THESE PACKS ARE TAIWAN, REPUBLIC OF KOREA, PEOPLES REPUBLIC OF CHINA, OR COMPATABLE COUNTRIES. PHONES IN THESE COUNTRIES EXPERIENCED BELL TAPPING WITH THE INTERNATIONAL STANDARD ALIT CIRCUIT PACKS. (THIS VERSION TAKES 10% ADDITIONAL TIME FOR ALIT TESTS).

Copyright 1992 AT&T
All Rights Reserved

MODULAR METALLIC SERVICE UNIT

DWG SIZE: 6S
ISSUE: 8B

AT&T | SD- 5D015-01 | SHEET: D4

INFORMATION NOTES (CONT):

312. TERMINAL INDEX TN138 (3)

TERM.NO.	TI	TERM. MODIFIER	TERM.NO.	TI	TERM. MODIFIER	TERM.NO.	TI	TERM. MODIFIER	TERM.NO.	TI	TERM. MODIFIER
356	G	EGRD	256	G	EGRD	156	G	EGRD	056	G	EGRD
355	G	GRD	255	G	GRD	155	G	GRD	055	G	GRD
354	I	MRST	254			154			054	I	BO
353	G	GRD	253	G	GRD	153	G	GRD	053	G	GRD
352			252			152			052		
351			251			151			051		
350			250			150			050		
349			249			149			049		
348			248			148			048		
347			247			147			047		
346			246			146			046		
345			245			145			C45		
344	IØ	JTO3	244	IØ	JRO3	144	IØ	JTO2	044	IØ	JRO2
343			243	P	+15	143			043		
342			<42	P	-15	142			042		
341			241	P	+5A	141			041		
340			240	IØ	FTEST	140			040		
339			239	IØ	LEARN2	139			059		
338			238	I	INP1	138			038		
337			237	I	INPO	137			037		
336			236			136			036		
335	G	GRD	235	G	GRD	135	P	+5	035	P	+5
334	G	GRD	234	G	GRD	134	P	+5	034	P	+5
333	I	CLK	233	I	DRIN	133	IØ	READ	033	I	WRITE
332	G	GRD	232	G	GRD	132			032		
324	G	GRD	224	G	GRD	124			024		
323	IØ	DWØUT	223	Ø	SRVRØ	123			023		
322			222	Ø	ASWO	122			022	I	AO
321	G	GRD	221	G	GRD	121	G	GRD	021	G	GRD
320			220			120			020		
319			219			119			019		
318	I	TST	218			118	IØ	LEARN1	018		
317			217			117	P	+RTN	017		
316			216			116			016		
315			215			115	P	-RTN	015		
314			214			114			014		
313			213			113			013		
312			212			112	P	+CURPR	012	P	-CURPR
311			211			111			011		
310			210			110			010		
309			209			109			009		
308			208			108			008		
307			207			107			007		
306			206			106			006		
305			205			105			005		
304			204			104			004		
303	IØ	JTO1	203	IØ	JRO1	103			003		
302	IØ	JTO0	202	IØ	JRO0	102			002		
301	P	-48RTN	201	P	-48RTN	101	P	-48V	001	P	-48V
300	P	-48RTN	200	P	-48RTN	100	P	-48V	000	P	-48V

INFORMATION NOTES (CONT):

312.(CONT) TERMINAL INDEX TN880 (9)

TERM.NO.	TI	TERM. MODIFIER	TERM.NO.	TI	TERM. MODIFIER	TERM.NO.	TI	TERM. MODIFIER	TERM.NO.	TI	TERM. MODIFIER
356			256			156			056		
355			255			155			055		
354	I	MRST	254	I	B2	154			054		
353	G	GRD	253	G	GRD	153	G	GRD	053	G	GRD
352	IØ	AT31	252	IØ	AR31	152			052		
351	IØ	AT30	251	IØ	AR30	151			051		
350	IØ	AT29	250	IØ	AR29	150			050		
349	IØ	AT28	249	IØ	AR28	149			049		
348	IØ	AT27	248	IØ	AR27	148			048		
347	IØ	AT26	247	IØ	AR26	147			047		
346	IØ	AT25	246	IØ	AR25	146			046		
345	IØ	AT24	245	IØ	AR24	145			045		
344	IØ	JTO3	244	IØ	JRO3	144	IØ	JTO2	044	IØ	JRO2
343			243			143			043		
342			242			142			042		
341			241			141			041		
340			240			140			040		
339			239			139			039		
338			238			138			038		
337			237			137			037		
336			236			136			036		
335	G	GRD	235	G	GRD	135	P	+5	035	P	+5
334	G	GRD	234	G	GRD	134	P	+5	034	P	+5
333	I	CLK	233	I	DRIN	133	I	READ	033	I	WRITE
332	G	GRD	232	G	GRD	132			032		
324	G	GRD	224	G	GRD	124			024		
323	Ø	DWØUT	223	Ø	INT	123	I	A3	023		
322	Ø	ASW1	222	Ø	ASWO	122			022		
321	G	GRD	221	G	GRD	121	G	GRD	021	G	GRD
320			220			120			020		
319			219			119			019		
318			218			118			018		
317			217			117			017		
316			216			116			016		
315			215			115			015		
314			214			114			014		
313			213			113			013		
312			212			112	Ø	+CURPR	012	Ø	-CURPR
311	I/Ø	AT23	211	I/Ø	AR23	111			011		
310	I/Ø	AT22	210	I/Ø	AR22	110			010		
309	I/Ø	AT21	209	I/Ø	AR21	109			009		
308	I/Ø	AT20	208	I/Ø	AR20	108			008		
307	I/Ø	AT19	207	I/Ø	AR19	107			007		
306	I/Ø	AT18	206	I/Ø	AR18	106			006		
305	I/Ø	AT17	205	I/Ø	AR17	105			005		
304	I/Ø	AT16	204	I/Ø	AR16	104			004		
303	IØ	JTO1	203	IØ	JRO1	103			003		
302	IØ	JTO0	202	IØ	JRO0	102			002		
301			201			101			001		
300			200			100			000		

Copyright 1988 AT&T
All Rights Reserved

MODULAR METALLIC SERVICE UNIT		DWG SIZE 65	ISSUE 5A
AT&T	SD-50015-01		SHEET D5

INFORMATION NOTES (CONT):

312.(CONT) TERMINAL INDEX TN220B (4)

TERM.NO.	TI	TERM. MODIFIER	TERM.NO.	TI	TERM. MODIFIER	TERM.NO.	TI	TERM. MODIFIER	TERM.NO.	TI	TERM. MODIFIER
356			256			156			056		
355			255			155			055		
354	I	MRST	254	I	B2	154	I	B1	054	I	B0
353	G	GRD	253	G	GRD	153	G	GRD	053	G	GRD
352	I	AT31	252	I	AR31	152	I	AT15	052	I	AR15
351	I	AT30	251	I	AR30	151	I	AT14	051	I	AR14
350	I	AT29	250	I	AR29	150	I	AT13	050	I	AR13
349	I	AT28	249	I	AR28	149	I	AT12	049	I	AR12
348	I	AT27	248	I	AR27	148	I	AT11	048	I	AR11
347	I	AT26	247	I	AR26	147	I	AT10	047	I	AR10
346	I	AT25	246	I	AR25	146	I	AT09	046	I	AR09
345	I	AT24	245	I	AR24	145	I	AT08	045	I	AR08
344			244			144			044		
343			243			143			043		
342			242			142			042		
341			241			141			041		
340			240			140			040		
339			239			139			039		
338			238			138			038		
337			237			137			037		
336			236			136			036		
335	G	GRD	235	G	GRD	135	P	+5	035	P	+5
334	G	GRD	234	G	GRD	134	P	+5	034	P	+5
333	I	CLK	233	I	DRIN	133	I	READ	033	I	WRITE
332	G	GRD	232	G	GRD	132			032	I	INTCONT
324	G	GRD	224	G	GRD	124	I	A5	024	I	A4
323	Ø	DWOUT	223	Ø	INT	123	I	A3	023	I	A2
322	Ø	ASW1	222	Ø	ASW0	122	I	A1	022	I	A0
321	G	GRD	221	G	GRD	121	G	GRD	021	G	GRD
320			220			120			020		
319			219			119			019		
318			218			118			018		
317			217			117			017		
316			216			116			016		
315			215			115			015		
314			214			114			014		
313			213			113			013		
312			212			112	Ø	+CURPR	012	Ø	-CURPR
311	I	AT23	211	I	AR23	111	I	AT07	011	I	AR07
310	I	AT22	210	I	AR22	110	I	AT06	010	I	AR06
309	I	AT21	209	I	AR21	109	I	AT05	009	I	AR05
308	I	AT20	208	I	AR20	108	I	AT04	008	I	AR04
307	I	AT19	207	I	AR19	107	I	AT03	007	I	AR03
306	I	AT18	206	I	AR18	106	I	AT02	006	I	AR02
305	I	AT17	205	I	AR17	105	I	AT01	005	I	AR01
304	I	AT16	204	I	AR16	104	I	AT00	004	I	AR00
303			203			103			003		
302			202			102			002		
301	G	-48RTN	201	G	-48RTN	101	P	-48	001	P	-48
300	G	-48RTN	200	G	-48RTN	100	P	-48	000	P	-48

INFORMATION NOTES (CONT):

312.(CONT) TERMINAL INDEX TN221 (5)

TERM.NO.	TI	TERM. MODIFIER	TERM.NO.	TI	TERM. MODIFIER	TERM.NO.	TI	TERM. MODIFIER	TERM.NO.	TI	TERM. MODIFIER
356			256			156			056		
355			255			155			055		
354	I	MRST	254	I	B2	154			054		
353	G	GRD	253	G	GRD	153	G	GRD	053	G	GRD
352	Ø	AT31	252	Ø	AR31	152	Ø	AT15	052	Ø	AR15
351	Ø	AT30	251	Ø	AR30	151	Ø	AT14	051	Ø	AR14
350	Ø	AT29	250	Ø	AR29	150	Ø	AT13	050	Ø	AR13
349	Ø	AT28	249	Ø	AR28	149	Ø	AT12	049	Ø	AR12
348	Ø	AT27	248	Ø	AR27	148	Ø	AT11	048	Ø	AR11
347	Ø	AT26	247	Ø	AR26	147	Ø	AT10	047	Ø	AR10
346	Ø	AT25	246	Ø	AR25	146	Ø	AT09	046	Ø	AR09
345	Ø	AT24	245	Ø	AR24	145	Ø	AT08	045	Ø	AR08
344			244			144			044		
343			243			143			043		
342			242			142			042		
341			241			141			041		
340			240			140			040		
339			239			139			039		
338			238			138			038		
337			237			137			037		
336			236			136			036		
335	G	GRD	235	G	GRD	135	P	+5	035	P	+5
334	G	GRD	234	G	GRD	134	P	+5	034	P	+5
333	I	CLK	233	I	DRIN	133	I	READ	033	I	WRITE
332	G	GRD	232	G	GRD	132			032		
324	G	GRD	224	G	GRD	124			024		
323	Ø	DWOUT	223			123	I	A3	023		
322	Ø	ASW1	222	Ø	ASW0	122			022		
321	G	GRD	221	G	GRD	121	G	GRD	021	G	GRD
320			220			120			020		
319			219			119			019		
318			218			118			018		
317			217			117			017		
316			216			116			016		
315			215			115			015		
314			214			114			014		
313			213			113			013		
312			212			112	Ø	+CURPR	012	Ø	-CURPR
311	Ø	AT23	211	Ø	AR23	111	Ø	AT07	011	Ø	AR07
310	Ø	AT22	210	Ø	AR22	110	Ø	AT06	010	Ø	AR06
309	Ø	AT21	209	Ø	AR21	109	Ø	AT05	009	Ø	AR05
308	Ø	AT20	208	Ø	AR20	108	Ø	AT04	008	Ø	AR04
307	Ø	AT19	207	Ø	AR19	107	Ø	AT03	007	Ø	AR03
306	Ø	AT18	206	Ø	AR18	106	Ø	AT02	006	Ø	AR02
305	Ø	AT17	205	Ø	AR17	105	Ø	AT01	005	Ø	AR01
304	Ø	AT16	204	Ø	AR16	104	Ø	AT00	004	Ø	AR00
303			203			103			003		
302			202			102			002		
301			201			101			001		
300			200			100			000		

Copyright 1988 AT&T
All Rights Reserved

MODULAR METALLIC SERVICE UNIT

DWG SIZE: 6S

ISSUE: 5A

AT&T | SD-50015-01

SHEET: D6

INFORMATION NOTES (CONT):

312.(CONT) TERMINAL INDEX TN1040 (10)

TERM.NO.	TI	TERM. MODIFIER	TERM.NO.	TI	TERM. MODIFIER	TERM.NO.	TI	TERM. MODIFIER	TERM.NO.	TI	TERM. MODIFIER
356			256			156			056		
355			255			155			055		
354	I	MRST	254			154			054	I	B0
353	G	GRD	253	G	GRD	153	G	GRD	053	G	GRD
352			252			152			052		
351			251			151			051		
350			250			150			050		
349			249			149			049		
348			248			148			048		
347			247			147			047		
346			246			146			046		
345			245			145			045		
344	IØ	JT03	244	IØ	JR03	144	IØ	JT02	044	IØ	JR02
343			243			143			043		
342			242			142			042		
341			241			141			041		
340			240			140			040		
339			239			139			039		
338			238			138			038		
337			237			137			037		
336			236			136			036		
335	G	GRD	235	G	GRD	135	P	+5	035	P	+5
334	G	GRD	234	G	GRD	134	P	+5	034	P	+5
333	I	CLK	233	I	DRIN	133	I	READ	033	I	WRITE
332	G	GRD	232	G	GRD	132			032		
324	G	GRD	224	G	GRD	124			024		
323	Ø	DWOUT	223	Ø	SRVQ	123	I	A3	023	I	A2
322			222	Ø	ASWO	122			022		
321	G	GRD	221	G	GRD	121	G	GRD	021	G	GRD
320			220			120			020		
319			219			119			019		
318			218			118			018		
317			217			117			017		
316			216			116			016		
315			215			115			015		
314			214			114			014		
313			213			113			013		
312			212			112	Ø	+CURPR	012	Ø	-CURPR
311			211			111			011		
310	IØ	SUBTIP	210	IØ	SUBRING	110			010		
309	O	SLCTRL	209	G	-48RTN	109			009		
308			208			108			008		
307	IØ	DEDTIP	207	IØ	DEDRING	107			007		
306			206			106			006		
305			205			105			005		
304			204			104			004		
303	IØ	JT01	203	IØ	JR01	103			003		
302	IØ	JT00	202	IØ	JR00	102			002		
301	G	-48RTN	201	G	-48RTN	101	P	-48	001	P	-48
300	G	-48RTN	200	G	-48RTN	100	P	-48	000	P	-48

INFORMATION NOTES (CONT):

312.(CONT) TERMINAL INDEX TN1636 (21)

TERM.NO.	TI	TERM. MODIFIER	TERM.NO.	TI	TERM. MODIFIER	TERM.NO.	TI	TERM. MODIFIER	TERM.NO.	TI	TERM. MODIFIER
356	EG	EGRD	256	EG	EGRD	156	EG	EGRD	056	EG	EGRD
355			255			155			055		
354			254			154	I	B1	054		
353	G	GRD	253	G	GRD	153	G	GRD	053	G	GRD
352			252			152			052		
351			251			151			051		
350			250			150			050		
349			249			149			049		
348			248			148			048		
347			247			147			047		
346			246			146			046		
345			245			145			045		
344	IØ	JT03	244	IØ	JR03	144	IØ	JT02	044	IØ	JR02
343			243	IØ	DATA15	143			043	Ø	AD007
342	IØ	FTEST	242	IØ	DATA14	142	Ø	FTSTACK	042	Ø	AD006
341			241	IØ	DATD13	141			041	Ø	AD005
340			240	IØ	DATA12	140			040	Ø	AD004
339			239	IØ	DATA11	139			039	Ø	AD003
338			238	IØ	DATA10	138			038	Ø	AD002
337			237	IØ	DATA09	137			037	Ø	AD001
336			236	IØ	DATA08	136			036	Ø	AD000
335	G	GRD	235	G	GRD	135	P	+5	035	P	+5
334	G	GRD	234	G	GRD	134	P	+5	034	P	+5
333	I	CLK	233	I	DRIN	133	I	READ	033	I	WRITE
332	G	GRD	232	G	GRD	132			032		
324	G	GRD	224	G	GRD	124			024		
323	Ø	DWOUT	223	Ø	INT	123			023		
322	Ø	ASW1	222	Ø	ASWO	122	I	A1	022		
321	G	GRD	221	G	GRD	121	G	GRD	021	G	GRD
320			220	IØ	DATA07	120			020		
319			219	IØ	DATA06	119	Ø	ADD14	019		
318			218	IØ	DATA05	118	Ø	ADD13	018		
317			217	IØ	DATA04	117	Ø	ADD12	017		
316			216	IØ	DATA03	116	Ø	ADD11	016		
315			215	IØ	DATA02	115	Ø	ADD10	015	Ø	RDO
314			214	IØ	DATA01	114	Ø	ADD09	014	Ø	HLDA
313			213	IØ	DATA00	113	Ø	ADD08	013	I	PROCHLD
312			212			112	Ø	+CURPR	012	Ø	-CURPR
311			211			111			011		
310			210			110			010		
309			209			109			009		
308			208			108			008		
307			207			107			007		
306			206			106			006		
305			205			105			005		
304			204			104			004		
303	IØ	JT01	203	IØ	JR01	103			003		
302	IØ	JT00	202	IØ	JR00	102			002		
301	P	-48RTN	201	P	-48RTN	101	P	-48	001	P	-48
300	P	-48RTN	200	P	-48RTN	100	P	-48	000	P	-48

Copyright 1988 AT&T
All Rights Reserved

MODULAR METALLIC SERVICE UNIT

DWG SIZE: B5

ISSUE: 7B

AT&T | SD-50015-01 | SHEET: D7

INFORMATION NOTES (CONT):

312. (CONT) TERMINAL INDEX (SEE NOTE 1).

TERM.NO.	TI	TERM. MODIFIER	TERM.NO.	TI	TERM. MODIFIER	TERM.NO.	TI	TERM. MODIFIER	TERM.NO.	TI	TERM. MODIFIER
356	EG	EG	256	EG	EG	156	EG	EG	056	EG	EG
355			255			155			055		
354			254			154			054		
353	G	GRD	253	G	GRD	153	G	GRD	053	I	VPP
352			252			152			052		
351			251			151			051		
350			250			150			050		
349			249			149			049		
348			248			148			048		
347			247			147			047		
346			246			146			046		
345			245			145			045		
344	IØ	JT03	244	IØ	JR03	144	IØ	JT02	044	IØ	JR02
343			243	IØ	DATA15	143			043	Ø	ADD07
342	IØ	FTEST	242	IØ	DATA14	142	Ø	FTSTACK	042	Ø	ADD06
341			241	IØ	DATA13	141			041	Ø	ADD05
340			240	IØ	DATA12	140			040	Ø	ADD04
339			239	IØ	DATA11	139			039	Ø	ADD03
338			238	IØ	DATA10	138			038	Ø	ADD02
337			237	IØ	DATA09	137			037	Ø	ADD01
336			236	IØ	DATA08	136			036	Ø	ADD00
335	G	GRD	235	G	GRD	135	P	+5	035	P	+5
334	G	GRD	234	G	GRD	134	P	+5	034	P	+5
333	I	CLK	233	I	DRIN	133	I	READ	033	I	WRITE
332	G	GRD	232	G	GRD	132			032		
324	G	GRD	224	G	GRD	124			024		
323	Ø	DW0UT	223	Ø	INT	123			023		
322	Ø	ASW1	222	Ø	ASW0	122	I	A1	022		
321	G	GRD	221	G	GRD	121	G	GRD	021	G	GRD
320			220	IØ	DATA07	120			020		
319			219	IØ	DATA06	119	Ø	ADD14	019		
318			218	IØ	DATA05	118	Ø	ADD13	018		
317			217	IØ	DATA04	117	Ø	ADD12	017		
316			216	IØ	DATA03	116	Ø	ADD11	016		
315			215	IØ	DATA02	115	Ø	ADD10	015	Ø	RDO
314			214	IØ	DATA01	114	Ø	ADD09	014	Ø	HLDA
313			213	IØ	DATA00	113	Ø	ADD08	013	I	PR@CHLD
312			212			112	Ø	+CURPR	012	Ø	-CURPR
311			211			111			011		
310			210			110			010		
309			209			109			009		
308			208			108			008		
307			207			107			007		
306			206			106			006		
305			205			105			005		
304			204			104			004		
303	IØ	JT01	203	IØ	JR01	103			003		
302	IØ	JT00	202	IØ	JR00	102			002		
301	P	-48RTN	201	P	-48RTN	101	P	-48	001	P	-48
300	P	-48RTN	200	P	-48RTN	100	P	-48	000	P	-48

313. OPTION (T) PROVIDES WIRE FOR AUTO RESTART.

NOTES:

1. THIS TERMINAL INDEX IS PROVIDED FOR THE FOLLOWING CIRCUIT PACKS:

OPTIONS	CIRCUIT PACKS
(6)	TN328
(7)	TN329
(8)	TN330
(11)	TN1538
(12)	TN1539
(13)	TN1540
(14)	TN1613
(15)	TN1614
(16)	TN1615
(17)	TN3288
(18)	TN329B
(19)	TN330B

Copyright 1992 AT&T
All Rights Reserved

MODULAR METALLIC SERVICE UNIT

DWG SIZE: B3

ISSUE: 8B

AT&T | SD-50015-01 | SHEET: D8

NOTES:

1. THE FOLLOWING SHOWS THE SYMBOLIC EQUIVALENT OF THE TABULAR PRESENTATION.

CAD 002

PERIPHERAL INTERFACE CONTROLLER BUS

TO CONNECTION DESTINATION	LEAD DESIG	METHOD	WIRE SYM	TERMINAL	FROM CONNECTION LEAD DESIG	TERMINATION	TERMINAL	OPT	NOTE
.....J				04-018	JACK/CP	.....			
	NC			049	GRD04018				
TO INTERFACE MODULE PROCESSOR UNIT	OINTR1N		P001	050	OINTR1N				
	OSLCT1N		P002	051	OSLCT1N				
	OCLK1N		P003	052	OCLK1N				
	OMSG1N		P004	053	OMSG1N				
	ORPLY1N		P005	054	ORPLY1N				
	NC			149	GRD04018				
TO INTERFACE MODULE PROCESSOR UNIT	OINTR1P		P001	150	OINTR1P				
	OSLCT1P		P002	151	OSLCT1P				
	OCLK1P		P003	152	OCLK1P				
	OMSG1P		P004	153	OMSG1P				
	ORPLY1P		P005	154	ORPLY1P				

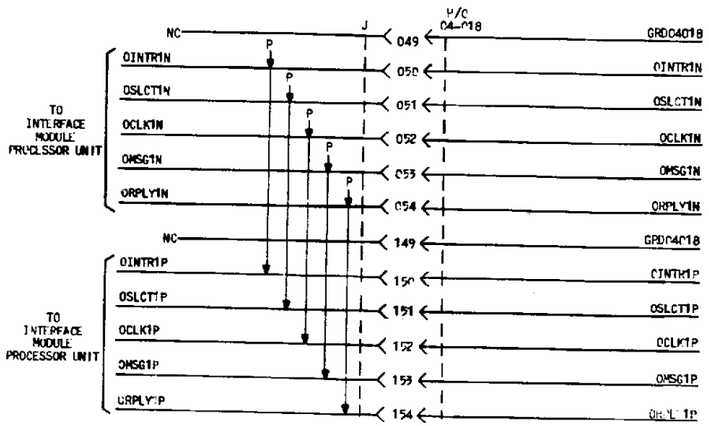

2. THE FOLLOWING SHOWS THE SYMBOLIC EQUIVALENT OF THE TABULAR PRESENTATION.

CAD 003

METALLIC TEST BUS

TO CONNECTION DESTINATION	LEAD DESIG	METHOD	WIRE SYM	TERMINAL	FROM CONNECTION LEAD DESIG	TERMINATION	TERMINAL	OPT	NOTE
.....J				04-030	TF	.....			
TO CONN CKT	NC			000					
	OAR16L00		P025	001	OAR16L00	04-026 CP	204		
	NC			002					

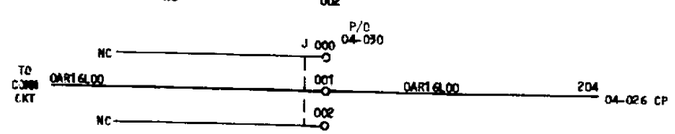

3. THE FOLLOWING SHOWS THE SYMBOLIC EQUIVALENT OF THE TABULAR PRESENTATION.

CAD 006

METALLIC TEST INTERCONNECTION BUSES

TO CONNECTION DESTINATION	LEAD DESIG	METHOD	WIRE SYM	TERMINAL	FROM CONNECTION LEAD DESIG	TERMINATION	TERMINAL	OPT	NOTE
.....J				04-090	JACK/TF	.....			
TO CONN CKT	MTIB00R		P000	213	MTIBC0R	04-090 CP	204		
	MTIB01R		P001	214	MTIBC1R	04-090 CP	205		
	MTIB02R		P002	215	MTIBC2R	04-090 CP	206		
	MTIB03R		P003	216	MTIBC3R	04-090 CP	207		
	MTIB04R		P004	217	MTIBC4R	04-090 CP	208		
	MTIB05R		P005	218	MTIBC5R	04-090 CP	209		
	MTIB06R		P006	219	MTIBC6R	04-090 CP	210		
	MTIB07R		P007	220	MTIBC7R	04-090 CP	211		
	NC			221	GRD04090				
	NC			222	OASW00				
	NC			223					
	NC			224	GRD04090				

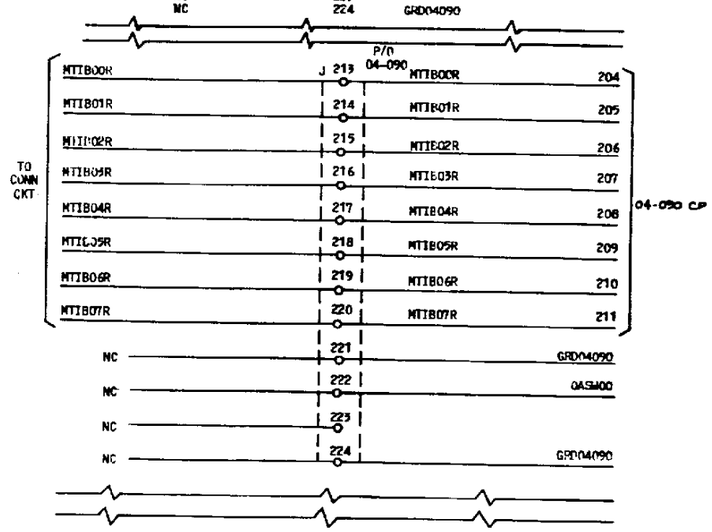

4. THE FOLLOWING SHOWS THE SYMBOLIC EQUIVALENT OF THE TABULAR PRESENTATION.

CAD 007

POWER AND GROUND ACCESS

TO CONNECTION DESTINATION	LEAD DESIG	METHOD	WIRE SYM	TERMINAL	FROM CONNECTION LEAD DESIG	TERMINATION	TERMINAL	OPT	NOTE
.....J				01-013	LUG	.....			
TO FUSE PANEL	-48RTN00		080		-48RTN00	04-010 CP	104		

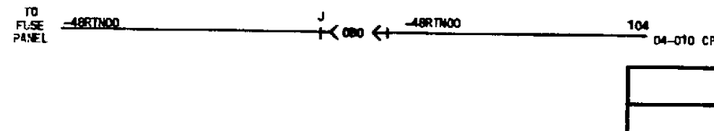

SEE PROPRIETARY NOTICE ON COVER SHEET

MODULAR METALLIC SERVICE UNIT

SIZE: B

ISSUE: 1

AT&T BELL LABORATORIES

SD-5D015-01

SHEET: GBI

CAD 1

UNIT SYMBOL

ELEMENT IDENTIFIER

A

SERVICE GROUP 0

TERM. MODIFIER	FUNC	ACCESS TERM.	FS TERM.	LOC FS/SYM	NOTE
-48RTN00	G	01-013-080	04-010-104	4/1	
-48RTN01	G	01-039-080	04-018-200	1/1	
-48V00	P	01-016-080	04-010-108	4/1	
-48V01	P	01-065-080	04-018-000	1/1	
GRD04010	G	01-018-180	04-010-000	4/1	
GRD04010	G	07-175-057	04-010-000	4/1	
GRD04010	G	07-018-157	04-010-000	4/1	
GRD04010	G	01-175-080	04-010-000	4/1	
GRD04010	G	01-087-080	04-010-000	4/1	
GRD04010	G	07-087-057	04-010-000	4/1	
GRD04018	G	04-022-040	04-018-013	1/1	
GRD04018	G	04-022-021	04-018-013	1/1	
0AR00L00	I	04-026-004	04-026-004	2/1	P/0AT00L00
0AR00L01	I	04-034-004	04-034-004	2/2	P/0AT00L01
0AR00L02	I	04-042-004	04-042-004	2/3	P/0AT00L02
0AR00L03	I	04-050-004	04-050-004	2/4	P/0AT00L03
0AR00L04	I	04-058-004	04-058-004	2/5	P/0AT00L04
0AR00L05	I	04-066-004	04-066-004	2/6	P/0AT00L05
0AR00L06	I	04-074-004	04-074-004	2/7	P/0AT00L06
0AR00L07	I	04-082-004	04-082-004	2/8	P/0AT00L07
0AR01L00	I	04-026-005	04-026-005	2/1	P/0AT01L00
0AR01L01	I	04-034-005	04-034-005	2/2	P/0AT01L01
0AR01L02	I	04-042-005	04-042-005	2/3	P/0AT01L02
0AR01L03	I	04-050-005	04-050-005	2/4	P/0AT01L03
0AR01L04	I	04-058-005	04-058-005	2/5	P/0AT01L04
0AR01L05	I	04-066-005	04-066-005	2/6	P/0AT01L05
0AR01L06	I	04-074-005	04-074-005	2/7	P/0AT01L06
0AR01L07	I	04-082-005	04-082-005	2/8	P/0AT01L07
0AR02L00	I	04-026-006	04-026-006	2/1	P/0AT02L00
0AR02L01	I	04-034-006	04-034-006	2/2	P/0AT02L01
0AR02L02	I	04-042-006	04-042-006	2/3	P/0AT02L02
0AR02L03	I	04-050-006	04-050-006	2/4	P/0AT02L03
0AR02L04	I	04-058-006	04-058-006	2/5	P/0AT02L04
0AR02L05	I	04-066-006	04-066-006	2/6	P/0AT02L05
0AR02L06	I	04-074-006	04-074-006	2/7	P/0AT02L06
0AR02L07	I	04-082-006	04-082-006	2/8	P/0AT02L07
0AR03L00	I	04-026-007	04-026-007	2/1	P/0AT03L00
0AR03L01	I	04-034-007	04-034-007	2/2	P/0AT03L01
0AR03L02	I	04-042-007	04-042-007	2/3	P/0AT03L02
0AR03L03	I	04-050-007	04-050-007	2/4	P/0AT03L03
0AR03L04	I	04-058-007	04-058-007	2/5	P/0AT03L04
0AR03L05	I	04-066-007	04-066-007	2/6	P/0AT03L05
0AR03L06	I	04-074-007	04-074-007	2/7	P/0AT03L06
0AR03L07	I	04-082-007	04-082-007	2/8	P/0AT03L07
0AR04L00	I	04-026-008	04-026-008	2/1	P/0AT04L00
0AR04L01	I	04-034-008	04-034-008	2/2	P/0AT04L01
0AR04L02	I	04-042-008	04-042-008	2/3	P/0AT04L02
0AR04L03	I	04-050-008	04-050-008	2/4	P/0AT04L03
0AR04L04	I	04-058-008	04-058-008	2/5	P/0AT04L04
0AR04L05	I	04-066-008	04-066-008	2/6	P/0AT04L05
0AR04L06	I	04-074-008	04-074-008	2/7	P/0AT04L06
0AR04L07	I	04-082-008	04-082-008	2/8	P/0AT04L07
0AR05L00	I	04-026-009	04-026-009	2/1	P/0AT05L00
0AR05L01	I	04-034-009	04-034-009	2/2	P/0AT05L01
0AR05L02	I	04-042-009	04-042-009	2/3	P/0AT05L02
0AR05L03	I	04-050-009	04-050-009	2/4	P/0AT05L03
0AR05L04	I	04-058-009	04-058-009	2/5	P/0AT05L04
0AR05L05	I	04-066-009	04-066-009	2/6	P/0AT05L05
0AR05L06	I	04-074-009	04-074-009	2/7	P/0AT05L06
0AR05L07	I	04-082-009	04-082-009	2/8	P/0AT05L07
0AR06L00	I	04-026-010	04-026-010	2/1	P/0AT06L00
0AR06L01	I	04-034-010	04-034-010	2/2	P/0AT06L01
0AR06L02	I	04-042-010	04-042-010	2/3	P/0AT06L02
0AR06L03	I	04-050-010	04-050-010	2/4	P/0AT06L03
0AR06L04	I	04-058-010	04-058-010	2/5	P/0AT06L04
0AR06L05	I	04-066-010	04-066-010	2/6	P/0AT06L05

ELEMENT IDENTIFIER (CONT)

A

SERVICE GROUP 0

TERM. MODIFIER	FUNC	ACCESS TERM.	FS TERM.	LOC FS/SYM	NOTE
0AR06L06	I	04-074-010	04-074-010	2/7	P/0AT06L06
0AR06L07	I	04-082-010	04-082-010	2/8	P/0AT06L07
0AR07L00	I	04-026-011	04-026-011	2/1	P/0AT07L00
0AR07L01	I	04-034-011	04-034-011	2/2	P/0AT07L01
0AR07L02	I	04-042-011	04-042-011	2/3	P/0AT07L02
0AR07L03	I	04-050-011	04-050-011	2/4	P/0AT07L03
0AR07L04	I	04-058-011	04-058-011	2/5	P/0AT07L04
0AR07L05	I	04-066-011	04-066-011	2/6	P/0AT07L05
0AR07L06	I	04-074-011	04-074-011	2/7	P/0AT07L06
0AR07L07	I	04-082-011	04-082-011	2/8	P/0AT07L07
0AR08L00	I	04-026-045	04-026-045	2/1	P/0AT08L00
0AR08L01	I	04-034-045	04-034-045	2/2	P/0AT08L01
0AR08L02	I	04-042-045	04-042-045	2/3	P/0AT08L02
0AR08L03	I	04-050-045	04-050-045	2/4	P/0AT08L03
0AR08L04	I	04-058-045	04-058-045	2/5	P/0AT08L04
0AR08L05	I	04-066-045	04-066-045	2/6	P/0AT08L05
0AR08L06	I	04-074-045	04-074-045	2/7	P/0AT08L06
0AR08L07	I	04-082-045	04-082-045	2/8	P/0AT08L07
0AR09L00	I	04-026-046	04-026-046	2/1	P/0AT09L00
0AR09L01	I	04-034-046	04-034-046	2/2	P/0AT09L01
0AR09L02	I	04-042-046	04-042-046	2/3	P/0AT09L02
0AR09L03	I	04-050-046	04-050-046	2/4	P/0AT09L03
0AR09L04	I	04-058-046	04-058-046	2/5	P/0AT09L04
0AR09L05	I	04-066-046	04-066-046	2/6	P/0AT09L05
0AR09L06	I	04-074-046	04-074-046	2/7	P/0AT09L06
0AR09L07	I	04-082-046	04-082-046	2/8	P/0AT09L07
0AR10L00	I	04-026-047	04-026-047	2/1	P/0AT10L00
0AR10L01	I	04-034-047	04-034-047	2/2	P/0AT10L01
0AR10L02	I	04-042-047	04-042-047	2/3	P/0AT10L02
0AR10L03	I	04-050-047	04-050-047	2/4	P/0AT10L03
0AR10L04	I	04-058-047	04-058-047	2/5	P/0AT10L04
0AR10L05	I	04-066-047	04-066-047	2/6	P/0AT10L05
0AR10L06	I	04-074-047	04-074-047	2/7	P/0AT10L06
0AR10L07	I	04-082-047	04-082-047	2/8	P/0AT10L07
0AR11L00	I	04-026-048	04-026-048	2/1	P/0AT11L00
0AR11L01	I	04-034-048	04-034-048	2/2	P/0AT11L01
0AR11L02	I	04-042-048	04-042-048	2/3	P/0AT11L02
0AR11L03	I	04-050-048	04-050-048	2/4	P/0AT11L03
0AR11L04	I	04-058-048	04-058-048	2/5	P/0AT11L04
0AR11L05	I	04-066-048	04-066-048	2/6	P/0AT11L05
0AR11L06	I	04-074-048	04-074-048	2/7	P/0AT11L06
0AR11L07	I	04-082-048	04-082-048	2/8	P/0AT11L07
0AR12L00	I	04-026-049	04-026-049	2/1	P/0AT12L00
0AR12L01	I	04-034-049	04-034-049	2/2	P/0AT12L01
0AR12L02	I	04-042-049	04-042-049	2/3	P/0AT12L02
0AR12L03	I	04-050-049	04-050-049	2/4	P/0AT12L03
0AR12L04	I	04-058-049	04-058-049	2/5	P/0AT12L04
0AR12L05	I	04-066-049	04-066-049	2/6	P/0AT12L05
0AR12L06	I	04-074-049	04-074-049	2/7	P/0AT12L06
0AR12L07	I	04-082-049	04-082-049	2/8	P/0AT12L07
0AR13L00	I	04-026-050	04-026-050	2/1	P/0AT13L00
0AR13L01	I	04-034-050	04-034-050	2/2	P/0AT13L01
0AR13L02	I	04-042-050	04-042-050	2/3	P/0AT13L02
0AR13L03	I	04-050-050	04-050-050	2/4	P/0AT13L03
0AR13L04	I	04-058-050	04-058-050	2/5	P/0AT13L04
0AR13L05	I	04-066-050	04-066-050	2/6	P/0AT13L05
0AR13L06	I	04-074-050	04-074-050	2/7	P/0AT13L06
0AR13L07	I	04-082-050	04-082-050	2/8	P/0AT13L07
0AR14L00	I	04-026-051	04-026-051	2/1	P/0AT14L00
0AR14L01	I	04-034-051	04-034-051	2/2	P/0AT14L01
0AR14L02	I	04-042-051	04-042-051	2/3	P/0AT14L02
0AR14L03	I	04-050-051	04-050-051	2/4	P/0AT14L03
0AR14L04	I	04-058-051	04-058-051	2/5	P/0AT14L04
0AR14L05	I	04-066-051	04-066-051	2/6	P/0AT14L05
0AR14L06	I	04-074-051	04-074-051	2/7	P/0AT14L06
0AR14L07	I	04-082-051	04-082-051	2/8	P/0AT14L07

ELEMENT IDENTIFIER (CONT)

A

SE-RVICE GROUP 0

TERM. MODIFIER	FUNC	ACCESS TERM.	FS TERM.	LOC FS/SYM	NOTE
0AR15L00	I	04-026-052	04-026-052	2/1	P/0AT15L00
0AR15L01	I	04-034-052	04-034-052	2/2	P/0AT15L01
0AR15L02	I	04-042-052	04-042-052	2/3	P/0AT15L02
0AR15L03	I	04-050-052	04-050-052	2/4	P/0AT15L03
0AR15L04	I	04-058-052	04-058-052	2/5	P/0AT15L04
0AR15L05	I	04-066-052	04-066-052	2/6	P/0AT15L05
0AR15L06	I	04-074-052	04-074-052	2/7	P/0AT15L06
0AR15L07	I	04-082-052	04-082-052	2/8	P/0AT15L07
0AR16L00	IO	04-026-204	04-026-204	2/1	P/0AT16L00
0AR16L00	IO	04-030-001	04-026-204	2/1	P/0AT16L00
0AR16L01	IO	04-034-204	04-034-204	2/2	P/0AT16L01
0AR16L01	IO	04-038-001	04-034-204	2/2	P/0AT16L01
0AR16L02	IO	04-046-001	04-042-204	2/3	P/0AT16L02
0AR16L02	IO	04-042-204	04-042-204	2/3	P/0AT16L02
0AR16L03	IO	04-050-204	04-050-204	2/4	P/0AT16L03
0AR16L04	IO	04-058-204	04-058-204	2/5	P/0AT16L04
0AR16L05	IO	04-066-204	04-066-204	2/6	P/0AT16L05
0AR16L06	IO	04-074-204	04-074-204	2/7	P/0AT16L06
0AR16L07	IO	04-082-204	04-082-204	2/8	P/0AT16L07
0AR17L00	IO	04-026-205	04-026-205	2/1	P/0AT17L00
0AR17L00	IO	04-030-004	04-026-205	2/1	P/0AT17L00
0AR17L01	IO	04-038-004	04-034-205	2/2	P/0AT17L01
0AR17L01	IO	04-034-205	04-034-205	2/2	P/0AT17L01
0AR17L02	IO	04-042-205	04-042-205	2/3	P/0AT17L02
0AR17L02	IO	04-046-004	04-042-205	2/3	P/0AT17L02
0AR17L03	IO	04-050-205	04-050-205	2/4	P/0AT17L03
0AR17L04	IO	04-058-205	04-058-205	2/5	P/0AT17L04
0AR17L05	IO	04-066-205	04-066-205	2/6	P/0AT17L05
0AR17L06	IO	04-074-205	04-074-205	2/7	P/0AT17L06
0AR17L07	IO	04-082-205	04-082-205	2/8	P/0AT17L07
0AR18L00	IO	04-026-206	04-026-206	2/1	P/0AT18L00
0AR18L00	IO	04-030-007	04-026-206	2/1	P/0AT18L00
0AR18L01	IO	04-034-206	04-034-206	2/2	P/0AT18L01
0AR18L01	IO	04-038-007	04-034-206	2/2	P/0AT18L01
0AR18L02	IO	04-042-206	04-042-206	2/3	P/0AT18L02
0AR18L02	IO	04-046-007	04-042-206	2/3	P/0AT18L02
0AR18L03	IO	04-050-206	04-050-206	2/4	P/0AT18L03
0AR18L04	IO	04-058-206	04-058-206	2/5	P/0AT18L04
0AR18L05	IO	04-066-206	04-066-206	2/6	P/0AT18L05
0AR18L06	IO	04-074-206	04-074-206	2/7	P/0AT18L06
0AR18L07	IO	04-082-206	04-082-206	2/8	P/0AT18L07
0AR19L00	IO	04-026-207	04-026-207	2/1	P/0AT19L00
0AR19L00	IO	04-030-010	04-026-207	2/1	P/0AT19L00
0AR19L01	IO	04-038-010	04-034-207	2/2	P/0AT19L01
0AR19L01	IO	04-034-207	04-034-207	2/2	P/0AT19L01
0AR19L02	IO	04-046-010	04-042-207	2/3	P/0AT19L02
0AR19L02	IO	04-042-207	04-042-207	2/3	P/0AT19L02
0AR19L03	IO	04-050-207	04-050-207	2/4	P/0AT19L03
0AR19L04	IO	04-058-207	04-058-207	2/5	P/0AT19L04
0AR19L05	IO	04-066-207	04-066-207	2/6	P/0AT19L05
0AR19L06	IO	04-074-207	04-074-207	2/7	P/0AT19L06
0AR19L07	IO	04-082-207	04-082-207	2/8	P/0AT19L07
0AR20L00	IO	04-030-014	04-026-208	2/1	P/0AT20L00
0AR20L00	IO	04-026-208	04-026-208	2/1	P/0AT20L00
0AR20L01	IO	04-034-208	04-034-208	2/2	P/0AT20L01
0AR20L01	IO	04-038-014	04-034-208	2/2	P/0AT20L01
0AR20L02	IO	04-042-208	04-042-208	2/3	P/0AT20L02
0AR20L02	IO	04-046-014	04-042-208	2/3	P/0AT20L02
0AR20L03	IO	04-050-208	04-050-208	2/4	P/0AT20L03
0AR20L04	IO	04-058-208	04-058-208	2/5	P/0AT20L04
0AR20L05	IO	04-066-208	04-066-208	2/6	P/0AT20L05
0AR20L06	IO	04-074-208	04-074-208	2/7	P/0AT20L06
0AR20L07	IO	04-082-208	04-082-208	2/8	P/0AT20L07
0AR21L00	IO	04-026-209	04-026-209	2/1	P/0AT21L00
0AR21L00	IO	04-030-017	04-026-209	2/1	P/0AT21L00
0AR21L01	IO	04-034-209	04-034-209	2/2	P/0AT21L01

ELEMENT IDENTIFIER (CONT)

A

SERVICE GROUP 0

TERM. MODIFIER	FUNC	ACCESS TERM.	FS TERM.	LOC FS/SYM	NOTE
0AR21L01	IO	04-038-017	04-034-209	2/2	P/0AT21L01
0AR21L02	IO	04-046-017	04-042-209	2/3	P/0AT21L02
0AR21L02	IO	04-042-209	04-042-209	2/3	P/0AT21L02
0AR21L03	IO	04-050-209	04-050-209	2/4	P/0AT21L03
0AR21L04	IO	04-058-209	04-058-209	2/5	P/0AT21L04
0AR21L05	IO	04-066-209	04-066-209	2/6	P/0AT21L05
0AR21L06	IO	04-074-209	04-074-209	2/7	P/0AT21L06
0AR21L07	IO	04-082-209	04-082-209	2/8	P/0AT21L07
0AR22L00	IO	04-030-020	04-026-210	2/1	P/0AT22L00
0AR22L00	IO	04-026-210	04-026-210	2/1	P/0AT22L00
0AR22L01	IO	04-034-210	04-034-210	2/2	P/0AT22L01
0AR22L01	IO	04-038-020	04-034-210	2/2	P/0AT22L01
0AR22L02	IO	04-042-210	04-042-210	2/3	P/0AT22L02
0AR22L02	IO	04-046-020	04-042-210	2/3	P/0AT22L02
0AR22L03	IO	04-050-210	04-050-210	2/4	P/0AT22L03
0AR22L04	IO	04-058-210	04-058-210	2/5	P/0AT22L04
0AR22L05	IO	04-066-210	04-066-210	2/6	P/0AT22L05
0AR22L06	IO	04-074-210	04-074-210	2/7	P/0AT22L06
0AR22L07	IO	04-082-210	04-082-210	2/8	P/0AT22L07
0AR23L00	IO	04-026-211	04-026-211	2/1	P/0AT23L00
0AR23L00	IO	04-030-023	04-026-211	2/1	P/0AT23L00
0AR23L01	IO	04-034-211	04-034-211	2/2	P/0AT23L01
0AR23L01	IO	04-038-023	04-034-211	2/2	P/0AT23L01
0AR23L02	IO	04-046-023	04-042-211	2/3	P/0AT23L02
0AR23L02	IO	04-042-211	04-042-211	2/3	P/0AT23L02
0AR23L03	IO	04-050-211	04-050-211	2/4	P/0AT23L03
0AR23L04	IO	04-058-211	04-058-211	2/5	P/0AT23L04
0AR23L05	IO	04-066-211	04-066-211	2/6	P/0AT23L05
0AR23L06	IO	04-074-211	04-074-211	2/7	P/0AT23L06
0AR23L07	IO	04-082-211	04-082-211	2/8	P/0AT23L07
0AR24L00	IO	04-026-245	04-026-245	2/1	P/0AT24L00
0AR24L00	IO	04-030-033	04-026-245	2/1	P/0AT24L00
0AR24L01	IO	04-038-033	04-034-245	2/2	P/0AT24L01
0AR24L01	IO	04-034-245	04-034-245	2/2	P/0AT24L01
0AR24L02	IO	04-042-245	04-042-245	2/3	P/0AT24L02
0AR24L02	IO	04-046-033	04-042-245	2/3	P/0AT24L02
0AR24L03	IO	04-050-245	04-050-245	2/4	P/0AT24L03
0AR24L04	IO	04-058-245	04-058-245	2/5	P/0AT24L04
0AR24L05	IO	04-066-245	04-066-245	2/6	P/0AT24L05
0AR24L06	IO	04-074-245	04-074-245	2/7	P/0AT24L06
0AR24L07	IO	04-082-245	04-082-245	2/8	P/0AT24L07
0AR25L00	IO	04-026-246	04-026-246	2/1	P/0AT25L00
0AR25L00	IO	04-030-036	04-026-246	2/1	P/0AT25L00
0AR25L01	IO	04-038-036	04-034-246	2/2	P/0AT25L01
0AR25L01	IO	04-034-246	04-034-246	2/2	P/0AT25L01
0AR25L02	IO	04-042-246	04-042-246	2/3	P/0AT25L02
0AR25L02	IO	04-046-036	04-042-246	2/3	P/0AT25L02
0AR25L03	IO	04-050-246	04-050-246	2/4	P/0AT25L03
0AR25L04	IO	04-058-246	04-058-246	2/5	P/0AT25L04
0AR25L05	IO	04-066-246	04-066-246	2/6	P/0AT25L05
0AR25L06	IO	04-074-246	04-074-246	2/7	P/0AT25L06
0AR25L07	IO	04-082-246	04-082-246	2/8	P/0AT25L07
0AR26L00	IO	04-026-247	04-026-247	2/1	P/0AT26L00
0AR26L00	IO	04-030-039	04-026-247	2/1	P/0AT26L00
0AR26L01	IO	04-038-039	04-034-247	2/2	P/0AT26L01
0AR26L01	IO	04-034-247	04-034-247	2/2	P/0AT26L01
0AR26L02	IO	04-046-039	04-042-247	2/3	P/0AT26L02

SEE PROPRIETARY NOTICE ON COVER SHEET

MODULAR METALLIC SERVICE UNIT

DWG SIZE: D2

ISSUE: 3A

AT&T BELL LABORATORIES

SD-5D015-01

GB2

PRINTED IN U. S. A.

12/13/84

CAD 1

UNIT SYMBOL

ELEMENT IDENTIFIER (CONT)

A

SERVICE GROUP 0

TERM. MODIFIER	FUNC	ACCESS TERM.	FS TERM.	LOC FS/SYM	NOTE
0AR26L02	IO	04-042-247	04-042-247	2/3	P/0AT26L02
0AR26L03	IO	04-050-247	04-050-247	2/4	P/0AT26L03
0AR26L04	IO	04-058-247	04-058-247	2/5	P/0AT26L04
0AR26L05	IO	04-066-247	04-066-247	2/6	P/0AT26L05
0AR26L06	IO	04-074-247	04-074-247	2/7	P/0AT26L06
0AR26L07	IO	04-082-247	04-082-247	2/8	P/0AT26L07
0AR27L00	IO	04-026-248	04-026-248	2/1	P/0AT27L00
0AR27L00	IO	04-030-042	04-026-248	2/1	P/0AT27L00
0AR27L01	IO	04-038-042	04-034-248	2/2	P/0AT27L01
0AR27L01	IO	04-034-248	04-034-248	2/2	P/0AT27L01
0AR27L02	IO	04-046-042	04-042-248	2/3	P/0AT27L02
0AR27L02	IO	04-042-248	04-042-248	2/3	P/0AT27L02
0AR27L03	IO	04-050-248	04-050-248	2/4	P/0AT27L03
0AR27L04	IO	04-058-248	04-058-248	2/5	P/0AT27L04
0AR27L05	IO	04-066-248	04-066-248	2/6	P/0AT27L05
0AR27L06	IO	04-074-248	04-074-248	2/7	P/0AT27L06
0AR27L07	IO	04-082-248	04-082-248	2/8	P/0AT27L07
0AR28L00	IO	04-030-046	04-026-249	2/1	P/0AT28L00
0AR28L00	IO	04-026-249	04-026-249	2/1	P/0AT28L00
0AR28L01	IO	04-034-249	04-034-249	2/2	P/0AT28L01
0AR28L01	IO	04-038-046	04-034-249	2/2	P/0AT28L01
0AR28L02	IO	04-042-249	04-042-249	2/3	P/0AT28L02
0AR28L02	IO	04-046-046	04-042-249	2/3	P/0AT28L02
0AR28L03	IO	04-050-249	04-050-249	2/4	P/0AT28L03
0AR28L04	IO	04-058-249	04-058-249	2/5	P/0AT28L04
0AR28L05	IO	04-066-249	04-066-249	2/6	P/0AT28L05
0AR28L06	IO	04-074-249	04-074-249	2/7	P/0AT28L06
0AR28L07	IO	04-082-249	04-082-249	2/8	P/0AT28L07
0AR29L00	IO	04-030-049	04-026-250	2/1	P/0AT29L00
0AR29L00	IO	04-026-250	04-026-250	2/1	P/0AT29L00
0AR29L01	IO	04-038-049	04-034-250	2/2	P/0AT29L01
0AR29L01	IO	04-034-250	04-034-250	2/2	P/0AT29L01
0AR29L02	IO	04-046-049	04-042-250	2/3	P/0AT29L02
0AR29L02	IO	04-042-250	04-042-250	2/3	P/0AT29L02
0AR29L03	IO	04-050-250	04-050-250	2/4	P/0AT29L03
0AR29L04	IO	04-058-250	04-058-250	2/5	P/0AT29L04
0AR29L05	IO	04-066-250	04-066-250	2/6	P/0AT29L05
0AR29L06	IO	04-074-250	04-074-250	2/7	P/0AT29L06
0AR29L07	IO	04-082-250	04-082-250	2/8	P/0AT29L07
0AR30L00	IO	04-030-052	04-026-251	2/1	P/0AT30L00
0AR30L00	IO	04-026-251	04-026-251	2/1	P/0AT30L00
0AR30L01	IO	04-034-251	04-034-251	2/2	P/0AT30L01
0AR30L01	IO	04-038-052	04-034-251	2/2	P/0AT30L01
0AR30L02	IO	04-042-251	04-042-251	2/3	P/0AT30L02
0AR30L02	IO	04-046-052	04-042-251	2/3	P/0AT30L02
0AR30L03	IO	04-050-251	04-050-251	2/4	P/0AT30L03
0AR30L04	IO	04-058-251	04-058-251	2/5	P/0AT30L04
0AR30L05	IO	04-066-251	04-066-251	2/6	P/0AT30L05
0AR30L06	IO	04-074-251	04-074-251	2/7	P/0AT30L06
0AR30L07	IO	04-082-251	04-082-251	2/8	P/0AT30L07
0AR31L00	IO	04-026-252	04-026-252	2/1	P/0AT31L00
0AR31L00	IO	04-030-055	04-026-252	2/1	P/0AT31L00
0AR31L01	IO	04-038-055	04-034-252	2/2	P/0AT31L01
0AR31L01	IO	04-034-252	04-034-252	2/2	P/0AT31L01
0AR31L02	IO	04-046-055	04-042-252	2/3	P/0AT31L02
0AR31L02	IO	04-042-252	04-042-252	2/3	P/0AT31L02
0AR31L03	IO	04-050-252	04-050-252	2/4	P/0AT31L03
0AR31L04	IO	04-058-252	04-058-252	2/5	P/0AT31L04
0AR31L05	IO	04-066-252	04-066-252	2/6	P/0AT31L05
0AR31L06	IO	04-074-252	04-074-252	2/7	P/0AT31L06
0AR31L07	IO	04-082-252	04-082-252	2/8	P/0AT31L07
0ASW00	I	04-018-011	04-018-011	1/1	
0ASW01	I	04-018-111	04-018-111	1/1	
0ASW10	I	04-018-211	04-018-211	1/1	
0ASW11	I	04-018-311	04-018-311	1/1	
0ASW20	I	04-022-022	04-018-232	1/1	

ELEMENT IDENTIFIER (CONT)

A

SERVICE GROUP 0

TERM. MODIFIER	FUNC	ACCESS TERM.	FS TERM.	LOC FS/SYM	NOTE
0ASW21	I	04-023-022	04-018-332	1/1	
0ASW30	I	04-022-041	04-018-248	1/1	
0ASW31	I	04-023-041	04-018-348	1/1	
0AT00L00	I	04-026-104	04-026-104	2/1	P/0AR00L00
0AT00L01	I	04-034-104	04-034-104	2/2	P/0AR00L01
0AT00L02	I	04-042-104	04-042-104	2/3	P/0AR00L02
0AT00L03	I	04-050-104	04-050-104	2/4	P/0AR00L03
0AT00L04	I	04-058-104	04-058-104	2/5	P/0AR00L04
0AT00L05	I	04-066-104	04-066-104	2/6	P/0AR00L05
0AT00L06	I	04-074-104	04-074-104	2/7	P/0AR00L06
0AT00L07	I	04-082-104	04-082-104	2/8	P/0AR00L07
0AT01L00	I	04-026-105	04-026-105	2/1	P/0AR01L00
0AT01L01	I	04-034-105	04-034-105	2/2	P/0AR01L01
0AT01L02	I	04-042-105	04-042-105	2/3	P/0AR01L02
0AT01L03	I	04-050-105	04-050-105	2/4	P/0AR01L03
0AT01L04	I	04-058-105	04-058-105	2/5	P/0AR01L04
0AT01L05	I	04-066-105	04-066-105	2/6	P/0AR01L05
0AT01L06	I	04-074-105	04-074-105	2/7	P/0AR01L06
0AT01L07	I	04-082-105	04-082-105	2/8	P/0AR01L07
0AT02L00	I	04-026-106	04-026-106	2/1	P/0AR02L00
JAT02L01	I	04-034-106	04-034-106	2/2	P/0AR02L01
0AT02L02	I	04-042-106	04-042-106	2/3	P/0AR02L02
0AT02L03	I	04-050-106	04-050-106	2/4	P/0AR02L03
0AT02L04	I	04-058-106	04-058-106	2/5	P/0AR02L04
0AT02L05	I	04-066-106	04-066-106	2/6	P/0AR02L05
0AT02L06	I	04-074-106	04-074-106	2/7	P/0AR02L06
0AT02L07	I	04-082-106	04-082-106	2/8	P/0AR02L07
0AT03L00	I	04-026-107	04-026-107	2/1	P/0AR03L00
0AT03L01	I	04-034-107	04-034-107	2/2	P/0AR03L01
0AT03L02	I	04-042-107	04-042-107	2/3	P/0AR03L02
0AT03L03	I	04-050-107	04-050-107	2/4	P/0AR03L03
0AT03L04	I	04-058-107	04-058-107	2/5	P/0AR03L04
0AT03L05	I	04-066-107	04-066-107	2/6	P/0AR03L05
0AT03L06	I	04-074-107	04-074-107	2/7	P/0AR03L06
0AT03L07	I	04-082-107	04-082-107	2/8	P/0AR03L07
0AT04L00	I	04-026-108	04-026-108	2/1	P/0AR04L00
0AT04L01	I	04-034-108	04-034-108	2/2	P/0AR04L01
0AT04L02	I	04-042-108	04-042-108	2/3	P/0AR04L02
0AT04L03	I	04-050-108	04-050-108	2/4	P/0AR04L03
0AT04L04	I	04-058-108	04-058-108	2/5	P/0AR04L04
0AT04L05	I	04-066-108	04-066-108	2/6	P/0AR04L05
0AT04L06	I	04-074-108	04-074-108	2/7	P/0AR04L06
0AT04L07	I	04-082-108	04-082-108	2/8	P/0AR04L07
0AT05L00	I	04-026-109	04-026-109	2/1	P/0AR05L00
0AT05L01	I	04-034-109	04-034-109	2/2	P/0AR05L01
0AT05L02	I	04-042-109	04-042-109	2/3	P/0AR05L02
0AT05L03	I	04-050-109	04-050-109	2/4	P/0AR05L03
0AT05L04	I	04-058-109	04-058-109	2/5	P/0AR05L04
0AT05L05	I	04-066-109	04-066-109	2/6	P/0AR05L05
0AT05L06	I	04-074-109	04-074-109	2/7	P/0AR05L06
0AT05L07	I	04-082-109	04-082-109	2/8	P/0AR05L07
0AT06L00	I	04-026-110	04-026-110	2/1	P/0AR06L00
0AT06L01	I	04-034-110	04-034-110	2/2	P/0AR06L01
0AT06L02	I	04-042-110	04-042-110	2/3	P/0AR06L02
0AT06L03	I	04-050-110	04-050-110	2/4	P/0AR06L03
0AT06L04	I	04-058-110	04-058-110	2/5	P/0AR06L04
0AT06L05	I	04-066-110	04-066-110	2/6	P/0AR06L05
0AT06L06	I	04-074-110	04-074-110	2/7	P/0AR06L06
0AT06L07	I	04-082-110	04-082-110	2/8	P/0AR06L07
0AT07L00	I	04-026-111	04-026-111	2/1	P/0AR07L00
0AT07L01	I	04-034-111	04-034-111	2/2	P/0AR07L01
0AT07L02	I	04-042-111	04-042-111	2/3	P/0AR07L02
0AT07L03	I	04-050-111	04-050-111	2/4	P/0AR07L03
0AT07L04	I	04-058-111	04-058-111	2/5	P/0AR07L04
0AT07L05	I	04-066-111	04-066-111	2/6	P/0AR07L05
0AT07L06	I	04-074-111	04-074-111	2/7	P/0AR07L06

ELEMENT IDENTIFIER (CONT)

A

SERVICE GROUP 0

TERM. MODIFIER	FUNC	ACCESS TERM.	FS TERM.	LOC FS/SYM	NOTE
0AT07L07	I	04-082-111	04-082-111	2/8	P/0AR07L07
0AT08L00	I	04-026-145	04-026-145	2/1	P/0AR08L00
0AT08L01	I	04-034-145	04-034-145	2/2	P/0AR08L01
0AT08L02	I	04-042-145	04-042-145	2/3	P/0AR08L02
0AT08L03	I	04-050-145	04-050-145	2/4	P/0AR08L03
0AT08L04	I	04-058-145	04-058-145	2/5	P/0AR08L04
0AT08L05	I	04-066-145	04-066-145	2/6	P/0AR08L05
0AT08L06	I	04-074-145	04-074-145	2/7	P/0AR08L06
0AT08L07	I	04-082-145	04-082-145	2/8	P/0AR08L07
0AT09L00	I	04-026-146	04-026-146	2/1	P/0AR09L00
0AT09L01	I	04-034-146	04-034-146	2/2	P/0AR09L01
0AT09L02	I	04-042-146	04-042-146	2/3	P/0AR09L02
0AT09L03	I	04-050-146	04-050-146	2/4	P/0AR09L03
0AT09L04	I	04-058-146	04-058-146	2/5	P/0AR09L04
0AT09L05	I	04-066-146	04-066-146	2/6	P/0AR09L05
0AT09L06	I	04-074-146	04-074-146	2/7	P/0AR09L06
0AT09L07	I	04-082-146	04-082-146	2/8	P/0AR09L07
0AT10L00	I	04-026-147	04-026-147	2/1	P/0AR10L00
0AT10L01	I	04-034-147	04-034-147	2/2	P/0AR10L01
0AT10L02	I	04-042-147	04-042-147	2/3	P/0AR10L02
0AT10L03	I	04-050-147	04-050-147	2/4	P/0AR10L03
0AT10L04	I	04-058-147	04-058-147	2/5	P/0AR10L04
0AT10L05	I	04-066-147	04-066-147	2/6	P/0AR10L05
0AT10L06	I	04-074-147	04-074-147	2/7	P/0AR10L06
0AT10L07	I	04-082-147	04-082-147	2/8	P/0AR10L07
0AT11L00	I	04-026-148	04-026-148	2/1	P/0AR11L00
0AT11L01	I	04-034-148	04-034-148	2/2	P/0AR11L01
0AT11L02	I	04-042-148	04-042-148	2/3	P/0AR11L02
0AT11L03	I	04-050-148	04-050-148	2/4	P/0AR11L03
0AT11L04	I	04-058-148	04-058-148	2/5	P/0AR11L04
0AT11L05	I	04-066-148	04-066-148	2/6	P/0AR11L05
0AT11L06	I	04-074-148	04-074-148	2/7	P/0AR11L06
0AT11L07	I	04-082-148	04-082-148	2/8	P/0AR11L07
0AT12L00	I	04-026-149	04-026-149	2/1	P/0AR12L00
0AT12L01	I	04-034-149	04-034-149	2/2	P/0AR12L01
0AT12L02	I	04-042-149	04-042-149	2/3	P/0AR12L02
0AT12L03	I	04-050-149	04-050-149	2/4	P/0AR12L03
0AT12L04	I	04-058-149	04-058-149	2/5	P/0AR12L04
0AT12L05	I	04-066-149	04-066-149	2/6	P/0AR12L05
0AT12L06	I	04-074-149	04-074-149	2/7	P/0AR12L06
0AT12L07	I	04-082-149	04-082-149	2/8	P/0AR12L07
0AT13L00	I	04-026-150	04-026-150	2/1	P/0AR13L00
0AT13L01	I	04-034-150	04-034-150	2/2	P/0AR13L01
0AT13L02	I	04-042-150	04-042-150	2/3	P/0AR13L02
0AT13L03	I	04-050-150	04-050-150	2/4	P/0AR13L03
0AT13L04	I	04-058-150	04-058-150	2/5	P/0AR13L04
0AT13L05	I	04-066-150	04-066-150	2/6	P/0AR13L05
0AT13L06	I	04-074-150	04-074-150	2/7	P/0AR13L06
0AT13L07	I	04-082-150	04-082-150	2/8	P/0AR13L07
0AT14L00	I	04-026-151	04-026-151	2/1	P/0AR14L00
0AT14L01	I	04-034-151	04-034-151	2/2	P/0AR14L01
0AT14L02	I	04-042-151	04-042-151	2/3	P/0AR14L02
0AT14L03	I	04-050-151	04-050-151	2/4	P/0AR14L03
0AT14L04	I	04-058-151	04-058-151	2/5	P/0AR14L04
0AT14L05	I	04-066-151	04-066-151	2/6	P/0AR14L05
0AT14L06	I	04-074-151	04-074-151	2/7	P/0AR14L06
0AT14L07	I	04-082-151	04-082-151	2/8	P/0AR14L07
0AT15L00	I	04-026-152	04-026-152	2/1	P/0AR15L00
0AT15L01	I	04-034-152	04-034-152	2/2	P/0AR15L01
0AT15L02	I	04-042-152	04-042-152	2/3	P/0AR15L02
0AT15L03	I	04-050-152	04-050-152	2/4	P/0AR15L03
0AT15L04	I	04-058-152	04-058-152	2/5	P/0AR15L04
0AT15L05	I	04-066-152	04-066-152	2/6	P/0AR15L05
0AT15L06	I	04-074-152	04-074-152	2/7	P/0AR15L06
0AT15L07	I	04-082-152	04-082-152	2/8	P/0AR15L07
0AT16L00	IO	04-031-001	04-026-304	2/1	P/0AR16L00

ELEMENT IDENTIFIER (CONT)

A

SERVICE GROUP 0

TERM. MODIFIER	FUNC	ACCESS TERM.	FS TERM.	LOC FS/SYM	NOTE
0AT16L00	IO	04-026-304	04-026-304	2/1	P/0AR16L00
0AT16L01	IO	04-034-304	04-034-304	2/2	P/0AR16L01
0AT16L01	IO	04-039-001	04-034-304	2/2	P/0AR16L01
0AT16L02	IO	04-042-304	04-042-304	2/3	P/0AR16L02
0AT16L02	IO	04-047-001	04-042-304	2/3	P/0AR16L02
0AT16L03	IO	04-050-304	04-050-304	2/4	P/0AR16L03
0AT16L04	IO	04-058-304	04-058-304	2/5	P/0AR16L04
0AT16L05	IO	04-066-304	04-066-304	2/6	P/0AR16L05
0AT16L06	IO	04-074-304	04-074-304	2/7	P/0AR16L06
0AT16L07	IO	04-082-304	04-082-304	2/8	P/0AR16L07
0AT17L00	IO	04-031-004	04-026-305	2/1	P/0AR17L00
0AT17L00	IO	04-026-305	04-026-305	2/1	P/0AR17L00
0AT17L01	IO	04-039-004	04-034-305	2/2	P/0AR17L01
0AT17L01	IO	04-034-305	04-034-305	2/2	P/0AR17L01
0AT17L02	IO	04-047-004	04-042-305	2/3	P/0AR17L02
0AT17L02	IO	04-042-305	04-042-305	2/3	P/0AR17L02
0AT17L03	IO	04-050-305	04-050-305	2/4	P/0AR17L03
0AT17L04	IO	04-058-305	04-058-305	2/5	P/0AR17L04
0AT17L05	IO	04-066-305	04-066-305	2/6	P/0AR17L05
0AT17L06	IO	04-074-305	04-074-305	2/7	P/0AR17L06
0AT17L07	IO	04-082-305	04-082-305	2/8	P/0AR17L07
0AT18L00	IO	04-031-007	04-026-306	2/1	P/0AR18L00
0AT18L00	IO	04-026-306	04-026-306	2/1	P/0AR18L00
0AT18L01	IO	04-034-306	04-034-306	2/2	P/0AR18L01
0AT18L01	IO	04-039-007	04-034-306	2/2	P/0AR18L01
0AT18L02	IO	04-042-306	04-042-306	2/3	P/0AR18L02
0AT18L02	IO	04-047-007	04-042-306	2/3	P/0AR18L02
0AT18L03	IO	04-050-306	04-050-306	2/4	P/0AR18L03
0AT18L04	IO	04-058-306	04-058-306	2/5	P/0AR18L04
0AT18L05	IO	04-066-306	04-066-306	2/6	P/0AR18L05
0AT18L06	IO	04-074-306	04-074-306	2/7	P/0AR18L06
0AT18L07	IO	04-082-306	04-082-306	2/8	P/0AR18L07
0AT19L00	IO	04-026-307	04-026-307	2/1	P/0AR19L00
0AT19L00	IO	04-031-010	04-026-307	2/1	P/0AR19L00
0AT19L01	IO	04-039-010	04-034-307	2/2	P/0AR19L01
0AT19L01	IO	04-034-307	04-034-307	2/2	P/0AR19L01
0AT19L02	IO	04-042-307	04-042-307	2/3	P/0AR19L02
0AT19L02	IO	04-047-010	04-042-307	2/3	P/0AR19L02
0AT19L03	IO	04-050-307	04-050-307	2/4	P/0AR19L03
0AT19L04	IO	04-058-307	04-058-307	2/5	P/0AR19L04
0AT19L05	IO	04-066-307	04-066-307	2/6	P/0AR19L05
0AT19L06	IO	04-074-307	04-074-307	2/7	P/0AR19L06
0AT19L07	IO	04-082-307	04-082-307	2/8	P/0AR19L07
0AT20L00	IO	04-031-014	04-026-308	2/1	P/0AR20L00
0AT20L00	IO	04-026-308	04-026-308	2/1	P/0AR20L00
0AT20L01	IO	04-034-308	04-034-308	2/2	P/0AR20L01
0AT20L01	IO	04-039-014	04-034-308	2/2	P/0AR20L01
0AT20L02	IO	04-042-308	04-042-308	2/3	P/0AR20L02
0AT20L02	IO	04-047-014	04-042-308	2/3	P/0AR20L02
0AT20L03	IO	04-050-308	04-050-308	2/4	P/0AR20L03
0AT20L04	IO	04-058-308	04-058-308	2/5	P/0AR20L04
0AT20L05	IO	04-066-308	04-066-308	2/6	P/0AR20L05
0AT20L06	IO	04-074-308	04-074-308	2/7	P/0AR20L06
0AT20L07	IO	04-082-308	04-082-308	2/8	P/0AR20L07
0AT21L00	IO	04-026-309	04-026-309	2/1	P/0AR21L00
0AT21L00	IO	04-031-017	04-026-309	2/1	P/0AR21L00
0AT21L01	IO	04-039-017	04-034-309	2/2	P/0AR21L01

SEE PROPRIETARY NOTICE ON COVER SHEET

MODULAR METALLIC SERVICE UNIT

DWG SIZE: D2

ISSUE: 3A

AT&T BELL LABORATORIES

SD-5D015-01

GB3

PRINTED IN U. S. A.

12/13/84

CAD 1
UNIT SYMBOL

ELEMENT IDENTIFIER (CONT)
A
SERVICE GROUP 0

TERM. MODIFIER	FUNC	ACCESS TERM.	FS TERM.	LOC FS/SYM	NOTE
0AT21L01	IO	04-034-309	04-034-309	2/2	P/0AR21L01
0AT21L02	IO	04-047-017	04-042-309	2/3	P/0AR21L02
0AT21L02	IO	04-042-309	04-042-309	2/3	P/0AR21L02
0AT21L03	IO	04-050-309	04-050-309	2/4	P/0AR21L03
0AT21L04	IO	04-058-309	04-058-309	2/5	P/0AR21L04
0AT21L05	IO	04-066-309	04-066-309	2/6	P/0AR21L05
0AT21L06	IO	04-074-309	04-074-309	2/7	P/0AR21L06
0AT21L07	IO	04-082-309	04-082-309	2/8	P/0AR21L07
0AT22L00	IO	04-031-020	04-026-310	2/1	P/0AR22L00
0AT22L00	IO	04-026-310	04-026-310	2/1	P/0AR22L00
0AT22L01	IO	04-039-020	04-034-310	2/2	P/0AR22L01
0AT22L01	IO	04-034-310	04-034-310	2/2	P/0AR22L01
0AT22L02	IO	04-042-310	04-042-310	2/3	P/0AR22L02
0AT22L02	IO	04-047-020	04-042-310	2/3	P/0AR22L02
0AT22L03	IO	04-050-310	04-050-310	2/4	P/0AR22L03
0AT22L04	IO	04-058-310	04-058-310	2/5	P/0AR22L04
0AT22L05	IO	04-066-310	04-066-310	2/6	P/0AR22L05
0AT22L06	IO	04-074-310	04-074-310	2/7	P/0AR22L06
0AT22L07	IO	04-082-310	04-082-310	2/8	P/0AR22L07
0AT23L00	IO	04-026-311	04-026-311	2/1	P/0AR23L00
0AT23L00	IO	04-031-023	04-026-311	2/1	P/0AR23L00
0AT23L01	IO	04-034-311	04-034-311	2/2	P/0AR23L01
0AT23L01	IO	04-039-023	04-034-311	2/2	P/0AR23L01
0AT23L02	IO	04-042-311	04-042-311	2/3	P/0AR23L02
0AT23L02	IO	04-047-023	04-042-311	2/3	P/0AR23L02
0AT23L03	IO	04-050-311	04-050-311	2/4	P/0AR23L03
0AT23L04	IO	04-058-311	04-058-311	2/5	P/0AR23L04
0AT23L05	IO	04-066-311	04-066-311	2/6	P/0AR23L05
0AT23L06	IO	04-074-311	04-074-311	2/7	P/0AR23L06
0AT23L07	IO	04-082-311	04-082-311	2/8	P/0AR23L07
0AT24L00	IO	04-031-033	04-026-345	2/1	P/0AR24L00
0AT24L00	IO	04-026-345	04-026-345	2/1	P/0AR24L00
0AT24L01	IO	04-034-345	04-034-345	2/2	P/0AR24L01
0AT24L01	IO	04-039-033	04-034-345	2/2	P/0AR24L01
0AT24L02	IO	04-047-033	04-042-345	2/3	P/0AR24L02
0AT24L02	IO	04-042-345	04-042-345	2/3	P/0AR24L02
0AT24L03	IO	04-050-345	04-050-345	2/4	P/0AR24L03
0AT24L04	IO	04-058-345	04-058-345	2/5	P/0AR24L04
0AT24L05	IO	04-066-345	04-066-345	2/6	P/0AR24L05
0AT24L06	IO	04-074-345	04-074-345	2/7	P/0AR24L06
0AT24L07	IO	04-082-345	04-082-345	2/8	P/0AR24L07
0AT25L00	IO	04-031-036	04-026-346	2/1	P/0AR25L00
0AT25L00	IO	04-026-346	04-026-346	2/1	P/0AR25L00
0AT25L01	IO	04-039-036	04-034-346	2/2	P/0AR25L01
0AT25L01	IO	04-034-346	04-034-346	2/2	P/0AR25L01
0AT25L02	IO	04-042-346	04-042-346	2/3	P/0AR25L02
0AT25L02	IO	04-047-036	04-042-346	2/3	P/0AR25L02
0AT25L03	IO	04-050-346	04-050-346	2/4	P/0AR25L03
0AT25L04	IO	04-058-346	04-058-346	2/5	P/0AR25L04
0AT25L05	IO	04-066-346	04-066-346	2/6	P/0AR25L05
0AT25L06	IO	04-074-346	04-074-346	2/7	P/0AR25L06
0AT25L07	IO	04-082-346	04-082-346	2/8	P/0AR25L07
0AT26L00	IO	04-026-347	04-026-347	2/1	P/0AR26L00
0AT26L00	IO	04-031-039	04-026-347	2/1	P/0AR26L00
0AT26L01	IO	04-034-347	04-034-347	2/2	P/0AR26L01
0AT26L01	IO	04-039-039	04-034-347	2/2	P/0AR26L01
0AT26L02	IO	04-042-347	04-042-347	2/3	P/0AR26L02
0AT26L02	IO	04-047-039	04-042-347	2/3	P/0AR26L02
0AT26L03	IO	04-050-347	04-050-347	2/4	P/0AR26L03
0AT26L04	IO	04-058-347	04-058-347	2/5	P/0AR26L04
0AT26L05	IO	04-066-347	04-066-347	2/6	P/0AR26L05
0AT26L06	IO	04-074-347	04-074-347	2/7	P/0AR26L06
0AT26L07	IO	04-082-347	04-082-347	2/8	P/0AR26L07
0AT27L00	IO	04-026-348	04-026-348	2/1	P/0AR27L00
0AT27L00	IO	04-031-042	04-026-348	2/1	P/0AR27L00
0AT27L01	IO	04-039-042	04-034-348	2/2	P/0AR27L01

ELEMENT IDENTIFIER (CONT)
A
SERVICE GROUP 0

TERM. MODIFIER	FUNC	ACCESS TERM.	FS TERM.	LOC FS/SYM	NOTE
0AT27L01	IO	04-034-348	04-034-348	2/2	P/0AR27L01
0AT27L02	IO	04-042-348	04-042-348	2/3	P/0AR27L02
0AT27L02	IO	04-047-042	04-042-348	2/3	P/0AR27L02
0AT27L03	IO	04-050-348	04-050-348	2/4	P/0AR27L03
0AT27L04	IO	04-058-348	04-058-348	2/5	P/0AR27L04
0AT27L05	IO	04-066-348	04-066-348	2/6	P/0AR27L05
0AT27L06	IO	04-074-348	04-074-348	2/7	P/0AR27L06
0AT27L07	IO	04-082-348	04-082-348	2/8	P/0AR27L07
0AT28L00	IO	04-031-046	04-026-349	2/1	P/0AR28L00
0AT28L00	IO	04-026-349	04-026-349	2/1	P/0AR28L00
0AT28L01	IO	04-034-349	04-034-349	2/2	P/0AR28L01
0AT28L01	IO	04-039-046	04-034-349	2/2	P/0AR28L01
0AT28L02	IO	04-047-046	04-042-349	2/3	P/0AR28L02
0AT28L02	IO	04-042-349	04-042-349	2/3	P/0AR28L02
0AT28L03	IO	04-050-349	04-050-349	2/4	P/0AR28L03
0AT28L04	IO	04-058-349	04-058-349	2/5	P/0AR28L04
0AT28L05	IO	04-066-349	04-066-349	2/6	P/0AR28L05
0AT28L06	IO	04-074-349	04-074-349	2/7	P/0AR28L06
0AT28L07	IO	04-082-349	04-082-349	2/8	P/0AR28L07
0AT29L00	IO	04-026-350	04-026-350	2/1	P/0AR29L00
0AT29L00	IO	04-031-049	04-026-350	2/1	P/0AR29L00
0AT29L01	IO	04-039-049	04-034-350	2/2	P/0AR29L01
0AT29L01	IO	04-034-350	04-034-350	2/2	P/0AR29L01
0AT29L02	IO	04-047-049	04-042-350	2/3	P/0AR29L02
0AT29L02	IO	04-042-350	04-042-350	2/3	P/0AR29L02
0AT29L03	IO	04-050-350	04-050-350	2/4	P/0AR29L03
0AT29L04	IO	04-058-350	04-058-350	2/5	P/0AR29L04
0AT29L05	IO	04-066-350	04-066-350	2/6	P/0AR29L05
0AT29L06	IO	04-074-350	04-074-350	2/7	P/0AR29L06
0AT29L07	IO	04-082-350	04-082-350	2/8	P/0AR29L07
0AT30L00	IO	04-031-052	04-026-351	2/1	P/0AR30L00
0AT30L00	IO	04-026-351	04-026-351	2/1	P/0AR30L00
0AT30L01	IO	04-034-351	04-034-351	2/2	P/0AR30L01
0AT30L01	IO	04-039-052	04-034-351	2/2	P/0AR30L01
0AT30L02	IO	04-042-351	04-042-351	2/3	P/0AR30L02
0AT30L02	IO	04-047-052	04-042-351	2/3	P/0AR30L02
0AT30L03	IO	04-050-351	04-050-351	2/4	P/0AR30L03
0AT30L04	IO	04-058-351	04-058-351	2/5	P/0AR30L04
0AT30L05	IO	04-066-351	04-066-351	2/6	P/0AR30L05
0AT30L06	IO	04-074-351	04-074-351	2/7	P/0AR30L06
0AT30L07	IO	04-082-351	04-082-351	2/8	P/0AR30L07
0AT31L00	IO	04-031-055	04-026-352	2/1	P/0AR31L00
0AT31L00	IO	04-026-352	04-026-352	2/1	P/0AR31L00
0AT31L01	IO	04-039-055	04-034-352	2/2	P/0AR31L01
0AT31L01	IO	04-034-352	04-034-352	2/2	P/0AR31L01
0AT31L02	IO	04-042-352	04-042-352	2/3	P/0AR31L02
0AT31L02	IO	04-047-055	04-042-352	2/3	P/0AR31L02
0AT31L03	IO	04-050-352	04-050-352	2/4	P/0AR31L03
0AT31L04	IO	04-058-352	04-058-352	2/5	P/0AR31L04
0AT31L05	IO	04-066-352	04-066-352	2/6	P/0AR31L05
0AT31L06	IO	04-074-352	04-074-352	2/7	P/0AR31L06
0AT31L07	IO	04-082-352	04-082-352	2/8	P/0AR31L07
0A0000	O	04-018-002	04-018-002	1/1	P/0B0000
0A0010	O	04-018-202	04-018-202	1/1	P/0B0010
0A0020	O	04-022-013	04-018-021	1/1	
0A0030	O	04-022-032	04-018-044	1/1	
0A1000	O	04-018-003	04-018-003	1/1	P/0B1000
0A1010	O	04-018-203	04-018-203	1/1	P/0B1010
0A1020	O	04-022-014	04-018-022	1/1	
0A1030	O	04-022-033	04-018-045	1/1	
0A2000	O	04-018-004	04-018-004	1/1	P/0B2000
0A2010	O	04-018-204	04-018-204	1/1	P/0B2010
0A2020	O	04-022-015	04-018-023	1/1	
0A2030	O	04-022-034	04-018-046	1/1	
0A3000	O	04-018-005	04-018-005	1/1	P/0B3000
0A3010	O	04-018-205	04-018-205	1/1	P/0B3010

ELEMENT IDENTIFIER (CONT)
A
SERVICE GROUP 0

TERM. MODIFIER	FUNC	ACCESS TERM.	FS TERM.	LOC FS/SYM	NOTE
0A3020	O	04-022-016	04-018-024	1/1	
0A3030	O	04-022-035	04-018-047	1/1	
0A4000	O	04-018-006	04-018-006	1/1	P/0B4000
0A4010	O	04-018-206	04-018-206	1/1	P/0B4010
0A4020	O	04-022-017	04-018-032	1/1	
0A4030	O	04-022-036	04-018-048	1/1	
0A5000	O	04-018-007	04-018-007	1/1	P/0B5000
0A5010	O	04-018-207	04-018-207	1/1	P/0B5010
0A5020	O	04-022-018	04-018-221	1/1	
0A5030	O	04-022-037	04-018-244	1/1	
0A6000	O	04-018-008	04-018-008	1/1	P/0B6000
0A6010	O	04-018-208	04-018-208	1/1	P/0B6010
0A6020	O	04-022-019	04-018-222	1/1	
0A6030	O	04-022-038	04-018-245	1/1	
0A7000	O	04-018-009	04-018-009	1/1	P/0B7000
0A7010	O	04-018-209	04-018-209	1/1	P/0B7010
0A7020	O	04-022-020	04-018-223	1/1	
0A7030	O	04-022-039	04-018-246	1/1	
0B0000	O	04-018-102	04-018-102	1/1	P/0A0000
0B0010	O	04-018-302	04-018-302	1/1	P/0A0010
0B0020	O	04-023-013	04-018-121	1/1	
0B0030	O	04-023-032	04-018-144	1/1	
0B1000	O	04-018-103	04-018-103	1/1	P/0A1000
0B1010	O	04-018-303	04-018-303	1/1	P/0A1010
0B1020	O	04-023-014	04-018-122	1/1	
0B1030	O	04-023-033	04-018-145	1/1	
0B2000	O	04-018-104	04-018-104	1/1	P/0A2000
0B2010	O	04-018-304	04-018-304	1/1	P/0A2010
0B2020	O	04-023-015	04-018-123	1/1	
0B2030	O	04-023-034	04-018-146	1/1	
0B3000	O	04-018-105	04-018-105	1/1	P/0A3000
0B3010	O	04-018-305	04-018-305	1/1	P/0A3010
0B3020	O	04-023-016	04-018-124	1/1	
0B3030	O	04-023-035	04-018-147	1/1	
0B4000	O	04-018-106	04-018-106	1/1	P/0A4000
0B4010	O	04-018-306	04-018-306	1/1	P/0A4010
0B4020	O	04-023-017	04-018-132	1/1	
0B4030	O	04-023-036	04-018-148	1/1	
0B5000	O	04-018-107	04-018-107	1/1	P/0A5000
0B5010	O	04-018-307	04-018-307	1/1	P/0A5010
0B5020	O	04-023-018	04-018-321	1/1	
0B5030	O	04-023-037	04-018-344	1/1	
0B6000	O	04-018-108	04-018-108	1/1	P/0A6000
0B6010	O	04-018-308	04-018-308	1/1	P/0A6010
0B6020	O	04-023-019	04-018-322	1/1	
0B6030	O	04-023-038	04-018-345	1/1	
0B7000	O	04-018-109	04-018-109	1/1	P/0A7000
0B7010	O	04-018-309	04-018-309	1/1	P/0A7010
0B7020	O	04-023-020	04-018-323	1/1	
0B7030	O	04-023-039	04-018-346	1/1	
0B8000	O	04-018-110	04-018-110	1/1	P/GRD04018
0B8010	O	04-018-310	04-018-310	1/1	P/GRD04018
0B8020	O	04-023-021	04-018-324	1/1	
0B8030	O	04-023-040	04-018-347	1/1	
0CLK01	O	04-018-139	04-018-139	1/1	
0CLK02	O	04-018-316	04-018-316	1/1	
0CLK03	O	04-018-339	04-018-339	1/1	
0CLK0N	I	04-018-252	04-018-252	1/1	P/0CLK0P
0CLK0P	I	04-018-352	04-018-352	1/1	P/0CLK0N
0CLK1N	I	04-018-052	04-018-052	1/1	P/0CLK1P
0CLK1P	I	04-018-152	04-018-152	1/1	P/0CLK1N
0DRIN1	I	04-018-037	04-018-037	1/1	
0DRIN2	I	04-018-214	04-018-214	1/1	
0DRIN3	I	04-018-237	04-018-237	1/1	
0DWOUT1	O	04-018-137	04-018-137	1/1	
0DWOUT2	O	04-018-314	04-018-314	1/1	

ELEMENT IDENTIFIER (CONT)
A
SERVICE GROUP 0

TERM. MODIFIER	FUNC	ACCESS TERM.	FS TERM.	LOC FS/SYM	NOTE
0DWOUT3	O	04-018-337	04-018-337	1/1	
0EARTHG	G	07-065-057	04-026-256	2/1	
0INTRON	O	04-018-250	04-018-250	1/1	P/0INTROP
0INTROP	O	04-018-350	04-018-350	1/1	P/0INTRON
0INTR1N	O	04-018-050	04-018-050	1/1	P/0INTR1P
0INTR1P	O	04-018-150	04-018-150	1/1	P/0INTR1N
0MSGON	I	04-018-253	04-018-253	1/1	P/0MSGOP
0MSGOP	I	04-018-353	04-018-353	1/1	P/0MSGON
0MSG1N	I	04-018-053	04-018-053	1/1	P/0MSG1P
0MSG1P	I	04-018-153	04-018-153	1/1	P/0MSG1N
0READ1	O	04-018-039	04-018-039	1/1	
0READ2	O	04-018-216	04-018-216	1/1	
0READ3	O	04-018-239	04-018-239	1/1	
0RPLYON	O	04-018-254	04-018-254	1/1	P/0RPLYOP
0RPLYOP	O	04-018-354	04-018-354	1/1	P/0RPLYON
0RPLY1N	O	04-018-054	04-018-054	1/1	P/0RPLY1P
0RPLY1P	O	04-018-154	04-018-154	1/1	P/0RPLY1N
0SLCTON	I	04-018-251	04-018-251	1/1	P/0SLCTOP
0SLCTOP	I	04-018-351	04-018-351	1/1	P/0SLCTON
0SLCT1N	I	04-018-051	04-018-051	1/1	P/0SLCT1P
0SLCT1P	I	04-018-151	04-018-151	1/1	P/0SLCT1N
0SRVR000	I	04-018-017	04-018-017	1/1	
0SRVR001	I	04-018-117	04-018-117	1/1	
0SRVR002	I	04-018-018	04-018-018	1/1	
0SRVR003	I	04-018-118	04-018-118	1/1	
0SRVR004	I	04-018-019	04-018-019	1/1	
0SRVR005	I	04-018-119	04-018-119	1/1	
0SRVR006	I	04-018-020	04-018-020	1/1	
0SRVR007	I	04-018-120	04-018-120	1/1	
0SRVR008	I	04-018-040	04-018-040	1/1	
0SRVR009	I	04-018-140	04-018-140	1/1	
0SRVR010	I	04-018-041	04-018-041	1/1	
0SRVR011	I	04-018-141	04-018-141	1/1	
0SRVR012	I	04-018-042	04-018-042	1/1	
0SRVR013	I	04-018-142	04-018-142	1/1	
0SRVR014	I	04-018-043	04-018-043	1/1	
0SRVR015	I	04-018-143	04-018-143	1/1	
0SRVR016	I	04-018-217	04-018-217	1/1	
0SRVR017	I	04-018-317	04-018-317	1/1	
0SRVR018	I	04-018-218	04-018-218	1/1	
0SRVR019	I	04-018-318	04-018-318	1/1	
0SRVR020	I	04-018-219	04-018-219	1/1	
0SRVR021	I	04-018-319	04-018-319	1/1	
0SRVR022	I	04-018-220	04-018-220	1/1	
0SRVR023	I	04-018-320	04-018-320	1/1	
0SRVR024	I	04-018-240	04-018-240	1/1	
0SRVR025	I	04-018-340	04-018-340	1/1	
0SRVR026	I	04-018-241	04-018-241	1/1	
0SRVR027	I	04-018-341	04-018-341	1/1	
0SRVR028	I	04-018-242	04-018-242	1/1	
0SRVR029	I	04-018-342	04-018-342	1/1	
0SRVR030	I	04-018-243	04-018-243	1/1	
0SRVR031	I	04-018-343	04-018-343	1/1	
0WRITE1	O	04-018-038	04-018-038	1/1	
0WRITE2	O	04-018-215	04-018-215	1/1	
0WRITE3	O	04-018-238	04-018-238	1/1	

SEE PROPRIETARY NOTICE ON COVER SHEET

MODULAR METALLIC SERVICE UNIT

DWG SIZE: D
ISSUE: 3A

AT&T BELL LABORATORIES | SD-5D015-01 | GB4

PRINTED IN U. S. A. 12/13/84

CAD 1
UNIT SYMBOL

ELEMENT IDENTIFIER
B
SERVICE GROUP 1

TERM. MODIFIER	FUNC	ACCESS TERM.	FS TERM.	LOC FS/SYM	NOTE
-48RTN10	G	01-101-080	04-098-005	8/1	
-48RTN11	G	01-127-080	04-106-200	5/1	
-48V10	P	01-104-080	04-098-006	8/1	
-48V11	P	01-153-080	04-106-101	5/1	
GRD04106	G	04-110-021	04-106-224	5/1	
GRD04106	G	04-110-040	04-106-224	5/1	
1AR00L00	I	04-114-004	04-114-004	6/1	P/1AT00L00
1AR00L01	I	04-122-004	04-122-004	6/2	P/1AT00L01
1AR00L02	I	04-130-004	04-130-004	6/3	P/1AT00L02
1AR00L03	I	04-138-004	04-138-004	6/4	P/1AT00L03
1AR00L04	I	04-146-004	04-146-004	6/5	P/1AT00L04
1AR00L05	I	04-154-004	04-154-004	6/6	P/1AT00L05
1AR00L06	I	04-162-004	04-162-004	6/7	P/1AT00L06
1AR00L07	I	04-170-004	04-170-004	6/8	P/1AT00L07
1AR01L00	I	04-114-005	04-114-005	6/1	P/1AT01L00
1AR01L01	I	04-122-005	04-122-005	6/2	P/1AT01L01
1AR01L02	I	04-130-005	04-130-005	6/3	P/1AT01L02
1AR01L03	I	04-138-005	04-138-005	6/4	P/1AT01L03
1AR01L04	I	04-146-005	04-146-005	6/5	P/1AT01L04
1AR01L05	I	04-154-005	04-154-005	6/6	P/1AT01L05
1AR01L06	I	04-162-005	04-162-005	6/7	P/1AT01L06
1AR01L07	I	04-170-005	04-170-005	6/8	P/1AT01L07
1AR02L00	I	04-114-006	04-114-006	6/1	P/1AT02L00
1AR02L01	I	04-122-006	04-122-006	6/2	P/1AT02L01
1AR02L02	I	04-130-006	04-130-006	6/3	P/1AT02L02
1AR02L03	I	04-138-006	04-138-006	6/4	P/1AT02L03
1AR02L04	I	04-146-006	04-146-006	6/5	P/1AT02L04
1AR02L05	I	04-154-006	04-154-006	6/6	P/1AT02L05
1AR02L06	I	04-162-006	04-162-006	6/7	P/1AT02L06
1AR02L07	I	04-170-006	04-170-006	6/8	P/1AT02L07
1AR03L00	I	04-114-007	04-114-007	6/1	P/1AT03L00
1AR03L01	I	04-122-007	04-122-007	6/2	P/1AT03L01
1AR03L02	I	04-130-007	04-130-007	6/3	P/1AT03L02
1AR03L03	I	04-138-007	04-138-007	6/4	P/1AT03L03
1AR03L04	I	04-146-007	04-146-007	6/5	P/1AT03L04
1AR03L05	I	04-154-007	04-154-007	6/6	P/1AT03L05
1AR03L06	I	04-162-007	04-162-007	6/7	P/1AT03L06
1AR03L07	I	04-170-007	04-170-007	6/8	P/1AT03L07
1AR04L00	I	04-114-008	04-114-008	6/1	P/1AT04L00
1AR04L01	I	04-122-008	04-122-008	6/2	P/1AT04L01
1AR04L02	I	04-130-008	04-130-008	6/3	P/1AT04L02
1AR04L03	I	04-138-008	04-138-008	6/4	P/1AT04L03
1AR04L04	I	04-146-008	04-146-008	6/5	P/1AT04L04
1AR04L05	I	04-154-008	04-154-008	6/6	P/1AT04L05
1AR04L06	I	04-162-008	04-162-008	6/7	P/1AT04L06
1AR04L07	I	04-170-008	04-170-008	6/8	P/1AT04L07
1AR05L00	I	04-114-009	04-114-009	6/1	P/1AT05L00
1AR05L01	I	04-122-009	04-122-009	6/2	P/1AT05L01
1AR05L02	I	04-130-009	04-130-009	6/3	P/1AT05L02
1AR05L03	I	04-138-009	04-138-009	6/4	P/1AT05L03
1AR05L04	I	04-146-009	04-146-009	6/5	P/1AT05L04
1AR05L05	I	04-154-009	04-154-009	6/6	P/1AT05L05
1AR05L06	I	04-162-009	04-162-009	6/7	P/1AT05L06
1AR05L07	I	04-170-009	04-170-009	6/8	P/1AT05L07
1AR06L00	I	04-114-010	04-114-010	6/1	P/1AT06L00
1AR06L01	I	04-122-010	04-122-010	6/2	P/1AT06L01
1AR06L02	I	04-130-010	04-130-010	6/3	P/1AT06L02
1AR06L03	I	04-138-010	04-138-010	6/4	P/1AT06L03
1AR06L04	I	04-146-010	04-146-010	6/5	P/1AT06L04
1AR06L05	I	04-154-010	04-154-010	6/6	P/1AT06L05
1AR06L06	I	04-162-010	04-162-010	6/7	P/1AT06L06
1AR06L07	I	04-170-010	04-170-010	6/8	P/1AT06L07
1AR07L00	I	04-114-011	04-114-011	6/1	P/1AT07L00
1AR07L01	I	04-122-011	04-122-011	6/2	P/1AT07L01
1AR07L02	I	04-130-011	04-130-011	6/3	P/1AT07L02
1AR07L03	I	04-138-011	04-138-011	6/4	P/1AT07L03

ELEMENT IDENTIFIER (CONT)
B
SERVICE GROUP 1

TERM. MODIFIER	FUNC	ACCESS TERM.	FS TERM.	LOC FS/SYM	NOTE
1AR07L04	I	04-146-011	04-146-011	6/5	P/1AT07L04
1AR07L05	I	04-154-011	04-154-011	6/6	P/1AT07L05
1AR07L06	I	04-162-011	04-162-011	6/7	P/1AT07L06
1AR07L07	I	04-170-011	04-170-011	6/8	P/1AT07L07
1AR08L00	I	04-114-045	04-114-045	6/1	P/1AT08L00
1AR08L01	I	04-122-045	04-122-045	6/2	P/1AT08L01
1AR08L02	I	04-130-045	04-130-045	6/3	P/1AT08L02
1AR08L03	I	04-138-045	04-138-045	6/4	P/1AT08L03
1AR08L04	I	04-146-045	04-146-045	6/5	P/1AT08L04
1AR08L05	I	04-154-045	04-154-045	6/6	P/1AT08L05
1AR08L06	I	04-162-045	04-162-045	6/7	P/1AT08L06
1AR08L07	I	04-170-045	04-170-045	6/8	P/1AT08L07
1AR09L00	I	04-114-046	04-114-046	6/1	P/1AT09L00
1AR09L01	I	04-122-046	04-122-046	6/2	P/1AT09L01
1AR09L02	I	04-130-046	04-130-046	6/3	P/1AT09L02
1AR09L03	I	04-138-046	04-138-046	6/4	P/1AT09L03
1AR09L04	I	04-146-046	04-146-046	6/5	P/1AT09L04
1AR09L05	I	04-154-046	04-154-046	6/6	P/1AT09L05
1AR09L06	I	04-162-046	04-162-046	6/7	P/1AT09L06
1AR09L07	I	04-170-046	04-170-046	6/8	P/1AT09L07
1AR10L00	I	04-114-047	04-114-047	6/1	P/1AT10L00
1AR10L01	I	04-122-047	04-122-047	6/2	P/1AT10L01
1AR10L02	I	04-130-047	04-130-047	6/3	P/1AT10L02
1AR10L03	I	04-138-047	04-138-047	6/4	P/1AT10L03
1AR10L04	I	04-146-047	04-146-047	6/5	P/1AT10L04
1AR10L05	I	04-154-047	04-154-047	6/6	P/1AT10L05
1AR10L06	I	04-162-047	04-162-047	6/7	P/1AT10L06
1AR10L07	I	04-170-047	04-170-047	6/8	P/1AT10L07
1AR11L00	I	04-114-048	04-114-048	6/1	P/1AT11L00
1AR11L01	I	04-122-048	04-122-048	6/2	P/1AT11L01
1AR11L02	I	04-130-048	04-130-048	6/3	P/1AT11L02
1AR11L03	I	04-138-048	04-138-048	6/4	P/1AT11L03
1AR11L04	I	04-146-048	04-146-048	6/5	P/1AT11L04
1AR11L05	I	04-154-048	04-154-048	6/6	P/1AT11L05
1AR11L06	I	04-162-048	04-162-048	6/7	P/1AT11L06
1AR11L07	I	04-170-048	04-170-048	6/8	P/1AT11L07
1AR12L00	I	04-114-049	04-114-049	6/1	P/1AT12L00
1AR12L01	I	04-122-049	04-122-049	6/2	P/1AT12L01
1AR12L02	I	04-130-049	04-130-049	6/3	P/1AT12L02
1AR12L03	I	04-138-049	04-138-049	6/4	P/1AT12L03
1AR12L04	I	04-146-049	04-146-049	6/5	P/1AT12L04
1AR12L05	I	04-154-049	04-154-049	6/6	P/1AT12L05
1AR12L06	I	04-162-049	04-162-049	6/7	P/1AT12L06
1AR12L07	I	04-170-049	04-170-049	6/8	P/1AT12L07
1AR13L00	I	04-114-050	04-114-050	6/1	P/1AT13L00
1AR13L01	I	04-122-050	04-122-050	6/2	P/1AT13L01
1AR13L02	I	04-130-050	04-130-050	6/3	P/1AT13L02
1AR13L03	I	04-138-050	04-138-050	6/4	P/1AT13L03
1AR13L04	I	04-146-050	04-146-050	6/5	P/1AT13L04
1AR13L05	I	04-154-050	04-154-050	6/6	P/1AT13L05
1AR13L06	I	04-162-050	04-162-050	6/7	P/1AT13L06
1AR13L07	I	04-170-050	04-170-050	6/8	P/1AT13L07
1AR14L00	I	04-114-051	04-114-051	6/1	P/1AT14L00
1AR14L01	I	04-122-051	04-122-051	6/2	P/1AT14L01
1AR14L02	I	04-130-051	04-130-051	6/3	P/1AT14L02
1AR14L03	I	04-138-051	04-138-051	6/4	P/1AT14L03
1AR14L04	I	04-146-051	04-146-051	6/5	P/1AT14L04
1AR14L05	I	04-154-051	04-154-051	6/6	P/1AT14L05
1AR14L06	I	04-162-051	04-162-051	6/7	P/1AT14L06
1AR14L07	I	04-170-051	04-170-051	6/8	P/1AT14L07
1AR15L00	I	04-114-052	04-114-052	6/1	P/1AT15L00
1AR15L01	I	04-122-052	04-122-052	6/2	P/1AT15L01
1AR15L02	I	04-130-052	04-130-052	6/3	P/1AT15L02
1AR15L03	I	04-138-052	04-138-052	6/4	P/1AT15L03
1AR15L04	I	04-146-052	04-146-052	6/5	P/1AT15L04
1AR15L05	I	04-154-052	04-154-052	6/6	P/1AT15L05

ELEMENT IDENTIFIER (CONT)
B
SERVICE GROUP 1

TERM. MODIFIER	FUNC	ACCESS TERM.	FS TERM.	LOC FS/SYM	NOTE
1AR15L06	I	04-162-052	04-162-052	6/7	P/1AT15L06
1AR15L07	I	04-170-052	04-170-052	6/8	P/1AT15L07
1AR16L00	IO	04-114-204	04-114-204	6/1	P/1AT16L00
1AR16L00	IO	04-118-001	04-114-204	6/1	P/1AT16L00
1AR16L01	IO	04-126-001	04-122-204	6/2	P/1AT16L01
1AR16L01	IO	04-122-204	04-122-204	6/2	P/1AT16L01
1AR16L02	IO	04-134-001	04-130-204	6/3	P/1AT16L02
1AR16L02	IO	04-130-204	04-130-204	6/3	P/1AT16L02
1AR16L03	IO	04-138-204	04-138-204	6/4	P/1AT16L03
1AR16L04	IO	04-146-204	04-146-204	6/5	P/1AT16L04
1AR16L05	IO	04-154-204	04-154-204	6/6	P/1AT16L05
1AR16L06	IO	04-162-204	04-162-204	6/7	P/1AT16L06
1AR16L07	IO	04-170-204	04-170-204	6/8	P/1AT16L07
1AR17L00	IO	04-114-205	04-114-205	6/1	P/1AT17L00
1AR17L00	IO	04-118-004	04-114-205	6/1	P/1AT17L00
1AR17L01	IO	04-126-004	04-122-205	6/2	P/1AT17L01
1AR17L01	IO	04-122-205	04-122-205	6/2	P/1AT17L01
1AR17L02	IO	04-130-205	04-130-205	6/3	P/1AT17L02
1AR17L02	IO	04-134-004	04-130-205	6/3	P/1AT17L02
1AR17L03	IO	04-138-205	04-138-205	6/4	P/1AT17L03
1AR17L04	IO	04-146-205	04-146-205	6/5	P/1AT17L04
1AR17L05	IO	04-154-205	04-154-205	6/6	P/1AT17L05
1AR17L06	IO	04-162-205	04-162-205	6/7	P/1AT17L06
1AR17L07	IO	04-170-205	04-170-205	6/8	P/1AT17L07
1AR18L00	IO	04-114-206	04-114-206	6/1	P/1AT18L00
1AR18L00	IO	04-118-007	04-114-206	6/1	P/1AT18L00
1AR18L01	IO	04-122-206	04-122-206	6/2	P/1AT18L01
1AR18L01	IO	04-126-007	04-122-206	6/2	P/1AT18L01
1AR18L02	IO	04-130-206	04-130-206	6/3	P/1AT18L02
1AR18L02	IO	04-134-007	04-130-206	6/3	P/1AT18L02
1AR18L03	IO	04-138-206	04-138-206	6/4	P/1AT18L03
1AR18L04	IO	04-146-206	04-146-206	6/5	P/1AT18L04
1AR18L05	IO	04-154-206	04-154-206	6/6	P/1AT18L05
1AR18L06	IO	04-162-206	04-162-206	6/7	P/1AT18L06
1AR18L07	IO	04-170-206	04-170-206	6/8	P/1AT18L07
1AR19L00	IO	04-114-207	04-114-207	6/1	P/1AT19L00
1AR19L00	IO	04-118-010	04-114-207	6/1	P/1AT19L00
1AR19L01	IO	04-126-010	04-122-207	6/2	P/1AT19L01
1AR19L01	IO	04-122-207	04-122-207	6/2	P/1AT19L01
1AR19L02	IO	04-130-207	04-130-207	6/3	P/1AT19L02
1AR19L02	IO	04-134-010	04-130-207	6/3	P/1AT19L02
1AR19L03	IO	04-138-207	04-138-207	6/4	P/1AT19L03
1AR19L04	IO	04-146-207	04-146-207	6/5	P/1AT19L04
1AR19L05	IO	04-154-207	04-154-207	6/6	P/1AT19L05
1AR19L06	IO	04-162-207	04-162-207	6/7	P/1AT19L06
1AR19L07	IO	04-170-207	04-170-207	6/8	P/1AT19L07
1AR20L00	IO	04-114-208	04-114-208	6/1	P/1AT20L00
1AR20L00	IO	04-118-014	04-114-208	6/1	P/1AT20L00
1AR20L01	IO	04-126-014	04-122-208	6/2	P/1AT20L01
1AR20L01	IO	04-122-208	04-122-208	6/2	P/1AT20L01
1AR20L02	IO	04-130-208	04-130-208	6/3	P/1AT20L02
1AR20L02	IO	04-134-014	04-130-208	6/3	P/1AT20L02
1AR20L03	IO	04-138-208	04-138-208	6/4	P/1AT20L03
1AR20L04	IO	04-146-208	04-146-208	6/5	P/1AT20L04
1AR20L05	IO	04-154-208	04-154-208	6/6	P/1AT20L05
1AR20L06	IO	04-162-208	04-162-208	6/7	P/1AT20L06
1AR20L07	IO	04-170-208	04-170-208	6/8	P/1AT20L07
1AR21L00	IO	04-114-209	04-114-209	6/1	P/1AT21L00
1AR21L00	IO	04-118-017	04-114-209	6/1	P/1AT21L00
1AR21L01	IO	04-126-017	04-122-209	6/2	P/1AT21L01
1AR21L01	IO	04-122-209	04-122-209	6/2	P/1AT21L01
1AR21L02	IO	04-130-209	04-130-209	6/3	P/1AT21L02
1AR21L02	IO	04-134-017	04-130-209	6/3	P/1AT21L02
1AR21L03	IO	04-138-209	04-138-209	6/4	P/1AT21L03
1AR21L04	IO	04-146-209	04-146-209	6/5	P/1AT21L04
1AR21L05	IO	04-154-209	04-154-209	6/6	P/1AT21L05

ELEMENT IDENTIFIER (CONT)
B
SERVICE GROUP 1

TERM. MODIFIER	FUNC	ACCESS TERM.	FS TERM.	LOC FS/SYM	NOTE
1AR21L06	IO	04-162-209	04-162-209	6/7	P/1AT21L06
1AR21L07	IO	04-170-209	04-170-209	6/8	P/1AT21L07
1AR22L00	IO	04-114-210	04-114-210	6/1	P/1AT22L00
1AR22L00	IO	04-118-020	04-114-210	6/1	P/1AT22L00
1AR22L01	IO	04-122-210	04-122-210	6/2	P/1AT22L01
1AR22L01	IO	04-126-020	04-122-210	6/2	P/1AT22L01
1AR22L02	IO	04-130-210	04-130-210	6/3	P/1AT22L02
1AR22L02	IO	04-134-020	04-130-210	6/3	P/1AT22L02
1AR22L03	IO	04-138-210	04-138-210	6/4	P/1AT22L03
1AR22L04	IO	04-146-210	04-146-210	6/5	P/1AT22L04
1AR22L05	IO	04-154-210	04-154-210	6/6	P/1AT22L05
1AR22L06	IO	04-162-210	04-162-210	6/7	P/1AT22L06
1AR22L07	IO	04-170-210	04-170-210	6/8	P/1AT22L07
1AR23L00	IO	04-118-023	04-114-211	6/1	P/1AT23L00
1AR23L00	IO	04-114-211	04-114-211	6/1	P/1AT23L00
1AR23L01	IO	04-126-023	04-122-211	6/2	P/1AT23L01
1AR23L01	IO	04-122-211	04-122-211	6/2	P/1AT23L01
1AR23L02	IO	04-130-211	04-130-211	6/3	P/1AT23L02
1AR23L02	IO	04-134-023	04-130-211	6/3	P/1AT23L02
1AR23L03	IO	04-138-211	04-138-211	6/4	P/1AT23L03
1AR23L04	IO	04-146-211	04-146-211	6/5	P/1AT23L04
1AR23L05	IO	04-154-211	04-154-211	6/6	P/1AT23L05
1AR23L06	IO	04-162-211	04-162-211	6/7	P/1AT23L06
1AR23L07	IO	04-170-211	04-170-211	6/8	P/1AT23L07
1AR24L00	IO	04-114-245	04-114-245	6/1	P/1AT24L00
1AR24L00	IO	04-118-033	04-114-245	6/1	P/1AT24L00
1AR24L01	IO	04-126-033	04-122-245	6/2	P/1AT24L01
1AR24L01	IO	04-122-245	04-122-245	6/2	P/1AT24L01
1AR24L02	IO	04-134-033	04-130-245	6/3	P/1AT24L02
1AR24L02	IO	04-130-245	04-130-245	6/3	P/1AT24L02
1AR24L03	IO	04-138-245	04-138-245	6/4	P/1AT24L03
1AR24L04	IO	04-146-245	04-146-245	6/5	P/1AT24L04
1AR24L05	IO	04-154-245	04-154-245	6/6	P/1AT24L05
1AR24L06	IO	04-162-245	04-162-245	6/7	P/1AT24L06
1AR24L07	IO	04-170-245	04-170-245	6/8	P/1AT24L07
1AR25L00	IO	04-118-036	04-114-246	6/1	P/1AT25L00
1AR25L00	IO	04-114-246	04-114-246	6/1	P/1AT25L00
1AR25L01	IO	04-126-036	04-122-246	6/2	P/1AT25L01
1AR25L01	IO	04-122-246	04-122-246	6/2	P/1AT25L01
1AR25L02	IO	04-134-036	04-130-246	6/3	P/1AT25L02
1AR25L02	IO	04-130-246	04-130-246	6/3	P/1AT25L02
1AR25L03	IO	04-138-246	04-138-246	6/4	P/1AT25L03
1AR25L04	IO	04-146-246	04-146-246	6/5	P/1AT25L04
1AR25L05	IO	04-154-246	04-154-246	6/6	P/1AT25L05
1AR25L06	IO	04-162-246	04-162-246	6/7	P/1AT25L06
1AR25L07	IO	04-170-246	04-170-246	6/8	P/1AT25L07
1AR26L00	IO	04-114-247	04-114-247	6/1	P/1AT26L00
1AR26L00	IO	04-118-039	04-114-247	6/1	P/1AT26L00
1AR26L01	IO	04-122-247	04-122-247	6/2	P/1AT26L01
1AR26L01	IO	04-126-039	04-122-247	6/2	P/1AT26L01
1AR26L02	IO	04-130-247	04-130-247	6/3	P/1AT26L02
1AR26L02	IO	04-134-039	04-130-247	6/3	P/1AT26L02
1AR26L03	IO	04-138-247	04-138-247	6/4	P/1AT26L03
1AR26L04	IO	04-146-247	04-146-247	6/5	P/1AT26L04
1AR26L05	IO	04-154-247	04-154-247	6/6	P/1AT26L05
1AR26L06	IO	04-162-247	04-162-247	6/7	P/1AT26L06
1AR26L07	IO	04-170-247	04-170-247	6/8	P/1AT26L07

SEE PROPRIETARY NOTICE ON COVER SHEET

MODULAR METALLIC SERVICE UNIT

DWG SIZE: D
ISSUE: 3A

AT&T BELL LABORATORIES

SD-5D015-01

GB5

PRINTED IN U. S. A.

12/13/84

CAD 1
UNIT SYMBOL

ELEMENT IDENTIFIER (CONT)
B
SERVICE GROUP 1

TERM. MODIFIER	FUNC	ACCESS TERM.	FS TERM.	LOC FS/SYM	NOTE
1AR27L00	IO	04-118-042	04-114-248	6/1	P/1AT27L00
1AR27L00	IO	04-114-248	04-114-248	6/1	P/1AT27L00
1AR27L01	IO	04-126-042	04-122-248	6/2	P/1AT27L01
1AR27L01	IO	04-122-248	04-122-248	6/2	P/1AT27L01
1AR27L02	IO	04-134-042	04-130-248	6/3	P/1AT27L02
1AR27L02	IO	04-130-248	04-130-248	6/3	P/1AT27L02
1AR27L03	IO	04-138-248	04-138-248	6/4	P/1AT27L03
1AR27L04	IO	04-146-248	04-146-248	6/5	P/1AT27L04
1AR27L05	IO	04-154-248	04-154-248	6/6	P/1AT27L05
1AR27L06	IO	04-162-248	04-162-248	6/7	P/1AT27L06
1AR27L07	IO	04-170-248	04-170-248	6/8	P/1AT27L07
1AR28L00	IO	04-114-249	04-114-249	6/1	P/1AT28L00
1AR28L00	IO	04-118-046	04-114-249	6/1	P/1AT28L00
1AR28L01	IO	04-122-249	04-122-249	6/2	P/1AT28L01
1AR28L01	IO	04-126-046	04-122-249	6/2	P/1AT28L01
1AR28L02	IO	04-130-249	04-130-249	6/3	P/1AT28L02
1AR28L02	IO	04-134-046	04-130-249	6/3	P/1AT28L02
1AR28L03	IO	04-138-249	04-138-249	6/4	P/1AT28L03
1AR28L04	IO	04-146-249	04-146-249	6/5	P/1AT28L04
1AR28L05	IO	04-154-249	04-154-249	6/6	P/1AT28L05
1AR28L06	IO	04-162-249	04-162-249	6/7	P/1AT28L06
1AR28L07	IO	04-170-249	04-170-249	6/8	P/1AT28L07
1AR29L00	IO	04-118-049	04-114-250	6/1	P/1AT29L00
1AR29L00	IO	04-114-250	04-114-250	6/1	P/1AT29L00
1AR29L01	IO	04-126-049	04-122-250	6/2	P/1AT29L01
1AR29L01	IO	04-122-250	04-122-250	6/2	P/1AT29L01
1AR29L02	IO	04-134-049	04-130-250	6/3	P/1AT29L02
1AR29L02	IO	04-130-250	04-130-250	6/3	P/1AT29L02
1AR29L03	IO	04-138-250	04-138-250	6/4	P/1AT29L03
1AR29L04	IO	04-146-250	04-146-250	6/5	P/1AT29L04
1AR29L05	IO	04-154-250	04-154-250	6/6	P/1AT29L05
1AR29L06	IO	04-162-250	04-162-250	6/7	P/1AT29L06
1AR29L07	IO	04-170-250	04-170-250	6/8	P/1AT29L07
1AR30L00	IO	04-114-251	04-114-251	6/1	P/1AT30L00
1AR30L00	IO	04-118-052	04-114-251	6/1	P/1AT30L00
1AR30L01	IO	04-122-251	04-122-251	6/2	P/1AT30L01
1AR30L01	IO	04-126-052	04-122-251	6/2	P/1AT30L01
1AR30L02	IO	04-130-251	04-130-251	6/3	P/1AT30L02
1AR30L02	IO	04-134-052	04-130-251	6/3	P/1AT30L02
1AR30L03	IO	04-138-251	04-138-251	6/4	P/1AT30L03
1AR30L04	IO	04-146-251	04-146-251	6/5	P/1AT30L04
1AR30L05	IO	04-154-251	04-154-251	6/6	P/1AT30L05
1AR30L06	IO	04-162-251	04-162-251	6/7	P/1AT30L06
1AR30L07	IO	04-170-251	04-170-251	6/8	P/1AT30L07
1AR31L00	IO	04-118-055	04-114-252	6/1	P/1AT31L00
1AR31L00	IO	04-114-252	04-114-252	6/1	P/1AT31L00
1AR31L01	IO	04-126-055	04-122-252	6/2	P/1AT31L01
1AR31L01	IO	04-122-252	04-122-252	6/2	P/1AT31L01
1AR31L02	IO	04-134-055	04-130-252	6/3	P/1AT31L02
1AR31L02	IO	04-130-252	04-130-252	6/3	P/1AT31L02
1AR31L03	IO	04-138-252	04-138-252	6/4	P/1AT31L03
1AR31L04	IO	04-146-252	04-146-252	6/5	P/1AT31L04
1AR31L05	IO	04-154-252	04-154-252	6/6	P/1AT31L05
1AR31L06	IO	04-162-252	04-162-252	6/7	P/1AT31L06
1AR31L07	IO	04-170-252	04-170-252	6/8	P/1AT31L07
1ASW00	I	04-106-011	04-106-011	5/1	
1ASW01	I	04-106-111	04-106-111	5/1	
1ASW10	I	04-106-211	04-106-211	5/1	
1ASW11	I	04-106-311	04-106-311	5/1	
1ASW20	I	04-110-022	04-106-232	5/1	
1ASW21	I	04-111-022	04-106-332	5/1	
1ASW30	I	04-110-041	04-106-248	5/1	
1ASW31	I	04-111-041	04-106-348	5/1	
1AT00L00	I	04-114-104	04-114-104	6/1	P/1AR00L00
1AT00L01	I	04-122-104	04-122-104	6/2	P/1AR00L01
1AT00L02	I	04-130-104	04-130-104	6/3	P/1AR00L02

ELEMENT IDENTIFIER (CONT)
B
SERVICE GROUP 1

TERM. MODIFIER	FUNC	ACCESS TERM.	FS TERM.	LOC FS/SYM	NOTE
1AT00L03	I	04-138-104	04-138-104	6/4	P/1AR00L03
1AT00L04	I	04-146-104	04-146-104	6/5	P/1AR00L04
1AT00L05	I	04-154-104	04-154-104	6/6	P/1AR00L05
1AT00L06	I	04-162-104	04-162-104	6/7	P/1AP00L06
1AT00L07	I	04-170-104	04-170-104	6/8	P/1AR00L07
1AT01L00	I	04-114-105	04-114-105	6/1	P/1AR01L00
1AT01L01	I	04-122-105	04-122-105	6/2	P/1AR01L01
1AT01L02	I	04-130-105	04-130-105	6/3	P/1AR01L02
1AT01L03	I	04-138-105	04-138-105	6/4	P/1AR01L03
1AT01L04	I	04-146-105	04-146-105	6/5	P/1AR01L04
1AT01L05	I	04-154-105	04-154-105	6/6	P/1AR01L05
1AT01L06	I	04-162-105	04-162-105	6/7	P/1AR01L06
1AT01L07	I	04-170-105	04-170-105	6/8	P/1AR01L07
1AT02L00	I	04-114-106	04-114-106	6/1	P/1AR02L00
1AT02L01	I	04-122-106	04-122-106	6/2	P/1AR02L01
1AT02L02	I	04-130-106	04-130-106	6/3	P/1AR02L02
1AT02L03	I	04-138-106	04-138-106	6/4	P/1AR02L03
1AT02L04	I	04-146-106	04-146-106	6/5	P/1AR02L04
1AT02L05	I	04-154-106	04-154-106	6/6	P/1AR02L05
1AT02L06	I	04-162-106	04-162-106	6/7	P/1AR02L06
1AT02L07	I	04-170-106	04-170-106	6/8	P/1AR02L07
1AT03L00	I	04-114-107	04-114-107	6/1	P/1AR03L00
1AT03L01	I	04-122-107	04-122-107	6/2	P/1AR03L01
1AT03L02	I	04-130-107	04-130-107	6/3	P/1AR03L02
1AT03L03	I	04-138-107	04-138-107	6/4	P/1AR03L03
1AT03L04	I	04-146-107	04-146-107	6/5	P/1AR03L04
1AT03L05	I	04-154-107	04-154-107	6/6	P/1AR03L05
1AT03L06	I	04-162-107	04-162-107	6/7	P/1AR03L06
1AT03L07	I	04-170-107	04-170-107	6/8	P/1AR03L07
1AT04L00	I	04-114-108	04-114-108	6/1	P/1AR04L00
1AT04L01	I	04-122-108	04-122-108	6/2	P/1AR04L01
1AT04L02	I	04-130-108	04-130-108	6/3	P/1AR04L02
1AT04L03	I	04-138-108	04-138-108	6/4	P/1AR04L03
1AT04L04	I	04-146-108	04-146-108	6/5	P/1AR04L04
1AT04L05	I	04-154-108	04-154-108	6/6	P/1AR04L05
1AT04L06	I	04-162-108	04-162-108	6/7	P/1AR04L06
1AT04L07	I	04-170-108	04-170-108	6/8	P/1AR04L07
1AT05L00	I	04-114-109	04-114-109	6/1	P/1AR05L00
1AT05L01	I	04-122-109	04-122-109	6/2	P/1AR05L01
1AT05L02	I	04-130-109	04-130-109	6/3	P/1AR05L02
1AT05L03	I	04-138-109	04-138-109	6/4	P/1AR05L03
1AT05L04	I	04-146-109	04-146-109	6/5	P/1AR05L04
1AT05L05	I	04-154-109	04-154-109	6/6	P/1AR05L05
1AT05L06	I	04-162-109	04-162-109	6/7	P/1AR05L06
1AT05L07	I	04-170-109	04-170-109	6/8	P/1AR05L07
1AT06L00	I	04-114-110	04-114-110	6/1	P/1AR06L00
1AT06L01	I	04-122-110	04-122-110	6/2	P/1AR06L01
1AT06L02	I	04-130-110	04-130-110	6/3	P/1AR06L02
1AT06L03	I	04-138-110	04-138-110	6/4	P/1AR06L03
1AT06L04	I	04-146-110	04-146-110	6/5	P/1AR06L04
1AT06L05	I	04-154-110	04-154-110	6/6	P/1AR06L05
1AT06L06	I	04-162-110	04-162-110	6/7	P/1AR06L06
1AT06L07	I	04-170-110	04-170-110	6/8	P/1AR06L07
1AT07L00	I	04-114-111	04-114-111	6/1	P/1AR07L00
1AT07L01	I	04-122-111	04-122-111	6/2	P/1AR07L01
1AT07L02	I	04-130-111	04-130-111	6/3	P/1AR07L02
1AT07L03	I	04-138-111	04-138-111	6/4	P/1AR07L03
1AT07L04	I	04-146-111	04-146-111	6/5	P/1AR07L04
1AT07L05	I	04-154-111	04-154-111	6/6	P/1AR07L05
1AT07L06	I	04-162-111	04-162-111	6/7	P/1AR07L06
1AT07L07	I	04-170-111	04-170-111	6/8	P/1AR07L07
1AT08L00	I	04-114-145	04-114-145	6/1	P/1AR08L00
1AT08L01	I	04-122-145	04-122-145	6/2	P/1AR08L01
1AT08L02	I	04-130-145	04-130-145	6/3	P/1AR08L02
1AT08L03	I	04-138-145	04-138-145	6/4	P/1AR08L03
1AT08L04	I	04-146-145	04-146-145	6/5	P/1AR08L04

ELEMENT IDENTIFIER (CONT)
B
SERVICE GROUP 1

TERM. MODIFIER	FUNC	ACCESS TERM.	FS TERM.	LOC FS/SYM	NOTE
1AT08L05	I	04-154-145	04-154-145	6/6	P/1AR08L05
1AT08L06	I	04-162-145	04-162-145	6/7	P/1AR08L06
1AT08L07	I	04-170-145	04-170-145	6/8	P/1AR08L07
1AT09L00	I	04-114-146	04-114-146	6/1	P/1AR09L00
1AT09L01	I	04-122-146	04-122-146	6/2	P/1AR09L01
1AT09L02	I	04-130-146	04-130-146	6/3	P/1AR09L02
1AT09L03	I	04-138-146	04-138-146	6/4	P/1AR09L03
1AT09L04	I	04-146-146	04-146-146	6/5	P/1AR09L04
1AT09L05	I	04-154-146	04-154-146	6/6	P/1AR09L05
1AT09L06	I	04-162-146	04-162-146	6/7	P/1AR09L06
1AT09L07	I	04-170-146	04-170-146	6/8	P/1AR09L07
1AT10L00	I	04-114-147	04-114-147	6/1	P/1AR10L00
1AT10L01	I	04-122-147	04-122-147	6/2	P/1AR10L01
1AT10L02	I	04-130-147	04-130-147	6/3	P/1AR10L02
1AT10L03	I	04-138-147	04-138-147	6/4	P/1AR10L03
1AT10L04	I	04-146-147	04-146-147	6/5	P/1AR10L04
1AT10L05	I	04-154-147	04-154-147	6/6	P/1AR10L05
1AT10L06	I	04-162-147	04-162-147	6/7	P/1AR10L06
1AT10L07	I	04-170-147	04-170-147	6/8	P/1AR10L07
1AT11L00	I	04-114-148	04-114-148	6/1	P/1AR11L00
1AT11L01	I	04-122-148	04-122-148	6/2	P/1AR11L01
1AT11L02	I	04-130-148	04-130-148	6/3	P/1AR11L02
1AT11L03	I	04-138-148	04-138-148	6/4	P/1AR11L03
1AT11L04	I	04-146-148	04-146-148	6/5	P/1AR11L04
1AT11L05	I	04-154-148	04-154-148	6/6	P/1AR11L05
1AT11L06	I	04-162-148	04-162-148	6/7	P/1AR11L06
1AT11L07	I	04-170-148	04-170-148	6/8	P/1AR11L07
1AT12L00	I	04-114-149	04-114-149	6/1	P/1AR12L00
1AT12L01	I	04-122-149	04-122-149	6/2	P/1AR12L01
1AT12L02	I	04-130-149	04-130-149	6/3	P/1AR12L02
1AT12L03	I	04-138-149	04-138-149	6/4	P/1AR12L03
1AT12L04	I	04-146-149	04-146-149	6/5	P/1AR12L04
1AT12L05	I	04-154-149	04-154-149	6/6	P/1AR12L05
1AT12L06	I	04-162-149	04-162-149	6/7	P/1AR12L06
1AT12L07	I	04-170-149	04-170-149	6/8	P/1AR12L07
1AT13L00	I	04-114-150	04-114-150	6/1	P/1AR13L00
1AT13L01	I	04-122-150	04-122-150	6/2	P/1AR13L01
1AT13L02	I	04-130-150	04-130-150	6/3	P/1AR13L02
1AT13L03	I	04-138-150	04-138-150	6/4	P/1AR13L03
1AT13L04	I	04-146-150	04-146-150	6/5	P/1AR13L04
1AT13L05	I	04-154-150	04-154-150	6/6	P/1AR13L05
1AT13L06	I	04-162-150	04-162-150	6/7	P/1AR13L06
1AT13L07	I	04-170-150	04-170-150	6/8	P/1AR13L07
1AT14L00	I	04-114-151	04-114-151	6/1	P/1AR14L00
1AT14L01	I	04-122-151	04-122-151	6/2	P/1AR14L01
1AT14L02	I	04-130-151	04-130-151	6/3	P/1AR14L02
1AT14L03	I	04-138-151	04-138-151	6/4	P/1AR14L03
1AT14L04	I	04-146-151	04-146-151	6/5	P/1AR14L04
1AT14L05	I	04-154-151	04-154-151	6/6	P/1AR14L05
1AT14L06	I	04-162-151	04-162-151	6/7	P/1AR14L06
1AT14L07	I	04-170-151	04-170-151	6/8	P/1AR14L07
1AT15L00	I	04-114-152	04-114-152	6/1	P/1AR15L00
1AT15L01	I	04-122-152	04-122-152	6/2	P/1AR15L01
1AT15L02	I	04-130-152	04-130-152	6/3	P/1AR15L02
1AT15L03	I	04-138-152	04-138-152	6/4	P/1AR15L03
1AT15L04	I	04-146-152	04-146-152	6/5	P/1AR15L04
1AT15L05	I	04-154-152	04-154-152	6/6	P/1AR15L05
1AT15L06	I	04-162-152	04-162-152	6/7	P/1AR15L06
1AT15L07	I	04-170-152	04-170-152	6/8	P/1AR15L07
1AT16L00	IO	04-114-304	04-114-304	6/1	P/1AR16L00
1AT16L00	IO	04-119-001	04-114-304	6/1	P/1AR16L00
1AT16L01	IO	04-122-304	04-122-304	6/2	P/1AR16L01
1AT16L01	IO	04-127-001	04-122-304	6/2	P/1AR16L01
1AT16L02	IO	04-130-304	04-130-304	6/3	P/1AR16L02
1AT16L02	IO	04-135-001	04-130-304	6/3	P/1AR16L02
1AT16L03	IO	04-138-304	04-138-304	6/4	P/1AR16L03

ELEMENT IDENTIFIER (CONT)
B
SERVICE GROUP 1

TERM. MODIFIER	FUNC	ACCESS TERM.	FS TERM.	LOC FS/SYM	NOTE
1AT16L04	IO	04-146-304	04-146-304	6/5	P/1AR16L04
1AT16L05	IO	04-154-304	04-154-304	6/6	P/1AR16L05
1AT16L06	IO	04-162-304	04-162-304	6/7	P/1AR16L06
1AT16L07	IO	04-170-304	04-170-304	6/8	P/1AR16L07
1AT17L00	IO	04-119-004	04-114-305	6/1	P/1AR17L00
1AT17L00	IO	04-114-305	04-114-305	6/1	P/1AR17L00
1AT17L01	IO	04-127-004	04-122-305	6/2	P/1AR17L01
1AT17L01	IO	04-122-305	04-122-305	6/2	P/1AR17L01
1AT17L02	IO	04-135-004	04-130-305	6/3	P/1AR17L02
1AT17L02	IO	04-130-305	04-130-305	6/3	P/1AR17L02
1AT17L03	IO	04-138-305	04-138-305	6/4	P/1AR17L03
1AT17L04	IO	04-146-305	04-146-305	6/5	P/1AR17L04
1AT17L05	IO	04-154-305	04-154-305	6/6	P/1AR17L05
1AT17L06	IO	04-162-305	04-162-305	6/7	P/1AR17L06
1AT17L07	IO	04-170-305	04-170-305	6/8	P/1AR17L07
1AT18L00	IO	04-114-306	04-114-306	6/1	P/1AR18L00
1AT18L00	IO	04-119-007	04-114-306	6/1	P/1AR18L00
1AT18L01	IO	04-122-306	04-122-306	6/2	P/1AR18L01
1AT18L01	IO	04-127-007	04-122-306	6/2	P/1AR18L01
1AT18L02	IO	04-130-306	04-130-306	6/3	P/1AR18L02
1AT18L02	IO	04-135-007	04-130-306	6/3	P/1AR18L02
1AT18L03	IO	04-138-306	04-138-306	6/4	P/1AR18L03
1AT18L04	IO	04-146-306	04-146-306	6/5	P/1AR18L04
1AT18L05	IO	04-154-306	04-154-306	6/6	P/1AR18L05
1AT18L06	IO	04-162-306	04-162-306	6/7	P/1AR18L06
1AT18L07	IO	04-170-306	04-170-306	6/8	P/1AR18L07
1AT19L00	IO	04-119-010	04-114-307	6/1	P/1AR19L00
1AT19L00	IO	04-114-307	04-114-307	6/1	P/1AR19L00
1AT19L01	IO	04-127-010	04-122-307	6/2	P/1AR19L01
1AT19L01	IO	04-122-307	04-122-307	6/2	P/1AR19L01
1AT19L02	IO	04-135-010	04-130-307	6/3	P/1AR19L02
1AT19L02	IO	04-130-307	04-130-307	6/3	P/1AR19L02
1AT19L03	IO	04-138-307	04-138-307	6/4	P/1AR19L03
1AT19L04	IO	04-146-307	04-146-307	6/5	P/1AR19L04
1AT19L05	IO	04-154-307	04-154-307	6/6	P/1AR19L05
1AT19L06	IO	04-162-307	04-162-307	6/7	P/1AR19L06
1AT19L07	IO	04-170-307	04-170-307	6/8	P/1AR19L07
1AT20L00	IO	04-114-308	04-114-308	6/1	P/1AR20L00
1AT20L00	IO	04-119-014	04-114-308	6/1	P/1AR20L00
1AT20L01	IO	04-122-308	04-122-308	6/2	P/1AR20L01
1AT20L01	IO	04-127-014	04-122-308	6/2	P/1AR20L01
1AT20L02	IO	04-130-308	04-130-308	6/3	P/1AR20L02
1AT20L02	IO	04-135-014	04-130-308	6/3	P/1AR20L02
1AT20L03	IO	04-138-308	04-138-308	6/4	P/1AR20L03
1AT20L04	IO	04-146-308	04-146-308	6/5	P/1AR20L04
1AT20L05	IO	04-154-308	04-154-308	6/6	P/1AR20L05
1AT20L06	IO	04-162-308	04-162-308	6/7	P/1AR20L06
1AT20L07	IO	04-170-308	04-170-308	6/8	P/1AR20L07
1AT21L00	IO	04-119-017	04-114-309	6/1	P/1AR21L00
1AT21L00	IO	04-114-309	04-114-309	6/1	P/1AR21L00
1AT21L01	IO	04-127-017	04-122-309	6/2	P/1AR21L01
1AT21L01	IO	04-122-309	04-122-309	6/2	P/1AR21L01
1AT21L02	IO	04-135-017	04-130-309	6/3	P/1AR21L02
1AT21L02	IO	04-130-309	04-130-309	6/3	P/1AR21L02
1AT21L03	IO	04-138-309	04-138-309	6/4	P/1AR21L03
1AT21L04	IO	04-146-309	04-146-309	6/5	P/1AR21L04
1AT21L05	IO	04-154-309	04-154-309	6/6	P/1AR21L05

SEE PROPRIETARY NOTICE ON COVER SHEET

MODULAR METALLIC SERVICE UNIT

DWG SIZE: C
ISSUE: 3A

AT&T BELL LABORATORIES | SD-5D015-01 | GB6

PRINTED IN U. S. A. 12/13/84

CAD 1

UNIT SYMBOL

ELEMENT IDENTIFIER (CONT)

B

SERVICE GROUP 1

TERM. MODIFIER	FUNC	ACCESS TERM.	FS TERM.	LOC FS/SYM	NOTE
1AT21L06	IO	04-162-309	04-162-309	6/7	P/1AR21L06
1AT21L07	IO	04-170-309	04-170-309	6/8	P/1AR21L07
1AT22L00	IO	04-114-310	04-114-310	6/1	P/1AR22L00
1AT22L00	IO	04-119-020	04-114-310	6/1	P/1AR22L00
1AT22L01	IO	04-122-310	04-122-310	6/2	P/1AR22L01
1AT22L01	IO	04-127-020	04-122-310	6/2	P/1AR22L01
1AT22L02	IO	04-130-310	04-130-310	6/3	P/1AR22L02
1AT22L02	IO	04-135-020	04-130-310	6/3	P/1AR22L02
1AT22L03	IO	04-138-310	04-138-310	6/4	P/1AR22L03
1AT22L04	IO	04-146-310	04-146-310	6/5	P/1AR22L04
1AT22L05	IO	04-154-310	04-154-310	6/6	P/1AR22L05
1AT22L06	IO	04-162-310	04-162-310	6/7	P/1AR22L06
1AT22L07	IO	04-170-310	04-170-310	6/8	P/1AR22L07
1AT23L00	IO	04-119-023	04-114-311	6/1	P/1AR23L00
1AT23L00	IO	04-114-311	04-114-311	6/1	P/1AR23L00
1AT23L01	IO	04-127-023	04-122-311	6/2	P/1AR23L01
1AT23L01	IO	04-122-311	04-122-311	6/2	P/1AR23L01
1AT23L02	IO	04-135-023	04-130-311	6/3	P/1AR23L02
1AT23L02	IO	04-130-311	04-130-311	6/3	P/1AR23L02
1AT23L03	IO	04-138-311	04-138-311	6/4	P/1AR23L03
1AT23L04	IO	04-146-311	04-146-311	6/5	P/1AR23L04
1AT23L05	IO	04-154-311	04-154-311	6/6	P/1AR23L05
1AT23L06	IO	04-162-311	04-162-311	6/7	P/1AR23L06
1AT23L07	IO	04-170-311	04-170-311	6/8	P/1AR23L07
1AT24L00	IO	04-114-345	04-114-345	6/1	P/1AR24L00
1AT24L00	IO	04-119-033	04-114-345	6/1	P/1AR24L00
1AT24L01	IO	04-122-345	04-122-345	6/2	P/1AR24L01
1AT24L01	IO	04-127-033	04-122-345	6/2	P/1AR24L01
1AT24L02	IO	04-130-345	04-130-345	6/3	P/1AR24L02
1AT24L02	IO	04-135-033	04-130-345	6/3	P/1AR24L02
1AT24L03	IO	04-138-345	04-138-345	6/4	P/1AR24L03
1AT24L04	IO	04-146-345	04-146-345	6/5	P/1AR24L04
1AT24L05	IO	04-154-345	04-154-345	6/6	P/1AR24L05
1AT24L06	IO	04-162-345	04-162-345	6/7	P/1AR24L06
1AT24L07	IO	04-170-345	04-170-345	6/8	P/1AR24L07
1AT25L00	IO	04-119-036	04-114-346	6/1	P/1AR25L00
1AT25L00	IO	04-114-346	04-114-346	6/1	P/1AR25L00
1AT25L01	IO	04-127-036	04-122-346	6/2	P/1AR25L01
1AT25L01	IO	04-122-346	04-122-346	6/2	P/1AR25L01
1AT25L02	IO	04-135-036	04-130-346	6/3	P/1AR25L02
1AT25L02	IO	04-130-346	04-130-346	6/3	P/1AR25L02
1AT25L03	IO	04-138-346	04-138-346	6/4	P/1AR25L03
1AT25L04	IO	04-146-346	04-146-346	6/5	P/1AR25L04
1AT25L05	IO	04-154-346	04-154-346	6/6	P/1AR25L05
1AT25L06	IO	04-162-346	04-162-346	6/7	P/1AR25L06
1AT25L07	IO	04-170-346	04-170-346	6/8	P/1AR25L07
1AT26L00	IO	04-114-347	04-114-347	6/1	P/1AR26L00
1AT26L00	IO	04-119-039	04-114-347	6/1	P/1AR26L00
1AT26L01	IO	04-122-347	04-122-347	6/2	P/1AR26L01
1AT26L01	IO	04-127-039	04-122-347	6/2	P/1AR26L01
1AT26L02	IO	04-130-347	04-130-347	6/3	P/1AR26L02
1AT26L02	IO	04-135-039	04-130-347	6/3	P/1AR26L02
1AT26L03	IO	04-138-347	04-138-347	6/4	P/1AR26L03
1AT26L04	IO	04-146-347	04-146-347	6/5	P/1AR26L04
1AT26L05	IO	04-154-347	04-154-347	6/6	P/1AR26L05
1AT26L06	IO	04-162-347	04-162-347	6/7	P/1AR26L06
1AT26L07	IO	04-170-347	04-170-347	6/8	P/1AR26L07
1AT27L00	IO	04-119-042	04-114-348	6/1	P/1AR27L00
1AT27L00	IO	04-114-348	04-114-348	6/1	P/1AR27L00
1AT27L01	IO	04-127-042	04-122-348	6/2	P/1AR27L01
1AT27L01	IO	04-122-348	04-122-348	6/2	P/1AR27L01
1AT27L02	IO	04-135-042	04-130-348	6/3	P/1AR27L02
1AT27L02	IO	04-130-348	04-130-348	6/3	P/1AR27L02
1AT27L03	IO	04-138-348	04-138-348	6/4	P/1AR27L03
1AT27L04	IO	04-146-348	04-146-348	6/5	P/1AR27L04
1AT27L05	IO	04-154-348	04-154-348	6/6	P/1AR27L05

ELEMENT IDENTIFIER (CONT)

B

SERVICE GROUP 1

TERM. MODIFIER	FUNC	ACCESS TERM.	FS TERM.	LOC FS/SYM	NOTE
1AT27L06	IO	04-162-348	04-162-348	6/7	P/1AR27L06
1AT27L07	IO	04-170-348	04-170-348	6/8	P/1AR27L07
1AT28L00	IO	04-114-349	04-114-349	6/1	P/1AR28L00
1AT28L00	IO	04-119-046	04-114-349	6/1	P/1AR28L00
1AT28L01	IO	04-122-349	04-122-349	6/2	P/1AR28L01
1AT28L01	IO	04-127-046	04-122-349	6/2	P/1AR28L01
1AT28L02	IO	04-130-349	04-130-349	6/3	P/1AR28L02
1AT28L02	IO	04-135-046	04-130-349	6/3	P/1AR28L02
1AT28L03	IO	04-138-349	04-138-349	6/4	P/1AR28L03
1AT28L04	IO	04-146-349	04-146-349	6/5	P/1AR28L04
1AT28L05	IO	04-154-349	04-154-349	6/6	P/1AR28L05
1AT28L06	IO	04-162-349	04-162-349	6/7	P/1AR28L06
1AT28L07	IO	04-170-349	04-170-349	6/8	P/1AR28L07
1AT29L00	IO	04-119-049	04-114-350	6/1	P/1AR29L00
1AT29L00	IO	04-114-350	04-114-350	6/1	P/1AR29L00
1AT29L01	IO	04-127-049	04-122-350	6/2	P/1AR29L01
1AT29L01	IO	04-122-350	04-122-350	6/2	P/1AR29L01
1AT29L02	IO	04-135-049	04-130-350	6/3	P/1AR29L02
1AT29L02	IO	04-130-350	04-130-350	6/3	P/1AR29L02
1AT29L03	IO	04-138-350	04-138-350	6/4	P/1AR29L03
1AT29L04	IO	04-146-350	04-146-350	6/5	P/1AR29L04
1AT29L05	IO	04-154-350	04-154-350	6/6	P/1AR29L05
1AT29L06	IO	04-162-350	04-162-350	6/7	P/1AR29L06
1AT29L07	IO	04-170-350	04-170-350	6/8	P/1AR29L07
1AT30L00	IO	04-114-351	04-114-351	6/1	P/1AR30L00
1AT30L00	IO	04-119-052	04-114-351	6/1	P/1AR30L00
1AT30L01	IO	04-122-351	04-122-351	6/2	P/1AR30L01
1AT30L01	IO	04-127-052	04-122-351	6/2	P/1AR30L01
1AT30L02	IO	04-130-351	04-130-351	6/3	P/1AR30L02
1AT30L02	IO	04-135-052	04-130-351	6/3	P/1AR30L02
1AT30L03	IO	04-138-351	04-138-351	6/4	P/1AR30L03
1AT30L04	IO	04-146-351	04-146-351	6/5	P/1AR30L04
1AT30L05	IO	04-154-351	04-154-351	6/6	P/1AR30L05
1AT30L06	IO	04-162-351	04-162-351	6/7	P/1AR30L06
1AT30L07	IO	04-170-351	04-170-351	6/8	P/1AR30L07
1AT31L00	IO	04-119-055	04-114-352	6/1	P/1AR31L00
1AT31L00	IO	04-114-352	04-114-352	6/1	P/1AR31L00
1AT31L01	IO	04-127-055	04-122-352	6/2	P/1AR31L01
1AT31L01	IO	04-122-352	04-122-352	6/2	P/1AR31L01
1AT31L02	IO	04-135-055	04-130-352	6/3	P/1AR31L02
1AT31L02	IO	04-130-352	04-130-352	6/3	P/1AR31L02
1AT31L03	IO	04-138-352	04-138-352	6/4	P/1AR31L03
1AT31L04	IO	04-146-352	04-146-352	6/5	P/1AR31L04
1AT31L05	IO	04-154-352	04-154-352	6/6	P/1AR31L05
1AT31L06	IO	04-162-352	04-162-352	6/7	P/1AR31L06
1AT31L07	IO	04-170-352	04-170-352	6/8	P/1AR31L07
1A0000	O	04-106-002	04-106-002	5/1	
1A0010	O	04-106-202	04-106-202	5/1	
1A0020	O	04-110-013	04-106-021	5/1	
1A0030	O	04-110-032	04-106-044	5/1	
1A1000	O	04-106-003	04-106-003	5/1	
1A1010	O	04-106-203	04-106-203	5/1	
1A1020	O	04-110-014	04-106-022	5/1	
1A1030	O	04-110-033	04-106-045	5/1	
1A2000	O	04-106-004	04-106-004	5/1	
1A2010	O	04-106-204	04-106-204	5/1	
1A2020	O	04-110-015	04-106-023	5/1	
1A2030	O	04-110-034	04-106-046	5/1	
1A3000	O	04-106-005	04-106-005	5/1	
1A3010	O	04-106-205	04-106-205	5/1	
1A3020	O	04-110-016	04-106-024	5/1	
1A3030	O	04-110-035	04-106-047	5/1	
1A4000	O	04-106-006	04-106-006	5/1	
1A4010	O	04-106-206	04-106-206	5/1	
1A4020	O	04-110-017	04-106-032	5/1	
1A4030	O	04-110-036	04-106-048	5/1	

ELEMENT IDENTIFIER (CONT)

B

SERVICE GROUP 1

TERM. MODIFIER	FUNC	ACCESS TERM.	FS TERM.	LOC FS/SYM	NOTE
1A5000	O	04-106-007	04-106-007	5/1	
1A5010	O	04-106-207	04-106-207	5/1	
1A5020	O	04-110-018	04-106-221	5/1	
1A5030	O	04-110-037	04-106-244	5/1	
1A6000	O	04-106-008	04-106-008	5/1	
1A6010	O	04-106-208	04-106-208	5/1	
1A6020	O	04-110-019	04-106-222	5/1	
1A6030	O	04-110-038	04-106-245	5/1	
1A7000	O	04-106-009	04-106-009	5/1	
1A7010	O	04-106-209	04-106-209	5/1	
1A7020	O	04-110-020	04-106-223	5/1	
1A7030	O	04-110-039	04-106-246	5/1	
1B0000	O	04-106-102	04-106-102	5/1	
1B0010	O	04-106-302	04-106-302	5/1	
1B0020	O	04-111-013	04-106-121	5/1	
1B0030	O	04-111-032	04-106-144	5/1	
1B1000	O	04-106-103	04-106-103	5/1	
1B1010	O	04-106-303	04-106-303	5/1	
1B1020	O	04-111-014	04-106-122	5/1	
1B1030	O	04-111-033	04-106-145	5/1	
1B2000	O	04-106-104	04-106-104	5/1	
1B2010	O	04-106-304	04-106-304	5/1	
1B2020	O	04-111-015	04-106-123	5/1	
1B2030	O	04-111-034	04-106-146	5/1	
1B3000	O	04-106-105	04-106-105	5/1	
1B3010	O	04-106-305	04-106-305	5/1	
1B3020	O	04-111-016	04-106-124	5/1	
1B3030	O	04-111-035	04-106-147	5/1	
1B4000	O	04-106-106	04-106-106	5/1	
1B4010	O	04-106-306	04-106-306	5/1	
1B4020	O	04-111-017	04-106-132	5/1	
1B4030	O	04-111-036	04-106-148	5/1	
1B5000	O	04-106-107	04-106-107	5/1	
1B5010	O	04-106-307	04-106-307	5/1	
1B5020	O	04-111-018	04-106-321	5/1	
1B5030	O	04-111-037	04-106-344	5/1	
1B6000	O	04-106-108	04-106-108	5/1	
1B6010	O	04-106-308	04-106-308	5/1	
1B6020	O	04-111-019	04-106-322	5/1	
1B6030	O	04-111-038	04-106-345	5/1	
1B7000	O	04-106-109	04-106-109	5/1	
1B7010	O	04-106-309	04-106-309	5/1	
1B7020	O	04-111-020	04-106-323	5/1	
1B7030	O	04-111-039	04-106-346	5/1	
1B8000	O	04-106-110	04-106-110	5/1	
1B8010	O	04-106-310	04-106-310	5/1	
1B8020	O	04-111-021	04-106-324	5/1	
1B8030	O	04-111-040	04-106-347	5/1	
1CLK01	O	04-106-139	04-106-139	5/1	
1CLK02	O	04-106-316	04-106-316	5/1	
1CLK03	O	04-106-339	04-106-339	5/1	
1CLK0N	I	04-106-252	04-106-252	5/1	P/1CLK0P
1CLK0P	I	04-106-352	04-106-352	5/1	P/1CLK0N
1CLK1N	I	04-106-052	04-106-052	5/1	P/1CLK1P
1CLK1P	I	04-106-152	04-106-152	5/1	P/1CLK1N
1DRIN1	I	04-106-037	04-106-037	5/1	
1DRIN2	I	04-106-214	04-106-214	5/1	
1DRIN3	I	04-106-237	04-106-237	5/1	
1DWOUT1	O	04-106-137	04-106-137	5/1	
1DWOUT2	O	04-106-314	04-106-314	5/1	
1DWOUT3	O	04-106-337	04-106-337	5/1	
1EARTHG	G	07-127-057	04-114-256	6/1	
1INTR0N	O	04-106-250	04-106-250	5/1	P/1INTR0P
1INTR0P	O	04-106-350	04-106-350	5/1	P/1INTR0N
1INTR1N	O	04-106-050	04-106-050	5/1	P/1INTR1P
1INTR1P	O	04-106-150	04-106-150	5/1	P/1INTR1N

ELEMENT IDENTIFIER (CONT)

B

SERVICE GROUP 1

TERM. MODIFIER	FUNC	ACCESS TERM.	FS TERM.	LOC FS/SYM	NOTE
1JR00	IO	04-178-202	04-178-202	7/1	P/1JT00
1JR01	IO	04-178-203	04-178-203	7/1	P/1JT01
1JT00	IO	04-178-302	04-178-302	7/1	P/1JR00
1JT01	IO	04-178-303	04-178-303	7/1	P/1JR01
1MSG0N	I	04-106-253	04-106-253	5/1	P/1MSG0P
1MSG0P	I	04-106-353	04-106-353	5/1	P/1MSG0N
1MSG1N	I	04-106-053	04-106-053	5/1	P/1MSG1P
1MSG1P	I	04-106-153	04-106-153	5/1	P/1MSG1N
1READ1	O	04-106-039	04-106-039	5/1	
1READ2	O	04-106-216	04-106-216	5/1	
1READ3	O	04-106-239	04-106-239	5/1	
1RPLY0N	O	04-106-254	04-106-254	5/1	P/1RPLY0P
1RPLY0P	O	04-106-354	04-106-354	5/1	P/1RPLY0N
1RPLY1N	O	04-106-054	04-106-054	5/1	P/1RPLY1P
1RPLY1P	O	04-106-154	04-106-154	5/1	P/1RPLY1N
1SLCT0N	I	04-106-251	04-106-251	5/1	P/1SLCT0P
1SLCT0P	I	04-106-351	04-106-351	5/1	P/1SLCT0N
1SLCT1N	I	04-106-051	04-106-051	5/1	P/1SLCT1P
1SLCT1P	I	04-106-151	04-106-151	5/1	P/1SLCT1N
1SRVR000	I	04-106-017	04-106-017	5/1	
1SRVR001	I	04-106-117	04-106-117	5/1	
1SRVR002	I	04-106-018	04-106-018	5/1	
1SRVR003	I	04-106-118	04-106-118	5/1	
1SRVR004	I	04-106-019	04-106-019	5/1	
1SRVR005	I	04-106-119	04-106-119	5/1	
1SRVR006	I	04-106-020	04-106-020	5/1	
1SRVR007	I	04-106-120	04-106-120	5/1	
1SRVR008	I	04-106-040	04-106-040	5/1	
1SRVR009	I	04-106-140	04-106-140	5/1	
1SRVR010	I	04-106-041	04-106-041	5/1	
1SRVR011	I	04-106-141	04-106-141	5/1	
1SRVR012	I	04-106-042	04-106-042	5/1	
1SRVR013	I	04-106-142	04-106-142	5/1	
1SRVR014	I	04-106-043	04-106-043	5/1	
1SRVR015	I	04-106-143	04-106-143	5/1	
1SRVR016	I	04-106-217	04-106-217	5/1	
1SRVR017	I	04-106-317	04-106-317	5/1	
1SRVR018	I	04-106-218	04-106-218	5/1	
1SRVR019	I	04-106-318	04-106-318	5/1	
1SRVR020	I	04-106-219	04-106-219	5/1	
1SRVR021	I	04-106-319	04-106-319	5/1	
1SRVR022	I	04-106-220	04-106-220	5/1	
1SRVR023	I	04-106-320	04-106-320	5/1	
1SRVR024	I	04-106-240	04-106-240	5/1	
1SRVR025	I	04-106-340	04-106-340	5/1	
1SRVR026	I	04-106-241	04-106-241	5/1	
1SRVR027	I	04-106-341	04-106-341	5/1	
1SRVR028	I	04-106-242	04-106-242	5/1	
1SRVR029	I	04-106-342	04-106-342	5/1	
1SRVR030	I	04-106-243	04-106-243	5/1	
1SRVR031	I	04-106-343	04-106-343	5/1	
1WRITE1	O	04-106-038	04-106-038	5/1	
1WRITE2	O	04-106-215	04-106-215	5/1	
1WRITE3	O	04-106-238	04-106-238	5/1	

ELEMENT IDENTIFIER

SEE PROPRIETARY NOTICE ON COVER SHEET

MODULAR METALLIC SERVICE UNIT	DWG SIZE: D	ISSUE: 3A
AT&T BELL LABORATORIES	SD-5D015-01	GB7

PRINTED IN U. S. A.

12/13/87

CAD 1
UNIT SYMBOL

ELEMENT IDENTIFIER (CONT)

C

MESSAGE INTERFACE BUS

TERM. MODIFIER	FUNC	ACCESS TERM.	FS TERM.	LOC FS/SYM	NOTE
MTIB00R	IO	04-178-204	04-090-204	3/1	P/MTIB00T
MTIB00R	IO	04-090-213	04-090-204	3/1	P/MTIB00T
MTIB00R	IO	04-178-213	04-090-204	3/1	P/MTIB00T
MTIB00T	IO	04-178-304	04-090-304	3/1	P/MTIB00R
MTIB00T	IO	04-090-313	04-090-304	3/1	P/MTIB00R
MTIB00T	IO	04-178-313	04-090-304	3/1	P/MTIB00R
MTIB01R	IO	04-178-214	04-090-205	3/1	P/MTIB01T
MTIB01R	IO	04-178-205	04-090-205	3/1	P/MTIB01T
MTIB01R	IO	04-090-214	04-090-205	3/1	P/MTIB01T
MTIB01T	IO	04-178-314	04-090-305	3/1	P/MTIB01R
MTIB01T	IO	04-090-314	04-090-305	3/1	P/MTIB01R
MTIB01T	IO	04-178-305	04-090-305	3/1	P/MTIB01R
MTIB02P	IO	04-090-215	04-090-206	3/1	P/MTIB02T
MTIB02R	IO	04-178-206	04-090-206	3/1	P/MTIB02T
MTIB02R	IO	04-178-215	04-090-206	3/1	P/MTIB02T
MTIB02T	IO	04-178-315	04-090-306	3/1	P/MTIB02R
MTIB02T	IO	04-178-306	04-090-306	3/1	P/MTIB02R
MTIB02T	IO	04-090-315	04-090-306	3/1	P/MTIB02R
MTIB03R	IO	04-090-216	04-090-207	3/1	P/MTIB03T
MTIB03R	IO	04-178-216	04-090-207	3/1	P/MTIB03T
MTIB03R	IO	04-178-207	04-090-207	3/1	P/MTIB03T
MTIB03T	IO	04-178-316	04-090-307	3/1	P/MTIB03R
MTIB03T	IO	04-090-316	04-090-307	3/1	P/MTIB03R
MTIB03T	IO	04-178-307	04-090-307	3/1	P/MTIB03R
MTIB04R	IO	04-178-208	04-090-208	3/1	P/MTIB04T
MTIB04R	IO	04-178-217	04-090-208	3/1	P/MTIB04T
MTIB04R	IO	04-090-217	04-090-208	3/1	P/MTIB04T
MTIB04T	IO	04-090-317	04-090-308	3/1	P/MTIB04R
MTIB04T	IO	04-178-317	04-090-308	3/1	P/MTIB04R
MTIB04T	IO	04-178-308	04-090-308	3/1	P/MTIB04R
MTIB05R	IO	04-090-218	04-090-209	3/1	P/MTIB05T
MTIB05R	IO	04-178-218	04-090-209	3/1	P/MTIB05T
MTIB05R	IO	04-178-209	04-090-209	3/1	P/MTIB05T
MTIB05T	IO	04-178-309	04-090-309	3/1	P/MTIB05R
MTIB05T	IO	04-090-318	04-090-309	3/1	P/MTIB05R
MTIB05T	IO	04-178-318	04-090-309	3/1	P/MTIB05R
MTIB06R	IO	04-090-219	04-090-210	3/1	P/MTIB06T
MTIB06R	IO	04-178-210	04-090-210	3/1	P/MTIB06T
MTIB06R	IO	04-178-219	04-090-210	3/1	P/MTIB06T
MTIB06T	IO	04-178-310	04-090-310	3/1	P/MTIB06R
MTIB06T	IO	04-178-319	04-090-310	3/1	P/MTIB06R
MTIB06T	IO	04-090-319	04-090-310	3/1	P/MTIB06R
MTIB07R	IO	04-178-211	04-090-211	3/1	P/MTIB07T
MTIB07R	IO	04-090-220	04-090-211	3/1	P/MTIB07T
MTIB07R	IO	04-178-220	04-090-211	3/1	P/MTIB07T
MTIB07T	IO	04-090-320	04-090-311	3/1	P/MTIB07R
MTIB07T	IO	04-178-320	04-090-311	3/1	P/MTIB07R
MTIB07T	IO	04-173-311	04-090-311	3/1	P/MTIB07R
MTIB08R	IO	04-178-236	04-090-245	3/1	P/MTIB08T
MTIB08R	IO	04-090-236	04-090-245	3/1	P/MTIB08T
MTIB08R	IO	04-178-245	04-090-245	3/1	P/MTIB08T
MTIB08T	IO	04-178-345	04-090-345	3/1	P/MTIB08R
MTIB08T	IO	04-090-336	04-090-345	3/1	P/MTIB08R
MTIB08T	IO	04-178-336	04-090-345	3/1	P/MTIB08R
MTIB09R	IO	04-178-237	04-090-246	3/1	P/MTIB09T
MTIB09R	IO	04-090-237	04-090-246	3/1	P/MTIB09T
MTIB09R	IO	04-178-246	04-090-246	3/1	P/MTIB09T
MTIB09T	IO	04-090-337	04-090-346	3/1	P/MTIB09R
MTIB09T	IO	04-178-337	04-090-346	3/1	P/MTIB09R
MTIB09T	IO	04-178-346	04-090-346	3/1	P/MTIB09R
MTIB10R	IO	04-178-238	04-090-247	3/1	P/MTIB10T
MTIB10R	IO	04-178-247	04-090-247	3/1	P/MTIB10T
MTIB10R	IO	04-090-238	04-090-247	3/1	P/MTIB10T
MTIB10T	IO	04-178-338	04-090-347	3/1	P/MTIB10R
MTIB10T	IO	04-178-347	04-090-347	3/1	P/MTIB10R
MTIB10T	IO	04-090-338	04-090-347	3/1	P/MTIB10R
MTIB11R	IO	04-090-239	04-090-248	3/1	P/MTIB11T
MTIB11R	IO	04-178-248	04-090-248	3/1	P/MTIB11T
MTIB11R	IO	04-178-239	04-090-248	3/1	P/MTIB11T
MTIB11T	IO	04-178-339	04-090-348	3/1	P/MTIB11R
MTIB11T	IO	04-178-348	04-090-348	3/1	P/MTIB11R
MTIB11T	IO	04-090-339	04-090-348	3/1	P/MTIB11R
MTIB12R	IO	04-178-249	04-090-249	3/1	P/MTIB12T
MTIB12R	IO	04-178-240	04-090-249	3/1	P/MTIB12T
MTIB12R	IO	04-090-240	04-090-249	3/1	P/MTIB12T
MTIB12T	IO	04-178-340	04-090-349	3/1	P/MTIB12R
MTI312T	IO	04-090-340	04-090-349	3/1	P/MTIB12R
MTIB12T	IO	04-178-349	04-090-349	3/1	P/MTIB12R
MTIB13R	IO	04-178-241	04-090-250	3/1	P/MTIB13T
MTIB13R	IO	04-178-250	04-090-250	3/1	P/MTIB13T
MTIB13R	IO	04-090-241	04-090-250	3/1	P/MTIB13T
MTIB13T	IO	04-178-350	04-090-350	3/1	P/MTIB13R
MTIB13T	IO	04-178-341	04-090-350	3/1	P/MTIB13R
MTIB13T	IO	04-090-341	04-090-350	3/1	P/MTIB13R
MTIB14R	O	04-178-251	04-018-212	1/1	P/MTIB14T
MTIB14R	O	04-090-242	04-018-212	1/1	P/MTIB14T
MTIB14R	O	04-178-242	04-018-212	1/1	P/MTIB14T
MTIB14T	O	04-178-342	04-018-312	1/1	P/MTIB14R
MTIB14T	O	04-090-342	04-018-312	1/1	P/MTIB14R
MTIB14T	O	04-178-351	04-018-312	1/1	P/MTIB14R
MTIB15R	O	04-178-243	04-106-212	5/1	P/MTIB15T
MTIB15R	O	04-090-243	04-106-212	5/1	P/MTIB15T
MTIB15R	O	04-178-252	04-106-212	5/1	P/MTIB15T
MTIB15T	IO	04-178-343	04-178-352	7/1	P/MTIB15R
MTIB15T	IO	04-178-352	04-178-352	7/1	P/MTIB15R
MTIB15T	IO	04-090-343	04-178-352	7/1	P/MTIB15R

SEE PROPRIETARY NOTICE ON COVER SHEET

MODULAR METALLIC SERVICE UNIT

DWG SIZE: D

ISSUE: 3A

ATET BELL LABORATORIES

SD-5D015-01

GB8

PRINTED IN U. S. A.

12/13/84

CAD 002

PERIPHERAL INTERFACE CONTROLLER BUS

TO CONNECTION DESTINATION	TO CONNECTION LEAD DESIG	METHOD	WIRE SYM	TERMINAL	FROM CONNECTION LEAD DESIG	FROM CONNECTION TERMINATION	FROM CONNECTION TERMINAL	OPT	NOTE
	.....J			04-018	JACK/CP	.....			
	NC			049	GRD04018				
TO INTERFACE MODULE PROCESSOR UNIT	0INTR1N		P001	050	0INTR1N				
	0SLCT1N		P002	051	0SLCT1N				
	0CLK1N		P003	052	0CLK1N				
|	0MSG1N		P004	053	0MSG1N				
|	0RPLY1N		P005	054	0RPLY1N				
	NC			149	GRD04018				
TO INTERFACE MODULE PROCESSOR UNIT	0INTR1P		P001	150	0INTR1P				
	0SLCT1P		P002	151	0SLCT1P				
	0CLK1P		P003	152	0CLK1P				
|	0MSG1P		P004	153	0MSG1P				
|	0RPLY1P		P005	154	0RPLY1P				
	.....J			04-018	JACK/CP	.....			
	NC			249	GRD04018				
TO INTERFACE MODULE PROCESSOR UNIT	0INTR0N		P007	250	0INTR0N				
	0SLCT0N		P008	251	0SLCT0N				
	0CLK0N		P009	252	0CLK0N				
|	0MSG0N		P010	253	0MSG0N				
|	0RPLY0N		P011	254	0RPLY0N				
	NC			349	GRD04018				
TO INTERFACE MODULE PROCESSOR UNIT	0INTR0P		P007	350	0INTR0P				
	0SLCT0P		P008	351	0SLCT0P				
	0CLK0P		P009	352	0CLK0P				
|	0MSG0P		P010	353	0MSG0P				
|	0RPLY0P		P011	354	0RPLY0P				
	.....J			04-106	JACK/CP	.....			
	NC			049	GRD04106				
TO INTERFACE MODULE PROCESSOR UNIT	1INTR1N		P012	050	1INTR1N				
	1SLCT1N		P013	051	1SLCT1N				
	1CLK1N		P014	052	1CLK1N				
|	1MSG1N		P015	053	1MSG1N				
|	1RPLY1N		P016	054	1RPLY1N				
	NC			149	GRD04106				
TO INTERFACE MODULE PROCESSOR UNIT	1INTR1P		P012	150	1INTR1P				
	1SLCT1P		P013	151	1SLCT1P				
	1CLK1P		P014	152	1CLK1P				
|	1MSG1P		P015	153	1MSG1P				
|	1RPLY1P		P016	154	1RPLY1P				
	.....J			04-106	JACK/CP	.....			
	NC			249	GRD04106				
TO INTERFACE MODULE PROCESSOR UNIT	1INTR0N		P018	250	1INTR0N				
	1SLCT0N		P019	251	1SLCT0N				
	1CLK0N		P020	252	1CLK0N				
|	1MSG0N		P021	253	1MSG0N				
|	1RPLY0N		P022	254	1RPLY0N				
	NC			349	GRD04106				
TO INTERFACE MODULE PROCESSOR UNIT	1INTR0P		P018	350	1INTR0P				
	1SLCT0P		P019	351	1SLCT0P				
	1CLK0P		P020	352	1CLK0P				
|	1MSG0P		P021	353	1MSG0P				
|	1RPLY0P		P022	354	1RPLY0P				

CAD 003

METALLIC TEST BUS

TO CONNECTION DESTINATION	TO CONNECTION LEAD DESIG	METHOD	WIRE SYM	TERMINAL	FROM CONNECTION LEAD DESIG	FROM CONNECTION TERMINATION	FROM CONNECTION TERMINAL	OPT	NOTE
	.....J			04-030	TF	.....			
TO CONN CKT	NC 0AR16L00 NC		P025	000 001 002	0AR16L00	04-026	CP	204	

CAD 003

(CONT'D)

TO CONNECTION DESTINATION	TO CONNECTION LEAD DESIG	METHOD	WIRE SYM	TERMINAL	FROM CONNECTION LEAD DESIG	FROM CONNECTION TERMINATION	FROM CONNECTION TERMINAL	OPT	NOTE
	.....J			04-031	TF	.....			
TO CONN CKT	NC 0AT16L00 NC		P025	000 001 002	0AT16L00	04-026	CP	304	
	.....J			04-038	TF	.....			
TO CONN CKT	NC 0AR16L01 NC		P028	000 001 002	0AR16L01	04-034	CP	204	
	.....J			04-039	TF	.....			
TO CONN CKT	NC 0AT16L01 NC		P028	000 001 002	0AT16L01	04-034	CP	304	
	.....J			04-046	TF	.....			
TO CONN CKT	NC 0AR16L02 NC		P031	000 001 002	0AR16L02	04-042	CP	204	
	.....J			04-047	TF	.....			
TO CONN CKT	NC 0AT16L02 NC		P031	000 001 002	0AT16L02	04-042	CP	304	
	.....J			04-030	TF	.....			
TO CONN CKT	NC 0AR17L00 NC		P034	003 004 005	0AR17L00	04-026	CP	205	
	.....J			04-031	TF	.....			
TO CONN CKT	NC 0AT17L00 NC		P034	003 004 005	0AT17L00	04-026	CP	305	
	.....J			04-038	TF	.....			
TO CONN CKT	NC 0AR17L01 NC		P037	003 004 005	0AR17L01	04-034	CP	205	
	.....J			04-039	TF	.....			
TO CONN CKT	NC 0AT17L01 NC		P037	003 004 005	0AT17L01	04-034	CP	305	
	.....J			04-046	TF	.....			
TO CONN CKT	NC 0AR17L02 NC		P040	003 004 005	0AR17L02	04-042	CP	205	
	.....J			04-047	TF	.....			
TO CONN CKT	NC 0AT17L02 NC		P040	003 004 005	0AT17L02	04-042	CP	305	
	.....J			04-030	TF	.....			
TO CONN CKT	NC 0AR18L00 NC		P043	006 007 008	0AR18L00	04-026	CP	206	

CAD 003

(CONT'D)

TO CONNECTION DESTINATION	TO CONNECTION LEAD DESIG	METHOD	WIRE SYM	TERMINAL	FROM CONNECTION LEAD DESIG	FROM CONNECTION TERMINATION	FROM CONNECTION TERMINAL	OPT	NOTE
	.....J			04-031	TF	.....			
TO CONN CKT	NC 0AT18L00 NC		P043	006 007 008	0AT18L00	04-026	CP	306	
	.....J			04-038	TF	.....			
TO CONN CKT	NC 0AR18L01 NC		P046	006 007 008	0AR18L01	04-034	CP	206	
	.....J			04-039	TF	.....			
TO CONN CKT	NC 0AT18L01 NC		P046	006 007 008	0AT18L01	04-034	CP	306	
	.....J			04-046	TF	.....			
TO CONN CKT	NC 0AR18L02 NC		P049	006 007 008	0AR18L02	04-042	CP	206	
	.....J			04-047	TF	.....			
TO CONN CKT	NC 0AT18L02 NC		P049	006 007 008	0AT18L02	04-042	CP	306	
	.....J			04-030	TF	.....			
TO CONN CKT	NC 0AR19L00 NC		P052	009 010 011	0AR19L00	04-026	CP	207	
	.....J			04-031	TF	.....			
TO CONN CKT	NC 0AT19L00 NC		P052	009 010 011	0AT19L00	04-026	CP	307	
	.....J			04-038	TF	.....			
TO CONN CKT	NC 0AR19L01 NC		P055	009 010 011	0AR19L01	04-034	CP	207	
	.....J			04-039	TF	.....			
TO CONN CKT	NC 0AT19L01 NC		P055	009 010 011	0AT19L01	04-034	CP	307	
	.....J			04-046	TF	.....			
TO CONN CKT	NC 0AR19L02 NC		P058	009 010 011	0AR19L02	04-042	CP	207	

SEE PROPRIETARY NOTICE ON COVER SHEET

MODULAR METALLIC SERVICE UNIT

DWG SIZE: C2 | ISSUE: 2D

AT&T BELL LABORATORIES | SD-5D015-01 | GB9

PRINTED IN U. S. A. 12/14/84

CAD 003 (CONT'D)

TO CONNECTION					FROM CONNECTION					
DESTINATION	LEAD DESIG	METHOD	WIRE SYM	TERMINAL	LEAD DESIG	TERMINATION	TERMINAL	OPT	NOTE
.....	J			04-047	TF	.....			
TO CONN CKT	NC 0AT19L02 NC	P058		009 010 011	0AT19L02	04-042	CP	307	
.....	J			04-030	TF	.....			
TO CONN CKT	NC 0AR20L00 NC	P061		013 014 015	0AR20L00	04-026	CP	208	
.....	J			04-031	TF	.....			
TO CONN CKT	NC 0AT20L00 NC	P061		013 014 015	0AT20L00	04-026	CP	308	
.....	J			04-038	TF	.....			
TO CONN CKT	NC 0AR20L01 NC	P064		013 014 015	0AR20L01	04-034	CP	208	
.....	J			04-039	TF	.....			
TO CONN CKT	NC 0AT20L01 NC	P064		013 014 015	0AT20L01	04-034	CP	308	
.....	J			04-046	TF	.....			
TO CONN CKT	NC 0AR20L02 NC	P067		013 014 015	0AR20L02	04-042	CP	208	
.....	J			04-047	TF	.....			
TO CONN CKT	NC 0AT20L02 NC	P067		013 014 015	0AT20L02	04-042	CP	308	
.....	J			04-030	TF	.....			
TO CONN CKT	NC 0AR21L00 NC	P070		016 017 018	0AR21L00	04-026	CP	209	
.....	J			04-031	TF	.....			
TO CONN CKT	NC 0AT21L00 NC	P070		016 017 018	0AT21L00	04-026	CP	309	
.....	J			04-038	TF	.....			
TO CONN CKT	NC 0AR21L01 NC	P073		016 017 018	0AR21L01	04-034	CP	209	
.....	J			04-039	TF	.....			
TO CONN CKT	NC 0AT21L01 NC	P073		016 017 018	0AT21L01	04-034	CP	309	
.....	J			04-046	TF	.....			
TO CONN CKT	NC 0AR21L02 NC	P076		016 017 018	0AR21L02	04-042	CP	209	

CAD 003 (CONT'D)

TO CONNECTION					FROM CONNECTION					
DESTINATION	LEAD DESIG	METHOD	WIRE SYM	TERMINAL	LEAD DESIG	TERMINATION	TERMINAL	OPT	NOTE
.....	J			04-047	TF	.....			
TO CONN CKT	NC 0AT21L02 NC	P076		016 017 018	0AT21L02	04-042	CP	309	
.....	J			04-030	TF	.....			
TO CONN CKT	NC 0AR22L00 NC	P079		019 020 021	0AR22L00	04-026	CP	Z10	
.....	J			04-031	TF	.....			
TO CONN CKT	NC 0AT22L00 NC	P079		019 020 021	0AT22L00	04-026	CP	310	
.....	J			04-038	TF	.....			
TO CONN CKT	NC 0AR22L01 NC	P082		019 020 021	0AR22L01	04-034	CP	Z10	
.....	J			04-039	TF	.....			
TO CONN CKT	NC 0AT22L01 NC	P082		019 020 021	0AT22L01	04-034	CP	310	
.....	J			04-046	TF	.....			
TO CONN CKT	NC 0AR22L02 NC	P084		019 020 021	0AR22L02	04-042	CP	Z10	
.....	J			04-047	TF	.....			
TO CONN CKT	NC 0AT22L02 NC	P084		019 020 021	0AT22L02	04-042	CP	310	
.....	J			04-030	TF	.....			
TO CONN CKT	NC 0AR23L00 NC	P087		022 023 024	0AR23L00	04-026	CP	Z11	
.....	J			04-031	TF	.....			
TO CONN CKT	NC 0AT23L00 NC	P087		022 023 024	0AT23L00	04-026	CP	311	
.....	J			04-038	TF	.....			
TO CONN CKT	NC 0AR23L01 NC	P090		022 023 024	0AR23L01	04-034	CP	Z11	
.....	J			04-039	TF	.....			
TO CONN CKT	NC 0AT23L01 NC	P090		022 023 024	0AT23L01	04-034	CP	311	
.....	J			04-046	TF	.....			
TO CONN CKT	NC 0AR23L02 NC	P093		022 023 024	0AR23L02	04-042	CP	Z11	

CAD 003 (CONT'D)

TO CONNECTION					FROM CONNECTION					
DESTINATION	LEAD DESIG	METHOD	WIRE SYM	TERMINAL	LEAD DESIG	TERMINATION	TERMINAL	OPT	NOTE
.....	J			04-047	TF	.....			
TO CONN CKT	NC 0AT23L02 NC	P093		022 023 024	0AT23L02	04-042	CP	311	
.....	J			04-030	TF	.....			
TO CONN CKT	NC 0AR24L00 NC	P096		032 033 034	0AR24L00	04-026	CP	245	
.....	J			04-031	TF	.....			
TO CONN CKT	NC 0AT24L00 NC	P096		032 033 034	0AT24L00	04-026	CP	345	
.....	J			04-038	TF	.....			
TO CONN CKT	NC 0AR24L01 NC	P099		032 033 034	0AR24L01	04-034	CP	245	
.....	J			04-039	TF	.....			
TO CONN CKT	NC 0AT24L01 NC	P099		032 033 034	0AT24L01	04-034	CP	345	
.....	J			04-046	TF	.....			
TO CONN CKT	NC 0AR24L02 NC	P102		032 033 034	0AR24L02	04-042	CP	245	
.....	J			04-047	TF	.....			
TO CONN CKT	NC 0AT24L02 NC	P102		032 033 034	0AT24L02	04-042	CP	345	
.....	J			04-030	TF	.....			
TO CONN CKT	NC 0AR25L00 NC	P105		035 036 037	0AR25L00	04-026	CP	246	
.....	J			04-031	TF	.....			
TO CONN CKT	NC 0AT25L00 NC	P105		035 036 037	0AT25L00	04-026	CP	346	
.....	J			04-038	TF	.....			
TO CONN CKT	NC 0AR25L01 NC	P108		035 036 037	0AR25L01	04-034	CP	246	

SEE PROPRIETARY NOTICE ON COVER SHEET

MODULAR METALLIC SERVICE UNIT		DWG SIZE C2	ISSUE 2D
AT&T BELL LABORATORIES	SD-5D015-01		GB10

PRINTED IN U. S. A. 12714784

CAD 003 (CONT'D)

TO CONNECTION					FROM CONNECTION				
DESTINATION	LEAD DESIG	METHOD	WIRE SYM	TERMINAL	LEAD DESIG	TERMINATION	TERMINAL	OPT	NOTE
.....	J			04-039	TF	.....			
TO CONN CKT	NC 0AT25L01 NC		P108	035 036 037	0AT25L01	04-034	CP 346		
.....	J			04-046	TF	.....			
TO CONN CKT	NC 0AR25L02 NC		P111	035 036 037	0AR25L02	04-042	CP 246		
.....	J			04-047	TF	.....			
TO CONN CKT	NC 0AT25L02 NC		P111	035 036 037	0AT25L02	04-042	CP 346		
.....	J			04-030	TF	.....			
TO CONN CKT	NC 0AR26L00 NC		P114	038 039 040	0AR26L00	04-026	CP 247		
.....	J			04-031	TF	.....			
TO CONN CKT	NC 0AT26L00 NC		P114	038 039 040	0AT26L00	04-026	CP 347		
.....	J			04-038	TF	.....			
TO CONN CKT	NC 0AR26L01 NC		P117	038 039 040	0AR26L01	04-034	CP 247		
.....	J			04-039	TF	.....			
TO CONN CKT	NC 0AT26L01 NC		P117	038 039 040	0AT26L01	04-034	CP 347		
.....	J			04-046	TF	.....			
TO CONN CKT	NC 0AR26L02 NC		P120	038 039 040	0AR26L02	04-042	CP 247		
.....	J			04-047	TF	.....			
TO CONN CKT	NC 0AT26L02 NC		P120	038 039 040	0AT26L02	04-042	CP 347		
.....	J			04-030	TF	.....			
TO CONN CKT	NC 0AR27L00 NC		P123	041 042 043	0AR27L00	04-026	CP Z48		
.....	J			04-031	TF	.....			
TO CONN CKT	NC 0AT27L00 NC		P123	041 042 043	0AT27L00	04-026	CP 348		
.....	J			04-038	TF	.....			
TO CONN CKT	NC 0AR27L01 NC		P126	041 042 043	0AR27L01	04-034	CP Z48		

CAD 003 (CONT'D)

TO CONNECTION					FROM CONNECTION				
DESTINATION	LEAD DESIG	METHOD	WIRE SYM	TERMINAL	LEAD DESIG	TERMINATION	TERMINAL	OPT	NOTE
.....	J			04-039	TF	.....			
TO CONN CKT	NC 0AT27L01 NC		P126	041 042 043	0AT27L01	04-034	CP 348		
.....	J			04-046	TF	.....			
TO CONN CKT	NC 0AR27L02 NC		P129	041 042 043	0AR27L02	04-042	CP Z48		
.....	J			04-047	TF	.....			
TO CONN CKT	NC 0AT27L02 NC		P129	041 042 043	0AT27L02	04-042	CP 348		
.....	J			04-030	TF	.....			
TO CONN CKT	NC 0AR28L00 NC		P132	045 046 047	0AR28L00	04-026	CP Z49		
.....	J			04-031	TF	.....			
TO CONN CKT	NC 0AT28L00 NC		P132	045 046 047	0AT28L00	04-026	CP 349		
.....	J			04-038	TF	.....			
TO CONN CKT	NC 0AR28L01 NC		P135	045 046 047	0AR28L01	04-034	CP Z49		
.....	J			04-039	TF	.....			
TO CONN CKT	NC 0AT28L01 NC		P135	045 046 047	0AT28L01	04-034	CP 349		
.....	J			04-046	TF	.....			
TO CONN CKT	NC 0AR28L02 NC		P138	045 046 047	0AR28L02	04-042	CP Z49		
.....	J			04-047	TF	.....			
TO CONN CKT	NC 0AT28L02 NC		P138	045 046 047	0AT28L02	04-042	CP 349		
.....	J			04-030	TF	.....			
TO CONN CKT	NC 0AR29L00 NC		P141	048 049 050	0AR29L00	04-026	CP Z50		
.....	J			04-031	TF	.....			
TO CONN CKT	NC 0AT29L00 NC		P141	048 049 050	0AT29L00	04-026	CP 350		
.....	J			04-038	TF	.....			
TO CONN CKT	NC 0AR29L01 NC		P144	048 049 050	0AR29L01	04-034	CP Z50		

CAD 003 (CONT'D)

TO CONNECTION					FROM CONNECTION				
DESTINATION	LEAD DESIG	METHOD	WIRE SYM	TERMINAL	LEAD DESIG	TERMINATION	TERMINAL	OPT	NOTE
.....	J			04-039	TF	.....			
TO CONN CKT	NC 0AT29L01 NC		P144	048 049 050	0AT29L01	04-034	CP 350		
.....	J			04-046	TF	.....			
TO CONN CKT	NC 0AR29L02 NC		P147	048 049 050	0AR29L02	04-042	CP Z50		
.....	J			04-047	TF	.....			
TO CONN CKT	NC 0AT29L02 NC		P147	048 049 050	0AT29L02	04-042	CP 350		
.....	J			04-030	TF	.....			
TO CONN CKT	NC 0AR30L00 NC		P150	051 052 053	0AR30L00	04-026	CP Z51		
.....	J			04-031	TF	.....			
TO CONN CKT	NC 0AT30L00 NC		P150	051 052 053	0AT30L00	04-026	CP 351		
.....	J			04-038	TF	.....			
TO CONN CKT	NC 0AR30L01 NC		P153	051 052 053	0AR30L01	04-034	CP Z51		
.....	J			04-039	TF	.....			
TO CONN CKT	NC 0AT30L01 NC		P153	051 052 053	0AT30L01	04-034	CP 351		
.....	J			04-046	TF	.....			
TO CONN CKT	NC 0AR30L02 NC		P156	051 052 053	0AR30L02	04-042	CP Z51		
.....	J			04-047	TF	.....			
TO CONN CKT	NC 0AT30L02 NC		P156	051 052 053	0AT30L02	04-042	CP 351		
.....	J			04-030	TF	.....			
TO CONN CKT	NC 0AR31L00 NC		P159	054 055 056	0AR31L00	04-026	CP Z52		

SEE PROPRIETARY NOTICE ON COVER SHEET

MODULAR METALLIC SERVICE UNIT

DWG SIZE: D

ISSUE: 2D

AT&T BELL LABORATORIES

SD-5D015-01

GB11

PRINTED IN U. S. A.

12/14/84

CAD 003 (CONT'D)

TO CONNECTION: DESTINATION	LEAD DESIG	METHOD	WIRE SYM	TERMINAL	FROM CONNECTION: LEAD DESIG	TERMINATION	TERMINAL	OPT	NOTE
.....	J			04-031	TF	.....			
TO CONN CKT	NC 0AT31L00 NC	P159	054 055 056		0AT31L00	04-026 CP	352		
.....	J			04-038	TF	.....			
TO CONN CKT	NC 0AR31L01 NC	P162	054 055 056		0AR31L01	04-034 CP	252		
.....	J			04-039	TF	.....			
TO CONN CKT	NC 0AT31L01 NC	P162	054 055 056		0AT31L01	04-034 CP	352		
.....	J			04-046	TF	.....			
TO CONN CKT	NC 0AR31L02 NC	P165	054 055 056		0AR31L02	04-042 CP	252		
.....	J			04-047	TF	.....			
TO CONN CKT	NC 0AT31L02 NC	P165	054 055 056		0AT31L02	04-042 CP	352		
.....	J			04-118	TF	.....			
TO CONN CKT	NC 1AR16L00 NC	P168	000 001 002		1AR16L00	04-114 CP	204		
.....	J			04-119	TF	.....			
TO CONN CKT	NC 1AT16L00 NC	P168	000 001 002		1AT16L00	04-114 CP	304		
.....	J			04-126	TF	.....			
TO CONN CKT	NC 1AR16L01 NC	P171	000 001 002		1AR16L01	04-122 CP	204		
.....	J			04-127	TF	.....			
TO CONN CKT	NC 1AT16L01 NC	P171	000 001 002		1AT16L01	04-122 CP	304		
.....	J			04-134	TF	.....			
TO CONN CKT	NC 1AP16L02 NC	P174	000 001 002		1AR16L02	04-130 CP	204		
.....	J			04-135	TF	.....			
TO CONN CKT	NC 1AT16L02 NC	P174	000 001 002		1AT16L02	04-130 CP	304		
.....	J			04-118	TF	.....			
TO CONN CKT	NC 1AR17L00 NC	P177	003 004 005		1AR17L00	04-114 CP	205		

CAD 003 (CONT'D)

TO CONNECTION: DESTINATION	LEAD DESIG	METHOD	WIRE SYM	TERMINAL	FROM CONNECTION: LEAD DESIG	TERMINATION	TERMINAL	OPT	NOTE
.....	J			04-119	TF	.....			
TO CONN CKT	NC 1AT17L00 NC	P177	003 004 005		1AT17L00	04-114 CP	305		
.....	J			04-126	TF	.....			
TO CONN CKT	NC 1AR17L01 NC	P180	003 004 005		1AR17L01	04-122 CP	205		
.....	J			04-127	TF	.....			
TO CONN CKT	NC 1AT17L01 NC	P180	003 004 005		1AT17L01	04-122 CP	305		
.....	J			04-134	TF	.....			
TO CONN CKT	NC 1AR17L02 NC	P183	003 004 005		1AR17L02	04-130 CP	205		
.....	J			04-135	TF	.....			
TO CONN CKT	NC 1AT17L02 NC	P183	003 004 005		1AT17L02	04-130 CP	305		
.....	J			04-118	TF	.....			
TO CONN CKT	NC 1AR18L00 NC	P186	006 007 008		1AR18L00	04-114 CP	206		
.....	J			04-119	TF	.....			
TO CONN CKT	NC 1AT18L00 NC	P186	006 007 008		1AT18L00	04-114 CP	306		
.....	J			04-126	TF	.....			
TO CONN CKT	NC 1AR18L01 NC	P189	006 007 008		1AR18L01	04-122 CP	206		
.....	J			04-127	TF	.....			
TO CONN CKT	NC 1AT18L01 NC	P189	006 007 008		1AT18L01	04-122 CP	306		
.....	J			04-134	TF	.....			
TO CONN CKT	NC 1AR18L02 NC	P192	006 007 008		1AR18L02	04-130 CP	206		
.....	J			04-135	TF	.....			
TO CONN CKT	NC 1AT18L02 NC	P192	006 007 008		1AT18L02	04-130 CP	306		
.....	J			04-118	TF	.....			
TO CONN CKT	NC 1AR19L00 NC	P195	009 010 011		1AR19L00	04-114 CP	207		

CAD 003 (CONT'D)

TO CONNECTION: DESTINATION	LEAD DESIG	METHOD	WIRE SYM	TERMINAL	FROM CONNECTION: LEAD DESIG	TERMINATION	TERMINAL	OPT	NOTE
.....	J			04-119	TF	.....			
TO CONN CKT	NC 1AT19L00 NC	P195	009 010 011		1AT19L00	04-114 CP	307		
.....	J			04-126	TF	.....			
TO CONN CKT	NC 1AR19L01 NC	P198	009 010 011		1AR19L01	04-122 CP	207		
.....	J			04-127	TF	.....			
TO CONN CKT	NC 1AT19L01 NC	P198	009 010 011		1AT19L01	04-122 CP	307		
.....	J			04-134	TF	.....			
TO CONN CKT	NC 1AR19L02 NC	P201	009 010 011		1AR19L02	04-130 CP	207		
.....	J			04-135	TF	.....			
TO CONN CKT	NC 1AT19L02 NC	P201	009 010 011		1AT19L02	04-130 CP	307		
.....	J			04-118	TF	.....			
TO CONN CKT	NC 1AR20L00 NC	P204	013 014 015		1AR20L00	04-114 CP	208		
.....	J			04-119	TF	.....			
TO CONN CKT	NC 1AT20L00 NC	P204	013 014 015		1AT20L00	04-114 CP	308		
.....	J			04-126	TF	.....			
TO CONN CKT	NC 1AR20L01 NC	P207	013 014 015		1AR20L01	04-122 CP	208		
.....	J			04-127	TF	.....			
TO CONN CKT	NC 1AT20L01 NC	P207	013 014 015		1AT20L01	04-122 CP	308		
.....	J			04-134	TF	.....			
TO CONN CKT	NC 1AR20L02 NC	P210	013 014 015		1AR20L02	04-130 CP	208		

SEE PROPRIETARY NOTICE ON COVER SHEET

MODULAR METALLIC SERVICE UNIT

DWG SIZE	ISSUE
C2	2D

AT&T BELL LABORATORIES | SD-5D015-01 | GB12

PRINTED IN U. S. A. 12/14/84

CAD 003 (CONT'D)

TO CONNECTION DESTINATION	TO CONNECTION LEAD DESIG	METHOD	WIRE SYM	TO CONNECTION TERMINAL	FROM CONNECTION LEAD DESIG	FROM CONNECTION TERMINATION	FROM CONNECTION TERMINAL	OPT	NOTE
	J			04-135	TF				
TO CONN CKT	NC 1AT20L02 NC		P210	013 014 015	1AT20L02	04-130 CP	308		
	J			04-118	TF				
TO CONN CKT	NC 1AR21L00 NC		P213	016 017 018	1AR21L00	04-114 CP	Z09		
	J			04-119	TF				
TO CONN CKT	NC 1AT21L00 NC		P213	016 017 018	1AT21L00	04-114 CP	309		
	J			04-126	TF				
TO CONN CKT	NC 1AR21L01 NC		P216	016 017 018	1AR21L01	04-122 CP	Z09		
	J			04-127	TF				
TO CONN CKT	NC 1AT21L01 NC		P216	016 017 018	1AT21L01	04-122 CP	309		
	J			04-134	TF				
TO CONN CKT	NC 1AR21L02 NC		P219	016 017 018	1AR21L02	04-130 CP	Z09		
	J			04-135	TF				
TO CONN CKT	NC 1AT21L02 NC		P219	016 017 018	1AT21L02	04-130 CP	309		
	J			04-118	TF				
TO CONN CKT	NC 1AR22L00 NC		P222	019 020 021	1AR22L00	04-114 CP	Z10		
	J			04-119	TF				
TO CONN CKT	NC 1AT22L00 NC		P222	019 020 021	1AT22L00	04-114 CP	310		
	J			04-126	TF				
TO CONN CKT	NC 1AR22L01 NC		P225	019 020 021	1AR22L01	04-122 CP	Z10		
	J			04-127	TF				
TO CONN CKT	NC 1AT22L01 NC		P225	019 020 021	1AT22L01	04-122 CP	310		
	J			04-134	TF				
TO CONN CKT	NC 1AR22L02 NC		P228	019 020 021	1AR22L02	04-130 CP	Z10		

CAD 003 (CONT'D)

TO CONNECTION DESTINATION	TO CONNECTION LEAD DESIG	METHOD	WIRE SYM	TO CONNECTION TERMINAL	FROM CONNECTION LEAD DESIG	FROM CONNECTION TERMINATION	FROM CONNECTION TERMINAL	OPT	NOTE
	J			04-135	TF				
TO CONN CKT	NC 1AT22L02 NC		PZ28	019 020 021	1AT22L02	04-130 CP	310		
	J			04-118	TF				
TO CONN CKT	NC 1AR23L00 NC		P231	022 023 024	1AR23L00	04-114 CP	Z11		
	J			04-119	TF				
TO CONN CKT	NC 1AT23L00 NC		P231	022 023 024	1AT23L00	04-114 CP	311		
	J			04-126	TF				
TO CONN CKT	NC 1AR23L01 NC		P234	022 023 024	1AR23L01	04-122 CP	Z11		
	J			04-127	TF				
TO CONN CKT	NC 1AT23L01 NC		P234	022 023 024	1AT23L01	04-122 CP	311		
	J			04-134	TF				
TO CONN CKT	NC 1AR23L02 NC		P237	022 023 024	1AR23L02	04-130 CP	Z11		
	J			04-135	TF				
TO CONN CKT	NC 1AT23L02 NC		P237	022 023 024	1AT23L02	04-130 CP	311		
	J			04-118	TF				
TO CONN CKT	NC 1AR24L00 NC		P240	032 033 034	1AR24L00	04-114 CP	Z45		
	J			04-119	TF				
TO CONN CKT	NC 1AT24L00 NC		P240	032 033 034	1AT24L00	04-114 CP	345		
	J			04-126	TF				
TO CONN CKT	NC 1AR24L01 NC		P243	032 033 034	1AR24L01	04-122 CP	Z45		
	J			04-127	TF				
TO CONN CKT	NC 1AT24L01 NC		P243	032 033 034	1AT24L01	04-122 CP	345		
	J			04-134	TF				
TO CONN CKT	NC 1AR24L02 NC		P246	032 033 034	1AR24L02	04-130 CP	Z45		

CAD 003 (CONT'D)

TO CONNECTION DESTINATION	TO CONNECTION LEAD DESIG	METHOD	WIRE SYM	TO CONNECTION TERMINAL	FROM CONNECTION LEAD DESIG	FROM CONNECTION TERMINATION	FROM CONNECTION TERMINAL	OPT	NOTE
	J			04-135	TF				
TO CONN CKT	NC 1AT24L02 NC		P246	032 033 034	1AT24L02	04-130 CP	345		
	J			04-118	TF				
TO CONN CKT	NC 1AR25L00 NC		P249	035 036 037	1AR25L00	04-114 CP	Z46		
	J			04-119	TF				
TO CONN CKT	NC 1AT25L00 NC		P249	035 036 037	1AT25L00	04-114 CP	346		
	J			04-126	TF				
TO CONN CKT	NC 1AR25L01 NC		P252	035 036 037	1AR25L01	04-122 CP	Z46		
	J			04-127	TF				
TO CONN CKT	NC 1AT25L01 NC		P252	035 036 037	1AT25L01	04-122 CP	346		
	J			04-134	TF				
TO CONN CKT	NC 1AR25L02 NC		P255	035 036 037	1AR25L02	04-130 CP	Z46		
	J			04-135	TF				
TO CONN CKT	NC 1AT25L02 NC		P255	035 036 037	1AT25L02	04-130 CP	346		
	J			04-118	TF				
TO CONN CKT	NC 1AR26L00 NC		P258	038 039 040	1AR26L00	04-114 CP	Z47		
	J			04-119	TF				
TO CONN CKT	NC 1AT26L00 NC		P258	038 039 040	1AT26L00	04-114 CP	347		
	J			04-126	TF				
TO CONN CKT	NC 1AR26L01 NC		P261	038 039 040	1AR26L01	04-122 CP	Z47		

SEE PROPRIETARY NOTICE ON COVER SHEET

MODULAR METALLIC SERVICE UNIT

DWG SIZE C2 | ISSUE 2D

AT&T BELL LABORATORIES | SD-5D015-01 | GB13

PRINTED IN U. S. A.

12714784

CAD 003
(CONT'D)

TO CONNECTION					FROM CONNECTION					
DESTINATION	LEAD DESIG	METHOD	WIRE SYM	TERMINAL	LEAD DESIG	TERMINATION	TERMINAL	OPT	NOTE
.....	J			04-127	TF	.....			
TO CONN CKT	NC 1AT26L01 NC		PZ61	038 039 040	1AT26L01	04-122 CP	347		
.....	J			04-134	TF	.....			
TO CONN CKT	NC 1AR26L02 NC		P264	038 039 040	1AR26L02	04-130 CP	247		
.....	J			04-135	TF	.....			
TO CONN CKT	NC 1AT26L02 NC		P264	038 039 040	1AT26L02	04-130 CP	347		
.....	J			04-118	TF	.....			
TO CONN CKT	NC 1AR27L00 NC		P267	041 042 043	1AR27L00	04-114 CP	248		
.....	J			04-119	TF	.....			
TO CONN CKT	NC 1AT27L00 NC		P267	041 042 043	1AT27L00	04-114 CP	348		
.....	J			04-126	TF	.....			
TO CONN CKT	NC 1AR27L01 NC		P270	041 042 043	1AR27L01	04-122 CP	248		
.....	J			04-127	TF	.....			
TO CONN CKT	NC 1AT27L01 NC		P270	041 042 043	1AT27L01	04-122 CP	348		
.....	J			04-134	TF	.....			
TO CONN CKT	NC 1AR27L02 NC		P273	041 042 043	1AR27L02	04-130 CP	248		
.....	J			04-135	TF	.....			
TO CONN CKT	NC 1AT27L02 NC		P273	041 042 043	1AT27L02	04-130 CP	348		
.....	J			04-118	TF	.....			
TO CONN CKT	NC 1AR28L00 NC		P276	045 046 047	1AR28L00	04-114 CP	249		
.....	J			04-119	TF	.....			
TO CONN CKT	NC 1AT28L00 NC		P276	045 046 047	1AT28L00	04-114 CP	349		
.....	J			04-126	TF	.....			
TO CONN CKT	NC 1AR28L01 NC		P279	045 046 047	1AR28L01	04-122 CP	249		

CAD 003
(CONT'D)

TO CONNECTION					FROM CONNECTION					
DESTINATION	LEAD DESIG	METHOD	WIRE SYM	TERMINAL	LEAD DESIG	TERMINATION	TERMINAL	OPT	NOTE
.....	J			04-127	TF	.....			
TO CONN CKT	NC 1AT28L01 NC		P279	045 046 047	1AT28L01	04-122 CP	349		
.....	J			04-134	TF	.....			
TO CONN CKT	NC 1AR28L02 NC		P282	045 046 047	1AR28L02	04-130 CP	249		
.....	J			04-135	TF	.....			
TO CONN CKT	NC 1AT28L02 NC		P282	045 046 047	1AT28L02	04-130 CP	349		
.....	J			04-118	TF	.....			
TO CONN CKT	NC 1AR29L00 NC		P285	048 049 050	1AR29L00	04-114 CP	250		
.....	J			04-119	TF	.....			
TO CONN CKT	NC 1AT29L00 NC		P285	048 049 050	1AT29L00	04-114 CP	350		
.....	J			04-126	TF	.....			
TO CONN CKT	NC 1AR29L01 NC		P288	048 049 050	1AR29L01	04-122 CP	250		
.....	J			04-127	TF	.....			
TO CONN CKT	NC 1AT29L01 NC		P288	048 049 050	1AT29L01	04-122 CP	350		
.....	J			04-134	TF	.....			
TO CONN CKT	NC 1AR29L02 NC		P291	048 049 050	1AR29L02	04-130 CP	250		
.....	J			04-135	TF	.....			
TO CONN CKT	NC 1AT29L02 NC		P291	048 049 050	1AT29L02	04-130 CP	350		
.....	J			04-118	TF	.....			
TO CONN CKT	NC 1AR30L00 NC		P294	051 052 053	1AR30L00	04-114 CP	251		
.....	J			04-119	TF	.....			
TO CONN CKT	NC 1AT30L00 NC		P294	051 052 053	1AT30L00	04-114 CP	351		
.....	J			04-126	TF	.....			
TO CONN CKT	NC 1AR30L01 NC		P297	051 052 053	1AR30L01	04-122 CP	251		

CAD 003
(CONT'D)

TO CONNECTION					FROM CONNECTION					
DESTINATION	LEAD DESIG	METHOD	WIRE SYM	TERMINAL	LEAD DESIG	TERMINATION	TERMINAL	OPT	NOTE
.....	J			04-127	TF	.....			
TO CONN CKT	NC 1AT30L01 NC		P297	051 052 053	1AT30L01	04-122 CP	351		
.....	J			04-134	TF	.....			
TO CONN CKT	NC 1AR30L02 NC		P300	051 052 053	1AR30L02	04-130 CP	251		
.....	J			04-135	TF	.....			
TO CONN CKT	NC 1AT30L02 NC		P300	051 052 053	1AT30L02	04-130 CP	351		
.....	J			04-118	TF	.....			
TO DISTRIBUTING FRAME	NC 1AR31L00 NC		P303	054 055 056	1AR31L00	04-114 CP	252	V	108
.....	J			04-119	TF	.....			
TO DISTRIBUTING FRAME	NC 1AT31L00 NC		P303	054 055 056	1AT31L00	04-114 CP	352	V	108
.....	J			04-126	TF	.....			
TO DISTRIBUTING FRAME	NC 1AR31L01 NC		P306	054 055 056	1AR31L01	04-122 CP	252	V	108
.....	J			04-127	TF	.....			
TO DISTRIBUTING FRAME	NC 1AT31L01 NC		P306	054 055 056	1AT31L01	04-122 CP	352	V	108
.....	J			04-134	TF	.....			
TO DISTRIBUTING FRAME	NC 1AR31L02 NC		P309	054 055 056	1AR31L02	04-130 CP	252	V	108
.....	J			04-135	TF	.....			
TO DISTRIBUTING FRAME	NC 1AT31L02 NC		P309	054 055 056	1AT31L02	04-130 CP	352	V	108

COPYRIGHT (c) 1988 AT&T
ALL RIGHTS RESERVED

MODULAR METALLIC SERVICE UNIT

DWG SIZE	ISSUE
D2	6M

AT&T	SD-5D015-01	GB14

PRINTED IN U.S.A.

CAD 004

GROWTH UNIT FAN-OUTS

TO CONNECTION DESTINATION	TO CONNECTION LEAD DESIG	METHOD	WIRE SYM	TERMINAL	FROM CONNECTION LEAD DESIG	FROM CONNECTION TERMINATION	FROM CONNECTION TERMINAL	OPT	NOTE
	.....J			04-018	JACK/CP	.....			
	NC			236	GRD04018				
TO CONN CKT	0DRIN3			237	0DRIN3				
|	0WRITE3			238	0WRITE3				
|	0READ3			239	0READ3				
|	0SRVR024			240	0SRVR024				
|	0SRVR026			241	0SRVR026				
|	0SRVR028			242	0SRVR028				
|	0SRVR030			243	0SRVR030				
	NC			336	GRD04018				
TO CONN CKT	0DWOUT3			337	0DWOUT3				
	NC			338	GRD04018				
TO CONN CKT	0CLK03			339	0CLK03				
|	0SRVR025			340	0SRVR025				
|	0SRVR027			341	0SRVR027				
|	0SRVR029			342	0SRVR029				
|	0SRVR031			343	0SRVR031				
	.....J			04-018	JACK/CP	.....			
	NC			036	GRD04018				
TO CONN CKT	0DRIN1			037	0DRIN1				
|	0WRITE1			038	0WRITE1				
|	0READ1			039	0READ1				
|	0SRVR008			040	0SRVR008				
|	0SRVR010			041	0SRVR010				
|	0SRVR012			042	0SRVR012				
|	0SRVR014			043	0SRVR014				
	NC			136	GRD04018				
TO CONN CKT	0DWOUT1			137	0DWOUT1				
	NC			138	GRD04018				
TO CONN CKT	0CLK01			139	0CLK01				
|	0SRVR009			140	0SRVR009				
|	0SRVR011			141	0SRVR011				
|	0SRVR013			142	0SRVR013				
|	0SRVR015			143	0SRVR015				
	.....J			04-018	JACK/CP	.....			
	NC			213	GRD04018				
TO CONN CKT	0DRIN2			214	0DRIN2				
|	0WRITE2			215	0WRITE2				
|	0READ2			216	0READ2				
|	0SRVR016			217	0SRVR016				
|	0SRVR018			218	0SRVR018				
|	0SRVR020			219	0SRVR020				
|	0SRVR022			220	0SRVR022				
	NC			313	GRD04018				
TO CONN CKT	0DWOUT2			314	0DWOUT2				
	NC			315	GRD04018				
TO CONN CKT	0CLK02			316	0CLK02				
|	0SRVR017			317	0SRVR017				
|	0SRVR019			318	0SRVR019				
|	0SRVR021			319	0SRVR021				
|	0SRVR023			320	0SRVR023				
	.....J			04-018	JACK/CP	.....			
	NC			013	GRD04018				
	NC			014	0DRIN0				
	NC			015	0WRITE0				
	NC			016	0READ0				
TO CONN CKT	0SRVR000			017	0SRVR000				
|	0SRVR002			018	0SRVR002				
|	0SRVR004			019	0SRVR004				
|	0SRVR006			020	0SRVR006				
	NC			113	GRD04018				
	NC			114	0DWOUT0				
	NC			115	GRD04018				
	NC			116	0CLK00				
TO CONN CKT	0SRVR001			117	0SRVR001				
|	0SRVR003			118	0SRVR003				
|	0SRVR005			119	0SRVR005				
|	0SRVR007			120	0SRVR007				
	.....J			04-018	JACK/CP	.....			
	NC			200	-48RTN01				
	NC			201	-48RTN01				
TO CONN CKT	0A0010	P014	202		0A0010				
|	0A1010	P015	203		0A1010				
|	0A2010	P016	204		0A2010				

CAD 004

(CONT'D)

TO CONNECTION DESTINATION	TO CONNECTION LEAD DESIG	METHOD	WIRE SYM	TERMINAL	FROM CONNECTION LEAD DESIG	FROM CONNECTION TERMINATION	FROM CONNECTION TERMINAL	OPT	NOTE
	.....J			04-018 (CONT'D)	JACK/CP	.....			
|	0A3010	P017	205		0A3010				
|	0A4010	P018	206		0A4010				
|	0A5010	P019	207		0A5010				
|	0A6010	P020	208		0A6010				
|	0A7010	P021	209		0A7010				
	NC	P022	210		GRD04018				
TO CONN CKT	0ASW10		211		0ASW10				
	NC		300		-48RTN01				
	NC		301		-48RTN01				
TO CONN CKT	0B0010	P014	302		0B0010				
|	0B1010	P015	303		0B1010				
|	0B2010	P016	304		0B2010				
|	0B3010	P017	305		0B3010				
|	0B4010	P018	306		0B4010				
|	0B5010	P019	307		0B5010				
|	0B6010	P020	308		0B6010				
|	0B7010	P021	309		0B7010				
|	0B8010	P022	310		0B8010				
|	0ASW11		311		0ASW11				
	.....J			04-018	JACK/CP	.....			
	NC		000		-48V01				
	NC		001		-48V01				
TO CONN CKT	0A0000	P002	002		0A0000				
|	0A1000	P003	003		0A1000				
|	0A2000	P004	004		0A2000				
|	0A3000	P005	005		0A3000				
|	0A4000	P006	006		0A4000				
|	0A5000	P007	007		0A5000				
|	0A6000	P008	008		0A6000				
|	0A7000	P009	009		0A7000				
	NC	P010	010		GRD04018				
TO CONN CKT	0ASW00		011		0ASW00				
	NC		100		-48V01				
	NC		101		-48V01				
TO CONN CKT	0B0000	P002	102		0B0000				
|	0B1000	P003	103		0B1000				
|	0B2000	P004	104		0B2000				
|	0B3000	P005	105		0B3000				
|	0B4000	P006	106		0B4000				
|	0B5000	P007	107		0B5000				
|	0B6000	P008	108		0B6000				
|	0B7000	P009	109		0B7000				
|	0B8000	P010	110		0B8000				
|	0ASW01		111		0ASW01				
	.....J			04-022	TF	.....			
TO CONN CKT	0A0020		013		0A0020	04-018	CP	021	
|	0A1020		014		0A1020	04-018	CP	022	
|	0A2020		015		0A2020	04-018	CP	023	
|	0A3020		016		0A3020	04-018	CP	024	
|	0A4020		017		0A4020	04-018	CP	032	
|	0A5020		018		0A5020	04-018	CP	221	
|	0A6020		019		0A6020	04-018	CP	222	
|	0A7020		020		0A7020	04-018	CP	223	
|	GRD04018		021		GRD04018	04-018	CP	010	
|	0ASW20		022		0ASW20	04-018	CP	232	
	NC		023						
	NC		024						
	.....J			04-022	TF	.....			
TO CONN CKT	0A0030		032		0A0030	04-018	CP	044	
|	0A1030		033		0A1030	04-018	CP	045	
|	0A2030		034		0A2030	04-018	CP	046	
|	0A3030		035		0A3030	04-018	CP	047	
|	0A4030		036		0A4030	04-018	CP	048	
|	0A5030		037		0A5030	04-018	CP	244	
|	0A6030		038		0A6030	04-018	CP	245	
|	0A7030		039		0A7030	04-018	CP	246	
|	GRD04018		040		GRD04018	04-018	CP	010	
|	0ASW30		041		0ASW30	04-018	CP	248	
	NC		042						
	NC		043						

CAD 004

(CONT'D)

TO CONNECTION DESTINATION	TO CONNECTION LEAD DESIG	METHOD	WIRE SYM	TERMINAL	FROM CONNECTION LEAD DESIG	FROM CONNECTION TERMINATION	FROM CONNECTION TERMINAL	OPT	NOTE
	.....J			04-023	TF	.....			
TO CONN CKT	0B0030			032	0B0030	04-018	CP	144	
|	0B1030			033	0B1030	04-018	CP	145	
|	0B2030			034	0B2C30	04-018	CP	146	
|	0B3030			035	0B3030	04-018	CP	147	
|	0B4030			036	0B4030	04-018	CP	148	
|	0B5030			037	0B5030	04-018	CP	344	
|	0B6030			038	0B6030	04-018	CP	345	
|	0B7030			039	0B7030	04-018	CP	346	
|	0B8030			040	0B8030	04-018	CP	347	
|	0ASW31			041	0ASW31	04-018	CP	348	
	NC			042					
	NC			043					
	.....J			04-023	TF	.....			
TO CONN CKT	0B0020			013	0B0020	04-018	CP	121	
|	0B1020			014	0B1020	04-018	CP	122	
|	0B2020			015	0B2020	04-018	CP	123	
|	0B3020			016	0B3020	04-018	CP	124	
|	0B4020			017	0B4020	04-018	CP	132	
|	0B5020			018	0B5020	04-018	CP	321	
|	0B6020			019	0B6020	04-018	CP	322	
|	0B7020			020	0B7020	04-018	CP	323	
|	0B8020			021	0B8020	04-018	CP	324	
|	0ASW21			022	0ASW21	04-018	CP	332	
	NC			023					
	NC			024					
	.....J			04-106	JACK/CP	.....			
	NC			000	-48V11				
	NC			001	-48V11				
TO CONN CKT	1A0000			002	1A0000				
|	1A1000			003	1A1000				
|	1A2000			004	1A2000				
|	1A3000			005	1A3000				
|	1A4000			006	1A4000				
|	1A5000			007	1A5000				
|	1A6000			008	1A6000				
|	1A7000			009	1A7000				
	NC			010	GRD04106				
TO CONN CKT	1ASW00			011	1ASW00				
	NC			100	-48V11				
	NC			101	-48V11				
TO CONN CKT	1B0000			102	1B0000				
|	1B1000			103	1B1000				
|	1B2000			104	1B2000				
|	1B3000			105	1B3000				
|	1B4000			106	1B4000				
|	1B5000			107	1B5000				
|	1B6000			108	1B6000				
|	1B7000			109	1B7000				
|	1B8000			110	1B8000				
|	1ASW01			111	1ASW01				

SEE PROPRIETARY NOTICE ON COVER SHEET

MODULAR METALLIC SERVICE UNIT	DWG SIZE: C2	ISSUE: 2D
AT&T BELL LABORATORIES	SD-5D015-01	GB15

PRINTED IN U. S. A. 12/14/84

CAD 004
(CONT'D)

TO CONNECTION					FROM CONNECTION				
DESTINATION	LEAD DESIG	METHOD	WIRE SYM	TERMINAL	LEAD DESIG	TERMINATION	TERMINAL	OPT	NOTE
.....J				04-106	JACK/CP				
	NC			200	-48RTN11				
	NC			201	-48RTN11				
TO CONN CKT	1A0010			202	1A0010				
|	1A1010			203	1A1010				
|	1A2010			204	1A2010				
|	1A3010			205	1A3010				
|	1A4010			206	1A4010				
|	1A5010			207	1A5010				
|	1A6010			208	1A6010				
|	1A7010			209	1A7010				
	NC			210	GRD04106				
TO CONN CKT	1ASW10			211	1ASW10				
	NC			300	-48RTN11				
	NC			301	-48RTN11				
TO CONN CKT	1B0010			302	1B0010				
|	1B1010			303	1B1010				
|	1B2010			304	1B2010				
|	1B3010			305	1B3010				
|	1B4010			306	1B4010				
|	1B5010			307	1B5010				
|	1B6010			308	1B6010				
|	1B7010			309	1B7010				
|	1B8010			310	1B8010				
|	1ASW11			311	1ASW11				
.....J				04-106	JACK/CP				
	NC			013	GRD04106				
	NC			014	1DRIN0				
	NC			015	1WRITE0				
	NC			016	1READ0				
TO CONN CKT	1SRVR000			017	1SRVR000				
|	1SRVR002			018	1SRVR002				
|	1SRVR004			019	1SRVR004				
|	1SRVR006			020	1SRVR006				
	NC			113	GRD04106				
	NC			114	1DWOUT0				
	NC			115	GRD04106				
	NC			116	1CLK00				
TO CONN CKT	1SRVR001			117	1SRVR001				
|	1SRVR003			118	1SRVR003				
|	1SRVR005			119	1SRVR005				
|	1SRVR007			120	1SRVR007				
.....J				04-106	JACK/CP				
	NC			213	GRD04106				
TO CONN CKT	1DRIN2			214	1DRIN2				
|	1WRITE2			215	1WRITE2				
|	1READ2			216	1READ2				
|	1SRVR016			217	1SRVR016				
|	1SRVR018			218	1SRVR018				
|	1SRVR020			219	1SRVR020				
|	1SRVR022			220	1SRVR022				
	NC			313	GRD04106				
TO CONN CKT	1DWOUT2			314	1DWOUT2				
	NC			315	GRD04106				
TO CONN CKT	1CLK02			316	1CLK02				
|	1SRVR017			317	1SRVR017				
|	1SRVR019			318	1SRVR019				
|	1SRVR021			319	1SRVR021				
|	1SRVR023			320	1SRVR023				
.....J				04-106	JACK/CP				
	NC			036	GRD04106				
TO CONN CKT	1DRIN1			037	1DRIN1				
|	1WRITE1			038	1WRITE1				
|	1READ1			039	1READ1				
|	1SRVR008			040	1SRVR008				
|	1SRVR010			041	1SRVR010				
|	1SRVR012			042	1SRVR012				
|	1SRVR014			043	1SRVR014				
	NC			136	GRD04106				
TO CONN CKT	1DWOUT1			137	1DWOUT1				
	NC			138	GRD04106				
TO CONN CKT	1CLK01			139	1CLK01				
|	1SRVR009			140	1SRVR009				
|	1SRVR011			141	1SRVR011				
|	1SRVR013			142	1SRVR013				
|	1SRVR015			143	1SRVR015				

CAD 004
(CONT'D)

TO CONNECTION					FROM CONNECTION				
DESTINATION	LEAD DESIG	METHOD	WIRE SYM	TERMINAL	LEAD DESIG	TERMINATION	TERMINAL	OPT	NOTE
.....J				04-106	JACK/CP				
	NC			236	GRD04106				
TO CONN CKT	1DRIN3			237	1DRIN3				
|	1WRITE3			238	1WRITE3				
|	1READ3			239	1READ3				
|	1SRVR024			240	1SRVR024				
|	1SRVR026			241	1SRVR026				
|	1SRVR028			242	1SRVR028				
|	1SRVR030			243	1SRVR030				
	NC			336	GRD04106				
TO CONN CKT	1DWOUT3			337	1DWOUT3				
	NC			338	GRD04106				
TO CONN CKT	1CLK03			339	1CLK03				
|	1SRVR025			340	1SRVR025				
|	1SRVR027			341	1SRVR027				
|	1SRVR029			342	1SRVR029				
|	1SRVR031			343	1SRVR031				
.....J				04-110	TF				
TO CONN CKT	1A0030			032	1A0030	04-106	CP	044	
|	1A1030			033	1A1030	04-106	CP	045	
|	1A2030			034	1A2030	04-106	CP	046	
|	1A3030			035	1A3030	04-106	CP	047	
|	1A4030			036	1A4030	04-106	CP	048	
|	1A5030			037	1A5030	04-106	CP	244	
|	1A6030			038	1A6030	04-106	CP	245	
|	1A7030			039	1A7030	04-106	CP	246	
|	GRD04106			040	GRD04106	04-106	CP	033	
|	1ASW30			041	1ASW30	04-106	CP	248	
	NC			042					
	NC			043					
.....J				04-110	TF				
TO CONN CKT	1A0020			013	1A0020	04-106	CP	021	
|	1A1020			014	1A1020	04-106	CP	022	
|	1A2020			015	1A2020	04-106	CP	023	
|	1A3020			016	1A3020	04-106	CP	024	
|	1A4020			017	1A4020	04-106	CP	032	
|	1A5020			018	1A5020	04-106	CP	221	
|	1A6020			019	1A6020	04-106	CP	222	
|	1A7020			020	1A7020	04-106	CP	223	
|	GRD04106			021	GRD04106	04-106	CP	033	
|	1ASW20			022	1ASW20	04-106	CP	232	
	NC			023					
	NC			024					
.....J				04-111	TF				
TO CONN CKT	1B0030			032	1B0030	04-106	CP	144	
|	1B1030			033	1B1030	04-106	CP	145	
|	1B2030			034	1B2030	04-106	CP	146	
|	1B3030			035	1B3030	04-106	CP	147	
|	1B4030			036	1B4030	04-106	CP	148	
|	1B5030			037	1B5030	04-106	CP	344	
|	1B6030			038	1B6030	04-106	CP	345	
|	1B7030			039	1B7030	04-106	CP	346	
|	1B8030			040	1B8030	04-106	CP	347	
|	1ASW31			041	1ASW31	04-106	CP	348	
	NC			042					
	NC			043					
.....J				04-111	TF				
TO CONN CKT	1B0020			013	1B0020	04-106	CP	121	
|	1B1020			014	1B1020	04-106	CP	122	
|	1B2020			015	1B2020	04-106	CP	123	
|	1B3020			016	1B3020	04-106	CP	124	
|	1B4020			017	1B4020	04-106	CP	132	
|	1B5020			018	1B5020	04-106	CP	321	
|	1B6020			019	1B6020	04-106	CP	322	
|	1B7020			020	1B7020	04-106	CP	323	
|	1B8020			021	1B8020	04-106	CP	324	
|	1ASW21			022	1ASW21	04-106	CP	332	
	NC			023					
	NC			024					

CAD 005
TIP AND RING

TO CONNECTION					FROM CONNECTION				
DESTINATION	LEAD DESIG	METHOD	WIRE SYM	TERMINAL	LEAD DESIG	TERMINATION	TERMINAL	OPT	NOTE
..... J				04-026	JACK/CP				
	NC			000	-48V01				
	NC			001	-48V01				
	NC			002					
	NC			003					
TO DISTRIBUTING	0AR00L00	P004	004		0AR00L00				
FRAME	0AR01L00	P005	005		0AR01L00				
|	0AR02L00	P006	006		0AR02L00				
|	0AR03L00	P007	007		0AR03L00				
|	0AR04L00	P008	008		0AR04L00				
|	0AR05L00	P009	009		0AR05L00				
|	0AR06L00	P010	010		0AR06L00				
|	0AR07L00	P011	011		0AR07L00				
	NC			100	-48V01				
	NC			101	-48V01				
	NC			102					
	NC			103					
TO DISTRIBUTING	0AT00L00	P004	104		0AT00L00				
FRAME	0AT01L00	P005	105		0AT01L00				
|	0AT02L00	P006	106		0AT02L00				
|	0AT03L00	P007	107		0AT03L00				
|	0AT04L00	P008	108		0AT04L00				
|	0AT05L00	P009	109		0AT05L00				
|	0AT06L00	P010	110		0AT06L00				
|	0AT07L00	P011	111		0AT07L00				
..... J				04-026	JACK/CP				
	NC			200	-48RTN01				
	NC			201	-48RTN01				
	NC	P014	202		0JR00				
	NC	P015	203		0JR01				
TO DISTRIBUTING	0AR16L00	P016	204		0AR16L00				
FRAME	0AR17L00	P017	205		0AR17L00				
|	0AR18L00	P018	206		0AR18L00				
|	0AR19L00	P019	207		0AR19L00				
|	0AR20L00	P020	208		0AR20L00				
|	0AR21L00	P021	209		0AR21L00				
|	0AR22L00	P022	210		0AR22L00				
|	0AR23L00	P023	211		0AR23L00				
	NC			300	-48RTN01				
	NC			301	-48RTN01				
	NC	P014	302		0JT00				
	NC	P015	303		0JT01				
TO DISTRIBUTING	0AT16L00	P016	304		0AT16L00				
FRAME	0AT17L00	P017	305		0AT17L00				
|	0AT18L00	P018	306		0AT18L00				
|	0AT19L00	P019	307		0AT19L00				
|	0AT20L00	P020	308		0AT20L00				
|	0AT21L00	P021	309		0AT21L00				
|	0AT22L00	P022	310		0AT22L00				
|	0AT23L00	P023	311		0AT23L00				

SEE PROPRIETARY NOTICE ON COVER SHEET

MODULAR METALLIC SERVICE UNIT

DWG SIZE: D2

ISSUE: 2D

AT&T BELL LABORATORIES

SD-5D015-01

GB16

PRINTED IN U. S. A.

12/14/84

CAD 005
(CONT'D)

TO CONNECTION					FROM CONNECTION				
DESTINATION	LEAD DESIG	METHOD	WIRE SYM	TERMINAL	LEAD DESIG	TERMINATION	TERMINAL	OPT	NOTE
.....J				04-026	JACK/CP	.....			
TO DISTRIBUTING FRAME	0AR08L00		P024	045	0AR08L00				
|	0AR09L00		P025	046	0AR09L00				
|	0AR10L00		P026	047	0AR10L00				
|	0AR11L00		P027	048	0AR11L00				
|	0AR12L00		P028	049	0AR12L00				
|	0AR13L00		P029	050	0AR13L00				
|	0AR14L00		P030	051	0AR14L00				
|	0AR15L00		P031	052	0AR15L00				
	NC			053	0WG1L0				
	NC			054	0B0000				
	NC			055	0WG1L0				
	NC			056	0EARTHG				
TO DISTRIBUTING FRAME	0AT08L00		P024	145	0AT08L00				
|	0AT09L00		P025	146	0AT09L00				
|	0AT10L00		P026	147	0AT10L00				
|	0AT11L00		P027	148	0AT11L00				
|	0AT12L00		P028	149	0AT12L00				
|	0AT13L00		P029	150	0AT13L00				
|	0AT14L00		P030	151	0AT14L00				
|	0AT15L00		P031	152	0AT15L00				
	NC			153	0WG2L0				
	NC			154	0B0000				
	NC			155	0WG2L0				
	NC			156	0EARTHG				
.....J				04-026	JACK/CP	.....			
TO DISTRIBUTING FRAME	0AR24L00		P036	245	0AR24L00				
|	0AR25L00		P037	246	0AR25L00				
|	0AR26L00		P038	247	0AR26L00				
|	0AR27L00		P039	248	0AR27L00				
|	0AR28L00		P040	249	0AR28L00				
|	0AR29L00		P041	250	0AR29L00				
|	0AR30L00		P042	251	0AR30L00				
|	0AR31L00		P043	252	0AR31L00			V	108
	NC			253	0WG3L0				
	NC			254	0B0000				
	NC			255	0WG3L0				
	NC			256	0EARTHG				
TO DISTRIBUTING FRAME	0AT24L00		P036	345	0AT24L00				
|	0AT25L00		P037	346	0AT25L00				
|	0AT26L00		P038	347	0AT26L00				
|	0AT27L00		P039	348	0AT27L00				
|	0AT28L00		P040	349	0AT28L00				
|	0AT29L00		P041	350	0AT29L00				
|	0AT30L00		P042	351	0AT30L00				
|	0AT31L00		P043	352	0AT31L00			V	108
	NC			353	0WG4L0				
	NC			354					
	NC			355	0WG4L0				
	NC			356	0EARTHG				
.....J				04-034	JACK/CP	.....			
	NC			000	-48V01				
	NC			001	-48V01				
	NC			002					
	NC			003					
TO DISTRIBUTING FRAME	0AR00L01		P052	004	0AR00L01				
|	0AR01L01		P053	005	0AP01L01				
|	0AR02L01		P054	006	0AR02L01				
|	0AR03L01		P055	007	0AR03L01				
|	0AR04L01		P056	008	0AR04L01				
|	0AR05L01		P057	009	0AR05L01				
|	0AR06L01		P058	010	0AR06L01				
|	0AR07L01		P059	011	0AR07L01				
	NC			100	-48V01				
	NC			101	-48V01				
	NC			102					
	NC			103					
TO DISTRIBUTING FRAME	0AT00L01		P052	104	0AT00L01				
|	0AT01L01		P053	105	0AT01L01				
|	0AT02L01		P054	106	0AT02L01				
|	0AT03L01		P055	107	0AT03L01				
|	0AT04L01		P056	108	0AT04L01				
|	0AT05L01		P057	109	0AT05L01				
|	0AT06L01		P058	110	0AT06L01				
|	0AT07L01		P059	111	0AT07L01				

CAD 005
(CONT'D)

TO CONNECTION					FROM CONNECTION				
DESTINATION	LEAD DESIG	METHOD	WIRE SYM	TERMINAL	LEAD DESIG	TERMINATION	TERMINAL	OPT	NOTE
.....J				04-034	JACK/CP	.....			
	NC			200	-48RTN01				
	NC			201	-48RTN01				
	NC		P062	202	0JR00				
	NC		P063	203	0JR01				
TO DISTRIBUTING FRAME	0AR16L01		P064	204	0AR16L01				
|	0AR17L01		P065	205	0AR17L01				
|	0AR18L01		P066	206	0AR18L01				
|	0AR19L01		P067	207	0AR19L01				
|	0AR20L01		P068	208	0AR20L01				
|	0AR21L01		P069	209	0AR21L01				
|	0AR22L01		P070	210	0AR22L01				
|	0AR23L01		P071	211	0AR23L01				
	NC			300	-48RTN01				
	NC			301	-48RTN01				
	NC		P062	302	0JT00				
	NC		P063	303	0JT01				
TO DISTRIBUTING FRAME	0AT16L01		P064	304	0AT16L01				
|	0AT17L01		P065	305	0AT17L01				
|	0AT18L01		P066	306	0AT18L01				
|	0AT19L01		P067	307	0AT19L01				
|	0AT20L01		P068	308	0AT20L01				
|	0AT21L01		P069	309	0AT21L01				
|	0AT22L01		P070	310	0AT22L01				
|	0AT23L01		P071	311	0AT23L01				
.....J				04-034	JACK/CP	.....			
TO DISTRIBUTING FRAME	0AR08L01		P072	045	0AR08L01				
|	0AR09L01		P073	046	0AR09L01				
|	0AR10L01		P074	047	0AR10L01				
|	0AR11L01		P075	048	0AR11L01				
|	0AR12L01		P076	049	0AR12L01				
|	0AR13L01		P077	050	0AR13L01				
|	0AR14L01		P078	051	0AR14L01				
|	0AR15L01		P079	052	0AR15L01				
	NC			053	0WG1L0				
	NC			054	0B1000				
	NC			055	0WG1L0				
	NC			056	0EARTHG				
TO DISTRIBUTING FRAME	0AT08L01		P072	145	0AT08L01				
|	0AT09L01		P073	146	0AT09L01				
|	0AT10L01		P074	147	0AT10L01				
|	0AT11L01		P075	148	0AT11L01				
|	0AT12L01		P076	149	0AT12L01				
|	0AT13L01		P077	150	0AT13L01				
|	0AT14L01		P078	151	0AT14L01				
|	0AT15L01		P079	152	0AT15L01				
	NC			153	0WG2L0				
	NC			154	0B1000				
	NC			155	0WG2L0				
	NC			156	0EARTHG				
.....J				04-034	JACK/CP	.....			
TO DISTRIBUTING FRAME	0AR24L01		P084	245	0AR24L01				
|	0AR25L01		P085	246	0AR25L01				
|	0AR26L01		P086	247	0AR26L01				
|	0AR27L01		P087	248	0AR27L01				
|	0AR28L01		P088	249	0AR28L01				
|	0AR29L01		P089	250	0AR29L01				
|	0AR30L01		P090	251	0AR30L01				
|	0AR31L01		P091	252	0AR31L01			V	108
	NC			253	0WG3L0				
	NC			254	0B1000				
	NC			255	0WG3L0				
	NC			256	0EARTHG				
TO DISTRIBUTING FRAME	0AT24L01		P084	345	0AT24L01				
|	0AT25L01		P085	346	0AT25L01				
|	0AT26L01		P086	347	0AT26L01				
|	0AT27L01		P087	348	0AT27L01				
|	0AT28L01		P088	349	0AT28L01				
|	0AT29L01		P089	350	0AT29L01				
|	0AT30L01		P090	351	0AT30L01				
|	0AT31L01		P091	352	0AT31L01			V	108
	NC			353	0WG4L0				
	NC			354					
	NC			355	0WG4L0				
	NC			356	0EARTHG				

CAD 005
(CONT'D)

TO CONNECTION					FROM CONNECTION				
DESTINATION	LEAD DESIG	METHOD	WIRE SYM	TERMINAL	LEAD DESIG	TERMINATION	TERMINAL	OPT	NOTE
.....J				04-042	JACK/CP	.....			
	NC			000	-48V01				
	NC			001	-48V01				
	NC			002					
	NC			003					
TO DISTRIBUTING FRAME	0AR00L02		P100	004	0AR00L02				
|	0AR01L02		P101	005	0AR01L02				
|	0AR02L02		P102	006	0AR02L02				
|	0AR03L02		P103	007	0AR03L02				
|	0AR04L02		P104	008	0AR04L02				
|	0AR05L02		P105	009	0AR05L02				
|	0AR06L02		P106	010	0AR06L02				
|	0AR07L02		P107	011	0AR07L02				
	NC			100	-48V01				
	NC			101	-48V01				
	NC			102					
	NC			103					
TO DISTRIBUTING FRAME	0AT00L02		P100	104	0AT00L02				
|	0AT01L02		P101	105	0AT01L02				
|	0AT02L02		P102	106	0AT02L02				
|	0AT03L02		P103	107	0AT03L02				
|	0AT04L02		P104	108	0AT04L02				
|	0AT05L02		P105	109	0AT05L02				
|	0AT06L02		P106	110	0AT06L02				
|	0AT07L02		P107	111	0AT07L02				
.....J				04-042	JACK/CP	.....			
	NC			200	-48RTN01				
	NC			201	-48RTN01				
	NC		P110	202	0JR00				
	NC		P111	203	0JR01				
TO DISTRIBUTING FRAME	0AR16L02		P112	204	0AR16L02				
|	0AR17L02		P113	205	0AR17L02				
|	0AR18L02		P114	206	0AR18L02				
|	0AR19L02		P115	207	0AR19L02				
|	0AR20L02		P116	208	0AR20L02				
|	0AR21L02		P117	209	0AR21L02				
|	0AR22L02		P118	210	0AR22L02				
|	0AR23L02		P119	211	0AR23L02				
	NC			300	-48RTN01				
	NC			301	-48RTN01				
	NC		P110	302	0JT00				
	NC		P111	303	0JT01				
TO DISTRIBUTING FRAME	0AT16L02		P112	304	0AT16L02				
|	0AT17L02		P113	305	0AT17L02				
|	0AT18L02		P114	306	0AT18L02				
|	0AT19L02		P115	307	0AT19L02				
|	0AT20L02		P116	308	0AT20L02				
|	0AT21L02		P117	309	0AT21L02				
|	0AT22L02		P118	310	0AT22L02				
|	0AT23L02		P119	311	0AT23L02				

COPYRIGHT (c) 1988 AT&T
ALL RIGHTS RESERVED

MODULAR METALLIC SERVICE UNIT

DWG SIZE D2 | ISSUE 6M

AT&T | SD-5D015-01 | GB17

PRINTED IN U.S.A.

CAD 005
(CONT'D)

TO CONNECTION					FROM CONNECTION				
DESTINATION	LEAD DESIG	METHOD	WIRE SYM	TERMINAL	LEAD DESIG	TERMINATION	TERMINAL	OPT	NOTE
.....J				04-042	JACK/CP				
TO DISTRIBUTING FRAME	0AR08L02		P120	045	0AR08L02				
|	0AR09L02		P121	046	0AR09L02				
|	0AR10L02		P122	047	0AR10L02				
|	0AR11L02		P123	048	0AR11L02				
|	0AR12L02		P124	049	0AR12L02				
|	0AR13L02		P125	050	0AR13L02				
|	0AR14L02		P126	051	0AR14L02				
|	0AR15L02		P127	052	0AR15L02				
	NC			053	0WG1L0				
	NC			054	0B2000				
	NC			055	0WG1L0				
	NC			056	0EARTHG				
TO DISTRIBUTING FRAME	0AT08L02		P120	145	0AT08L02				
	0AT09L02		P121	146	0AT09L02				
|	0AT10L02		P122	147	0AT10L02				
|	0AT11L02		P123	148	0AT11L02				
|	0AT12L02		P124	149	0AT12L02				
|	0AT13L02		P125	150	0AT13L02				
|	0AT14L02		P126	151	0AT14L02				
|	0AT15L02		P127	152	0AT15L02				
	NC			153	0WG2L0				
	NC			154	0B2000				
	NC			155	0WG2L0				
	NC			156	0EARTHG				
.....J				04-042	JACK/CP				
TO DISTRIBUTING FRAME	0AR24L02		P132	245	0AR24L02				
	0AR25L02		P133	246	0AR25L02				
|	0AR26L02		P134	247	0AR26L02				
|	0AR27L02		P135	248	0AR27L02				
|	0AR28L02		P136	249	0AR28L02				
|	0AR29L02		P137	250	0AR29L02				
|	0AR30L02		P138	251	0AR30L02				
|	0AR31L02		P139	252	0AR31L02			V	108
	NC			253	0WG3L0				
	NC			254	0B2000				
	NC			255	0WG3L0				
	NC			256	0EARTHG				
TO DISTRIBUTING FRAME	0AT24L02		P132	345	0AT24L02				
	0AT25L02		P133	346	0AT25L02				
|	0AT26L02		P134	347	0AT26L02				
|	0AT27L02		P135	348	0AT27L02				
|	0AT28L02		P136	349	0AT28L02				
|	0AT29L02		P137	350	0AT29L02				
|	0AT30L02		P138	351	0AT30L02				
|	0AT31L02		P139	352	0AT31L02			V	108
	NC			353	0WG4L0				
	NC			354					
	NC			355	0WG4L0				
	NC			356	0EARTHG				
.....J				04-050	JACK/CP				
	NC			000	-48V01				
	NC			001	-48V01				
	NC			002					
	NC			003					
TO DISTRIBUTING FRAME	0AR00L03		P148	004	0AR00L03				
	0AR01L03		P149	005	0AR01L03				
|	0AR02L03		P150	006	0AR02L03				
|	0AR03L03		P151	007	0AR03L03				
|	0AR04L03		P152	008	0AR04L03				
|	0AR05L03		P153	009	0AR05L03				
|	0AR06L03		P154	010	0AR06L03				
|	0AR07L03		P155	011	0AR07L03				
	NC			100	-48V01				
	NC			101	-48V01				
	NC			102					
	NC			103					
TO DISTRIBUTING FRAME	0AT00L03		P148	104	0AT00L03				
	0AT01L03		P149	105	0AT01L03				
|	0AT02L03		P150	106	0AT02L03				
|	0AT03L03		P151	107	0AT03L03				
|	0AT04L03		P152	108	0AT04L03				
|	0AT05L03		P153	109	0AT05L03				
|	0AT06L03		P154	110	0AT06L03				
|	0AT07L03		P155	111	0AT07L03				

CAD 005
(CONT'D)

TO CONNECTION					FROM CONNECTION				
DESTINATION	LEAD DESIG	METHOD	WIRE SYM	TERMINAL	LEAD DESIG	TERMINATION	TERMINAL	OPT	NOTE
.....J				04-050	JACK/CP				
	NC			200	-48RTN01				
	NC			201	-48RTN01				
	NC		P158	202	0JR00				
	NC		P159	203	0JR01				
TO DISTRIBUTING FRAME	0AR16L03		P160	204	0AR16L03				
	0AR17L03		P161	205	0AR17L03				
|	0AR18L03		P162	206	0AR18L03				
|	0AR19L03		P163	207	0AR19L03				
|	0AR20L03		P164	208	0AR20L03				
|	0AR21L03		P165	209	0AR21L03				
|	0AR22L03		P166	210	0AR22L03				
|	0AR23L03		P167	211	0AR23L03				
	NC			300	-48RTN01				
	NC			301	-48RTN01				
	NC		P158	302	0JT00				
	NC		P159	303	0JT01				
TO DISTRIBUTING FRAME	0AT16L03		P160	304	0AT16L03				
	0AT17L03		P161	305	0AT17L03				
|	0AT18L03		P162	306	0AT18L03				
|	0AT19L03		P163	307	0AT19L03				
|	0AT20L03		P164	308	0AT20L03				
|	0AT21L03		P165	309	0AT21L03				
|	0AT22L03		P166	310	0AT22L03				
|	0AT23L03		P167	311	0AT23L03				
.....J				04-050	JACK/CP				
TO DISTRIBUTING FRAME	0AR08L03		P168	045	0AR08L03				
	0AR09L03		P169	046	0AR09L03				
|	0AR10L03		P170	047	0AR10L03				
|	0AR11L03		P171	048	0AR11L03				
|	0AR12L03		P172	049	0AR12L03				
|	0AR13L03		P173	050	0AR13L03				
|	0AR14L03		P174	051	0AR14L03				
|	0AR15L03		P175	052	0AR15L03				
	NC			053	0WG1L0				
	NC			054	0B3000				
	NC			055	0WG1L0				
	NC			056	0EARTHG				
TO DISTRIBUTING FRAME	0AT08L03		P168	145	0AT08L03				
	0AT09L03		P169	146	0AT09L03				
|	0AT10L03		P170	147	0AT10L03				
|	0AT11L03		P171	148	0AT11L03				
|	0AT12L03		P172	149	0AT12L03				
|	0AT13L03		P173	150	0AT13L03				
|	0AT14L03		P174	151	0AT14L03				
|	0AT15L03		P175	152	0AT15L03				
	NC			153	0WG2L0				
	NC			154	0B3000				
	NC			155	0WG2L0				
	NC			156	0EARTHG				
.....J				04-050	JACK/CP				
TO DISTRIBUTING FRAME	0AR24L03		P180	245	0AR24L03				
	0AR25L03		P181	246	0AR25L03				
|	0AR26L03		P182	247	0AR26L03				
|	0AR27L03		P183	248	0AR27L03				
|	0AR28L03		P184	249	0AR28L03				
|	0AR29L03		P185	250	0AR29L03				
|	0AR30L03		P186	251	0AR30L03				
|	0AR31L03		P187	252	0AR31L03				
	NC			253	0WG3L0				
	NC			254	0B3000				
	NC			255	0WG3L0				
	NC			256	0EARTHG				
TO DISTRIBUTING FRAME	0AT24L03		P180	345	0AT24L03				
	0AT25L03		P181	346	0AT25L03				
|	0AT26L03		P182	347	0AT26L03				
|	0AT27L03		P183	348	0AT27L03				
|	0AT28L03		P184	349	0AT28L03				
|	0AT29L03		P185	350	0AT29L03				
|	0AT30L03		P186	351	0AT30L03				
|	0AT31L03		P187	352	0AT31L03				
	NC			353	0WG4L0				
	NC			354					
	NC			355	0WG4L0				
	NC			356	0EARTHG				

CAD 005
(CONT'D)

TO CONNECTION					FROM CONNECTION				
DESTINATION	LEAD DESIG	METHOD	WIRE SYM	TERMINAL	LEAD DESIG	TERMINATION	TERMINAL	OPT	NOTE
.....J				04-058	JACK/CP				
	NC			000	-48V01				
	NC			001	-48V01				
	NC			002					
	NC			003					
TO DISTRIBUTING FRAME	0AR00L04		P196	004	0AR00L04				
	0AR01L04		P197	005	0AR01L04				
|	0AR02L04		P198	006	0AR02L04				
|	0AR03L04		P199	007	0AR03L04				
|	0AR04L04		P200	008	0AR04L04				
|	0AR05L04		P201	009	0AR05L04				
|	0AR06L04		P202	010	0AR06L04				
|	0AR07L04		P203	011	0AR07L04				
	NC			100	-48V01				
	NC			101	-48V01				
	NC			102					
	NC			103					
TO DISTRIBUTING FRAME	0AT00L04		P196	104	0AT00L04				
	0AT01L04		P197	105	0AT01L04				
|	0AT02L04		P198	106	0AT02L04				
|	0AT03L04		P199	107	0AT03L04				
|	0AT04L04		P200	108	0AT04L04				
|	0AT05L04		P201	109	0AT05L04				
|	0AT06L04		P202	110	0AT06L04				
|	0AT07L04		P203	111	0AT07L04				
.....J				04-058	JACK/CP				
	NC			200	-48RTN01				
	NC			201	-48RTN01				
	NC		P206	202	0JR00				
	NC		P207	203	0JR01				
TO DISTRIBUTING FRAME	0AR16L04		P208	204	0AR16L04				
	0AR17L04		P209	205	0AR17L04				
|	0AR18L04		P210	206	0AR18L04				
|	0AR19L04		P211	207	0AR19L04				
|	0AR20L04		P212	208	0AR20L04				
|	0AR21L04		P213	209	0AR21L04				
|	0AR22L04		P214	210	0AR22L04				
|	0AR23L04		P215	211	0AR23L04				
	NC			300	-48RTN01				
	NC			301	-48RTN01				
	NC		P206	302	0JT00				
	NC		P207	303	0JT01				
TO DISTRIBUTING FRAME	0AT16L04		P208	304	0AT16L04				
	0AT17L04		P209	305	0AT17L04				
|	0AT18L04		P210	306	0AT18L04				
|	0AT19L04		P211	307	0AT19L04				
|	0AT20L04		P212	308	0AT20L04				
|	0AT21L04		P213	309	0AT21L04				
|	0AT22L04		P214	310	0AT22L04				
|	0AT23L04		P215	311	0AT23L04				

COPYRIGHT (C) 1988 AT&T
ALL RIGHTS RESERVED

MODULAR METALLIC SERVICE UNIT

DWG SIZE	ISSUE
C2	6M

AT&T	SD-5D015-01	GB18

PRINTED IN U.S.A.

CAD 005 (CONT'D)

TO CONNECTION					FROM CONNECTION				
DESTINATION	LEAD DESIG	METHOD	WIRE SYM	TERMINAL	LEAD DESIG	TERMINATION	TERMINAL	OPT	NOTE
.....J				04-058	JACK/CP				
TO DISTRIBUTING	0AR08L04		P216	045	0AR08L04				
FRAME	0AR09L04		P217	046	0AR09L04				
|	0AR10L04		P218	047	0AR10L04				
|	0AR11L04		P219	048	0AR11L04				
|	0AR12L04		P220	049	0AR12L04				
|	0AR13L04		P221	050	0AR13L04				
|	0AR14L04		P222	051	0AR14L04				
|	0AR15L04		P223	052	0AR15L04				
	NC			053	0WG1L0				
	NC			054	0B4000				
	NC			055	0WG1L0				
	NC			056	0EARTHG				
TO DISTRIBUTING	0AT08L04		P216	145	0AT08L04				
FRAME	0AT09L04		P217	146	0AT09L04				
|	0AT10L04		P218	147	0AT10L04				
|	0AT11L04		P219	148	0AT11L04				
|	0AT12L04		P220	149	0AT12L04				
|	0AT13L04		P221	150	0AT13L04				
|	0AT14L04		P222	151	0AT14L04				
|	0AT15L04		P223	152	0AT15L04				
	NC			153	0WG2L0				
	NC			154	0B4000				
	NC			155	0WG2L0				
	NC			156	0EARTHG				
.....J				04-058	JACK/CP				
TO DISTRIBUTING	0AR24L04		P228	245	0AR24L04				
FRAME	0AR25L04		P229	246	0AR25L04				
|	0AR26L04		P230	247	0AR26L04				
|	0AR27L04		P231	248	0AR27L04				
|	0AR28L04		P232	249	0AR28L04				
|	0AR29L04		P233	250	0AR29L04				
|	0AR30L04		P234	251	0AR30L04				
|	0AR31L04		P235	252	0AR31L04				
	NC			253	0WG3L0				
	NC			254	0B4000				
	NC			255	0WG3L0				
	NC			256	0EARTHG				
TO DISTRIBUTING	0AT24L04		P228	345	0AT24L04				
FRAME	0AT25L04		P229	346	0AT25L04				
|	0AT26L04		P230	347	0AT26L04				
|	0AT27L04		P231	348	0AT27L04				
|	0AT28L04		P232	349	0AT28L04				
|	0AT29L04		P233	350	0AT29L04				
|	0AT30L04		P234	351	0AT30L04				
|	0AT31L04		P235	352	0AT31L04				
	NC			353	0WG4L0				
	NC			354					
	NC			355	0WG4L0				
	NC			356	0EARTHG				
.....J				04-066	JACK/CP				
	NC			000	-48V01				
	NC			001	-48V01				
	NC			002					
	NC			003					
TO DISTRIBUTING	0AR00L05		P244	004	0AR00L05				
FRAME	0AR01L05		P245	005	0AR01L05				
|	0AR02L05		P246	006	0AR02L05				
|	0AR03L05		P247	007	0AR03L05				
|	0AR04L05		P248	008	0AR04L05				
|	0AR05L05		P249	009	0AR05L05				
|	0AR06L05		P250	010	0AR06L05				
|	0AR07L05		P251	011	0AR07L05				
	NC			100	-48V01				
	NC			101	-48V01				
	NC			102					
	NC			103					
TO DISTRIBUTING	0AT00L05		P244	104	0AT00L05				
FRAME	0AT01L05		P245	105	0AT01L05				
|	0AT02L05		P246	106	0AT02L05				
|	0AT03L05		P247	107	0AT03L05				
|	0AT04L05		P248	108	0AT04L05				
|	0AT05L05		P249	109	0AT05L05				
|	0AT06L05		P250	110	0AT06L05				
|	0AT07L05		P251	111	0AT07L05				

CAD 005 (CONT'D)

TO CONNECTION					FROM CONNECTION				
DESTINATION	LEAD DESIG	METHOD	WIRE SYM	TERMINAL	LEAD DESIG	TERMINATION	TERMINAL	OPT	NOTE
.....J				04-066	JACK/CP				
	NC			200	-48RTN01				
	NC			201	-48RTN01				
	NC		P254	202	0JR00				
	NC		P255	203	0JR01				
TO DISTRIBUTING	0AR16L05		P256	204	0AR16L05				
FRAME	0AR17L05		P257	205	0AR17L05				
|	0AR18L05		P258	206	0AR18L05				
|	0AR19L05		P259	207	0AR19L05				
|	0AR20L05		P260	208	0AR20L05				
|	0AR21L05		P261	209	0AR21L05				
|	0AR22L05		P262	210	0AR22L05				
|	0AR23L05		P263	211	0AR23L05				
	NC			300	-48RTN01				
	NC			301	-48RTN01				
	NC		P254	302	0JT00				
	NC		P255	303	0JT01				
TO DISTRIBUTING	0AT16L05		P256	304	0AT16L05				
FRAME	0AT17L05		P257	305	0A117L05				
|	0AT18L05		P258	306	0AT18L05				
|	0AT19L05		P259	307	0AT19L05				
|	0AT20L05		P260	308	0AT20L05				
|	0AT21L05		P261	309	0AT21L05				
|	0AT22L05		P262	310	0AT22L05				
|	0AT23L05		P263	311	0AT23L05				
.....J				04-066	JACK/CP				
TO DISTRIBUTING	0AR08L05		P264	045	0AR08L05				
FRAME	0AR09L05		P265	046	0AR09L05				
|	0AR10L05		P266	047	0AR10L05				
|	0AR11L05		P267	048	0AR11L05				
|	0AR12L05		P268	049	0AR12L05				
|	0AR13L05		P269	050	0AR13L05				
|	0AR14L05		P270	051	0AR14L05				
|	0AR15L05		P271	052	0AR15L05				
	NC			053	0WG1L0				
	NC			054	0B5000				
	NC			055	0WG1L0				
	NC			056	0EARTHG				
TO DISTRIBUTING	0AT08L05		P264	145	0AT08L05				
FRAME	0AT09L05		P265	146	0AT09L05				
|	0AT10L05		P266	147	0AT10L05				
|	0AT11L05		P267	148	0AT11L05				
|	0AT12L05		P268	149	0AT12L05				
|	0AT13L05		P269	150	0AT13L05				
|	0AT14L05		P270	151	0AT14L05				
|	0AT15L05		P271	152	0AT15L05				
	NC			153	0WG2L0				
	NC			154	0B5000				
	NC			155	0WG2L0				
	NC			156	0EARTHG				
.....J				04-066	JACK/CP				
TO DISTRIBUTING	0AR24L05		P276	245	0AR24L05				
FRAME	0AR25L05		P277	246	0AR25L05				
|	0AR26L05		P278	247	0AR26L05				
|	0AR27L05		P279	248	0AR27L05				
|	0AR28L05		P280	249	0AR28L05				
|	0AR29L05		P281	250	0AR29L05				
|	0AR30L05		P282	251	0AR30L05				
|	0AR31L05		P283	252	0AR31L05				
	NC			253	0WG3L0				
	NC			254	0B5000				
	NC			255	0WG3L0				
	NC			256	0EARTHG				
TO DISTRIBUTING	0AT24L05		P276	345	0AT24L05				
FRAME	0AT25L05		P277	346	0AT25L05				
|	0AT26L05		P278	347	0AT26L05				
|	0AT27L05		P279	348	0AT27L05				
|	0AT28L05		P280	349	0AT28L05				
|	0AT29L05		P281	350	0AT29L05				
|	0AT30L05		P282	351	0AT30L05				
|	0AT31L05		P283	352	0AT31L05				
	NC			353	0WG4L0				
	NC			354					
	NC			355	0WG4L0				
	NC			356	0EARTHG				

CAD 005 (CONT'D)

TO CONNECTION					FROM CONNECTION				
DESTINATION	LEAD DESIG	METHOD	WIRE SYM	TERMINAL	LEAD DESIG	TERMINATION	TERMINAL	OPT	NOTE
.....J				04-074	JACK/CP				
	NC			000	-48V01				
	NC			001	-48V01				
	NC			002					
	NC			003					
TO DISTRIBUTING	0AR00L06		P292	004	0AR00L06				
FRAME	0AR01L06		P293	005	0AR01L06				
|	0AR02L06		P294	006	0AR02L06				
|	0AR03L06		P295	007	0AR03L06				
|	0AR04L06		P296	008	0AR04L06				
|	0AR05L06		P297	009	0AR05L06				
|	0AR06L06		P298	010	0AR06L06				
|	0AR07L06		P299	011	0AR07L06				
	NC			100	-48V01				
	NC			101	-48V01				
	NC			102					
	NC			103					
TO DISTRIBUTING	0AT00L06		P292	104	0AT00L06				
FRAME	0AT01L06		P293	105	0AT01L06				
|	0AT02L06		P294	106	0AT02L06				
|	0AT03L06		P295	107	0AT03L06				
|	0AT04L06		P296	108	0AT04L06				
|	0AT05L06		P297	109	0AT05L06				
|	0AT06L06		P298	110	0AT06L06				
|	0AT07L06		P299	111	0AT07L06				
.....J				04-074	JACK/CP				
	NC			200	-48RTN01				
	NC			201	-48RTN01				
	NC		P302	202	0JR00				
	NC		P303	203	0JR01				
TO DISTRIBUTING	0AR16L06		P304	204	0AR16L06				
FRAME	0AR17L06		P305	205	0AR17L06				
|	0AR18L06		P306	206	0AR18L06				
|	0AR19L06		P307	207	0AR19L06				
|	0AR20L06		P308	208	0AR20L06				
|	0AR21L06		P309	209	0AR21L06				
|	0AR22L06		P310	210	0AR22L06				
|	0AR23L06		P311	211	0AR23L06				
	NC			300	-48RTN01				
	NC			301	-48RTN01				
	NC		P302	302	0JT00				
	NC		P303	303	0JT01				
TO DISTRIBUTING	0AT16L06		P304	304	0AT16L06				
FRAME	0AT17L06		P305	305	0AT17L06				
|	0AT18L06		P306	306	0AT18L06				
|	0AT19L06		P307	307	0AT19L06				
|	0AT20L06		P308	308	0AT20L06				
|	0AT21L06		P309	309	0AT21L06				
|	0AT22L06		P310	310	0AT22L06				
|	0AT23L06		P311	311	0AT23L06				

SEE PROPRIETARY NOTICE ON COVER SHEET

MODULAR METALLIC SERVICE UNIT

DWG SIZE: D

ISSUE: 2D

AT&T BELL LABORATORIES

SD-5D015-01

GB19

PRINTED IN U.S.A.

12/14/84

CAD 005 (CONT'D)

TO CONNECTION					FROM CONNECTION				
DESTINATION	LEAD DESIG	METHOD	WIRE SYM	TERMINAL	LEAD DESIG	TERMINATION	TERMINAL	OPT	NOTE
.....J				04-074	JACK/CP				
TO DISTRIBUTING FRAME	0AR08L06		P312	045	0AR08L06				
|	0AR09L06		P313	046	0AR09L06				
|	0AR10L06		P314	047	0AR10L06				
|	0AR11L06		P315	048	0AR11L06				
|	0AR12L06		P316	049	0AR12L06				
|	0AR13L06		P317	050	0AR13L06				
|	0AR14L06		P318	051	0AR14L06				
|	0AR15L06		P319	052	0AR15L06				
	NC			053	0WG1L0				
	NC			054	0B6000				
	NC			055	0WG1L0				
	NC			056	0EARTHG				
TO DISTRIBUTING FRAME	0AT08L06		P312	145	0AT08L06				
	0AT09L06		P313	146	0AT09L06				
|	0AT10L06		P314	147	0AT10L06				
|	0AT11L06		P315	148	0AT11L06				
|	0AT12L06		P316	149	0AT12L06				
|	0AT13L06		P317	150	0AT13L06				
|	0AT14L06		P318	151	0AT14L06				
|	0AT15L06		P319	152	0AT15L06				
	NC			153	0WG2L0				
	NC			154	0B6000				
	NC			155	0WG2L0				
	NC			156	0EARTHG				
.....J				04-074	JACK/CP				
TO DISTRIBUTING FRAME	0AR24L06		P324	245	0AR24L06				
	0AR25L06		P325	246	0AR25L06				
|	0AR26L06		P326	247	0AR26L06				
|	0AR27L06		P327	248	0AR27L06				
|	0AR28L06		P328	249	0AR28L06				
|	0AR29L06		P329	250	0AR29L06				
|	0AR30L06		P330	251	0AR30L06				
|	0AR31L06		P331	252	0AR31L06				
	NC			253	0WG3L0				
	NC			254	0B6000				
	NC			255	0WG3L0				
	NC			256	0EARTHG				
TO DISTRIBUTING FRAME	0AT24L06		P324	345	0AT24L06				
	0AT25L06		P325	346	0AT25L06				
|	0AT26L06		P326	347	0AT26L06				
|	0AT27L06		P327	348	0AT27L06				
|	0AT28L06		P328	349	0AT28L06				
|	0AT29L06		P329	350	0AT29L06				
|	0AT30L06		P330	351	0AT30L06				
|	0AT31L06		P331	352	0AT31L06				
	NC			353	0WG4L0				
	NC			354					
	NC			355	0WG4L0				
	NC			356	0EARTHG				
.....J				04-082	JACK/CP				
	NC			000	-48V01				
	NC			001	-48V01				
	NC			002					
	NC			003					
TO DISTRIBUTING FRAME	0AR00L07		P340	004	0AR00L07				
	0AR01L07		P341	005	0AR01L07				
|	0AR02L07		P342	006	0AR02L07				
|	0AR03L07		P343	007	0AR03L07				
|	0AR04L07		P344	008	0AR04L07				
|	0AR05L07		P345	009	0AR05L07				
|	0AR06L07		P346	010	0AR06L07				
|	0AR07L07		P347	011	0AR07L07				
	NC			100	-48V01				
	NC			101	-48V01				
	NC			102					
	NC			103					
TO DISTRIBUTING FRAME	0AT00L07		P340	104	0AT00L07				
	0AT01L07		P341	105	0AT01L07				
|	0AT02L07		P342	106	0AT02L07				
|	0AT03L07		P343	107	0AT03L07				
|	0AT04L07		P344	108	0AT04L07				
|	0AT05L07		P345	109	0AT05L07				
|	0AT06L07		P346	110	0AT06L07				
|	0AT07L07		P347	111	0AT07L07				

CAD 005 (CONT'D)

TO CONNECTION					FROM CONNECTION				
DESTINATION	LEAD DESIG	METHOD	WIRE SYM	TERMINAL	LEAD DESIG	TERMINATION	TERMINAL	OPT	NOTE
.....J				04-082	JACK/CP				
	NC			200	-48RTN01				
	NC			201	-48RTN01				
	NC		P350	202	0JR00				
	NC		P351	203	0JR01				
TO DISTRIBUTING FRAME	0AR16L07		P352	204	0AR16L07				
	0AR17L07		P353	205	0AR17L07				
|	0AR18L07		P354	206	0AR18L07				
|	0AR19L07		P355	207	0AR19L07				
|	0AR20L07		P356	208	0AR20L07				
|	0AR21L07		P357	209	0AR21L07				
|	0AR22L07		P358	210	0AR22L07				
|	0AR23L07		P359	211	0AR23L07				
	NC			300	-48RTN01				
	NC			301	-48RTN01				
	NC		P350	302	0JT00				
	NC		P351	303	0JT01				
TO DISTRIBUTING FRAME	0AT16L07		P352	304	0AT16L07				
	0AT17L07		P353	305	0AT17L07				
|	0AT18L07		P354	306	0AT18L07				
|	0AT19L07		P355	307	0AT19L07				
|	0AT20L07		P356	308	0AT20L07				
|	0AT21L07		P357	309	0AT21L07				
|	0AT22L07		P358	310	0AT22L07				
|	0AT23L07		P359	311	0AT23L07				
.....J				04-082	JACK/CP				
TO DISTRIBUTING FRAME	0AR08L07		P360	045	0AR08L07				
	0AR09L07		P361	046	0AR09L07				
|	0AR10L07		P362	047	0AR10L07				
|	0AR11L07		P363	048	0AR11L07				
|	0AR12L07		P364	049	0AR12L07				
|	0AR13L07		P365	050	0AR13L07				
|	0AR14L07		P366	051	0AR14L07				
|	0AR15L07		P367	052	0AR15L07				
	NC			053	0WG1L0				
	NC			054	0B7000				
	NC			055	0WG1L0				
	NC			056	0EARTHG				
TO DISTRIBUTING FRAME	0AT08L07		P360	145	0AT08L07				
	0AT09L07		P361	146	0AT09L07				
|	0AT10L07		P362	147	0AT10L07				
|	0AT11L07		P363	148	0AT11L07				
|	0AT12L07		P364	149	0AT12L07				
|	0AT13L07		P365	150	0AT13L07				
|	0AT14L07		P366	151	0AT14L07				
|	0AT15L07		P367	152	0AT15L07				
	NC			153	0WG2L0				
	NC			154	0B7000				
	NC			155	0WG2L0				
	NC			156	0EARTHG				
.....J				04-082	JACK/CP				
TO DISTRIBUTING FRAME	0AR24L07		P372	245	0AR24L07				
	0AR25L07		P373	246	0AR25L07				
|	0AR26L07		P374	247	0AR26L07				
|	0AR27L07		P375	248	0AR27L07				
|	0AR28L07		P376	249	0AR28L07				
|	0AR29L07		P377	250	0AR29L07				
|	0AR30L07		P378	251	0AR30L07				
|	0AR31L07		P379	252	0AR31L07				
	NC			253	0WG3L0				
	NC			254	0B7000				
	NC			255	0WG3L0				
	NC			256	0EARTHG				
TO DISTRIBUTING FRAME	0AT24L07		P372	345	0AT24L07				
	0AT25L07		P373	346	0AT25L07				
|	0AT26L07		P374	347	0AT26L07				
|	0AT27L07		P375	348	0AT27L07				
|	0AT28L07		P376	349	0AT28L07				
|	0AT29L07		P377	350	0AT29L07				
|	0AT30L07		P378	351	0AT30L07				
|	0AT31L07		P379	352	0AT31L07				
	NC			353	0WG4L0				
	NC			354					
	NC			355	0WG4L0				
	NC			356	0EARTHG				

CAD 005 (CONT'D)

TO CONNECTION					FROM CONNECTION				
DESTINATION	LEAD DESIG	METHOD	WIRE SYM	TERMINAL	LEAD DESIG	TERMINATION	TERMINAL	OPT	NOTE
.....J				04-114	JACK/CP				
	NC			000	-48V11				
	NC			001	-48V11				
	NC			002					
	NC			003					
TO DISTRIBUTING FRAME	1AR00L00		P388	004	1AR00L00				
	1AR01L00		P389	005	1AR01L00				
|	1AR02L00		P390	006	1AR02L00				
|	1AR03L00		P391	007	1AR03L00				
|	1AR04L00		P392	008	1AR04L00				
|	1AR05L00		P393	009	1AR05L00				
|	1AR06L00		P394	010	1AR06L00				
|	1AR07L00		P395	011	1AR07L00				
	NC			100	-48V11				
	NC			101	-48V11				
	NC			102					
	NC			103					
TO DISTRIBUTING FRAME	1AT00L00		P388	104	1AT00L00				
	1AT01L00		P389	105	1AT01L00				
|	1AT02L00		P390	106	1AT02L00				
|	1AT03L00		P391	107	1AT03L00				
|	1AT04L00		P392	108	1AT04L00				
|	1AT05L00		P393	109	1AT05L00				
|	1AT06L00		P394	110	1AT06L00				
|	1AT07L00		P395	111	1AT07L00				
.....J				04-114	JACK/CP				
	NC			200	-48RTN11				
	NC			201	-48RTN11				
	NC		P398	202	1JR00				
	NC		P399	203	1JR01				
TO DISTRIBUTING FRAME	1AR16L00		P400	204	1AR16L00				
	1AR17L00		P401	205	1AR17L00				
|	1AR18L00		P402	206	1AR18L00				
|	1AR19L00		P403	207	1AR19L00				
|	1AR20L00		P404	208	1AR20L00				
|	1AR21L00		P405	209	1AR21L00				
|	1AR22L00		P406	210	1AR22L00				
|	1AR23L00		P407	211	1AR23L00				
	NC			300	-48RTN11				
	NC			301	-48RTN11				
	NC		P398	302	1JT00				
	NC		P399	303	1JT01				
TO DISTRIBUTING FRAME	1AT16L00		P400	304	1AT16L00				
	1AT17L00		P401	305	1AT17L00				
|	1AT18L00		P402	306	1AT18L00				
|	1AT19L00		P403	307	1AT19L00				
|	1AT20L00		P404	308	1AT20L00				
|	1AT21L00		P405	309	1AT21L00				
|	1AT22L00		P406	310	1AT22L00				
|	1AT23L00		P407	311	1AT23L00				

SEE PROPRIETARY NOTICE ON COVER SHEET

MODULAR METALLIC SERVICE UNIT

DWG SIZE: C2

ISSUE: 2D

AT&T BELL LABORATORIES

SD-5D015-01

GB20

PRINTED IN U. S. A. 12/14/84

CAD 005 (CONT'D)

TO CONNECTION					FROM CONNECTION				
DESTINATION	LEAD DESIG	METHOD	WIRE SYM	TERMINAL	LEAD DESIG	TERMINATION	TERMINAL	OPT	NOTE
.....J				04-114	JACK/CP	.....			
TO DISTRIBUTING FRAME	1AR08L00	P408	045		1AR08L00				
|	1AR09L00	P409	046		1AR09L00				
|	1AR10L00	P410	047		1AR10L00				
|	1AR11L00	P411	048		1AR11L00				
|	1AR12L00	P412	049		1AR12L00				
|	1AR13L00	P413	050		1AR13L00				
|	1AR14L00	P414	051		1AR14L00				
|	1AR15L00	P415	052		1AR15L00				
	NC			053	1WG1L0				
	NC			054	1B0000				
	NC			055	1WG1L0				
	NC			056	1EARTHG				
TO DISTRIBUTING FRAME	1AT08L00	P408	145		1AT08L00				
|	1AT09L00	P409	146		1AT09L00				
|	1AT10L00	P410	147		1AT10L00				
|	1AT11L00	P411	148		1AT11L00				
|	1AT12L00	P412	149		1AT12L00				
|	1AT13L00	P413	150		1AT13L00				
|	1AT14L00	P414	151		1AT14L00				
|	1AT15L00	P415	152		1AT15L00				
	NC			153	1WG2L0				
	NC			154	1B0000				
	NC			155	1WG2L0				
	NC			156	1EARTHG				
.....J				04-114	JACK/CP	.....			
TO DISTRIBUTING FRAME	1AR24L00	P420	245		1AR24L00				
|	1AR25L00	P421	246		1AR25L00				
|	1AR26L00	P422	247		1AR26L00				
|	1AR27L00	P423	248		1AR27L00				
|	1AR28L00	P424	249		1AR28L00				
|	1AR29L00	P425	250		1AR29L00				
|	1AR30L00	P426	251		1AR30L00				
|	1AR31L00	P427	252		1AR31L00				
	NC			253	1WG3L0				
	NC			254	1B0000				
	NC			255	1WG3L0				
	NC			256	1EARTHG				
TO DISTRIBUTING FRAME	1AT24L00	P420	345		1AT24L00				
|	1AT25L00	P421	346		1AT25L00				
|	1AT26L00	P422	347		1AT26L00				
|	1AT27L00	P423	348		1AT27L00				
|	1AT28L00	P424	349		1AT28L00				
|	1AT29L00	P425	350		1AT29L00				
|	1AT30L00	P426	351		1AT30L00				
|	1AT31L00	P427	352		1AT31L00				
	NC			353	1WG4L0				
	NC			354					
	NC			355	1WG4L0				
	NC			356	1EARTHG				
.....J				04-122	JACK/CP	.....			
	NC			000	-48V11				
	NC			001	-48V11				
	NC			002					
	NC			003					
TO DISTRIBUTING FRAME	1AR00L01	P436	004		1AR00L01				
|	1AR01L01	P437	005		1AR01L01				
|	1AR02L01	P438	006		1AR02L01				
|	1AR03L01	P439	007		1AR03L01				
|	1AR04L01	P440	008		1AR04L01				
|	1AR05L01	P441	009		1AR05L01				
|	1AR06L01	P442	010		1AR06L01				
|	1AR07L01	P443	011		1AR07L01				
	NC			100	-48V11				
	NC			101	-48V11				
	NC			102					
	NC			103					
TO DISTRIBUTING FRAME	1AT00L01	P436	104		1AT00L01				
|	1AT01L01	P437	105		1AT01L01				
|	1AT02L01	P438	106		1AT02L01				
|	1AT03L01	P439	107		1AT03L01				
|	1AT04L01	P440	108		1AT04L01				
|	1AT05L01	P441	109		1AT05L01				
|	1AT06L01	P442	110		1AT06L01				
|	1AT07L01	P443	111		1AT07L01				

CAD 005 (CONT'D)

TO CONNECTION					FROM CONNECTION				
DESTINATION	LEAD DESIG	METHOD	WIRE SYM	TERMINAL	LEAD DESIG	TERMINATION	TERMINAL	OPT	NOTE
.....J				04-122	JACK/CP	.....			
	NC			200	-48RTN11				
	NC			201	-48RTN11				
	NC			202	1JR00				
	NC			203	1JR01				
TO DISTRIBUTING FRAME	1AR16L01	P448	204		1AR16L01				
|	1AR17L01	P449	205		1AR17L01				
|	1AR18L01	P450	206		1AR18L01				
|	1AR19L01	P451	207		1AR19L01				
|	1AR20L01	P452	208		1AR20L01				
|	1AR21L01	P453	209		1AR21L01				
|	1AR22L01	P454	210		1AR22L01				
|	1AR23L01	P455	211		1AR23L01				
	NC			300	-48RTN11				
	NC			301	-48RTN11				
	NC			302	1JT00				
	NC			303	1JT01				
TO DISTRIBUTING FRAME	1AT16L01	P448	304		1AT16L01				
|	1AT17L01	P449	305		1AT17L01				
|	1AT18L01	P450	306		1AT18L01				
|	1AT19L01	P451	307		1AT19L01				
|	1AT20L01	P452	308		1AT20L01				
|	1AT21L01	P453	309		1AT21L01				
|	1AT22L01	P454	310		1AT22L01				
|	1AT23L01	P455	311		1AT23L01				
.....J				04-122	JACK/CP	.....			
TO DISTRIBUTING FRAME	1AR08L01	P456	045		1AR08L01				
|	1AR09L01	P457	046		1AR09L01				
|	1AR10L01	P458	047		1AR10L01				
|	1AR11L01	P459	048		1AR11L01				
|	1AR12L01	P460	049		1AR12L01				
|	1AR13L01	P461	050		1AR13L01				
|	1AR14L01	P462	051		1AR14L01				
|	1AR15L01	P463	052		1AR15L01				
	NC			053	1WG1L0				
	NC			054	1B1000				
	NC			055	1WG1L0				
	NC			056	1EARTHG				
TO DISTRIBUTING FRAME	1AT08L01	P456	145		1AT08L01				
|	1AT09L01	P457	146		1AT09L01				
|	1AT10L01	P458	147		1AT10L01				
|	1AT11L01	P459	148		1AT11L01				
|	1AT12L01	P460	149		1AT12L01				
|	1AT13L01	P461	150		1AT13L01				
|	1AT14L01	P462	151		1AT14L01				
|	1AT15L01	P463	152		1AT15L01				
	NC			153	1WG2L0				
	NC			154	1B1000				
	NC			155	1WG2L0				
	NC			156	1EARTHG				
.....J				04-122	JACK/CP	.....			
TO DISTRIBUTING FRAME	1AR24L01	P468	245		1AR24L01				
|	1AR25L01	P469	246		1AR25L01				
|	1AR26L01	P470	247		1AR26L01				
|	1AR27L01	P471	248		1AR27L01				
|	1AR28L01	P472	249		1AR28L01				
|	1AR29L01	P473	250		1AR29L01				
|	1AR30L01	P474	251		1AR30L01				
|	1AR31L01	P475	252		1AR31L01				
	NC			253	1WG3L0				
	NC			254	1B1000				
	NC			255	1WG3L0				
	NC			256	1EARTHG				
TO DISTRIBUTING FRAME	1AT24L01	P468	345		1AT24L01				
|	1AT25L01	P469	346		1AT25L01				
|	1AT26L01	P470	347		1AT26L01				
|	1AT27L01	P471	348		1AT27L01				
|	1AT28L01	P472	349		1AT28L01				
|	1AT29L01	P473	350		1AT29L01				
|	1AT30L01	P474	351		1AT30L01				
|	1AT31L01	P475	352		1AT31L01				
	NC			353	1WG4L0				
	NC			354					
	NC			355	1WG4L0				
	NC			356	1EARTHG				

CAD 005 (CONT'D)

TO CONNECTION					FROM CONNECTION				
DESTINATION	LEAD DESIG	METHOD	WIRE SYM	TERMINAL	LEAD DESIG	TERMINATION	TERMINAL	OPT	NOTE
.....J				04-130	JACK/CP	.....			
	NC			000	-48V11				
	NC			001	-48V11				
	NC			002					
	NC			003					
TO DISTRIBUTING FRAME	1AR00L02	P484	004		1AR00L02				
|	1AR01L02	P485	005		1AR01L02				
|	1AR02L02	P486	006		1AR02L02				
|	1AR03L02	P487	007		1AR03L02				
|	1AR04L02	P488	008		1AR04L02				
|	1AR05L02	P489	009		1AR05L02				
|	1AR06L02	P490	010		1AR06L02				
|	1AR07L02	P491	011		1AR07L02				
	NC			100	-48V11				
	NC			101	-48V11				
	NC			102					
	NC			103					
TO DISTRIBUTING FRAME	1AT00L02	P484	104		1AT00L02				
|	1AT01L02	P485	105		1AT01L02				
|	1AT02L02	P486	106		1AT02L02				
|	1AT03L02	P487	107		1AT03L02				
|	1AT04L02	P488	108		1AT04L02				
|	1AT05L02	P489	109		1AT05L02				
|	1AT06L02	P490	110		1AT06L02				
|	1AT07L02	P491	111		1AT07L02				
.....J				04-130	JACK/CP	.....			
	NC			200	-48RTN11				
	NC			201	-48RTN11				
	NC			202	1JR00				
	NC			203	1JR01				
TO DISTRIBUTING FRAME	1AR16L02	P496	204		1AR16L02				
|	1AR17L02	P497	205		1AR17L02				
|	1AR18L02	P498	206		1AR18L02				
|	1AR19L02	P499	207		1AR19L02				
|	1AR20L02	P500	208		1AR20L02				
|	1AR21L02	P501	209		1AR21L02				
|	1AR22L02	P502	210		1AR22L02				
|	1AR23L02	P503	211		1AR23L02				
	NC			300	-48RTN11				
	NC			301	-48RTN11				
	NC	P494	302		1JT00				
	NC	P495	303		1JT01				
TO DISTRIBUTING FRAME	1AT16L02	P496	304		1AT16L02				
|	1AT17L02	P497	305		1AT17L02				
|	1AT18L02	P498	306		1AT18L02				
|	1AT19L02	P499	307		1AT19L02				
|	1AT20L02	P500	308		1AT20L02				
|	1AT21L02	P501	309		1AT21L02				
|	1AT22L02	P502	310		1AT22L02				
|	1AT23L02	P503	311		1AT23L02				

SEE PROPRIETARY NOTICE ON COVER SHEET

MODULAR METALLIC SERVICE UNIT

DWG SIZE: C2

ISSUE: 2D

AT&T BELL LABORATORIES

SD-5D015-01

GB21

PRINTED IN U. S. A. 12/14/84

CAD 005
(CONT'D)

TO CONNECTION					FROM CONNECTION				
DESTINATION	LEAD DESIG	METHOD	WIRE SYM	TERMINAL	LEAD DESIG	TERMINATION	TERMINAL	OPT	NOTE
.....J				04-130	JACK/CP	.....			
TO DISTRIBUTING FRAME	1AR08L02		P504	045	1AR08L02				
|	1AR09L02		P505	046	1AR09L02				
|	1AR10L02		P506	047	1AR10L02				
|	1AR11L02		P507	048	1AR11L02				
|	1AR12L02		P508	049	1AR12L02				
|	1AR13L02		P509	050	1AR13L02				
|	1AR14L02		P510	051	1AR14L02				
|	1AR15L02		P511	052	1AR15L02				
	NC			053	1WG1L0				
	NC			054	1B2000				
	NC			055	1WG1L0				
	NC			056	1EARTHG				
TO DISTRIBUTING FRAME	1AT08L02		P504	145	1AT08L02				
|	1AT09L02		P505	146	1AT09L02				
|	1AT10L02		P506	147	1AT10L02				
|	1AT11L02		P507	148	1AT11L02				
|	1AT12L02		P508	149	1AT12L02				
|	1AT13L02		P509	150	1AT13L02				
|	1AT14L02		P510	151	1AT14L02				
|	1AT15L02		P511	152	1AT15L02				
	NC			153	1WG2L0				
	NC			154	1B2000				
	NC			155	1WG2L0				
	NC			156	1EARTHG				
.....J				04-130	JACK/CP	.....			
TO DISTRIBUTING FRAME	1AR24L02		P516	245	1AR24L02				
|	1AR25L02		P517	246	1AR25L02				
|	1AR26L02		P518	247	1AR26L02				
|	1AR27L02		P519	248	1AR27L02				
|	1AR28L02		P520	249	1AR28L02				
|	1AR29L02		P521	250	1AR29L02				
|	1AR30L02		P522	251	1AR30L02				
|	1AR31L02		P523	252	1AR31L02				
	NC			253	1WG3L0				
	NC			254	1B2000				
	NC			255	1WG3L0				
	NC			256	1EARTHG				
TO DISTRIBUTING FRAME	1AT24L02		P516	345	1AT24L02				
|	1AT25L02		P517	346	1AT25L02				
|	1AT26L02		P518	347	1AT26L02				
|	1AT27L02		P519	348	1AT27L02				
|	1AT28L02		P520	349	1AT28L02				
|	1AT29L02		P521	350	1AT29L02				
|	1AT30L02		P522	351	1AT30L02				
|	1AT31L02		P523	352	1AT31L02				
	NC			353	1WG4L0				
	NC			354					
	NC			355	1WG4L0				
	NC			356	1EARTHG				
.....J				04-138	JACK/CP	.....			
	NC			000	-48RTN11				
	NC			001	-48V11				
	NC			002					
	NC			003					
TO DISTRIBUTING FRAME	1AR00L03		P532	004	1AR00L03				
|	1AR01L03		P533	005	1AR01L03				
|	1AR02L03		P534	006	1AR02L03				
|	1AR03L03		P535	007	1AR03L03				
|	1AR04L03		P536	008	1AR04L03				
|	1AR05L03		P537	009	1AR05L03				
|	1AR06L03		P538	010	1AR06L03				
|	1AR07L03		P539	011	1AR07L03				
	NC			100	-48V11				
	NC			101	-48V11				
	NC			102					
	NC			103					
TO DISTRIBUTING FRAME	1AT00L03		P532	104	1AT00L03				
|	1AT01L03		P533	105	1AT01L03				
|	1AT02L03		P534	106	1AT02L03				
|	1AT03L03		P535	107	1AT03L03				
|	1AT04L03		P536	108	1AT04L03				
|	1AT05L03		P537	109	1AT05L03				
|	1AT06L03		P538	110	1AT06L03				
|	1AT07L03		P539	111	1AT07L03				

CAD 005
(CONT'D)

TO CONNECTION					FROM CONNECTION				
DESTINATION	LEAD DESIG	METHOD	WIRE SYM	TERMINAL	LEAD DESIG	TERMINATION	TERMINAL	OPT	NOTE
.....J				04-138	JACK/CP	.....			
	NC			200	-48RTN11				
	NC			201	-48RTN11				
	NC		P542	202	1JR00				
	NC		P543	203	1JR01				
TO DISTRIBUTING FRAME	1AR16L03		P544	204	1AR16L03				
|	1AR17L03		P545	205	1AR17L03				
|	1AR18L03		P546	206	1AR18L03				
|	1AR19L03		P547	207	1AR19L03				
|	1AR20L03		P548	208	1AR20L03				
|	1AR21L03		P549	209	1AR21L03				
|	1AR22L03		P550	210	1AR22L03				
|	1AR23L03		P551	211	1AR23L03				
	NC			300	-48RTN11				
	NC			301	-48RTN11				
	NC		P542	302	1JT00				
	NC		P543	303	1JT01				
TO DISTRIBUTING FRAME	1AT16L03		P544	304	1AT16L03				
|	1AT17L03		P545	305	1AT17L03				
|	1AT18L03		P546	306	1AT18L03				
|	1AT19L03		P547	307	1AT19L03				
|	1AT20L03		P548	308	1AT20L03				
|	1AT21L03		P549	309	1AT21L03				
|	1AT22L03		P550	310	1AT22L03				
|	1AT23L03		P551	311	1AT23L03				
.....J				04-138	JACK/CP	.....			
TO DISTRIBUTING FRAME	1AR08L03		P552	045	1AR08L03				
|	1AR09L03		P553	046	1AR09L03				
|	1AR10L03		P554	047	1AR10L03				
|	1AR11L03		P555	048	1AR11L03				
|	1AR12L03		P556	049	1AR12L03				
|	1AR13L03		P557	050	1AR13L03				
|	1AR14L03		P558	051	1AR14L03				
|	1AR15L03		P559	052	1AR15L03				
	NC			053	1WG1L0				
	NC			054	1B3000				
	NC			055	1WG1L0				
	NC			056	1EARTHG				
TO DISTRIBUTING FRAME	1AT08L03		P552	145	1AT08L03				
|	1AT09L03		P553	146	1AT09L03				
|	1AT10L03		P554	147	1AT10L03				
|	1AT11L03		P555	148	1AT11L03				
|	1AT12L03		P556	149	1AT12L03				
|	1AT13L03		P557	150	1AT13L03				
|	1AT14L03		P558	151	1AT14L03				
|	1AT15L03		P559	152	1AT15L03				
	NC			153	1WG2L0				
	NC			154	1B3000				
	NC			155	1WG2L0				
	NC			156	1EARTHG				
.....J				04-138	JACK/CP	.....			
TO DISTRIBUTING FRAME	1AR24L03		P564	245	1AR24L03				
|	1AR25L03		P565	246	1AR25L03				
|	1AR26L03		P566	247	1AR26L03				
|	1AR27L03		P567	248	1AR27L03				
|	1AR28L03		P568	249	1AR28L03				
|	1AR29L03		P569	250	1AR29L03				
|	1AR30L03		P570	251	1AR30L03				
|	1AR31L03		P571	252	1AR31L03				
	NC			253	1WG3L0				
	NC			254	1B3000				
	NC			255	1WG3L0				
	NC			256	1EARTHG				
TO DISTRIBUTING FRAME	1AT24L03		P564	345	1AT24L03				
|	1AT25L03		P565	346	1AT25L03				
|	1AT26L03		P566	347	1AT26L03				
|	1AT27L03		P567	348	1AT27L03				
|	1AT28L03		P568	349	1AT28L03				
|	1AT29L03		P569	350	1AT29L03				
|	1AT30L03		P570	351	1AT30L03				
|	1AT31L03		P571	352	1AT31L03				
	NC			353	1WG4L0				
	NC			354					
	NC			355	1WG4L0				
	NC			356	1EARTHG				

CAD 005
(CONT'D)

TO CONNECTION					FROM CONNECTION				
DESTINATION	LEAD DESIG	METHOD	WIRE SYM	TERMINAL	LEAD DESIG	TERMINATION	TERMINAL	OPT	NOTE
.....J				04-146	JACK/CP	.....			
	NC			000	-48V11				
	NC			001	-48V11				
	NC			002					
	NC			003					
TO DISTRIBUTING FRAME	1AR00L04		P580	004	1AR00L04				
|	1AR01L04		P581	005	1AR01L04				
|	1AR02L04		P582	006	1AR02L04				
|	1AR03L04		P583	007	1AR03L04				
|	1AR04L04		P584	008	1AR04L04				
|	1AR05L04		P585	009	1AR05L04				
|	1AR06L04		P586	010	1AR06L04				
|	1AR07L04		P587	011	1AR07L04				
	NC			100	-48V11				
	NC			101	-48V11				
	NC			102					
	NC			103					
TO DISTRIBUTING FRAME	1AT00L04		P580	104	1AT00L04				
|	1AT01L04		P581	105	1AT01L04				
|	1AT02L04		P582	106	1AT02L04				
|	1AT03L04		P583	107	1AT03L04				
|	1AT04L04		P584	108	1AT04L04				
|	1AT05L04		P585	109	1AT05L04				
|	1AT06L04		P586	110	1AT06L04				
|	1AT07L04		P587	111	1AT07L04				
.....J				04-146	JACK/CP	.....			
	NC			200	-48RTN11				
	NC			201	-48RTN11				
	NC		P590	202	1JR00				
	NC		P591	203	1JR01				
TO DISTRIBUTING FRAME	1AR16L04		P592	204	1AR16L04				
|	1AR17L04		P593	205	1AR17L04				
|	1AR18L04		P594	206	1AR18L04				
|	1AR19L04		P595	207	1AR19L04				
|	1AR20L04		P596	208	1AR20L04				
|	1AR21L04		P597	209	1AR21L04				
|	1AR22L04		P598	210	1AR22L04				
|	1AR23L04		P599	211	1AR23L04				
	NC			300	-48RTN11				
	NC			301	-48RTN11				
	NC		P590	302	1JT00				
	NC		P591	303	1JT01				
TO DISTRIBUTING FRAME	1AT16L04		P592	304	1AT16L04				
|	1AT17L04		P593	305	1AT17L04				
|	1AT18L04		P594	306	1AT18L04				
|	1AT19L04		P595	307	1AT19L04				
|	1AT20L04		P596	308	1AT20L04				
|	1AT21L04		P597	309	1AT21L04				
|	1AT22L04		P598	310	1AT22L04				
|	1AT23L04		P599	311	1AT23L04				

SEE PROPRIETARY NOTICE ON COVER SHEET

MODULAR METALLIC SERVICE UNIT

DWG SIZE	ISSUE
C2	2D

AT&T BELL LABORATORIES	SD-5D015-01	GB22

PRINTED IN U. S. A. 12/14784

CAD 005
(CONT'D)

TO CONNECTION					FROM CONNECTION				
DESTINATION	LEAD DESIG	METHOD	WIRE SYM	TERMINAL	LEAD DESIG	TERMINATION	TERMINAL	OPT	NOTE
.....J				04-146	JACK/CP	.....			
TO DISTRIBUTING FRAME	1AR08L04	P600	045		1AR08L04				
|	1AR09L04	P601	046		1AR09L04				
|	1AR10L04	P602	047		1AR10L04				
|	1AR11L04	P603	048		1AR11L04				
|	1AR12L04	P604	049		1AR12L04				
|	1AR13L04	P605	050		1AR13L04				
|	1AR14L04	P606	051		1AR14L04				
|	1AR15L04	P607	052		1AR15L04				
	NC		053		1WG1LO				
	NC		054		1B4000				
	NC		055		1WG1LO				
	NC		056		1EARTHG				
TO DISTRIBUTING FRAME	1AT08L04	P600	145		1AT08L04				
|	1AT09L04	P601	146		1AT09L04				
|	1AT10L04	P602	147		1AT10L04				
|	1AT11L04	P603	148		1AT11L04				
|	1AT12L04	P604	149		1AT12L04				
|	1AT13L04	P605	150		1AT13L04				
|	1AT14L04	P606	151		1AT14L04				
|	1AT15L04	P607	152		1AT15L04				
	NC		153		1WG2LO				
	NC		154		1B4000				
	NC		155		1WG2LO				
	NC		156		1EARTHG				
.....J				04-146	JACK/CP	.....			
TO DISTRIBUTING FRAME	1AR24L04	P612	245		1AR24L04				
|	1AR25L04	P613	246		1AR25L04				
|	1AR26L04	P614	247		1AR26L04				
|	1AR27L04	P615	248		1AR27L04				
|	1AR28L04	P616	249		1AR28L04				
|	1AR29L04	P617	250		1AR29L04				
|	1AR30L04	P618	251		1AR30L04				
|	1AR31L04	P619	252		1AR31L04				
	NC		253		1WG3LO				
	NC		254		1B4000				
	NC		255		1WG3LO				
	NC		256		1EARTHG				
TO DISTRIBUTING FRAME	1AT24L04	P612	345		1AT24L04				
|	1AT25L04	P613	346		1AT25L04				
|	1AT26L04	P614	347		1AT26L04				
|	1AT27L04	P615	348		1AT27L04				
|	1AT28L04	P616	349		1AT28L04				
|	1AT29L04	P617	350		1AT29L04				
|	1AT30L04	P618	351		1AT30L04				
|	1AT31L04	P619	352		1AT31L04				
	NC		353		1WG4LO				
	NC		354						
	NC		355		1WG4LO				
	NC		356		1EARTHG				
.....J				04-154	JACK/CP	.....			
	NC		000		-48V11				
	NC		001		-48V11				
	NC		002						
	NC		003						
TO DISTRIBUTING FRAME	1AR00L05	P628	004		1AR00L05				
|	1AR01L05	P629	005		1AR01L05				
|	1AR02L05	P631	006		1AR02L05				
|	1AR03L05	P630	007		1AR03L05				
|	1AR04L05	P632	008		1AR04L05				
|	1AR05L05	P633	009		1AR05L05				
|	1AR06L05	P634	010		1AR06L05				
|	1AR07L05	P635	011		1AR07L05				
	NC		100		-48V11				
	NC		101		-48V11				
	NC		102						
	NC		103						
TO DISTRIBUTING FRAME	1AT00L05	P628	104		1AT00L05				
|	1AT01L05	P629	105		1AT01L05				
|	1AT02L05	P631	106		1AT02L05				
|	1AT03L05	P630	107		1AT03L05				
|	1AT04L05	P632	108		1AT04L05				
|	1AT05L05	P633	109		1AT05L05				
|	1AT06L05	P634	110		1AT06L05				
|	1AT07L05	P635	111		1AT07L05				

CAD 005
(CONT'D)

TO CONNECTION					FROM CONNECTION				
DESTINATION	LEAD DESIG	METHOD	WIRE SYM	TERMINAL	LEAD DESIG	TERMINATION	TERMINAL	OPT	NOTE
.....J				04-154	JACK/CP	.....			
	NC		200		-48RTN11				
	NC		201		-48RTN11				
	NC	P638	202		1JR00				
	NC	P639	203		1JR01				
TO DISTRIBUTING FRAME	1AR16L05	P640	204		1AR16L05				
|	1AR17L05	P641	205		1AR17L05				
|	1AR18L05	P642	206		1AR18L05				
|	1AR19L05	P643	207		1AR19L05				
|	1AR20L05	P644	208		1AR20L05				
|	1AR21L05	P645	209		1AR21L05				
|	1AR22L05	P646	210		1AR22L05				
|	1AR23L05	P647	211		1AR23L05				
	NC		300		-48RTN11				
	NC		301		-48RTN11				
	NC	P638	302		1JT00				
	NC	P639	303		1JT01				
TO DISTRIBUTING FRAME	1AT16L05	P640	304		1AT16L05				
|	1AT17L05	P641	305		1AT17L05				
|	1AT18L05	P642	306		1AT18L05				
|	1AT19L05	P643	307		1AT19L05				
|	1AT20L05	P644	308		1AT20L05				
|	1AT21L05	P645	309		1AT21L05				
|	1AT22L05	P646	310		1AT22L05				
|	1AT23L05	P647	311		1AT23L05				
.....J				04-154	JACK/CP	.....			
TO DISTRIBUTING FRAME	1AR08L05	P648	045		1AR08L05				
|	1AR09L05	P649	046		1AR09L05				
|	1AR10L05	P650	047		1AR10L05				
|	1AR11L05	P651	048		1AR11L05				
|	1AR12L05	P652	049		1AR12L05				
|	1AR13L05	P653	050		1AR13L05				
|	1AR14L05	P654	051		1AR14L05				
|	1AR15L05	P655	052		1AR15L05				
	NC		053		1WG1LO				
	NC		054		1B5000				
	NC		055		1WG1LO				
	NC		056		1EARTHG				
TO DISTRIBUTING FRAME	1AT08L05	P648	145		1AT08L05				
|	1AT09L05	P649	146		1AT09L05				
|	1AT10L05	P650	147		1AT10L05				
|	1AT11L05	P651	148		1AT11L05				
|	1AT12L05	P652	149		1AT12L05				
|	1AT13L05	P653	150		1AT13L05				
|	1AT14L05	P654	151		1AT14L05				
|	1AT15L05	P655	152		1AT15L05				
	NC		153		1WG2LO				
	NC		154		1B5000				
	NC		155		1WG2LO				
	NC		156		1EARTHG				
.....J				04-154	JACK/CP	.....			
TO DISTRIBUTING FRAME	1AR24L05	P660	245		1AR24L05				
|	1AR25L05	P661	246		1AR25L05				
|	1AR26L05	P662	247		1AR26L05				
|	1AR27L05	P663	248		1AR27L05				
|	1AR28L05	P664	249		1AR28L05				
|	1AR29L05	P665	250		1AR29L05				
|	1AR30L05	P666	251		1AR30L05				
|	1AR31L05	P667	252		1AR31L05				
	NC		253		1WG3LO				
	NC		254		1B5000				
	NC		255		1WG3LO				
	NC		256		1EARTHG				
TO DISTRIBUTING FRAME	1AT24L05	P660	345		1AT24L05				
|	1AT25L05	P661	346		1AT25L05				
|	1AT26L05	P662	347		1AT26L05				
|	1AT27L05	P663	348		1AT27L05				
|	1AT28L05	P664	349		1AT28L05				
|	1AT29L05	P665	350		1AT29L05				
|	1AT30L05	P666	351		1AT30L05				
|	1AT31L05	P667	352		1AT31L05				
	NC		353		1WG4LO				
	NC		354						
	NC		355		1WG4LO				
	NC		356		1EARTHG				

CAD 005
(CONT'D)

TO CONNECTION					FROM CONNECTION				
DESTINATION	LEAD DESIG	METHOD	WIRE SYM	TERMINAL	LEAD DESIG	TERMINATION	TERMINAL	OPT	NOTE
.....J				04-162	JACK/CP	.....			
	NC		000		-48V11				
	NC		001		-48V11				
	NC		002						
	NC		003						
TO DISTRIBUTING FRAME	1AR00L06	P676	004		1AR00L06				
|	1AR01L06	P677	005		1AR01L06				
|	1AR02L06	P678	006		1AR02L06				
|	1AR03L06	P679	007		1AR03L06				
|	1AR04L06	P680	008		1AR04L06				
|	1AR05L06	P681	009		1AR05L06				
|	1AR06L06	P682	010		1AR06L06				
|	1AR07L06	P683	011		1AR07L06				
	NC		100		-48V11				
	NC		101		-48V11				
	NC		102						
	NC		103						
TO DISTRIBUTING FRAME	1AT00L06	P676	104		1AT00L06				
|	1AT01L06	P677	105		1AT01L06				
|	1AT02L06	P678	106		1AT02L06				
|	1AT03L06	P679	107		1AT03L06				
|	1AT04L06	P680	108		1AT04L06				
|	1AT05L06	P681	109		1AT05L06				
|	1AT06L06	P682	110		1AT06L06				
|	1AT07L06	P683	111		1AT07L06				
.....J				04-162	JACK/CP	.....			
	NC		200		-48RTN11				
	NC		201		-48RTN11				
	NC	P686	202		1JR00				
	NC	P687	203		1JR01				
TO DISTRIBUTING FRAME	1AR16L06	P688	204		1AR16L06				
|	1AR17L06	P689	205		1AR17L06				
|	1AR18L06	P690	206		1AR18L06				
|	1AR19L06	P691	207		1AR19L06				
|	1AR20L06	P692	208		1AR20L06				
|	1AR21L06	P693	209		1AR21L06				
|	1AR22L06	P694	210		1AR22L06				
|	1AR23L06	P695	211		1AR23L06				
	NC		300		-48RTN11				
	NC		301		-48RTN11				
	NC	P686	302		1JT00				
	NC	P687	303		1JT01				
TO DISTRIBUTING FRAME	1AT16L06	P688	304		1AT16L06				
|	1AT17L06	P689	305		1AT17L06				
|	1AT18L06	P690	306		1AT18L06				
|	1AT19L06	P691	307		1AT19L06				
|	1AT20L06	P692	308		1AT20L06				
|	1AT21L06	P693	309		1AT21L06				
|	1AT22L06	P694	310		1AT22L06				
|	1AT23L06	P695	311		1AT23L06				

SEE PROPRIETARY NOTICE ON COVER SHEET

MODULAR METALLIC SERVICE UNIT

DWG SIZE: D2

ISSUE: 2D

AT&T BELL LABORATORIES

SD-5D015-01

GB23

PRINTED IN U. S. A.

12/14/84

CAD 005
(CONT'D)

TO CONNECTION					FROM CONNECTION				
DESTINATION	LEAD DESIG	METHOD	WIRE SYM	TERMINAL	LEAD DESIG	TERMINATION	TERMINAL	OPT	NOTE
.....J				04-162	JACK/CP	.....			
TO DISTRIBUTING FRAME	1AR08L06		P696	045	1AR08L06				
	1AR09L06		P697	046	1AR09L06				
	1AR10L06		P698	047	1AR10L06				
	1AR11L06		P699	048	1AR11L06				
	1AR12L06		P700	049	1AR12L06				
	1AR13L06		P701	050	1AR13L06				
	1AR14L06		P702	051	1AR14L06				
	1AR15L06		P703	052	1AR15L06				
	NC			053	1WG1L0				
	NC			054	1B6000				
	NC			055	1WG1L0				
	NC			056	1EARTHG				
TO DISTRIBUTING FRAME	1AT08L06		P696	145	1AT08L06				
	1AT09L06		P697	146	1AT09L06				
	1AT10L06		P698	147	1AT10L06				
	1AT11L06		P699	148	1AT11L06				
	1AT12L06		P700	149	1AT12L06				
	1AT13L06		P701	150	1AT13L06				
	1AT14L06		P702	151	1AT14L06				
	1AT15L06		P703	152	1AT15L06				
	NC			153	1WG2L0				
	NC			154	1B6000				
	NC			155	1WG2L0				
	NC			156	1EARTHG				
.....J				04-162	JACK/CP	.....			
TO DISTRIBUTING FRAME	1AR24L06		P708	245	1AR24L06				
	1AR25L06		P709	246	1AR25L06				
	1AR26L06		P710	247	1AR26L06				
	1AR27L06		P711	248	1AR27L06				
	1AR28L06		P712	249	1AR28L06				
	1AR29L06		P713	250	1AR29L06				
	1AR30L06		P714	251	1AR30L06				
	1AR31L06		P715	252	1AR31L06				
	NC			253	1WG3L0				
	NC			254	1B6000				
	NC			255	1WG3L0				
	NC			256	1EARTHG				
TO DISTRIBUTING FRAME	1AT24L06		P708	345	1AT24L06				
	1AT25L06		P709	346	1AT25L06				
	1AT26L06		P710	347	1AT26L06				
	1AT27L06		P711	348	1AT27L06				
	1AT28L06		P712	349	1AT28L06				
	1AT29L06		P713	350	1AT29L06				
	1AT30L06		P714	351	1AT30L06				
	1AT31L06		P715	352	1AT31L06				
	NC			353	1WG4L0				
	NC			354					
	NC			355	1WG4L0				
	NC			356	1EARTHG				
.....J				04-170	JACK/CP	.....			
	NC			000	-48V11				
	NC			001	-48V11				
	NC			002					
	NC			003					
TO DISTRIBUTING FRAME	1AR00L07		P724	004	1AR00L07				
	1AR01L07		P725	005	1AR01L07				
	1AR02L07		P726	006	1AR02L07				
	1AR03L07		P727	007	1AR03L07				
	1AR04L07		P728	008	1AR04L07				
	1AR05L07		P729	009	1AR05L07				
	1AR06L07		P730	010	1AR06L07				
	1AR07L07		P731	011	1AR07L07				
	NC			100	-48V11				
	NC			101	-48V11				
	NC			102					
	NC			103					
TO DISTRIBUTING FRAME	1AT00L07		P724	104	1AT00L07				
	1AT01L07		P725	105	1AT01L07				
	1AT02L07		P726	106	1AT02L07				
	1AT03L07		P727	107	1AT03L07				
	1AT04L07		P728	108	1AT04L07				
	1AT05L07		P729	109	1AT05L07				
	1AT06L07		P730	110	1AT06L07				
	1AT07L07		P731	111	1AT07L07				

CAD 005
(CONT'D)

TO CONNECTION					FROM CONNECTION				
DESTINATION	LEAD DESIG	METHOD	WIRE SYM	TERMINAL	LEAD DESIG	TERMINATION	TERMINAL	OPT	NOTE
.....J				04-170	JACK/CP	.....			
	NC			200	-48RTN11				
	NC			201	-48RTN11				
	NC		P734	202	1JR00				
	NC		P735	203	1JR01				
TO DISTRIBUTING FRAME	1AR16L07		P736	204	1AR16L07				
	1AR17L07		P737	205	1AR17L07				
	1AR18L07		P738	206	1AR18L07				
	1AR19L07		P739	207	1AR19L07				
	1AR20L07		P740	208	1AR20L07				
	1AR21L07		P741	209	1AR21L07				
	1AR22L07		P742	210	1AR22L07				
	1AR23L07		P743	211	1AR23L07				
	NC			300	-48RTN11				
	NC			301	-48RTN11				
	NC		P734	302	1JT00				
	NC		P735	303	1JT01				
TO DISTRIBUTING FRAME	1AT16L07		P736	304	1AT16L07				
	1AT17L07		P737	305	1AT17L07				
	1AT18L07		P738	306	1AT18L07				
	1AT19L07		P739	307	1AT19L07				
	1AT20L07		P740	308	1AT20L07				
	1AT21L07		P741	309	1AT21L07				
	1AT22L07		P742	310	1AT22L07				
	1AT23L07		P743	311	1AT23L07				
.....J				04-170	JACK/CP	.....			
TO DISTRIBUTING FRAME	1AR08L07		P744	045	1AR08L07				
	1AR09L07		P745	046	1AR09L07				
	1AR10L07		P746	047	1AR10L07				
	1AR11L07		P747	048	1AR11L07				
	1AR12L07		P748	049	1AR12L07				
	1AR13L07		P749	050	1AR13L07				
	1AR14L07		P750	051	1AR14L07				
	1AR15L07		P751	052	1AR15L07				
	NC			053	1WG1L0				
	NC			054	1B7000				
	NC			055	1WG1L0				
	NC			056	1EARTHG				
TO DISTRIBUTING FRAME	1AT08L07		P744	145	1AT08L07				
	1AT09L07		P745	146	1AT09L07				
	1AT10L07		P746	147	1AT10L07				
	1AT11L07		P747	148	1AT11L07				
	1AT12L07		P748	149	1AT12L07				
	1AT13L07		P749	150	1AT13L07				
	1AT14L07		P750	151	1AT14L07				
	1AT15L07		P751	152	1AT15L07				
	NC			153	1WG2L0				
	NC			154	1B7000				
	NC			155	1WG2L0				
	NC			156	1EARTHG				
.....J				04-170	JACK/CP	.....			
TO DISTRIBUTING FRAME	1AR24L07		P756	245	1AR24L07				
	1AR25L07		P757	246	1AR25L07				
	1AR26L07		P758	247	1AR26L07				
	1AR27L07		P759	248	1AR27L07				
	1AR28L07		P760	249	1AR28L07				
	1AR29L07		P761	250	1AR29L07				
	1AR30L07		P762	251	1AR30L07				
	1AR31L07		P763	252	1AR31L07				
	NC			253	1WG3L0				
	NC			254	1B7000				
	NC			255	1WG3L0				
	NC			256	1EARTHG				
TO DISTRIBUTING FRAME	1AT24L07		P756	345	1AT24L07				
	1AT25L07		P757	346	1AT25L07				
	1AT26L07		P758	347	1AT26L07				
	1AT27L07		P759	348	1AT27L07				
	1AT28L07		P760	349	1AT28L07				
	1AT29L07		P761	350	1AT29L07				
	1AT30L07		P762	351	1AT30L07				
	1AT31L07		P763	352	1AT31L07				
	NC			353	1WG4L0				
	NC			354					
	NC			355	1WG4L0				
	NC			356	1EARTHG				

CAD 006
METALLIC TEST INTERCONNECTION BUSES

TO CONNECTION					FROM CONNECTION				
DESTINATION	LEAD DESIG	METHOD	WIRE SYM	TERMINAL	LEAD DESIG	TERMINATION	TERMINAL	OPT	NOTE
.....J				04-090	JACK/TF	.....			
TO COMM CKT	MTIB00R		P000	213	MTIB00R	04-090	CP	204	
	MTIB01R		P001	214	MTIB01R	04-090	CP	205	
	MTIB02R		P002	215	MTIB02R	04-090	CP	206	
	MTIB03R		P003	216	MTIB03R	04-090	CP	207	
	MTIB04R		P004	217	MTIB04R	04-090	CP	208	
	MTIB05R		P005	218	MTIB05R	04-090	CP	209	
	MTIB06R		P006	219	MTIB06R	04-090	CP	210	
	MTIB07R		P007	220	MTIB07R	04-090	CP	211	
	NC			221	GRD04090				
	NC			222	OASW00				
	NC			223					
	NC			224	GRD04090				
TO COMM CKT	MTIB00T		P000	313	MTIB00T	04-090	CP	304	
	MTIB01T		P001	314	MTIB01T	04-090	CP	305	
	MTIB02T		P002	315	MTIB02T	04-090	CP	306	
	MTIB03T		P003	316	MTIB03T	04-090	CP	307	
	MTIB04T		P004	317	MTIB04T	04-090	CP	308	
	MTIB05T		P005	318	MTIB05T	04-090	CP	309	
	MTIB06T		P006	319	MTIB06T	04-090	CP	310	
	MTIB07T		P007	320	MTIB07T	04-090	CP	311	
	NC			321	GRD04090				
	NC			322	OASW01				
	NC			323	OORIN0				
	NC			324	GRD04090				
.....J				04-090	JACK/TF	.....			
	NC			232	GRD04090				
	NC			233	OOWOUT0				
	NC			234	GRD04090				
	NC			235	GRD04090				
TO COMM CKT	MTIB08R		P016	236	MTIB08R	04-090	CP	245	
	MTIB09R		P017	237	MTIB09R	04-090	CP	246	
	MTIB10R		P018	238	MTIB10R	04-090	CP	247	
	MTIB11R		P019	239	MTIB11R	04-090	CP	248	
	MTIB12R		P020	240	MTIB12R	04-090	CP	249	
	MTIB13R		P021	241	MTIB13R	04-090	CP	250	
	MTIB14R		P022	242	MTIB14R	04-018	CP	212	
	MTIB15R		P023	243	MTIB15R	04-106	CP	212	
	NC			332	GRD04090				
	NC			333	DCLK00				
	NC			334	GRD04090				
	NC			335	GRD04090				
TO COMM CKT	MTIB08T		P016	336	MTIB08T	04-090	CP	345	
	MTIB09T		P017	337	MTIB09T	04-090	CP	346	
	MTIB10T		P018	338	MTIB10T	04-090	CP	347	
	MTIB11T		P019	339	MTIB11T	04-090	CP	348	
	MTIB12T		P020	340	MTIB12T	04-090	CP	349	
	MTIB13T		P021	341	MTIB13T	04-090	CP	350	
	MTIB14T		P022	342	MTIB14T	04-018	CP	312	
	MTIB15T		P023	343	MTIB15T	04-106	CP	312	

SEE PROPRIETARY NOTICE ON COVER SHEET

MODULAR METALLIC SERVICE UNIT

DWG SIZE	ISSUE
C2	2D

AT&T BELL LABORATORIES | SD-5D015-01 | GB24

PRINTED IN U. S. A. 12/14/92

CAD 006
(CONT'D)

TO CONNECTION DESTINATION	TO CONNECTION LEAD DESIG	METHOD	WIRE SYM	TERMINAL	FROM CONNECTION LEAD DESIG	FROM CONNECTION TERMINATION	FROM CONNECTION TERMINAL	OPT	NOTE
.....J				04-178	JACK/CP	.....			
	NC			200					
	NC			201					
TO CONN CKT	1JR00		P026	202	1JR00				
	1JR01		P027	203	1JR01				
	MTIB00R		P028	204	MTIB00R				
	MTIB01R		P029	205	MTIB01R				
	MTIB02R		P030	206	MTIB02R				
	MTIB03R		P031	207	MTIB03R				
	MTIB04R		P032	208	MTIB04R				
	MTIB05R		P033	209	MTIB05R				
	MTIB06R		P034	210	MTIB06R				
	MTIB07R		P035	211	MTIB07R				
	NC			300					
	NC			301					
TO CONN CKT	1JT00		P026	302	1JT00				
	1JT01		P027	303	1JT01				
	MTIB00T		P028	304	MTIB00T				
	MTIB01T		P029	305	MTIB01T				
	MTIB02T		P030	306	MTIB02T				
	MTIB03T		P031	307	MTIB03T				
	MTIB04T		P032	308	MTIB04T				
	MTIB05T		P033	309	MTIB05T				
	MTIB06T		P034	310	MTIB06T				
	MTIB07T		P035	311	MTIB07T				
.....J				04-178	JACK/TF	.....			
TO CONN CKT	MTIB00R		P036	213	MTIB00R	04-090	CP	204	
	MTIB01R		P037	214	MTIB01R	04-090	CP	205	
	MTIB02R		P038	215	MTIB02R	04-090	CP	206	
	MTIB03R		P039	216	MTIB03R	04-090	CP	207	
	MTIB04R		P040	217	MTIB04R	04-090	CP	208	
	MTIB05R		P041	218	MTIB05R	04-090	CP	209	
	MTIB06R		P042	219	MTIB06R	04-090	CP	210	
	MTIB07R		P043	220	MTIB07R	04-090	CP	211	
	NC			221	GRD04178				
	NC			222	1ASW00				
	NC			223					
	NC			224	GRD04178				
TO CONN CKT	MTIB00T		P036	313	MTIB00T	04-090	CP	304	
	MTIB01T		P037	314	MTIB01T	04-090	CP	305	
	MTIB02T		P038	315	MTIB02T	04-090	CP	306	
	MTIB03T		P039	316	MTIB03T	04-090	CP	307	
	MTIB04T		P040	317	MTIB04T	04-090	CP	308	
	MTIB05T		P041	318	MTIB05T	04-090	CP	309	
	MTIB06T		P042	319	MTIB06T	04-090	CP	310	
	MTIB07T		P043	320	MTIB07T	04-090	CP	311	
	NC			321	GRD04178				
	NC			322	1ASW01				
	NC			323	1DRIN0				
	NC			324	GRD04178				
.....J				04-178	JACK/TF	.....			
	NC			232	GRD04178				
	NC			233	1DW0UT0				
	NC			234	GRD04178				
	NC			235	GRD04178				
TO CONN CKT	MTIB08R		P052	236	MTIB08R	04-090	CP	248	
	MTIB09R		P053	237	MTIB09R	04-090	CP	246	
	MTIB10R		P054	238	MTIB10R	04-090	CP	247	
	MTIB11R		P055	239	MTIB11R	04-090	CP	248	
	MTIB12R		P056	240	MTIB12R	04-090	CP	249	
	MTIB13R		P057	241	MTIB13R	04-090	CP	250	
	MTIB14R		P058	242	MTIB14R	04-013	CP	212	
	MTIB15R		P059	243	MTIB15R	04-106	CP	212	
	NC			332	GRD04178				
	NC			333	1CLK00				
	NC			334	GRD04178				
	NC			335	GRD04178				
TO CONN CKT	MTIB08T		P052	336	MTIB08T	04-090	CP	343	
	MTIB09T		P053	337	MTIB09T	04-090	CP	346	
	MTIB10T		P054	338	MTIB10T	04-090	CP	347	
	MTIB11T		P055	339	MTIB11T	04-090	CP	348	
	MTIB12T		P056	340	MTIB12T	04-090	CP	349	
	MTIB13T		P057	341	MTIB13T	04-090	CP	350	
	MTIB14T		P058	342	MTIB14T	04-018	CP	312	
	MTIB15T		P059	343	MTIB15T	04-106	CP	312	

CAD 006
(CONT'D)

TO CONNECTION DESTINATION	TO CONNECTION LEAD DESIG	METHOD	WIRE SYM	TERMINAL	FROM CONNECTION LEAD DESIG	FROM CONNECTION TERMINATION	FROM CONNECTION TERMINAL	OPT	NOTE
.....J				04-178	JACK/CP	.....			
TO CONN CKT	MTIB08R		P068	245	MTIB08R				
	MTIB09R		P061	246	MTIB09R				
	MTIB10R		P062	247	MTIB10R				
	MTIB11R		P063	248	MTIB11R				
	MTIB12R		P064	249	MTIB12R				
	MTIB13R		P065	250	MTIB13R				
	MTIB08T		P060	345	MTIB08T				
	MTIB09T		P061	346	MTIB09T				
	MTIB10T		P062	347	MTIB10T				
	MTIB11T		P063	348	MTIB11T				
	MTIB12T		P064	349	MTIB12T				
	MTIB13T		P065	350	MTIB13T				
.....J				04-178	JACK/CP	.....			
TO CONN CKT	MTIB14R		P066	251	MTIB14R				
	MTIB15R		P067	252	MTIB15R				
	NC			253	GRD04178				
	NC			254	1B0000				
	NC			255					
	NC			256					
TO CONN CKT	MTIB14T		P066	351	MTIB14T				
	MTIB15T		P067	352	MTIB15T				
	NC			353	GRD04178				
	NC			354					
	NC			355					
	NC			356					

CAD 007
POWER AND GROUND ACCESS

TO CONNECTION DESTINATION	TO CONNECTION LEAD DESIG	METHOD	WIRE SYM	TERMINAL	FROM CONNECTION LEAD DESIG	FROM CONNECTION TERMINATION	FROM CONNECTION TERMINAL	OPT	NOTE
.....J				01-013	LUG	.....			
TO FUSE PANEL	-48RTN00			0B0	-48RTN00	04-010	CP	004	
.....J				01-016	LUG	.....			
TO FUSE PANEL	-48V00			0B0	-48V00	04-010	CP	006	
.....J				01-018	LUG	.....			
TO FUSE PANEL	GRD04010			1B0	GRD04010	04-010	CP	001	
.....J				01-039	LUG	.....			
TO FUSE PANEL	-48RTN01			0B0	-48RTN01	04-018	CP	201	
.....J				01-065	LUG	.....			
TO FUSE PANEL	-48V01			0B0	-48V01	04-018	CP	009	
.....J				01-087	LUG	.....			
TO FUSE PANEL	GRD04010			0B0	GRD04010	04-010	CP	001	
.....J				01-101	LUG	.....			
TO FUSE PANEL	-48RTN10			0B0	-48RTN10	04-098	CP	102	
.....J				01-104	LUG	.....			
TO FUSE PANEL	-48V10			0B0	-48V10	04-098	CP	007	

CAD 007
(CONT'D)

TO CONNECTION DESTINATION	TO CONNECTION LEAD DESIG	METHOD	WIRE SYM	TERMINAL	FROM CONNECTION LEAD DESIG	FROM CONNECTION TERMINATION	FROM CONNECTION TERMINAL	OPT	NOTE
.....J				01-127	LUG	.....			
TO FUSE PANEL	-48RTN11			0B0	-48RTN11	04-106	CP	200	
.....J				01-153	LUG	.....			
TO FUSE PANEL	-48V11			0B0	-48V11	04-106	CP	000	
.....J				01-175	LUG	.....			
TO FUSE PANEL	GRD04010			0B0	GRD04010	04-010	CP	001	
.....J				07-018	LUG	.....			
TO FUSE PANEL	GRD04010			157	GRD04010	04-010	CP	001	
.....J				07-065	LUG	.....			
TO SESS GROUND WINDOW	0EARTHG			057	0EARTHG	04-026	CP	156	
.....J				07-087	LUG	.....			
TO FUSE PANEL	GRD04010			057	GRD04010	04-010	CP	001	
.....J				07-127	LUG	.....			
TO SESS GROUND WINDOW	1EARTHG			057	1EARTHG	04-114	CP	256	
.....J				07-175	LUG	.....			
TO FUSE PANEL	GRD04010			057	GRD04010	04-010	CP	001	

CAD 008
SPARE BACKPLANE WIRING

TO CONNECTION DESTINATION	TO CONNECTION LEAD DESIG	METHOD	WIRE SYM	TERMINAL	FROM CONNECTION LEAD DESIG	FROM CONNECTION TERMINATION	FROM CONNECTION TERMINAL	OPT	NOTE
.....J				04-090	CPTF	.....			
	NC			054	0B8000	04-018	CP	110	
	NC			154	0B6000	04-018	CP	110	
.....J				04-178	CPTF	.....			
	NC			054	1B8000	04-106	CP	110	
	NC			154	1B6000	04-106	CP	110	

SEE PROPRIETARY NOTICE ON COVER SHEET

MODULAR METALLIC SERVICE UNIT		DWG SIZE D2	ISSUE 2D
AT&T BELL LABORATORIES	SD-50015-01		G825

12/14/84

CAD 009

AUTO POWER RESTART

TO CONNECTION					FROM CONNECTION				
DESTINATION	LEAD DESIG	METHOD	WIRE SYM	TERMINAL	LEAD DESIG	TERMINATION	TERMINAL	OPT	NOTE
.....	J		04-010	STRAP	.....				
0S1S2			011	0S1S2	04-010		110	(T)	302
.....	J		04-098	STRAP	.....				
1S1S2			011	1S1S2	04-098		110	(T)	302

COPYRIGHT © 1992 AT&T
ALL RIGHTS RESERVED

MODULAR METALLIC SERVICE UNIT

DWG SIZE: D

ISSUE: 8B

AT&T

SD-5D015-01

GB26

PRINTED IN U.S.A.