Nortel Communication Server 1000

Features and Services Fundamentals—Book 5 of 6 (N to R)

NN43001-106

Document status: Standard
Document version: 01.01
Document date: 30 May 2007

Copyright © 1994–2007, Nortel Networks
All Rights Reserved.

Sourced in Canada.

The information in this document is subject to change without notice. The statements, configurations, technical data, and recommendations in this document are believed to be accurate and reliable, but are presented without express or implied warranty. Users must take full responsibility for their applications of any products specified in this document. The information in this document is proprietary to Nortel Networks.

Nortel, the Nortel logo and the Globemark are trademarks of Nortel Networks.

All other trademarks are the property of their respective owners.

Revision history

May 2007

Standard 01.01. This document is up-issued to support Communication Server 1000 Release 5.0. This document is renamed Features and Services Fundamentals (NN43001-106) and contains information previously contained in the following legacy documents, now retired:

- Features and Services: Book 1 of 3 (A to C) (553-3001-306B1)
- Features and Services: Book 2 of 3 (D to M) (553-3001-306B2)
- Features and Services: Book 3 of 3 (N to Z) (553-3001-306B3)

July 2006

Standard 17.00. This document is up-issued to reflect the following changes:

- Addition of M3900 Full Icon Support feature on pages 797 to 800 (Book 2), due to CR Q00926961.
- Addition of M3900 Set-to-Set Messaging feature on pages 801 to 806 (Book 2), due to CR Q00926961.
- Addition of M3900 series digital telephone feature reference on pages 341, 342 of the Personal Directory chapter (Book 3), due to CR Q00926961.
- Addition of Flexible Feature Codes to list on pages 371 to 376 of Flexible Feature Codes chapter (Book 2), due to CR Q0136199.

April 2006

Standard 16.00. This document is up-issued to reflect the following changes in content:

- Addition of keycode commands for CP PIV on pages 595 to 610 (Book 2), due to CR Q01296486.
- Addition of IPMG on CS1000E to the following: operating parameters on page 364 (Book 3); and LD 97 on page 379 (Book 3), due to CR Q01272524.

Copyright © 1994–2007, Nortel Networks
Nortel Networks Confidential

- Additions to the following: Call Redirection by Day on page 848 (Book1); the CRDAY prompt on page 852 (Book 1); and Call Redirection by Time of Day on page 858 (Book 1), due to CR Q01297600.
- Correction to Message Intercept for Set Status Lockout on pages 982-983 (Book 2), due to CR Q01168852.
- •Correction to SECA001 alarm message on page 402 (Book 1), due to CR Q01223733.

January 2006
Standard 15.00. This document is up-issued to reflect the following changes in content:

- Addition of Converged Office feature on page 1247 (Book 1); changes to interactions with Call Forward All Calls on pages 647, 648, 721, 725 (Book 1), and 521 (Book 2), due to CR Q01200310.
- Addition of IP Phones to supported sets referenced in Selectable Conferee Display and Disconnect on pages 667 to 700 (Book 3), due to CR Q01009956.

August 2005
Standard 14.00. This document is up-issued to support Communication Server 1000 Release 4.5.

September 2004
Standard 13.00. This document is up-issued for Communication Server 1000 Release 4.0.

October 2003
Standard 12.00. This document is issued for Succession 3.0.

November 2002
Standard 11.00. This document is up-issued to support Meridian 1 Release 25.40 and Succession Communication Server for Enterprise (CSE) 1000, Release 2.0. This is book 3 of a 3 book set.

January 2002
Standard 10.00. Up-issued to include content for Meridian 1 Release 25.40 and Succession Communication Server for Enterprise 1000, Release 1.1.

April 2000
Standard 9.00. This is a global document and is up-issued for Release 25.0x. Document changes include removal of: redundant content; references to equipment types except Options 11C, 51C, 61C, and 81C; and references to previous software releases.

Copyright © 1994–2007, Nortel Networks
Nortel Networks Confidential

June 1999
Issue 8.00 released as Standard for Generic Release 24.2x.

October 1997
Issue 7.00. This is the Release 23.0x standard version of this document. Certain application-specific features have been removed from this document and have been placed in their appropriate Nortel Networks technical publications (NTPs). Automatic Call Distribution features can be found in *Automatic Call Distribution Feature description* 553-2671-110; Call Detail Recording features can be found in *Call Detail Recording Description and formats* 553-2631-100; Primary Rate Interface features can be found in *International ISDN PRI Feature description and administration* 553-2901-301; R2MFC and MFC features can be found in *Multifrequency Compelled Signaling* 553-2861-100; and DPNSS1 features can be found in *DPNSS1 Features and Services* 553-3921-300.

August 1996
Issue 6.00. This is the Release 22.0x standard version of this document. The features Automatic Number Identification, Automatic Trunk Maintenance, Multi Tenant Service, Radio Paging and X08/11 Gateway have been incorporated into this document. Accordingly, the following Nortel Networks technical publications have been retired to reflect this change: 553-2611-200, 553-2751-104, 553-2831-100, 553-2721-111 and 553-2941-100.

December 1995
Issue 5.00. This is the Release 21.1x standard version of this document.

July 1995
Issue 4.00. This is the Release 21 standard version of this document.

October 1994
Issue 2.0. This is the Release 20.1x soak version of the document.

July 1994
Issue 1.0. This is the Release 20.0x standard version of this document.

Copyright © 1994–2007, Nortel Networks
Nortel Networks Confidential

Copyright © 1994–2007, Nortel Networks
Nortel Networks Confidential

Contents

How to get help 37

Getting help from the Nortel web site 37
Getting help over the telephone from a Nortel Solutions Center 37
Getting help from a specialist by using an Express Routing Code 37
Getting help through a Nortel distributor or reseller 38

Features and Software options 39

N Digit DNIS 89

Contents 89
Feature description 89
Operating parameters 89
Feature interactions 90
- Automatic Call Distribution DNIS routing through IDC table 90
- Application Module Base 90
- Application Module Link (AML) messages 90
- Call Detail Recording 91
- Customer Controlled Routing 91
- Digit display for DNIS 91
- Host Enhanced Routing 91
- Meridian Link Interactions 91
- Meridian Mail 91
- Meridian MAX 91
- Multi-Frequency Signaling for KD3 for Spain 91
- Multi-Frequency Signaling for Socotel 91
- Network Automatic Call Distribution 92
- Symposium Call Center Server 92

Feature packaging 92
Feature implementation 92
Feature operation 97

Network Music 99

Contents 99
Feature Description 99
Operating parameters 99

Copyright © 1994–2007, Nortel Networks
Nortel Networks Confidential

Feature interactions 100
Feature packaging 100
Feature implementation 100
Feature operation 103

Network Wide Redundancy 105
Contents 105
Feature Description 105
Operating parameters 106
Feature interactions 106
Feature packaging 106
Feature implementation 106
Task summary list 106
Main scenario 106
Installation of IP telephone 107
Feature operation 107

New Flexible Code Restriction 109
Contents 109
Feature description 109
Operating parameters 110
Feature interactions 110
Access Restrictions 110
Attendant Blocking of Directory Number 111
Authorization Code Security Enhancement 111
Automatic Number Identification 111
Automatic Redial 111
Basic Alternate Route Selection (BARS), Network Alternate Route Selection (NARS), Coordinated Dialing Plan (CDP) 111
China - Flexible Feature Codes - Outgoing Call Barring, Enhanced Flexible Feature Codes - Outgoing Call Barring 111
Digital Private Network Signaling System (DPNSS1)/Digital Access Signaling System (DASS2) Uniform Dialing Plan (UDP) Interworking 111
Direct Inward System Access 112
Electronic Lock Network Wide/Electronic Lock on Private Lines 112
Federal Communications Commission Compliance for Equal Access 112
Forced Charge Account 112
Network Class of Service 112
Scheduled Access Restrictions 112
Feature packaging 112
Feature implementation 113
Task summary list 113
Feature operation 117

Copyright © 1994–2007, Nortel Networks
Nortel Networks Confidential

Night Key for Direct Inward Dialing (DID) Digit Manipulation 119
Contents 119
Feature description 119
Operating parameters 120
Feature interactions 120
Attendant Administration 120
Attendant Overflow Position 120
Automatic Set Relocation 120
Console Presentation Group Level Services 120
Feature packaging 121
Feature implementation 121
Task summary list 121
Feature operation 123

Night Restriction Classes of Service 125
Contents 125
Feature description 125
Operating parameters 125
Feature interactions 125
Call Waiting 125
Call Waiting Redirection 126
Camp-on, Forced 126
Override 126
Feature packaging 126
Feature implementation 126
Task summary list 126
Feature operation 128

Night Service 129
Contents 129
Feature description 129
Operating parameters 130
Feature interactions 131
Attendant Overflow Position 131
Attendant Position Busy 131
Automatic Wake Up 131
Call Forward Busy 131
Call Pickup Network Wide 131
Call Waiting Redirection 131
Calls Waiting in Attendant Queue 131
Departmental Listed Directory Number 132
Directory Number Expansion 132
Distinctive/New Distinctive Ringing 132
DPNSS1 Diversion 132

Copyright © 1994–2007, Nortel Networks
Nortel Networks Confidential

End-to-End Signaling 132
Equi-distribution Network Attendant Service Routing 132
Manual Line Service 132
Meridian 911 Call Abandon 132
Multi-Party Operations 132
Night Service 133
Night Service Enhancements 133
Recorded Overflow Announcement 133
Series Call 133
Trunk to Trunk Connection 133
Position Busy 133
Night Service by Time of Day (NSTD) interactions 133
Feature packaging 134
Feature implementation 134
Task summary list 134
Feature operation 135

Night Service Enhancements 137
Contents 137
Feature description 137
All Calls Remain Queued for Night Service 137
Recall to Night DN 138
Requeuing of Attendant Presented Calls 138
Camp-on from Inquiry Call (Station Camp-on) 138
Operating parameters 139
Camp-on from Inquiry Call (Station Camp-on) 139
Camp-on Indication 139
Night DN, Recall to Night Directory Number 140
Feature interactions 140
Attendant Clearing during Night Service 140
Attendant Interpositional Transfer 140
Attendant Overflow Position 140
Call Forward All Calls, Position Busy, Attendant Forward No Answer 141
Call Waiting, Call Forward All Calls, Hunting, Call Forward Busy 141
Call Waiting Redirection 141
Centralized Attendant Service 141
Dial Impulse Analog (500/2500-type) Telephone 141
Direct Inward System Access 141
Interposition Attendant Calls 142
Network Attendant Service, Centralized Attendant Service, Attendant Overflow Position 142
Night Service 142
Recall with Priority during Night Service, Network Wide 142
Trunk to Trunk Connection 142

Copyright © 1994–2007, Nortel Networks Nortel Networks Confidential

Feature packaging 142
Feature implementation 143
Task summary list 143
Feature operation 144
Night DN 144
External Call 144
Requeuing of Attendant Presented Calls 144
Call Handling in Night Service 145
Timed Reminder Time Outs during Night Service 147
Camp-on from Inquiry Call (Station Camp-on) 147
Recall Timing on Camp-on Calls 148

Night Service, Enhanced 151
Contents 151
Feature description 151
Normal Night Service 152
Group Night Service 152
Operating parameters 152
Feature interactions 153
AC15 Recall: Timed Reminder Recall 153
Call Waiting (CWT) 153
Direct Inward System Access (DISA) 153
Multi-Party Operations 153
Multi-Tenant service 153
Trunk Barring (Telephones) 153
Trunk to Trunk Barring 154
Warning Tone 154
Feature packaging 154
Feature implementation 154
Task summary list 154
Feature operation 155
Night number assignment from Night Number Table 155
Attendant console 157

No Hold Conference 159
Contents 159
Feature description 159
Operating parameters 161
Feature interactions 161
500/2500 Line Disconnect 161
Automatic Redial 161
Automatic Hold 161
Call Page Network Wide 161
Centralized Attendant Services 161
Conference - Six Party 162

Copyright © 1994–2007, Nortel Networks
Nortel Networks Confidential

Display of Calling Party Denied 162
Hot Line 162
IVR 162
Make Set Busy 162
Meridian 911 162
Meridian 911 Call Abandon 162
Music Trunk 162
Recorded Announcement Trunk 162
Off-Hook Alarm Security 162
Paging Trunk 162
System Speed Call list 162
Feature packaging 163
Feature implementation 163
Task summary list 163
Feature operation 165
No Hold Conference (NHC) 165
Conference-Autodial (CA) 165
Conference-Hot Line (CH) 166
Conference-Speed Call (CS) 166

North American Numbering Plan 167
Contents 167
Feature description 167
Interchangeable Numbering Plan Area 167
BARS/NARS 168
Direct Trunk Access and Alternate Route Selection 169
System upgrades 169
Operating parameters 169
Feature interactions 169
Autodial, Speed Call, Hot Line 169
Feature packaging 169
Feature implementation 169
Task summary list 169
Carrier Access Codes 171
Feature operation 172

Off-Hook Alarm Security 173
Contents 173
Feature description 173
Dial tone and interdigit timeout - call treatment 174
Forced Out of Service (FSVC) - call treatment 174
Multiple OHAS DNs 174
Operating parameters 176
Feature interactions 176
Call Redirection 176

Copyright © 1994–2007, Nortel Networks
Nortel Networks Confidential

Call Transfer 177
China - Flexible Feature Codes - Busy Number Redial, Enhanced Flexible Feature Codes 177
Conference 177
Electronic Switched Network, Trunk Access Codes 177
Last Number Redial, Stored Number Redial 177
Line Lockout 177
Multi-Party Operations 177
No Hold Conference 177
Room Status 178
Speed Call, Speed Call, System 178
Feature packaging 178
Feature implementation 178
Task summary list 178
Feature operation 179

Off-Hook Alarm Security Half Disconnect Enhancement 181
Contents 181
Feature description 181
Class of Service 183
OHAS security DN 183
OHAS Half Disconnect Timer 183
OHAS TTY record display 183
Operating parameters 184
Feature interactions 185
Call Redirection 185
Conference 186
Line Lockout 186
No Hold conference 186
Feature packaging 186
Feature implementation 186
Task summary list 186
Feature operation 188

Off-Premises Extension 189
Contents 189
Feature description 189
Operating parameters 189
Feature interactions 189
Feature packaging 189
Feature implementation 190
Feature operation 190

Off-Premises Station Analog Line Card 191
Contents 191

Copyright © 1994–2007, Nortel Networks
Nortel Networks Confidential

Feature description 191
Operating parameters 192
Feature interactions 193
Feature packaging 193
Feature implementation 193
Task summary list 193
Feature operation 198

On Hold on Loudspeaker 199
Contents 199
Feature description 199
Operating parameters 199
Feature interactions 200
Attendant Barge-in, Attendant Break-in, Attendant Busy Verify, Override 200
Audible Reminder of Held Call 200
Call Forward All Types 200
Call Transfer, Conference 200
Call Waiting, Camp-on, Ring Again 200
Conference Loops 200
Dial Access to Group Call 200
Group Hunt 200
Group Hunt 201
Held Call Clearing 201
Hold 201
Hot Line, Voice Call 201
Hot Line Two Way 201
Hunting , Call Forward 201
Music 201
Ring Hold LED Status 201
Single Call Ringing 201
Telephones - Analog (500/2500-type) 201
Feature packaging 202
Feature implementation 202
Task summary list 202
Feature operation 204
Proprietary Loudspeaker System 204
Speech Monitor System 204

On-Hook Dialing 207
Contents 207
Feature description 207
Operating parameters 207
Feature interactions 207
LOGIVOX Telephone 207
Feature packaging 207

Copyright © 1994–2007, Nortel Networks
Nortel Networks Confidential

Feature implementation 208
Feature operation 208

Optional Outpulsing Delay 209
Contents 209
Feature description 209
Operating parameters 209
Feature interactions 209
Feature packaging 210
Feature implementation 210
Feature operation 210

Outgoing Hold Timer Increase 211
Contents 211
Feature description 211
Operating parameters 214
Feature interactions 214
Outgoing Hold Toll Timer 214
Feature packaging 214
Feature implementation 214
Feature operation 215

Out-of-Service Unit (OOSU) 217
Contents 217
Feature description 217
Operating parameters 217
Feature interactions 217
Feature packaging 217
Feature implementation 218
Task summary list 218
Feature operation 219

Overlay 45 Limited Repeats 221
Contents 221
Feature description 221
Operating parameters 222
Feature interactions 222
Feature packaging 222
Feature implementation 222
Feature operation 222

Overlay Cache Memory 223
Contents 223
Feature description 223
Operating parameters 224
Conversion and upgrades 225

Copyright © 1994–2007, Nortel Networks
Nortel Networks Confidential

Feature interactions 225
Feature packaging 225
Feature implementation 225
Feature operation 225

Override 227
Contents 227
Feature description 227
Forced Camp-On and Priority Override 227
Operating parameters 228
Feature interactions 228
Attendant Break-In 228
Automatic Redial 228
Call Forward/Hunt Override using Flexible Feature Code 228
Call Party Name Display 228
Camp-On 228
Camp-On, Forced 229
Charge Account and Calling Party Number 229
China - Attendant Monitor 229
Conference 229
Do Not Disturb 229
Group Hunt 229
Hot Line 229
Make Set Busy 230
Multi-Party Operations 230
Network Intercom 230
Night Restriction Classes of Service 230
On Hold on Loudspeaker 230
Override, Enhanced 230
Priority Override 230
Periodic Camp-on Tone 230
Phantom Terminal Numbers, Call Forward 230
Ring Again 230
Uninterrupted Line Connections 231
Feature packaging 231
Feature implementation 231
Task summary list 231
Feature operation 233

Override, Enhanced 235
Contents 235
Feature description 235
Forced Camp-On 235
Priority Override 236
Operating parameters 238

Copyright © 1994–2007, Nortel Networks
Nortel Networks Confidential

Feature interactions 240
Attendant Break-In 240
Attendant calls, Automatic Call Distribution 240
Call Hold Deluxe, Call Hold Permanent 240
Camp-On 240
Conference calls 240
China - Attendant Monitor 240
Data calls 240
Digit Display 241
Do Not Disturb 241
Hold 241
Make Set Busy 241
Multi-Party Operations 241
Operator Call Back 241
Override 241
Ring Again 241
Feature packaging 242
Feature implementation 242
Task summary list 242
Feature operation 246
Example 1-Enhanced Override with an analog (500/2500-type) telephone 248
Example 2-Enhanced Override with a Meridian 1 proprietary telephone 250
Example 3-Enhanced Override from a consultation call with an analog (500/2500-type) telephone 252
Example 4-Enhanced Override from a consultation call with a Meridian 1 proprietary telephone 254
Operation with various combinations of Forced Camp-On and Priority Override 256
Enhanced Override from a conference call with any telephone 258

Override, Priority 259

Contents 259
Feature description 259
Operating parameters 260
Feature interactions 261
Attendant calls 261
Automatic Call Distribution (ACD) 261
Conference calls 261
Data calls 261
Digit display 261
Do Not Disturb (DND) 262
Hold 262
Make Set Busy (MSB) 262
Multi-Party Operations (MPO) 262

Copyright © 1994–2007, Nortel Networks
Nortel Networks Confidential

Operator Call Back 262
Override 262
Ring Again 262
Feature packaging 262
Feature implementation 263
Task summary list 263
Feature operation 266

Paging 269
Contents 269
Feature description 269
Operating parameters 270
Feature interactions 270
Call Forward All Calls 270
Conference 271
Multi-Party Operations 271
Private Line Routes 271
Feature packaging 271
Feature implementation 271
Task summary list 271
Feature operation 274

Partial Dial Timing 275
Contents 275
Feature description 275
Operating parameters 276
Feature interactions 276
Feature packaging 276
Feature implementation 276
Feature operation 276

Periodic Camp-on Tone 277
Contents 277
Feature description 277
Operating parameters 277
Feature interactions 277
Attendant Break-In, Attendant Busy Verify, Override 277
Semi-Automatic Camp-On 278
Feature packaging 278
Feature implementation 278
Task summary list 278
Feature operation 279

Periodic Clearing 281
Contents 281
Feature description 281

Copyright © 1994–2007, Nortel Networks
Nortel Networks Confidential

Operating parameters 281
Feature interactions 282
AC15 Recall: Timed Reminder Recall 282
Generic XFCOT Software Support 282
Feature packaging 282
Feature implementation 282
Feature operation 282

Periodic Clearing Enhancement 283
Contents 283
Feature description 283
Operating parameters 283
Feature interactions 284
Called Party Disconnect Control, Toll Operator Break-in 284
Feature packaging 284
Feature implementation 284
Feature operation 284

Periodic Clearing on RAN, Meridian Mail, ACD, and Music 285
Contents 285
Feature description 285
Operating parameters 285
Feature interactions 285
Called Party Disconnect Control 285
Centrex Switchhook flash 286
Integrated Services Digital Network (ISDN) Basic Rate Interface 286
MFC and MFE signaling 286
Toll Operator Break-In 286
Feature packaging 286
Feature implementation 286
Task summary list 286
Feature operation 286

Periodic Pulse Metering 287
Contents 287
Feature description 287
Operating parameters 288
Feature interactions 288
AC15 Recall: Transfer from Norstar 288
Advice of Charge for EuroISDN 288
Attendant Administration 288
Call Detail Recording 288
Call Forward All Calls, Call Forward No Answer, Hunting 289
Call Park 289
Call Pickup 289

Copyright © 1994–2007, Nortel Networks
Nortel Networks Confidential

Call Transfer 289
Camp-On 289
Conference - Attendant 289
Conference - Three-party/Six-party 290
Consultation calls 290
Digital Trunk Interface (DTI) - Commonwealth of Independent States (CIS) 290
Italian Central Office Special Services 290
Italian Periodic Pulse Metering 290
Recall to Same Attendant 290
Tandem Switching 291
Virtual Network Service 291
1.5 Mbps Digital Trunk Interface 291
2 Mbps Digital Trunk Interface 291
Feature packaging 291
Feature implementation 291
Task summary list 291
Feature operation 292
Marking a Call as Metered 293
Meter Recall 293

Personal Call Assistant 295

Contents 295
Feature description 295
PCA scenarios 296
Operating parameters 301
Feature interactions 302
Automatic Redial 302
Automatic Wake Up 302
Automatic Wake up FFC Delimiter 302
Call Detail Recording 302
Call Detail Recording on redirected incoming calls 303
Call Forward by Call Type, Call Forward No Answer, Second Level 303
Call Forward, Remote (Attendant and Network Wide) 303
Call Waiting Redirection 304
Calling Party Name Display Denied 304
China - Attendant Monitor 304
Controlled Class of Service 304
Controlled Class of Service, Enhanced 304
Digital Private Signaling System 1 (DPNSS1) Executive Intrusion 305
Digital Trunk Interface (DTI) - Commonwealth of Independent States (CIS) 305
Directory Number Expansion 305
Display Calling Party Denied 305
Electronic Lock Network Wide/Electronic Lock on Private Lines 306
Group Call 306

Copyright © 1994–2007, Nortel Networks
Nortel Networks Confidential

Group Hunt 306
Hunt 306
Last Number Redial 307
Loop Restriction 307
Meridian 911 307
Message Registration 307
Privacy 308
Privacy Override 308
Privacy Release 308
Remote Call Forward 308
Three Wire Analog Trunk - Commonwealth of Independent States (CIS) 308
Voice Call 308
Feature packaging 308
Feature implementation 309
Task summary list 309
Feature operation 311
Activating and deactivating PCA at the user level 311
Verifying PCA status 312

Personal Directory, Callers List, and Redial List 315
Contents 315
Feature description 315
Personal Directory 316
Callers List 317
Redial List 319
Password protection 319
Operating parameters 320
IP Phone Application Server administration 320
Alarms 321
Feature interactions 321
Branch Office 321
Multiple Appearance DN 321
IP Network-wide Virtual Office 322
Feature packaging 322
Feature implementation 322
Feature operation 323

Phantom Terminal Numbers 325
Contents 325
Feature description 325
Operating parameters 325
Feature interactions 326
Attendant Administration 326
Attendant Blocking of Directory Number 326
Automatic Call Distribution 326

Copyright © 1994–2007, Nortel Networks
Nortel Networks Confidential

Call Detail Recording 326
Call Forward All Calls 326
Call Forward and Busy Status 327
Call Forward, Internal Calls 327
Call Forward/Hunt Override Via Flexible Feature Code 327
Call Forward, Remote (Attendant and Network Wide) 327
Hot Line 327
Call Forward, Internal Hunting, Manual Line Service, Multiple Appearance, Multiple Appearance Directory Number, Redirection Prime, Station Category Index 328
DPNSS1 Diversion 328
Meridian Link 328
Meridian Mail and CallPilot 328
Network Ring Again 328
Override 328
Recorded Announcement for Calls Diverted to External Trunks 328
Remote Call Forward 328
Ring Again on No Answer 329
Secretarial Filtering 329
Set-Based Administration Enhancements 329
Virtual Office 329
Feature packaging 329
Feature implementation 329
Task summary list 329
Feature operation 331

Position Busy with Call on Hold 333
Contents 333
Feature description 333
Operating parameters 333
Feature interactions 333
Attendant Forward No Answer 333
Scheduled Access Restriction 333
Feature packaging 334
Feature implementation 334
Feature operation 334

Predictive Dialing 335
Contents 335
Feature description 335
Operating parameters 336
Feature interactions 337
Call Hold Deluxe, Call Hold Permanent 337
Call Transfer by Meridian 1 proprietary telephone 337
Call Transfer by Analog (500/2500-type) Telephone 337

Copyright © 1994–2007, Nortel Networks
Nortel Networks Confidential

Command and Status Link 338
Trunks 338
Feature packaging 338
Feature implementation 338
Task summary list 338
Feature operation 348

Pretranslation and System Speed Call Enhancement 349
Contents 349
Feature description 349
BPSS = NO 351
BPSS = YES 352
Operating parameters 352
Feature interactions 352
Feature packaging 353
Feature implementation 353
Feature operation 353

Pretranslation 355
Contents 355
Feature description 355
Setting up dialing plans and Pretranslation Tables 357
Step 1 - Identify the numbering plan 357
Step 2 - Determine access restrictions 358
Step 3 - Determine dialing requirements and create Pretranslation Tables 359
Operating parameters 364
Feature interactions 365
Authorization Code Security Enhancement 365
Automatic Redial 365
Automatic Trunk Maintenance, Private Line Telset Messaging 365
Automatic Wake Up 365
Call Detail Recording 365
Call Forward 365
Charge Account, Forced 365
Controlled Class of Service, Enhanced 366
Digit Display 366
Digital Private Network Signaling System (DPNSS1)/Digital Access Signaling System (DASS2) Uniform Dialing Plan (UDP) Interworking 366
Direct Inward System Access 366
Direct Private Network Access 366
Electronic Switched Network 366
Flexible Feature Codes 366
Forced Charge Account 366
Meridian Hospitality Voice Services 366
Meridian Link Calls 367

Copyright © 1994–2007, Nortel Networks
Nortel Networks Confidential

Special Prefix 367
Speed Call, System Speed Call 367
User Selectable Call Redirection 367
Feature packaging 367
Feature implementation 367
Task summary list 367
Feature operation 370

Preventing Reciprocal Call Forward 371
Contents 371
Feature description 371
Operating parameters 372
Feature interactions 372
Network Call Redirection 372
Remote Call Forward 372
Feature packaging 372
Feature implementation 372
Feature operation 372

Prime Directory Number 375
Contents 375
Feature description 375
Operating parameters 375
Feature interactions 375
Automatic Wake Up FFC Delimiter 375
Hot Line 376
Feature packaging 376
Feature implementation 376
Feature operation 376

Privacy 377
Contents 377
Feature description 377
Operating parameters 377
Feature interactions 377
Automatic Redial (ARDL) 377
Bridging 378
Call Hold, Permanent 378
Group Call 378
Multiple Appearance Directory Number 378
Privacy Override 378
Feature packaging 378
Feature implementation 378
Feature operation 378

Copyright © 1994–2007, Nortel Networks
Nortel Networks Confidential

Privacy Override 379
Contents 379
Feature description 379
Operating parameters 379
Feature interactions 380
Automatic Redial (ARDL) 380
Call Park, Call Transfer 380
Conference 380
Exclusive Hold 380
Multiple Appearance Directory Number - Mixed Mode 380
Privacy 380
Feature packaging 380
Feature implementation 380
Feature operation 381

Privacy Release 383
Contents 383
Feature description 383
Operating parameters 383
Feature interactions 383
Automatic Redial 383
Call Park 384
China - Attendant Monitor 384
Dial Access to Group Calls, Group Call 384
Exclusive Hold 384
Multiple Appearance Directory Number 384
Music, Enhanced 384
Ring and Hold Lamp Status 384
Feature packaging 384
Feature implementation 384
Feature operation 385

Private Line Service 387
Contents 387
Feature description 387
Operating parameters 388
Feature interactions 388
Automatic Line Selection 388
Automatic Redial 388
Call Park 389
Calling Party Privacy 389
China - Attendant Monitor 389
Collect Call Blocking 389
Do Not Disturb 389

Copyright © 1994–2007, Nortel Networks
Nortel Networks Confidential

Flexible Feature Code Boss Secretarial Filtering 389
Hot Line 389
Station-to-Station Calling 389
Feature packaging 389
Feature implementation 389
Task summary list 389
Feature operation 391

Public Switched Data Service 393
Contents 393
Feature description 393
Operating parameters 394
End-to-End DTI network 394
Feature interactions 394
ISDN PRI 394
Related features 394
Feature packaging 396
Feature implementation 396
Feature operation 396
Originating data calls 396
Receiving data calls 396

Pulsed E and M DTI2 Signaling 397
Contents 397
Feature description 397
Operating parameters 397
Feature interactions 398
China Number 1 signaling 398
Digital Trunk Interface (DTI) - Commonwealth of Independent States (CIS) 398
2 Mbps Digital Trunk Interface 398
MFE for Socotel 398
MFC/Semi-compelled MFC 398
New Toll Call Identification 398
Periodic Pulse Metering 398
Lockout 398
Feature packaging 398
Feature implementation 399
Task summary list 399
Feature operation 403

Radio Paging, X11 405
Contents 405
Feature description 405
Local Radio Paging 406
Remote Radio Paging 407

Copyright © 1994–2007, Nortel Networks
Nortel Networks Confidential

Directory number to Paging System Access code translation 409
Paging indications 409
Dialing plans 410
Multiple paging systems 410
Radio Paging system signals 411
Paging time limits 412
Methods of operation 413
Parallel paging 414
Initiating a paging call 414
Modes of operation 415
Terminating a paging call 416
Operating parameters 416
Feature interactions 417
Access restrictions 417
Class of Service restrictions 418
Trunk Group Access Restrictions codes 418
Trunk Barring 418
Attendant Recall 418
Automatic Call Distribution 418
Automatic Dialing 419
Automatic Timed Reminders 419
Barge-in 419
Basic Automatic Route Selection 419
Break-in 419
Busy Verify 420
Call Detail Recording 420
CDR on incoming or outgoing calls to Radio Paging system 420
CDR on paging route 420
Call Forward, Call Forward All Calls 420
Call Forward No Answer 421
Call Transfer 421
Central Office/Public Exchange trunks 421
Conference 421
Dial 1 421
Digit Display 421
Meridian 1 proprietary sets 421
Attendant consoles 421
Direct Inward Dialing 422
Direct Inward System Access 422
Do Not Disturb 422
Enhanced Flexible Hotline 422
Group Hunting 422
Hold 422

Copyright © 1994–2007, Nortel Networks
Nortel Networks Confidential

Last Number Redial 422
Multifrequency Compelled Signaling (MFC) 422
Multiple Appearance Directory Number 423
Multiple Customer Operation 423
Multi-party Operations (MPO) 423
Network Automatic Route Selection (NARS) 423
Night Service 423
Override 423
Ring Again 424
Slow Answer Recall 424
Slow Answer Recall Modification (SLAM) 424
Speed Call 424
Station-to-station calling 425
Switchhook Flash 425
Tenant Service 425
TIE trunks 425
Traffic Measurements 425
Trunk Group Busy Indication 425
Feature packaging 426
Feature implementation 426
Adding a Radio Paging System 426
Task summary list 426
Adding a Remote Radio Paging Flexible Feature Code 433
Task summary list 433
Feature operation 435
Automatic pre-selection 435
Automatic post-selection 436
Manual pre-selection 437
Manual post-selection 438
Answering the paging call 439
Pre-selection and post-selection 440

Radio Paging Product Improvements 441
Contents 441
Feature description 441
Operating parameters 441
Feature interactions 442
Call Detail Recording Enhancement 442
Display of Calling Party Denied 443
Network Attendant Services 443
Slow Answer Recall Modification 443
Feature packaging 443
Feature implementation 444
Task summary list 444

Copyright © 1994–2007, Nortel Networks
Nortel Networks Confidential

Feature operation 445

Radio Paging Product Improvement Continuation 447
Contents 447
Feature description 447
Pager Display 447
Pretranslation 448
Pagers installed in the paging rack 448
Operating parameters 449
Feature interactions 451
Feature packaging 451
Feature implementation 451
Task summary list 451
Feature operation 454

Recall after Parking 455
Contents 455
Feature description 455
Operating parameters 455
Feature interactions 455
Call Park 455
Feature packaging 456
Feature implementation 456
Feature operation 456

Recall to Same Attendant 457
Contents 457
Feature description 457
Operating parameters 458
Feature interactions 458
AC15 Recall: Timed Reminder Recall 458
Attendant Forward No Answer 458
Attendant Overflow Position 458
Attendant Position Busy 458
Automatic Call Distribution 458
Call Forward No Answer 459
Call Waiting Options 459
Centralized Attendant Service 459
Flexible Attendant Call Waiting Thresholds 459
Group Hunt 459
Idle Extension Notification 459
Multi-Party Operations 459
Multi-Tenant Service 460
Network Attendant Service 460
Periodic Pulse Metering 460

Copyright © 1994–2007, Nortel Networks
Nortel Networks Confidential

Ring Again on No Answer 460
Tenant Service 460
Voice Messaging 460
Feature packaging 460
Feature implementation 460
Feature operation 461

Recall with Priority during Night Service 463
Contents 463
Feature description 463
Operating parameters 463
Feature interactions 463
Feature packaging 463
Feature implementation 464
Feature operation 464

Recorded Announcement 465
Contents 465
Feature description 465
Operating parameters 466
Feature interactions 466
Conference, No Hold Conference 466
Collect Call Blocking 466
FCC Compliance for DID Answer Supervision 466
Group Hunt 466
Recovery on Misoperation of Attendant Console 466
Source Included when Attendant Dials 467
Trunk Traffic Reporting Enhancement 467
Feature packaging 467
Feature implementation 467
Task summary list 467
Feature operation 469

Recorded Announcement Broadcast 471
Contents 471
Feature description 471
Incremental Software Management limits 472
RAN Signaling 473
Multi-Channel RAN Machine Types and Modes 474
Message Staging 478
Music on Waiting 479
Traffic Study Option 479
Operating parameters 481
Feature interactions 482
Answer Supervision 482

Copyright © 1994–2007, Nortel Networks
Nortel Networks Confidential

Automatic Call Distribution, Recorded Overflow Announcement 483
Automatic Wake Up 483
Incremental Software Management 483
INIT ACD Queue Call Restore 483
Integrated Call Center Management 483
Music Broadcast 484
Feature packaging 484
Feature implementation 484
Task summary list 484
Feature operation 494

Recorded Overflow Announcement 495
Contents 495
Feature description 495
Operating parameters 495
Feature interactions 497
Automatic Call Distribution (ACD) 497
Call Transfer 497
Night Service 497
Feature packaging 497
Feature implementation 497
Task summary list 497
Feature operation 499

Recorded Telephone Dictation 501
Contents 501
Feature description 501
Operating parameters 501
Feature interactions 501
Multi-Party Operations 501
Conference 501
Feature packaging 502
Feature implementation 502
Task summary list 502
Feature operation 503

Recovery on Misoperation of Attendant Console 505
Contents 505
Feature description 505
Operating parameters 505
Feature interactions 505
Call Forward All Calls, Call Forward Busy, Call Forward by Call Type, Call Forward External Deny, Call Forward, Internal Calls, Call Forward No Answer, Call Forward No Answer Second Level, Hunting 505
Electronic Switched Network 506

Copyright © 1994–2007, Nortel Networks
Nortel Networks Confidential

Music on Hold 506
Recorded Announcement 506
Through Dialing 506
Feature packaging 506
Feature implementation 506
Feature operation 507
Misoperation of Release key and loop keys 507
Misoperation of Autohold on the loop key 508
Misoperation of the Release Source/Release Destination key 508

Reference Clock Switching 509
Contents 509
Feature description 509
Operating parameters 510
Feature interactions 510
Feature packaging 511
Feature implementation 511
Task summary list 511
Feature operation 511

Remote Call Forward 513
Contents 513
Feature description 513
Operating parameters 513
Feature interactions 514
Attendant Administration 514
Call Forward Destination Deactivation 514
Call Forward, Internal Calls 514
China - Flexible Feature Codes - Outgoing Call Barring, Enhanced Flexible Feature Codes - Outgoing Call Barring 515
Multiple Appearance Directory Number 515
Phantom Terminal Numbers (TNs) 515
Preventing Reciprocal Call Forward 515
Set-Based Administration Enhancements 515
2500 Telephone Features 515
Feature packaging 515
Feature implementation 516
Task summary list 516
Feature operation 518

Remote Radio Paging 521
Contents 521
Feature description 521
Post Selection Access to Remote Radio Paging 522
Operating parameters 522

Copyright © 1994–2007, Nortel Networks
Nortel Networks Confidential

Feature interactions 523
Feature packaging 523
Feature implementation 523
Task summary list 523
Feature operation 524

Restricted Call Transfer 525
Contents 525
Feature description 525
Operating parameters 525
Feature interactions 525
Feature packaging 525
Feature implementation 526
Feature operation 526

Restricted Direct Inward Dialing Class of Service 527
Contents 527
Feature description 527
Operating parameters 527
Feature interactions 528
Class of Service Restrictions 528
Feature packaging 528
Feature implementation 528
Feature operation 528

Reverse Dial on Routes and Telephones 529
Contents 529
Feature description 529
Operating parameters 530
Feature interactions 530
Feature packaging 530
Feature implementation 530
Feature operation 530

Ring Again 531
Contents 531
Feature description 531
Operating parameters 531
Feature interactions 532
Attendant Blocking of Directory Number 532
Attendant Overflow Position 532
Automatic Set Relocation 532
Basic/Network Alternate Route Selection (BARS/NARS) 532
Call Forward/Hunt Override Via Flexible Feature Code 532
Call Waiting 532
Calling Party Privacy 532

Copyright © 1994–2007, Nortel Networks
Nortel Networks Confidential

Charge Account and Calling Party Number 532
China - Flexible Feature Codes - Outgoing Call Barring, Enhanced Flexible Feature Codes - Outgoing Call Barring 533
Conference 533
Dial Access to Group Calls, Group Call 533
Enhanced Override 533
Group Hunt 533
Idle Extension Notification 533
ISDN QSIG/EuroISDN Call Completion 533
Multi-Party Operations 533
Network Intercom 533
On Hold on Loudspeaker 534
Override, Enhanced Override 534
Priority Override 534
Preference Trunk Usage 534
Trunk Route Optimization - Before Answer 534
Feature packaging 534
Feature implementation 534
Task summary list 534
Feature operation 535
Meridian 1 proprietary telephones 535
M2317 telephone 535
Analog (500/2500-type) telephones 536

Ring Again on No Answer 537
Contents 537
Feature description 537
Operating parameters 538
Feature interactions 538
Attendant Recall 538
Call Forward All Calls, Call Forward No Answer 538
Call Forward/Hunt Override using Flexible Feature Code 538
Group Hunting 539
Hunting 539
Intercept Treatment 539
Intercept to Attendant 539
ISDN QSIG/EuroISDN Call Completion 539
Multiple Appearance Directory Number 539
Network Intercom 539
Phantom Terminal Numbers (TNs) 539
Queued Calls 539
Recall to Attendant due to Misoperation 539
Recall to Same Attendant 540
Multiple Appearance Directory Number 540

Copyright © 1994–2007, Nortel Networks
Nortel Networks Confidential

Telephones - M2317 and M3900 540
Trunk Route Optimization - Before Answer 540
Feature packaging 540
Feature implementation 540
Task summary list 540
Feature operation 541
Meridian 1 proprietary telephones 541
Analog (500/2500-type) telephones 542

Ring and Hold Lamp Status 545
Contents 545
Feature description 545
Operating parameters 546
Feature interactions 546
Privacy Release 546
Feature packaging 546
Feature implementation 546
Feature operation 546

Ringback Tone from Meridian 1 Enhancement 547
Contents 547
Feature description 547
Operating parameters 547
Feature interactions 547
Feature packaging 547
Feature implementation 548
Feature operation 548

Ringing Change Key 549
Contents 549
Feature description 549
Operating parameters 549
Feature interactions 550
Attendant Blocking of Directory Number 550
Directory Number Delayed Ringing 550
Network Intercom 550
Feature packaging 550
Feature implementation 550
Feature operation 551

Ringing instead of Buzzing on Digital Telephones 553
Contents 553
Feature description 553
Operating parameters 554
Feature interactions 554
ACD calls 554

Copyright © 1994–2007, Nortel Networks
Nortel Networks Confidential

Hunting 554
Short Buzz for Digital Telephones 554
Third Party Applications 554
Tones, Flexible Incoming 554
Feature packaging 555
Feature implementation 555
Feature operation 555

Room Status **557**
Contents 557
Feature description 557
Operating parameters 559
Feature interactions 559
Attendant Administration 559
Automatic Wake Up 559
Automatic Wake Up FFC Delimiter 560
Controlled Class of Service 560
Hot Line 560
Maid ID 560
Multiple Tenant 560
Off-Hook Alarm Security 560
Feature packaging 560
Feature implementation 560
Task summary list 560
Feature operation 562

Copyright © 1994–2007, Nortel Networks
Nortel Networks Confidential

How to get help

This chapter explains how to get help for Nortel products and services.

Getting help from the Nortel web site

The best way to get technical support for Nortel products is from the Nortel Technical Support web site: www.nortel.com/support

This site provides quick access to software, documentation, bulletins, and tools to address issues with Nortel products. From this site, you can:

- download software, documentation, and product bulletins
- search the Technical Support Web site and the Nortel Knowledge Base for answers to technical issues
- sign up for automatic notification of new software and documentation for Nortel equipment
- open and manage technical support cases

Getting help over the telephone from a Nortel Solutions Center

If you do not find the information you require on the Nortel Technical Support web site, and you have a Nortel support contract, you can also get help over the telephone from a Nortel Solutions Center.

In North America, call 1-800-4NORTEL (1-800-466-7835).

Outside North America, go to the following web site to obtain the telephone number for your region: www.nortel.com/callus

Getting help from a specialist by using an Express Routing Code

To access some Nortel Technical Solutions Centers, you can use an Express Routing Code (ERC) to quickly route your call to a specialist in your Nortel product or service. To locate the ERC for your product or service, go to: www.nortel.com/erc

Copyright © 1994–2007, Nortel Networks
Nortel Networks Confidential

Getting help through a Nortel distributor or reseller

If you purchased a service contract for your Nortel product from a distributor or authorized reseller, contact the technical support staff for that distributor or reseller.

Copyright © 1994–2007, Nortel Networks
Nortel Networks Confidential

Features and Software options

Package Name	Number	Mnemonic	Release
1.5 Mbit Digital Trunk Interface	75	PBXI	5
• Hong Kong Digital Trunk Interface • Reference Clock Switching (See also packages 129, 131, and 154)			
16-Button Digitone/Multifrequency Telephone	144	ABCD	14
• 16-Button Digitone/Multifrequency Operation			
2 Mbit Digital Trunk Interface	129	DTI2	10
• DID Recall features on DTI2 for Italy – DID Offering • DID Recall features on DTI2 for Italy – DID Recall • Italian Central Office Special Services (see also packages 131, and 157) • Italian Periodic Pulse Metering • Pulsed E&M DTI2 Signaling • Reference Clock Switching (see also packages 75, 131, and 154) • R2MFC 1.5 Mbps DTI • 2 Mbps Digital Trunk Interface • 2 Mbps Digital Trunk Interface Enhancements: — Alarm Handling on DID Channels			

Copyright © 1994–2007, Nortel Networks
Nortel Networks Confidential

Package Name	Number	Mnemonic	Release
— Alarm Handling on Incoming COT/DID Calls			
— Call Clearance			
— Clock Synchronization			
— DID Call Offering			
— Disable Out-of-Service Alarm State			
— Fault Signal			
— Incoming Seizure			
— Outpulsing Delay			
— Release Control			
— Signal Recognition			
— Trunk Entering Alarm Status/Trunk Pack Exiting Alarm Status			
— 64 Kbps Alarm Indication Signal (AIS) Handling			
2.0 Mb/s Primary Rate Interface	154	PRI2	14
• Reference Clock Switching (see also packages 75, 129, and 131)			
2500 Set Features	18	SS25	1
• Call Hold, Permanent			
• 2500 Set Features			
500 Set Dial Access to Features	73	SS5	4
• 500 Set Features			
• 500/2500 Line Disconnect			
AC15 Recall	236	ACRL	20
• AC15 Recall: Timed Reminder Recall			
• AC15 Recall: Transfer from Norstar			
• AC15 Recall: Transfer from Meridian 1			
• Access Restrictions			

Copyright © 1994–2007, Nortel Networks
Nortel Networks Confidential

Package Name	Number	Mnemonic	Release
ACD/CDN Expansion	388	ACDE	25.40
• ACD/CDN Expansion			
Administration Set	256	ADMINSET	21
• Set-based Administration Enhancements			
Advanced ISDN Network Services	148	NTWK	13
• Advice of Charge – Charging Information and End of Call for NUMERIS Connectivity (see also package 101)			
• Advice of Charge Real-time Supplementary Services for NUMERIS and SWISSNET (see also package 101)			
• Alternative Conference PAD Levels			
• Alternative Loss Plan			
• Alternative Loss Plan for China			
Analog Calling Line Identification	349	ACLI	25
• CLID on Analog Trunks for Hong Kong (A-CLID)			
Aries Digital Sets	170	ARIE	14
• Meridian Communications Adapter			
• Meridian Modular Telephones			
Attendant Administration	54	AA	1
• Attendant Administration			
Attendant Alternative Answering	174	AAA	15
• Attendant Alternative Answering			
• Attendant Barge-In			

Copyright © 1994–2007, Nortel Networks
Nortel Networks Confidential

Package Name	Number	Mnemonic	Release
Attendant Announcement	384	AANN	25.40
• Attendant Announcement			
Attendant Break-In/Trunk Offer	127	BKI	1
• Attendant Break-In			
• Break-In busy Indication and Prevention			
• Break-In to Inquiry Calls			
• Break-In to Lockout Set Denied			
• Break-In with Secrecy			
• China Number 1 Signaling – Toll Operator Break-In (see also Package 131)			
• Network Individual Do Not Disturb (see also packages 9, and 159			
• Attendant Busy Verify			
• Attendant Call Selection			
• Attendant Calls Waiting Indication			
• Attendant Consoles			
• Attendant Delay on Hold			
• Attendant Display of Speed Dial or Autodial			
Attendant Forward No Answer	134	AFNA	14
• Attendant Forward No Answer			
• Attendant Forward No Answer Expansion			
• Attendant Incoming Call Indicators			
• Attendant Interpositional Transfer			
• Attendant Lockout			

Copyright © 1994–2007, Nortel Networks
Nortel Networks Confidential

Package Name	Number	Mnemonic	Release
Attendant Overflow Position • Attendant Overflow Position • Attendant Position Busy • Attendant Recall • Attendant Recall with Splitting	56	AOP	1
Attendant Remote Call Forward • Call Forward, Remote (Network and Attendant Wide) • Attendant Secrecy • Attendant Splitting • Attendant Trunk Group Busy Indication • Audible Reminder of Held Calls	253	ARFW	20
Autodial Tandem Transfer • Autodial Tandem Transfer	258	ATX	20
Automated Modem Pooling	78	AMP	5
Automatic Answerback • Automatic Answerback • Automatic Call Distribution Answer Time in Night Service • Automatic Call Distribution Call Delays (see also package 40) • Automatic Call Distribution Call Priority (see also package 40) • Automatic Call Distribution Call Waiting Thresholds (see also packages 40 and 41) • Automatic Call Distribution Calls on Hold (see also package 40) • Automatic Call Distribution Dynamic Queue Threshold (see also package 40)	47	AAB	1

Copyright © 1994–2007, Nortel Networks
Nortel Networks Confidential

Package Name	Number	Mnemonic	Release
Automatic Call Distribution Enhanced Overflow	178	EOVF	15
• Automatic Call Distribution Enhanced Overflow			
Automatic Call Distribution Load Management	43	LMAN	1
• Automatic Call Distribution Load Management Reports			
Automatic Call Distribution Night Call Forward without Disconnect Supervision	289	ADSP	23
• Call Processor Input/Output)			
Automatic Call Distribution Package C	42	ACDC	1
• Automatic Call Distribution Report Control (see also package 50)			
• 500/2500 Line Disconnect			
Automatic Call Distribution Package D, Auxiliary Link Processor	51	LNK	2
• ACD Package D Auxiliary Processor Link			
Automatic Call Distribution Package D, Auxiliary Security	114	AUXS	12
• ACD-D Auxiliary Security			
Automatic Call Distribution Package D	50	ACDD	2
• Automatic Call Distribution Report Control (see also package 42)			
• Automatic Call Distribution Threshold Visual Indication (see also packages 40 and 41)			
Automatic Call Distribution, Account Code	155	ACNT	13
• Automatic Call Distribution Activity Code			

Copyright © 1994–2007, Nortel Networks
Nortel Networks Confidential

Package Name	Number	Mnemonic	Release
Automatic Call Distribution, Package A	45	ACDA	1
• Automatic Call Distribution			
Automatic Call Distribution, Package B	41	ACDB	1
• Automatic Call Distribution Call Waiting Thresholds (see also packages 40, and 131)			
• Automatic Call Distribution Least Call Queuing			
• Automatic Call Distribution Threshold Visual Indication (see also packages 40, and 131)			
Automatic Call Distribution, Priority Agent	116	PAGT	12
• Automatic Call Distribution Priority Agent			
Automatic Call Distribution, Timed Overflow Queuing	111	TOF	10
• ACD Timed Overflow			
• Automatic Gain Control Inhibit			
• Automatic Guard Detection			
• Automatic Hold			
Automatic ID of Outward Dialing	3	AIOD	1
Automatic Installation (Option 11 only)	200	AINS	16
• Automatic Installation			
Automatic Line Selection	72	LSEL	4
• Automatic Line Selection			
Automatic Number Identification Route Selection	13	ANIR	1
• Automatic Number Identification Route Selection			

Copyright © 1994–2007, Nortel Networks
Nortel Networks Confidential

Package Name	Number	Mnemonic	Release
Automatic Number Identification	12	ANI	1
• Automatic Number Identification • Automatic Number Identification on DTI • Automatic Preselection of Prime Directory Number			
Automatic Redial	304	ARDL	22
• Automatic Redial • Automatic Timed Reminders			
Automatic Wake-Up	102	AWU	10
• Automatic Wake Up			
Auxiliary Processor Link	109	APL	10
• Auxiliary Processor Link • Auxiliary Signaling • B34 Dynamic Loss Switching (see also packages 164 and 203)			
Background Terminal	99	BGD	10
• Background Terminal Facility			
Basic Alternate Route Selection	57	BARS	1
• Network Alternate Route Selection/Basic Alternate Route Selection Enhancement – Local Termination (see also package 58)			
Basic Authorization Code	25	BAUT	1
• Basic Authorization Code			

Copyright © 1994–2007, Nortel Networks
Nortel Networks Confidential

Package Name	Number	Mnemonic	Release
Basic Automatic Call Distribution	40	BACD	1
• Automatic Call Distribution Alternate Call Answer			
• Automatic Call Distribution Call Delays (see also package 131)			
• Automatic Call Distribution Call Priority (see also package 131)			
• Automatic Call Distribution Call Waiting Thresholds (see also packages 41, and 131)			
• Automatic Call Distribution Calls on Hold (see also package 131)			
• Automatic Call Distribution Dynamic Queue Threshold (see also package 131)			
• Automatic Call Distribution Enhancements			
• Automatic Call Distribution in Night Service			
• Automatic Call Distribution Threshold Visual Indication (see also packages 41, and 131)			
• INIT Automatic Call Distribution (ACD) Queue Call Restore			
Basic Call Processing	0	BASIC	1
Basic Queuing	28	BQUE	1
• Basic Queuing			
Basic Rate Interface	216	BRI	18
• Integrated Services Digital Network Basic Rate Interface (see also packages 216, and 235)			
Basic Routing	14	BRTE	1
• Basic Routing			
Boss Secretary Filtering (FFC activation)	198	FTCSF	15
• Flexible Feature Code Boss Secretarial Filtering			

Copyright © 1994–2007, Nortel Networks
Nortel Networks Confidential

Package Name	Number	Mnemonic	Release
BRI line application	235	BRIL	18
• Integrated Services Digital Network Basic Rate Interface (see also packages 216, and 233)			
• ISDN Basic Rate Interface Connected Line Presentation/Restriction			
• Bridging			
• Busy Lamp Field Array			
Business Network Express	367	BNE	25
• Business Network Express/EuroISDN Call Diversion			
• Business Network Express/EuroISDN Explicit Call Transfer			
• Business Network Express/Name and Private Number Display			
Busy Tone Detection	294	BTD	21
• China Phase II – Busy Tone Detection			
• Busy Tone Detection for Asia Pacific and CALA			
• Call Capacity Report			
Call Center Transfer Connect	393	UUI	3.0
• Call Center Transfer Connect			
Call Detail Recording Enhancement	259	CDRX	20
• Call Detail Recording Enhancement			
Call Detail Recording Expansion (7 digit)	151	CDRE	13
• Call Detail Recording Expansion			
Call Detail Recording on Teletype Terminal	5	CTY	1
• CDR on TTY			

Copyright © 1994–2007, Nortel Networks
Nortel Networks Confidential

Package Name	Number	Mnemonic	Release
Call Detail Recording Queue Record	83	CDRQ	3
• ACD CDR Queue Record			
Call Detail Recording, Data Link	6	CLNK	1
Call Detail Recording	4	CDR	1
• Call Detail Recording			
• Call Detail Recording Enhancement			
• Call Detail Recording on Redirected Incoming Calls			
• Call Detail Recording with Optional Digit Suppression			
• Call Detail Recording 100 Hour Call			
• NPI and TON in CDR Tickets			
• Call Forward and Busy Status			
• Call Forward Busy			
• Call Forward by Call Type			
• Call Forward External Deny			
• Call Forward No Answer, Second Level			
• Call Forward No Answer/Flexible Call Forward No Answer			
• Call Forward Save on SYSLOAD			
• Call Forward Save on SYSLOAD			
• Call Forward to Trunk Restriction			
• Call Forward, Break-In & Hunt Internal/External Network Wide			
• Call Forward, Internal Calls			
Call ID (for AML applications)	247	CALL ID	19
• Call Identification			
Call Page Networkwide	307	PAGENET	22
• Call Page Network Wide			

Copyright © 1994–2007, Nortel Networks
Nortel Networks Confidential

Package Name	Number	Mnemonic	Release
Call Park Networkwide	306	CPRKNET	22
• Call Park Network Wide			
Call Park	33	CPRK	2
• Call Park			
• Recall after Parking			
• Call Pickup			
Call Processor Input/Output (Option 81)	298	CPIO	21
• Call Processor Input/Output)			
• Call Redirection by Time of Day			
• Call Transfer			
Call Waiting Notification (Meridian 911)	225	CWNT	19
• Call Waiting Notification (Meridian 911)			
• Call Waiting/Internal Call Waiting			
Call-by-Call Service	117	CBC	13
• Call-by-Call Service			
Called Party Control on Internal Calls	310	CPCI	22
• China Phase III - Called Party Control on Internal Calls			
• Called Party Disconnect Control			
Calling line Identification in Call Detail Recording	118	CCDR	13
• Calling Line Identification in Call Detail Recording			

Copyright © 1994–2007, Nortel Networks
Nortel Networks Confidential

Package Name	Number	Mnemonic	Release
Calling Party Name Display	95	CPND	10
• Call Party Name Display • DNIS Name Display (see also packages 98, and 113) • Calling Party Name Display Denied			
Calling Party Privacy	301	CPP	21
• Calling Party Privacy • Camp-On • Camp-On • Camp-on to Multiple Appearance Directory Number • Capacity Expansion • Card LED Status			
Centralized Attendant Services (Main)	26	CASM	1
• Centralized Attendant Services - Main			
Centralized Attendant Services (Remote)	27	CASR	1
• Centralized Attendant Services – Remote • Centralized Multiple Line Emulation			
Charge Account for CDR	23	CHG	1
• Charge Account and Calling Party Number			
Charge Account/Authorization Code	24	CAB	1
• Charge Account/Authorization Code Base • Charge Display at End of Call (see also package 101)			

Copyright © 1994–2007, Nortel Networks
Nortel Networks Confidential

Package Name	Number	Mnemonic	Release
China Attendant Monitor Package	285	CHINA	21
• China – Attendant Monitor • China Number 1 Signaling – Toll Operator Break-In (see also Package 127) • China Number 1 Signaling Enhancements • China Number 1 Signaling Trunk Enhancements (see also packages 49, 113, and 128)			
China Toll Package	292	CHTL	21
• China Phase II – Toll Call Loss Plan			
CLASS Calling Name Delivery	333	CNAME	23
• CLASS			
CLASS Calling Number Delivery	332	CNUMB	23
• CLASS			
Collect Call Blocking	290	CCB	21
• Collect Call Blocking			
Command Status Link	77	CSL	8
• Command Status Link			
Commonwealth of Independent States Multifrequency Shuttle Signaling	326	CISMFS	23
• CIS Multifrequency Shuttle Signaling			
Commonwealth of Independent States Trunks	221	CIST	21
• Commonwealth of Independent States Digital Trunk Interface • Three-Wire Analog Trunk – CIS			

Copyright © 1994–2007, Nortel Networks
Nortel Networks Confidential

Package Name	Number	Mnemonic	Release
• Commonwealth of Independent States Automatic Number Identification (ANI) Digits Manipulation and Gateways Enhancements			24
• Commonwealth of Independent States Automatic Number Identification (ANI) Reception			24
• Commonwealth of Independent States Toll Dial Tone Detection			24
• Conference			
• Conference Warning Tone Enhancement for Italy			
Console Operations	169	COOP	14
• Console Operations			
Console Presentation Group	172	CPGS	15
• Console Presentation Group Level Services			
Controlled Class Of Service	81	CCOS	7
• Controlled Class of Service			
Coordinated Dialing Plan	59	CDP	1
• Coordinated Dialing Plan			
Core Network Module	299	CORENET	21
• Core Network Module			
• CP3			
Corporate Directory	381	CDIR	25
• Corporate Directory			
CSL with Alpha Signalling	85	CSLA	8

Copyright © 1994–2007, Nortel Networks
Nortel Networks Confidential

Package Name	Number	Mnemonic	Release
Customer Controlled Routing	215	CCR	17
• Customer Controlled Routing • MFC Interworking with AML Based Applications (see also packages 128, and 214) • Dataport Hunting			
CP Pentium® Backplane for Intel® Machine	368	CPP_CNI	25
Deluxe Hold	71	DHLD	4
• Call Hold, Deluxe • Call Hold, Individual Hold Enhancement			
Departmental Listed Directory Number	76	DLDN	5
Dial Intercom	21	DI	1
• Dial Intercom • Distinctive Ringing for Dial Intercom • Dial Pulse/Dual-tone Multifrequency Conversion			
Dial Tone Detector	138	DTD	10
• Dial Tone Detection • Flexible Dial Tone Detection			
Dialed Number Identification System	98	DNIS	10
• Dialed Number Identification Services • Dialed Number Identification Services Length Flexibility • Dialed Number Identification Services Name Display (see also packages 95, and 131) • 7 Digit DNIS for MAX • N Digit DNIS			

Copyright © 1994–2007, Nortel Networks
Nortel Networks Confidential

Package Name	Number	Mnemonic	Release
Digit Display	19	DDSP	1
• Digit Display			
Digit Key Signaling	180	DKS	1
Digital Access Signaling System 2	124	DASS2	16
• Analog Private Network Signaling System (APNSS) (see also packages 190, 122, and 123)			
• DASS2/DPNSS1 – Integrated Digital Access (see also packages 122, and 123)			
Digital Private Network Signaling Network Services (DPNSS1)	231	DNWK	16
• Attendant Call Offer			
• Attendant Timed Reminder Recall and Attendant Third Party Service			
• Call Back when Free and Next Used			
• D-channel Handler Interface Expansion			
• Extension Three-Party Service			
• Loop Avoidance			
• Redirection			
• Route Optimization			
• Step Back on Congestion			
• Diversion			
• Night Service			
• Route Optimisation/MCDN Trunk Anti-Tromboning Interworking			
Digital Private Network Signaling System 1 Message Waiting Indication	325	DMWI	23
• DPNSS1 Message Waiting Indication			

Copyright © 1994–2007, Nortel Networks
Nortel Networks Confidential

Package Name	Number	Mnemonic	Release
Digital Private Network Signaling System 1	123	DPNSS	16
• Analog Private Network Signaling System (APNSS) (see also packages 190, 122, and 124)			
• DASS2/DPNSS1 – Integrated Digital Access (see also packages 122, and 124)			
• Digital Trunk Interface Enhancements			
• Digitone Receiver Enhancements: – Digitone Receiver Time-out Enhancement			
• Digitone Receiver Enhancements: – Quad Density Digitone Receiver Card			
Direct Inward Dialing to TIE (Japan only)	176	DTOT	16
• Direct Inward Dialing to TIE			
• Direct Inward Dialing to TIE Connection			
Direct Inward System Access	22	DISA	1
• Call Park on Unsupervised Trunks			
• Direct Inward System Access			
• Direct Inward System Access on Unsupervised Trunks			
Direct Private Network Access	250	DPNA	21
• Direct Private Network Access			
Directed Call Pickup	115	DCP	12
• Call Pickup, Directed			
• Directory Number Delayed Ringing			

Copyright © 1994–2007, Nortel Networks
Nortel Networks Confidential

Package Name	Number	Mnemonic	Release
Directory Number Expansion (7 Digit)	150	DNXP	13
• Directory Number Expansion • Directory Number — Flexible Attendant Directory Number — Listed Directory Numbers — Single Appearance Directory Number — Multiple Appearance Directory Number — Prime Directory Number • Diskette Overflow Warning • Display of Calling Party Denied			
Distinctive Ringing	74	DRNG	4/9
• Distinctive/New Distinctive Ringing			
Do Not Disturb, Group	16	DNDG	1
• Do Not Disturb Group			
Do Not Disturb, Individual	9	DNDI	1
• Do Not Disturb • Network Individual Do Not Disturb (see also packages 127, and 159) • Electronic Brandlining			
Emergency Services Access Calling Number Mapping	331	ESA_CLMP	23
• Emergency Services Access (See also packages 329 and 330)			
Emergency Services Access Supplementary	330	ESA_SUPP	23
• Emergency Services Access (See also packages 329 and 331)			

Copyright © 1994–2007, Nortel Networks
Nortel Networks Confidential

Package Name	Number	Mnemonic	Release
Emergency Services Access	329	ESA	23
• Emergency Services Access (See also packages 330 and 331) • End of Selection • End of Selection Busy • End-of-Dialing on Direct Inward/Outward Dialing Incoming Call Indicator Enhancement			
End-To-End Signaling	10	EES	1
• Attendant End-to-End Signaling • End-to-End Signaling			
Enhanced ACD Routing	214	EAR	17
• Enhanced Automatic Call Distribution Routing • MFC Interworking with AML Based Applications (see also packages 128, and 215)			
Enhanced Call Trace	215	ECT	18
• Customer Controlled Routing • MFC Interworking with AML Based Applications (see also packages 128, and 214)			
Enhanced Controlled Class of Service	173	ECCS	15
Enhanced DPNSS Services	288	DPNSS_ES	21
• DPNSS1 Executive Intrusion			
Enhanced DPNSS1 Gateway	284	DPNSS189I	20
• Enhanced DPNSS1 Gateway			

Copyright © 1994–2007, Nortel Networks
Nortel Networks Confidential

Package Name	Number	Mnemonic	Release
Enhanced Hot Line	70	HOT	4/10
• Hot Line • Network Intercom • Enhanced input/output buffering • Enhanced Maintenance (Patching)			
Enhanced Music	119	EMUS	12
• Music, Enhanced			
Enhanced Night Service	133	ENS	20
• Enhanced Night Service • Enhanced package printout • Equal Access Compliance			
Euro ISDN Trunk - Network Side	309	MASTER	22
• EuroISDN Trunk - Network Side			
Euro ISDN	261	EURO	20
• ISDN – Advice of Charge for EuroISDN • ISDN BRI and PRI Trunk Access for Europe (EuroISDN) • EUROISDN Continuation			
Euro Supplementary Service	323	ETSI_SS	22
• EuroISDN Call Completion Supplementary Service			
Executive Distinctive Ringing	185	EDRG	16
• Executive Distinctive Ringing			
Fast Tone and Digit Switch	87	FTDS	7
• Fast Tone Digit Switch			

Copyright © 1994–2007, Nortel Networks
Nortel Networks Confidential

Package Name	Number	Mnemonic	Release
FCC Compliance for DID Answer Supervision	223	FCC68	17
• Federal Communications Commission Compliance for DID Answer Supervision			
Feature Group D	158	FGD	17
• Feature Group D (Inbound to Meridian 1)			
• Federal Communications Commission Compliance for Equal Access			
• First-Second Degree Busy Indication			
• First-Second Degree Busy Indication, ISDN			
• Flexible Attendant Call Waiting Thresholds			
• Flexible Busy Tone Timer			
Fiber Network	365	FIBN	25
Flexible Call Back Queuing	61	FCBQ	1
• Flexible Call Back Queuing			
Flexible Direct Inward Dialing	362	FDID	24
• Flexible Direct Inward Dialing			
Flexible Feature Codes	139	FFC	15
• Call Forward/Hunt Override Via Flexible Feature Code			
• China Number 1 Signaling – Flexible Feature Codes			
• Dial Access to Group Calls (see also package 48).			
• Direct Inward Dialing Call Forward No Answer Timer			
• Electronic Lock Network Wide/Electronic Lock on Private Lines			
• Flexible Feature Codes			
• Automatic Wake FFC Delimiter			
• Call Forward Destination Deactivation			

Copyright © 1994–2007, Nortel Networks
Nortel Networks Confidential

Package Name	Number	Mnemonic	Release
Flexible Numbering Plan	160	FNP	14
• Alternative Routing for DID/DOD • Flexible Numbering Plan • Special Dial Tones after Dialed Numbers • Flexible Numbering Plan Enhancement • Flexible Orbiting Prevention Timer			
Flexible Tones and Cadences	125	FTC	16
• Flexible Tone and Digit Switch Control • Reverse Dial on Routes and Telephones • Tones and Cadences			
Forced Charge Account	52	FCA	1
• Charge Account, Forced			
French Type Approval	197	FRTA	15
• Camp-on to a Set in Ringback or Dialing • Forward No Answer Call Waiting Direct Inward Dialing • Group Hunt Queuing (see also package 120) • Group Hunt Queuing Limitation Enhancement (see also package 120) • Loopback on Central Office Trunks			
Geographic Redundancy Primary system	404	GRPRIM	4.0
Geographic Redundancy Secondary system	405	GRSEC	4.0
Group Call	48	GRP	1
• Dial Access to Group Calls (see also package 139). • Group Call • Group Hunt Queuing Limitation (see also package 120)			

Copyright © 1994–2007, Nortel Networks
Nortel Networks Confidential

Package Name	Number	Mnemonic	Release
Group Hunt/DN Access to SCL	120	PLDN	15
• Group Hunt Queuing (see also package 197)			
• Group Hunt Queuing Limitation (see also package 131)			
• Group Hunt Queuing Limitation Enhancement (see also package 197)			
• Group Hunt			
• Speed Call Directory Number Access			
• Handset Volume Reset			
• Handsfree Download (Meridian Digital Telephones			
• Held Call Clearing			
H323 Virtual Trunk	399	H323_VTRK	3.0
• IP Peer Networking Phase 2			
• Branch Office			
HiMail Fax Server	195	FAXS	18
History File	55	HIST	1
• History File			
Hold in Queue for IVR	218	IVR	18
Hospitality Management	166	HOSP	16
Hospitality Screen Enhancement	208	HSE	17
• Hospitality Enhancements: Display Enhancements			
• Hunting By Call Type			
• Hunting			
— Circular Hunting			
— Linear Hunting			
— Secretarial Hunting			
— Short Hunting			

Copyright © 1994–2007, Nortel Networks
Nortel Networks Confidential

Package Name	Number	Mnemonic	Release
— Data Port Hunting — Trunk Hunting • Incoming Call Indicator Enhancement			
Incoming DID Digit Conversion • China Number 1 Signaling Trunk Enhancements (see also packages 49, 128, and 131) • DNIS Name Display (see also packages 95, and 98) • Incoming DID Digit Conversion • Incoming Trunk Programmable Calling Line Identification • Incremental Software Management • Input/Output Access and System Limits	113	IDC	12
Integrated Digital Access • Analog Private Network Signaling System (APNSS) (see also packages 190, 123, and 124) • DASS2/DPNSS1 – Integrated Digital Access (see also packages 123 and 124) • DPNSS1 Satellite • DASS2/DPNSS INIT Call Cutoff	122	IDA	16
Integrated Message System UST and UMG are part of IMS Package. • Integrated Messaging System Link	35	IMS	2
Integrated Services Digital Network Application Module Link for Third Party Vendors • Application Module Link • Network Application Protocol Link Enhancement	153	IAP3P	13

Copyright © 1994–2007, Nortel Networks
Nortel Networks Confidential

Package Name	Number	Mnemonic	Release
Integrated Services Digital Network BRI Trunk Access	233	BRIT	18
• Integrated Services Digital Network Basic Rate Interface (see also packages 216, and 235)			
Integrated Services Digital Network Supplementary Features	161	ISDN INTLSUP	14
• Call Connection Restriction (see also packages 146 and 147)			
• Direct Inward Dialing to Network Calling			
• Incoming Digit Conversion Enhancement			
• Network Time Synchronization			
• X08 to X11 Gateway			
Integrated Services Digital Network Signaling Link	147	ISL	13
• Call Connection Restriction (see also packages 146 and 161)			
Integrated Services Digital Network	145	ISDN	13
• Backup D-Channel to DMS-100/250 and AT&T 4ESS			
• Call Pickup Network Wide			
• D-Channel Error Reporting and Monitoring			
• Integrated Services Digital Network (ISDN) Primary Rate Interface			
• Network Name Display (Meridian 1 to DMS-100/250)			
• Total Redirection Count			
• T309 Time			
• Integrated Voice and Data			

Copyright © 1994–2007, Nortel Networks
Nortel Networks Confidential

Package Name	Number	Mnemonic	Release
Intercept Computer Interface	143	ICP	10
• Intercept Computer Dial from Directory • Intercept Computer Enhancements • Intercept Computer Flexible DN Length • Intercept Computer Interface • Intercept Computer Meridian Mail Interactions • Intercept Computer Network Screen Activation, Flexible DN, Meridian Mail Interactions • Intercept Treatment Enhancements			
Intercept Treatment	11	INTR	1
• Intercept Treatment			
Inter-Exchange Carrier	149	IEC	13
• Inter Exchange Carrier			
Internal CDR	108	ICDR	10
• Internal Call Detail Recording			
International 1.5/2.0 Mb/s Gateway	167	GPRI	18
• Radio Paging • International Meridian 1			
International nB+D	255	INBD	20
• ISDN PRI D70 Trunk Access for Japan (nB+D)			

Copyright © 1994–2007, Nortel Networks
Nortel Networks Confidential

Package Name	Number	Mnemonic	Release
International Primary Rate Access (CO)	146	PRA	13
• Call Connection Restriction (see also packages 147 and 161) • Integrated Services Digital Network Primary Rate Access • Integrated Services Digital Network Primary Rate Access Central Office Connectivity to Japan D70			
International Primary Rate Access	202	IPRA	15
• Integrated Services Access/Call by Call Service Selection Enhancements • Integrated Services Digital Network Primary Rate Access to 1TR6 Connectivity • Integrated Services Digital Network Primary Rate Access to NUMERIS Connectivity • Integrated Services Digital Network Primary Rate Access to SwissNet 2 Connectivity • Integrated Services Digital Network Primary Rate Access to SYS-12 Connectivity			
International Supplementary Features	131	SUPP	9
• IODU/C			
IP Expansion	295	IPEX	25.40
• IP Expansion			
IP Media Gateway	403	IPMG	4.0
ISDN Semi-Permanent Connection	313	ISPC	22
• ISDN Semi-Permanent Connections for Australia • Italian Central Office Special Services (see also packages 129, and 157)			

Copyright © 1994–2007, Nortel Networks
Nortel Networks Confidential

Package Name	Number	Mnemonic	Release
Japan Central Office Trunks	97	JPN	9
• Japan Central Office Trunk			
Japan Digital Multiplex Interface	136	JDMI	14
• Japan Digital Multiplex Interface			
Japan Telecommunication Technology Committee	335	JTTC	23
• Japan TTC Common Channel Signaling			
Japan Tone and Digit Switch	171	JTDS	14
• Japan Tone and Digit Switch			
Last Number Redial	90	LNR	8
• Last Number Redial			
Latin American Spanish	279	MLMS_SPL	20
• Latin American Spanish			
Limited Access to Overlays	164	LAPW	16
• B34 Dynamic Loss Switching (see also packages 131 and 203) • Faster I/O • Limited Access to Overlays • Limited Access to Overlays Password Enhancement • Teletype Terminal Access Control in Multi-Customer Environment (see also package 131)			
Line Load Control	105	LLC	10
• Line Load Control • Line Lockout			

Copyright © 1994–2007, Nortel Networks
Nortel Networks Confidential

Package Name	Number	Mnemonic	Release
Local Steering Code Modifications	137	LSCM	10
• Local Steering Code Modifications • Lockout, DID Second Degree Busy and MFE Signaling Treatments • LOGIVOX Telephone • Loop Start Answer Supervision XUT • Loop Start Supervisory Trunks • Loop Start Supervisory Trunks (Incoming Calls)			
Location Code Expansion	400	LOCX	4.0
M2000 Digital Sets	88	DSET	7
• Distinctive Ringing for Digital Telephones • M2317 Telephones • Flexible Voice/Data Terminal Number			
M2250 Attendant Console	140	DCON	15
• Digital Attendant Console			
M2317 Digital Sets	91	DLT2	9
• M2317 Digital Sets			
M3000 Digital Sets	89	TSET	7
• M3000 Telephones			
M3900 Full Icon Support	397	ICON_ P0ACKAGE	3.0
• M3900 Full Icon Support			
M3900 Phase III Virtual Office Enhancement	387	VIR_OFF_ ENH	25.40
• Virtual Office Enhancement			
M3900 Ring Again	396	M3900_RGA_ PROG	3.0

Copyright © 1994–2007, Nortel Networks
Nortel Networks Confidential

Package Name	Number	Mnemonic	Release
M911 Enhancement Display	249	M911 ENH	25
• 10/20 Digit ANI on 911 Calls			
Maid Identification	210	MAID	17
• Maid Identification			
• Make Set Busy and Voice Call Override			
Make Set Busy	17	MSB	1
• Make Set Busy			
• Make Set Busy Improvement			
• Malicious Call Trace on Direct Inward Dialing			
Malicious Call Trace	107	MCT	10
• Enhanced Malicious Call Trace			
• Malicious Call Trace			
• Malicious Call Trace DN/TN Print			
• Malicious Call Trace Idle			
• Manual Line Service			
• Manual Service Recall to Attendant			
• Manual Signaling (Buzz)			
• Manual Trunk Service			
MAT 5.0	296	MAT	22
• Meridian 1 Attendant Console Enhancements (see also package 76)			
Meridian 1 Companion Option	240	MCMO	19
• Nortel Networks Integrated DECT			
MCDN End to End Transparency	348	MEET	24

Copyright © 1994–2007, Nortel Networks
Nortel Networks Confidential

Package Name	Number	Mnemonic	Release
Meridian 1 Enhanced Conference, TDS and MFS	204	XCT0	15
• Meridian 1 Enhanced Conference, TDS and MFS			
Meridian 1 Fault Management	243	ALRM_FILTER	19
• Alarm Management			
• Meridian 1 Initialization Prevention and Recovery			
Meridian 1 Microcellular Option	303	MMO	22
Meridian 1 Mobility Multi-Site Networking	314	MMSN	22
Meridian 1 Packet Handler	248	MPH	19
• Meridian 1 Packet Handler			
Meridian 1 Superloop Administration (LD 97)	205	XCT1	15
• Extended DID/DOD Software Support – Europe			
• Extended Flexible Central Office Trunk Software Support			
• Extended Tone Detector and Global Parameters Download (see also package 203)			
• Generic XFCOT Software Support			
Meridian 1 XPE	203	XPE	15
• B34 Codec Static Loss Plan Downloading			
• B34 Dynamic Loss Switching (see also packages 131, and 164)			
• Extended Multifrequency Compelled Sender/Receiver			
• Extended Tone Detector and Global Parameters Download (see also package 205)			
• Intelligent Peripheral Equipment Software Support Enhancements			

Copyright © 1994–2007, Nortel Networks
Nortel Networks Confidential

Package Name	Number	Mnemonic	Release
Meridian 911	224	M911	19
• Meridian 911 Enhancements – Call Abandon			
• Meridian 911 Enhancements – MADN Display Coordination			
Meridian Hospitality Voice Service	179	HVS	16
• Meridian Hospitality Voice Services			
Meridian Link Modular Server	209	MLM	16
• Meridian Link Enhancements			
Meridian SL-1 ST Package	96	SLST	9
• Meridian SL-1 ST Package			
Message Intercept	163	MINT	15
• Message Intercept			
Message Waiting Center	46	MWC	1
• Message Waiting Lamp Maintenance			
• Message Waiting Unconditional			
• Meridian Mail Trunk Access Restriction			
Message Waiting Indication Interworking with DMS	219	MWI	19
• Message Waiting Indication (MWI) Interworking			
Mini CDR	31	MCDR	1
Mobility Server	302	MOSR	22
• Modular Telephone Relocation			

Copyright © 1994–2007, Nortel Networks
Nortel Networks Confidential

Package Name	Number	Mnemonic	Release
Multifrequency Compelled Signaling	128	MFC	9
• China Number 1 Signaling Trunk Enhancements (see also packages 49, 113, and 131)			
• China Number 1 Signaling – Active Feature Dial Tone (see also package 126)			
• China Number 1 Signaling – Audible Alarm (see also package 126)			
• China Number 1 Signaling – Vacant Number Announcement (see also package 126)			
• India Phase 2			
• R2 Multifrequency Compelled Signaling (MFC) DID/DTMF DOD			
• R2 Multifrequency Compelled Signaling (MFC) Selective Route To Attendant			
• MFC Interworking with AML Based Applications (see also packages 214 and 215)			
• R2Multifrequency Compelled Signaling Timer Control			
• Semi-Compelled MFC and Calling Name Identification Charges			
Multifrequency Signaling for Socotel	135	MFE	10
• Multifrequency Signaling for Socotel			
Multi-Language I/O Package	211	MLIO	16
• Multi-language TTY Input/Output			
Multi-Language Wake Up	206	MLWU	16
• Multi-language Wake Up			
• Multi-Party Operation Enhancements			

Copyright © 1994–2007, Nortel Networks
Nortel Networks Confidential

Package Name	Number	Mnemonic	Release
Multi-Party Operations	141	MPO	20
• Attendant Clearing during Night Service • Multi-Party Operations • Multiple Appearance DN Redirection Prime • Multiple Console Operation			
Multiple Queue Assignment	297	MQA	21
• Multiple Queue Assignment			
Multiple-Customer Operation	2	CUST	1
• Multiple Customer Operation			
Multiple-Tenant Service	86	TENS	7
• Multi-Tenant Service			
Multi-purpose Serial Data Link Serial Data Interface	227	MSDL SDI	19
• Multi-purpose Serial Data Link Serial Data Interface			
Multi-purpose Serial Data Link Single Terminal Access	228	MSDL STA	19
• Single Terminal Access			
Multi-purpose Serial Data Link	222	MSDL	18
• Multi-purpose Serial Data Link			
Multi-Site Mobility Networking	370	MSMN	25
Multi-User Login	242	MULTI_USER	19
• Multi-User Login			
Music Broadcast	328	MUSBRD	23
• Music Broadcast			

Copyright © 1994–2007, Nortel Networks
Nortel Networks Confidential

Package Name	Number	Mnemonic	Release
Music	44	MUS	1
• Music			
N/W Communications Management Center	30	CMAC	1
Network Alternate Route Selection	58	NARS	1
• Equi-distribution Network Attendant Service Routing (see also package 159) • Network Alternate Route Selection/Basic Alternate Route Selection Enhancement – Local Termination (see also package 57) • Network Anti-tromboning • Virtual Network Services/Virtual Directory Number Expansion (see also package 183)			
Network Attendant Service	159	NAS	20
• Equi-distribution Network Attendant Service Routing (see also package 58) • Network Individual Do Not Disturb (See also packages 9 and 127).			
Network Authorization Code	63	NAUT	1
• Network Authorization Code			
Network Automatic Call Distribution	207	NACD	15
• Network Automatic Call Distribution			
Network Call Back Queuing	38	MCBQ	2
• Network Call Back Queuing			
Network Call Transfer	67	NXFR	3
Network Class Of Service	32	NCOS	1
• Network Class of Service			
Network Message Services	175	NMS	16

Copyright © 1994–2007, Nortel Networks
Nortel Networks Confidential

Package Name	Number	Mnemonic	Release
Network Priority Queuing	60	PQUE	1
• Network Priority Queuing			
Network Signaling	37	NSIG	2
• Network Signaling			
Network Speed Call	39	NSC	2
• Network Speed Call			
Network Traffic Measurements	29	NTRF	1
• Network Traffic Measurement			
New Flexible Code Restriction	49	NFCR	2
• China Number 1 Signaling Trunk Enhancements (see also packages 113, 128, and 131)			
• New Flexible Code Restriction			
New Format CDR	234	FCDR	18
• Call Detail Recording Time to Answer			
• CDR on Busy Tone			
Next Generation Connectivity	324	NGEN	22
NI-2 Call By Call Service Selection	334	NI-2 CBC	23
• Night Restriction Classes of Service			
• Night Service			
• Night Service Enhancements – All Calls Remain Queued for Night Service			
• Night Service Enhancements – Recall to Night DN			
• Night Service Enhancements – Requeuing of Attendant Present Calls			
• Night Service Enhancements – Requeuing of Attendant Present Calls			

Copyright © 1994–2007, Nortel Networks
Nortel Networks Confidential

Package Name	Number	Mnemonic	Release
NI-2 Name Display Service	385	NDS	25.40
• NI-2 Name Display Supplementary Service			
Nortel Symposium Call Center	311	NGCC	22
North America National ISDN Class II Equipment	291	NI2	21
• North American Numbering Plan			
• Off-Hook Alarm Security			
Observe Agent Security	394	OAS	3.0
• Observe Agent Security			
Off-Hook Queuing	62	OHQ	1
• Network Drop Back Busy and Off-hook Queuing (see also package 192)			
Office Data Administration System	20	ODAS	1
• Office Data Administration System			
• Off-Premise Extension			
On Hold On Loudspeaker	196	OHOL	20
• On-Hook Dialing			
Open Alarms	315	OPEN ALARM	22
Operator Call Back (China #1)	126	OPCB	14
• Busy Verify on Calling Party Control Calls			
• China Number 1 Signaling – Active Feature Dial Tone (see also package 128)			
• China Number 1 Signaling – Audible Alarm (see also package 128)			
• China Number 1 Signaling – Called Party Control			

Copyright © 1994–2007, Nortel Networks
Nortel Networks Confidential

Package Name	Number	Mnemonic	Release
• China Number 1 Signaling – Calling Number Identification on Outgoing Multifrequency Compelled Signaling			
• China Number 1 Signaling – Calling Party Control			
• China Number 1 Signaling – Flexible Timers			
• China Number 1 Signaling – KE Multifrequency Compelled Tandem Signaling			
• China Number 1 Signaling – Malicious Call Trace Enhancement			
• China Number 1 Signaling – Off-hook Tone			
• China Number 1 Signaling – Toll Call Identification			
• China Number 1 Signaling – Toll Operator Call Back			
• China Number 1 Signaling – Toll Operator Call Back Enhancement			
• China Number 1 Signaling – Vacant Number Announcement (see also Package 128)			
Optional Features	1	OPTF	1
• Autodial			
• Call Forward All Calls			
• Ring Again			
• Speed Call			
• Speed Call on Private Lines (see also package 0)			
• Speed Call/Autodial with Authorization Codes (see also package 34)			
• Speed Call Delimiter (see also package 34)			
Optional Outpulsing Delay	79	OOD	5
• Optional Outpulsing Delay			

Copyright © 1994–2007, Nortel Networks
Nortel Networks Confidential

Package Name	Number	Mnemonic	Release
Originator Routing Control	192	ORC_RVQ	18
• Network Drop Back Busy and Off-hook Queuing (see also package 62) • Remote Virtual Queuing • Out-of-Service Unit			
Outpulsing, asterisk (*) and octothorpe (#)	104	OPAO	
• Outpulsing of Asterisk "*" and Octothorpe "#"			
Overlap Signaling (M1 to M1 and M1 to 1TR6 CO)	184	OVLP	15
• Overlap Signaling • Overlay 45 Limited Repeats • Overlay Cache Memory • Override • Paging • Partial Dial Timing • PBX (500/2500) Telephones • Periodic Camp-on Tone • Periodic Clearing • Periodic Clearing Enhancement • Periodic Clearing on RAN, Meridian Mail, ACD, and Music			
Personal Call Assistant	398	PCA	3.0
• Personal Call Assistant			
Phantom TN	254	PHTN	20
• Phantom TNs • Position Busy with Call on Hold			

Copyright © 1994–2007, Nortel Networks
Nortel Networks Confidential

Package Name	Number	Mnemonic	Release
PPM/Message Registration	101	MR	10
• Advice of Charge Real-time Supplementary Services for NUMERIS and SWISSNET (see also package 131)			
• Advice of Charge – Charging Information and End of Call for NUMERIS Connectivity (see also package 131)			
• Message Registration			
• Periodic Pulse Metering			
• Predictive Dialing			
Pretranslation	92	PXLT	8
• Pretranslation			
• Preventing Reciprocal Call Forward			
Priority Network Override	389	PONW	25.40
• Network Breakin and Force Disconnect			
Priority Override/Forced Camp-On	186	POVR	20
• Forced Camp-on and Priority Override			
• Privacy			
• Privacy Override			
• Privacy Release			
• Private Line Service			
Proactive Voice Quality Management	401	PVQM	4.0
Property Management System Interface	103	PMSI	10
• Property Management System Interface			
• Public Switched Data Service			
Pulsed E&M (Indonesia, French Colise)	232	PEMD	18
• Pulsed E&M DTI2 Signaling			

Copyright © 1994–2007, Nortel Networks
Nortel Networks Confidential

Package Name	Number	Mnemonic	Release
Q Reference Signaling Point Interface	263	QSIG	20
• Integrated Services Digital Network QSIG Basic Call			
QSIG Generic Functional protocol	305	QSIG GF	22
• ISDN QSIG Generic Functional Transport			
QSIG Supplementary Service	316	QSIG-SS	22
• ISDN QSIG Call Completion			
• ISDN QSIG Call Diversion Notification			
• ISDN QSIG Path Replacement			
Radio Paging	187	RPA	15
• Radio Paging			
• Radio Paging Product Improvements			
• Recall to Same Attendant			
• Recall with Priority during Night Service			
• Recall With Priority during Night Service			
• Recall With Priority during Night Service Network Wide			
Recorded Announcement Broadcast	327	RANBRD	23
• Recorded Announcement Broadcast			
Recorded Announcement	7	RAN	1
• Recorded Announcement			

Copyright © 1994–2007, Nortel Networks
Nortel Networks Confidential

Package Name	Number	Mnemonic	Release
Recorded Overflow Announcement	36	ROA	2
• Recorded Overflow Announcement • Recorded Telephone Dictation • Recovery of Misoperation on the Attendant Console • Recovery on Misoperation of Attendant Console • Reference Clock Switching • Reference Clock Switching (see also packages 75, 129, and 154)			
Remote IPE	286	REMOTE_IPE	
• Remote Intelligent Peripheral Equipment			
Remote Virtual Queuing	192	RVQ	18
• Network Drop Back Busy and Off-hook Queuing (see also package 62) • Remote Virtual Queuing			
Resident Debug	82	RSDB	9
• Restricted Call Transfer • Ring and Hold Lamp Status • Ringback Tone from Meridian 1 Enhancement			
Ringing Change Key	193	RCK	15
• Ringing Change Key			
Room Status	100	RMS	10
• Room Status			

Copyright © 1994–2007, Nortel Networks
Nortel Networks Confidential

Package Name	Number	Mnemonic	Release
Scheduled Access Restrictions	162	SAR	20
• Scheduled Access Restrictions • Secrecy Enhancement • Secretarial Filtering • Seizure Acknowledgment • Selectable Conferee Display and Disconnect • Selectable Directory Number Size			
Semi-Automatic Camp-On	181	SACP	15
• Attendant Blocking of Directory Number • Attendant Idle Extension Notification • Semi-Automatic Camp-On • Serial Port Expansion			
Series Call	191	SECL	15
• Series Call			
Set Relocation	53	SR	1
• Automatic Set Relocation • Short Buzz for Digital Telephones • Short Memory Test • Single Digit Access to Hotel Services			
Set-to-Set Messaging	380	STS	25
• Set-to-Set Messaging			

Copyright © 1994–2007, Nortel Networks
Nortel Networks Confidential

Package Name	Number	Mnemonic	Release
Single Term Access	228	STA	19
• Single Term Access • Slow Answer Recall Enhancement • Slow Answer Recall for Transferred External Trunks • Source Included when Attendant Dials			
SIP Gateway and Converged Desktop	406	SIP	4.0
Soft Switch	402	SOFTSWITCH	4.0
Spanish KD3 DID/DOD interface	252	KD3	20
• KD3 Direct Inward Dialing/Direct Outward Dialing for Spain • Special Signaling Protocols • Special Trunk Support • Speed Call Directory Number Access • Speed Call on Private Lines (see also package 1) • Speed-Up Data Dump			
Standalone Meridian Mail	262	SAMM	20
• Meridian Mail, Standalone			
Station Activity Records	251	SCDR	20
• Station Activity Records			
Station Camp-On	121	SCMP	20
• Station Camp-On			
Station Category Indication	80	SCI	7
• Station Category Indication			
Station Loop Preemption	106	SLP	10

Copyright © 1994–2007, Nortel Networks
Nortel Networks Confidential

Package Name	Number	Mnemonic	Release
Station Specific Authorization Codes	229	SSAU	19
• Station Specific Authorization Code • Station-to-Station Calling			
Stored Number Redial	64	SNR	3
• Stored Number Redial			
Supervisory Attendant Console	93	SUPV	8
• Supervisory Attendant Console			
Supervisory Console Tones	189	SVCT	20
• System Capacity Enhancements			
System Errors and Events Lookup	245	SYS_MSG_ LKUP	19
• System Message Lookup			
System Speed Call	34	SSC	2
• Speed Call/Autodial with Authorization Codes (see also package 1) • Speed Call, System • Speed Call Delimiter (see also package 34) • Telephones (PBX) • Teletype Terminal Access Control in Multi-Customer Environment (see also package 164) • Telset Call Timer Enhancement			
Time and Date	8	TAD	1
• Time and Date			
Tone Detector Special Common Carrier	66	SCC	7

Copyright © 1994–2007, Nortel Networks
Nortel Networks Confidential

Package Name	Number	Mnemonic	Release
Tone Detector	65	TDET	7
• Tone Detector • Tone to Last Party • Tones, Flexible Incoming			
Traffic Monitoring	168	TMON	
Trunk Anti-Tromboning	293	TAT	21
• Trunk Anti-Tromboning			
Trunk Barring	132	TBAR	20
• Trunk Barring			
Trunk Failure Monitor	182	TFM	15
• Trunk Failure Monitor • Trunk Failure Monitor Enhancement			
Trunk Hook Flash (Centrex)	157	THF	14
• Centrex Switchhook Flash • Italian Central Office Special Services (see also packages 129, and 131) • Trunk to Trunk Connections • Trunk Traffic Reporting Enhancement			
Trunk Verification from Station	110	TVS	9.32
• Trunk Verification from a Station • Uninterrupted Line Connection			
United Kingdom	190	UK	16
• Analog Private Network Signaling System (APNSS) (see also packages 122 123, and 124) • UK Analogue Hardware Support			

Copyright © 1994–2007, Nortel Networks
Nortel Networks Confidential

Package Name	Number	Mnemonic	Release
Universal ISDN Gateways	283	UIGW	20
• Universal ISDN Gateway • Variable Flash Timing and Ground Button • Variable Guard Timing			
VIP Auto Wake Up	212	VAWU	17
• Hospitality Enhancements: V.I.P. Auto Wake Up			
Virtual Network Services	183	VNS	16
• Virtual Network Services • Virtual Network Services/Virtual Directory Number Expansion (see also package 58) • Voice Call			
Virtual Office	382	VIRTUAL_ OFFICE	25
• Branch Office • Emergency Services For Virtual Office • Internet Telephone Virtual Office • Virtual Office			
Virtual Office Enhancement	387	VOE	3.0
• Branch Office • Emergency Services For Virtual Office • Internet Telephone Virtual Office			
Voice Mailbox Administration	246	VMBA	19
• Meridian Mail Voice Mailbox Administration			

Copyright © 1994–2007, Nortel Networks
Nortel Networks Confidential

Package Name	Number	Mnemonic	Release
X08 to X11 Gateway	188	L1MF	15
• X08 to X11 Gateway			
Zone Call Admission Control	407	ZCAC	4.5
• Adaptive Network Bandwidth Management			

Copyright © 1994–2007, Nortel Networks
Nortel Networks Confidential

Copyright © 1994–2007, Nortel Networks
Nortel Networks Confidential

N Digit DNIS

Contents

This section contains information on the following topics:

"Feature description" (page 89)

"Operating parameters" (page 89)

"Feature interactions" (page 90)

"Feature packaging" (page 92)

"Feature implementation" (page 92)

" Feature operation" (page 97)

Feature description

Dialed Number Identification Services (DNIS) presents the Automatic Call Distribution (ACD) call to an agent's set or terminal. The incoming call displays the DNIS digits which represent product lines or services. The displayed DNIS digits reduces the time needed to service a call and the additional information helps the agent provide a greater degree of customer service. The ACD Routing by DNIS number routes the call to a specific ACD DN based on the DNIS number dialed.

With the N Digit DNIS feature, the DNIS length is 31 digits. Both ACD and Network ACD (NACD) support the N Digit DNIS feature.

Operating parameters

If the system initializes during an active call, DNIS information is lost.

M911 trunks cannot be configured as DNIS trunks.

System messages for the Time Slot Monitor (TSM) supports 31 digits of DNIS.

Copyright © 1994–2007, Nortel Networks
Nortel Networks Confidential

Applications and features display DNIS in the following ways:

- Meridian MAX 9.0 supports up to nine digits of DNIS information. Nine digits of DNIS information are sent over the High Speed Link (HSL). The first or last nine digits of DNIS information is sent depending on the configuration of the WDGT prompt in the RDB block.
- Auxiliary Processor Link (APL) supports four DNIS digits. If the DNIS information is longer than four digits, the first or last four digits are sent over the APL depending on the configuration of the WDGT prompt in the RDB block.
- Call Detail Recording (CDR) supports up to seven digits of DNIS digits. If more than seven digits of DNIS are received, the first or last seven digits are displayed on the CDR, depending on the configuration of the WDGT prompt in the RDB block.
- Call Party Name Display (CPND) supports name configuration up to seven digits of DNIS. If the DNIS information is more than seven digits, a name is not configured.
- Feature Group D supports seven digits of DNIS information.
- The agent's set is limited to 12 digits of DNIS display. If more than 12 digits of DNIS are received, the first 12 or the last 12 digits of DNIS are displayed, depending on the configuration of the WDGT prompt in the RDB.

Feature interactions

Automatic Call Distribution DNIS routing through IDC table

The Incoming Digit Conversion (IDC) table converts the DNIS digits to a valid DN. With the N Digit DNIS feature, the DNIS information is expanded to a range of one to31 digits. The maximum number of DNIS digits that are translated by the IDC tree to an internal DN is limited to 16, due to the DC feature.

Application Module Base

The system is connected to Application Module Base (AM Base) through Application Module Link (AML). DNIS information is in AML messages; therefore, the AM Base supports the expanded DNIS information.

Application Module Link (AML) messages

Call presentation and call modification receives DNIS through AML messages. Messages related to DNIS go through the AML to the Meridian Link Module to the Customer Controlled Routing (CCR).

Copyright © 1994–2007, Nortel Networks
Nortel Networks Confidential

Call Detail Recording

The Call Detail Recording supports up to seven DNIS digits. If the DNIS digits exceeds seven digits, the Call Detail Recorder (CDR) uses the first or last seven digits, depending on the configuration of the WDGT prompt in the RDB block.

Customer Controlled Routing

Customer controlled routing (CCR) uses the DNIS number to determine which call processing treatment is used for a DNIS trunk call.

Digit display for DNIS

The agent set is limited to a display of 12 DNIS digits. If the digits exceed the set's display capabilities, the first or last 12 DNIS digits are displayed depending on the configuration of the WDGT prompt in the RDB block.

Host Enhanced Routing

The Meridian Link's Host Enhanced Routing allows an incoming call to be routed before call termination. An Incoming Call (ICC) message sent to the Meridian Link Module contains calling party information, DNIS information, and Controlled Directory Number (CDN).

Meridian Link Interactions

Any ringing message sent to the Meridian Link over the AML contains expanded DNIS information. The Meridian Link sends this expanded information to the host application.

Meridian Mail

Meridian Mail receives DNIS digits over the Command Status Link (CSL). The DNIS message contains one to 31 DNIS digits, instead of the previously supported one to seven digits. Because Meridian Mail limits DNIS digits to 30, the AML message uses 30 digits.

Meridian MAX

The system communicates with Meridian MAX, ACD MAX, or ACD supports nine digits of DNIS.

Multi-Frequency Signaling for KD3 for Spain

If a DNIS route uses Multi-Frequency Compelled (MFC) signals, the DNIS route must use the same number of digits as the MFC.

Multi-Frequency Signaling for Socotel

Multi-Frequency signaling for Socotel (MFE) trunks use either four or five signals, which requires DNIS to use the same number.

Copyright © 1994–2007, Nortel Networks
Nortel Networks Confidential

Network Automatic Call Distribution

The Network Automatic Call Distribution (NACD) sends and receives DNIS calls to a remote node through an NACD-Call Setup message. The remote node receives and saves the expanded one to 31digits of a DNIS message.

Symposium Call Center Server

The interaction of N Digit DNIS with Symposium Call Center Server (SCCS) is the same as its interaction with Customer Controlled Routing (CCR) and AM Base. Any AML message sent to the AM Base contains expanded DNIS information. AM Base supports the expanded DNIS information. Symposium supports seven digits of N Digit DNIS information.

Feature packaging

This feature is packaged as part of the existing DNIS package 98.

Feature packages required for the N Digit DNIS are:

- Dialed Number Identification System (DNIS) package 98
- Automatic Call Distribution (ACD A) package 45
- Digit Display (DDSP) package 19
- Incoming DID Digit Conversion (IDC) package 113
- New Format Call Detail Recording (FCDR) package 234
- New Flexible Code Restriction (NFCR) package 49

Feature implementation

Task summary list

The following is a summary of the tasks in this section:

1. "LD 17" (page 93)

   Define SDI port for Auxiliary Processor Link.

2. " LD 49" (page 93)

   Define Incoming Digit Conversion (IDC) table.

3. "LD 16" (page 94)

   Define Incoming DID Digit Conversion DNIS route.

4. " LD 14" (page 95)

   Define a trunk that auto-terminates on ACD-DNIS.

5. " LD 16" (page 95)

   Define a route with DNIS feature enabled and AUTO-terminate.

6. " LD 15" (page 96)

Copyright © 1994–2007, Nortel Networks
Nortel Networks Confidential

Define APL Link number, enable the Incoming Digit Conversion (IDC) operation to include DNIS for a customer.

7. " LD 23" (page 97)

   Define ACD group.

There are two configurations possible:

1. Define SDI port for Auxiliary Processor Link in LD 17.
2. Define Incoming Digit Conversion table in LD 49.
3. Define IDC-DNIS route in LD 16.
4. Define a trunk that auto-terminates on ACD-DNIS in LD 14.

   OR

1. Define a route Auto Terminate Route in LD 16.
2. Define APL Link number, enable the Incoming Digit Conversion (IDC) operation to include DNIS for a customer in LD 15.
3. Define ACD group in LD 23.

LD 17

Prompt	Response	Description
REQ	CHG	Change existing data.
TYPE	CFN	Configuration Record.
ADAN	NEW TTY 0-15	Add an APL port.
CTYP	aaaa	Card type. aaaa = DCHI, SDI, SDI2, SDI4.
USER	APL	APL port connects to data link.

LD 49

Prompt	Response	Description
REQ	NEW CHG	Add new data. Change existing data.
TYPE	IDC	Type of data block (FCR or IDC).
CUST	xx	Customer number, as defined in LD 15
DCNO	0-254	Incoming Data Conversion (IDL) tree number.
...	...	...
...	...	...

Copyright © 1994–2007, Nortel Networks
Nortel Networks Confidential

Prompt	Response	Description
IDGT	0-99999999 0-99999999	Incoming digits to be converted to ACD DN.
	<CR>	Re-prompt request.

LD 16

Prompt	Response	Description
REQ	NEW CHG	Add new data. Change existing data.
TYPE	RDB	Route data block.
CUST	xx	Customer number, as defined in LD 15
ROUT		Route number
	0-511	Range for Large System and CS 1000E system.
	0-127	Range for Small System and Media Gateway 1000B.
...	...	...
AUTO	NO	Auto-terminate. YES = The route members terminate on DN defined by response to ATDN prompt in LD 14. NO = The route members terminate normally.
DNIS	YES	ACD DNIS route.
--NDGT	1-(4)-31	Number of DNIS digits required on the route. The extension 31 digits is available only for DID, TIE or IDA routes.
--WDGT	(L)F	First or last DNIS digits to be sent on APL and HSL link. Where: F = First, L = Last (default) WDGT has no effect on AML Links. All DNIS digits are sent for AML. Prompted if NDGT is greater than four. Also used for CDR when the New Format CDR (FCDR) package 234 is disabled. First or last 4 digits for APL. First or last 12 DNIS digits for digit display. First or last 9 DNIS digits for MAX. First or last 7 DNIS digits for CDR.
--IDC	YES (NO)	Incoming DED digit conversion on this route YES = Allow Incoming DID Digit Conversion on this route. (NO) = Deny Incoming DID Digit Conversion on this route.

Copyright © 1994–2007, Nortel Networks
Nortel Networks Confidential

Prompt	Response	Description
--DCNO	0-254	IDC translation table for this route in the day mode.
--NDNO	0-254	IDC Conversion Table for the night mode.

LD 14

Prompt	Response	Description
REQ	NEW	Add a trunk.
TYPE	DID	Direct Inward Dialing trunk type.
RTMB		Route number and Member Number
	0-511 1-4000	Range for Large System and CS 1000E system.
	0-127 1-4000	Range for Small System and Media Gateway 1000B.
ATDN	xxxx	xxxx = ACD-DN defined in LD 23.
CLS	DTN	Digitone signaling.

OR

LD 16

Prompt	Response	Description
REQ	NEW	Add a new data.
TYPE	RDB	Route Data Block.
CUST	xx	Customer number, as defined in LD 15
ROUT		Route number
	0-511	Range for Large System and CS 1000E system.
	0-127	Range for Small System and Media Gateway 1000B.
...	...	
AUTO	YES	Auto-terminate trunk. YES =YES = the route members terminate on DN defined by response to Auto Terminate Directory Number prompt in LD 14. (NO) =The route members terminate normally at the console.
DNIS	YES	ACD-DNIS route. YES = allow the ACD DNIS route. (NO) = Deny the ACD DNIS route. Prompted with Automatic Call Distribution Package D. (ACCDD) package 50, and the RTYP = TIE or Direct Inward Dialing (DID).

Copyright © 1994–2007, Nortel Networks
Nortel Networks Confidential

Prompt	Response	Description
NDGT	1-(4)-7 1-(4)-31	Number of DNIS digits required on the route. The extension to 31 digits is available only for DID, TIE or IDA routes.
WDGT	(L) F	First or last 4 DNIS digits to be sent on APL and HSL link. WDGT has no effect on AML links. All DNIS digits are sent for AML. Prompted if NDGTR is greater than 4. Also used for CDR when the New Format CDR (FCDR) package 234 is disabled. The number of (MFX), MFE or MFC digits takes precedence over the number of DNIS digits that are configured.

LD 15

Prompt	Response	Description
REQ:	CHG	Change existing data.
TYPE:	FCR	Disable/Enable New flexible code Restriction. Flexible Code Restriction.
CUST		Customer number
	0-99	Range for Large System and CS 1000E system.
	0-31	Range for Small System and Media Gateway 1000B.
NFCR	YES	New Flexible Code Restriction. (NO) = Default, disable New Flexible Code Restriction. YES = Enable New Flexible Code Restriction. To build an Incoming Digit Conversion (IDC) table in LD 49, NFCR and Incoming DID Digit Conversion (IDCA) must be set to YES. NFCR is prompted with New Flexible Code Restriction (NFCD) package 49.
-MAXT	1-255	Maximum number of New Flexible Code Restriction (NFCR) tables. Once defined a lower value cannot be entered for MAXT. The sum of the values for MAXT + DCMX < 255 per customer.

Copyright © 1994–2007, Nortel Networks
Nortel Networks Confidential

Prompt	Response	Description
IDCA	YES	Incoming DID Digit Conversion. (NO) = Default. Deny Incoming DID Digit Conversion. YES = Allow Incoming DID Digit Conversion. NFCR must = YES before IDCA can = YES. Prompted with Incoming Digit Conversion (IDL) package 113.
-DCMS	1-255	Digit conversion maximum number of tables (DCMS). The sum of the values for MAXT and DCMX cannot exceed 255 or MAXT + DCMX = 255.

LD 23

Prompt	Response	Description
REQ	NEW	Add ACD group.
TYPE	ACD	ACD data block.
CUST	xx	Customer number, as defined in LD 15
ACDN	xxxx	ACD Directory Number.

Feature operation

No specific operating procedures are required to use this feature.

Copyright © 1994–2007, Nortel Networks
Nortel Networks Confidential

Copyright © 1994–2007, Nortel Networks
Nortel Networks Confidential

Network Music

Contents

This section contains information on the following topics:

"Feature Description" (page 99)

"Operating parameters" (page 99)

Section "Feature interactions" (page 106)

"Feature packaging" (page 100)

"Feature implementation" (page 100)

Feature Description

The Network Music feature allows CS 1000 systems to support Music on Hold (MOH) features without a locally equipped music source. The feature accesses a central music source in a CS 2100 or CS 1000 in the network via H.323/SIP virtual trunks. The central music source is equipped in a CS 2100 and the same signalling and media flows also apply with the central music source equipped in a CS 1000.

Operating parameters

To maximize resource efficiency, music is broadcast so that multiple parties can share the same music trunk. A maximum of 64 listeners is supported by one music trunk with broadcast music.

Conference music can be configured instead of broadcast by setting the BDCT prompt of the music route to **no**. Up to 29 simultaneous listeners can be supported by a single conference loop with one music trunk assigned.

CS1000E supports only broadcast mode.

Multiple H.323 virtual trunks can be connected to a single DN to access the Central Audio Server, so only one Network Agent is needed.

Copyright © 1994–2007, Nortel Networks
Nortel Networks Confidential

Feature interactions

Feature packaging

There are no new packages associated with this feature. Network Music requires the following existing packages to be installed:

- Music (44)
- Enhanced Music (119)
- Personal Call Assistant (398)

Feature implementation

Task summary list

The following is a summary of the tasks in this section:

1. "LD 11" (page 101)

   Configure the Network Music Agent.

2. "LD 15" (page 101)

   - Configure Net_Data in Customer Data Block.

3. "LD 15" (page 101)

   Configuration of FTR_DATA in Customer Data Block.

4. "LD 16" (page 101)

   Configure the MUS route.

5. "LD 16" (page 102)

   Configure Network Music TIE route.

6. "LD 14 " (page 102)

   Configure Music on Hold (MOH) trunks.

7. "LD 14" (page 103)

   Configure Network Music trunks.

8. "LD 14" (page 103)

   Configure Network Music TIE trunks.

Before Network Music is implemented, configure the central Audio Server so its DN can be dialed within the network. Enable the Music package (44), the Enhanced Music package (119), and the PCA package (398) on all CS 1000 systems accessing the Network Music source. Connect two units on

Copyright © 1994–2007, Nortel Networks
Nortel Networks Confidential

an XUT (NT8D14) trunk card back to back (i.e. Tip lead to Tip lead and Ring lead to Ring lead). Configure the Network Music Agent (PCA) with the target PCA DN to terminate to the external DN of the Audio Server.

LD 11

Prompt	Response	Description
REQ	NEW	New agent
TYPE	PCA	Personal Call Assistant
...		
KEY	0 MCN xxxx	Network Music agent DN
KEY	1 HOT P x yyyyyyy	x - number of DN digits yyyyyyy - target PCA DN including access code if required

LD 15

Prompt	Response	Description
REQ	CHG	Change
TYPE	NET	ISDN and ESN network options
...		
ISDN	YES	Integrated Services Digital Network
VPNI	1	Virtual Private Network Identifier
...		

LD 15

Prompt	Response	Description
REQ	CHG	Change
TYPE	FTR	Features and Options
...		
MUS	YES	Music for sets
MUSR	xx	Music route for sets
...		
PCA	ON	Enable Personal Call Assistant feature
...		

LD 16

Prompt	Response	Description
REQ	NEW	New route
TYPE	RDB	Route Data Block

Copyright © 1994–2007, Nortel Networks
Nortel Networks Confidential

Prompt	Response	Description
...		
TKTP	MUS	Music
...		
ICOG	OGT	Outgoing-only trunk
...		
BDCT	YES	Broadcast music
...		
NEDC	ETH	Either end control
FEDC	ETH	Either end control

LD 16

Prompt	Response	Description
REQ	NEW	New route
TYPE	RDB	Route Data Block
...		
TKTP	TIE	Music trunk
...		
AUTO	YES	Auto terminate
...		
ICOG	ICT	Outgoing-only trunk
...		
NEDC	ETH	Either end control
FEDC	ETH	Either end control

LD 14

Prompt	Response	Description
REQ	CHG	Change
TYPE	RDB	Route Data Block
...		

Copyright © 1994–2007, Nortel Networks
Nortel Networks Confidential

Prompt	Response	Description
MUS	Yes	Music on Hold
MRT	xxxxx	Music Route Number

LD 14

Prompt	Response	Description
REQ	NEW	New trunk
TYPE	MUS	Music trunk
...		
NMUS	YES	Network Music

LD 14

Prompt	Response	Description
REQ	NEW	New trunk
TYPE	TIE	TIE trunk
...		
NUMS	YES	Network Music
...		
ATDN	xxxx	Auto terminate to PCA DN

Feature operation

The Network Music feature allows CS 1000 systems to support MOH features without a locally equipped music source. The feature accesses a central music source in a CS 2100 or CS 1000 in the network via H.323/SIP virtual trunks. The central music source in the following description is equipped in a CS 2100. The same signalling and media flows also apply with the central music source equipped in a CS 1000.

The implementation consists of a central Audio Server to generate music. The Audio Server is accessible within the IP network by dialing a special DN. Music Trunks are installed on the remote nodes and connected back to back with an analog TIE trunk, which is auto terminated to the primary DN of a Network Music Agent. The Network Music Agent forwards the call to the external DN of the Audio Server.

When the music trunk is seized, it is connected to a call to the Audio Server via H.323/SIP virtual trunk. Both broadcast and conference music are configured to allow multiple held parties to share the same music trunk.

Copyright © 1994–2007, Nortel Networks
Nortel Networks Confidential

Copyright © 1994–2007, Nortel Networks
Nortel Networks Confidential

Network Wide Redundancy

Contents

This section contains information on the following topics:

- "Feature Description" (page 105)
- "Operating parameters" (page 106)
- "Feature interactions" (page 106)
- "Feature packaging" (page 106)
- "Feature implementation" (page 106)
- "Feature operation" (page 107)

Feature Description

This feature allows remote IP telephones to normally register with a central switch, the Network Home. The Network Home could be a CS 2100 or a CS 1000. In the normal mode of operation, such IP telephones are under the control of the Network Home and receive telephony services from the Network Home. If the Network Home cannot be reached because of it or the link to it being down, the remote IP telephones will register with a local CS 1000 in local mode and receive telephony services from the local CS 1000. This feature has no package dependency and is available to all systems equipped with the required ISM License Limit. Details of the feature are described in the following sections with the Network Home being a CS 2100. The same description also applies when the Network Home is a CS 1000.

The CS 2100 has dual IP Client Managers, IPCM A and IPCM B. The IP phone is normally registered with IPCM A and received telephony services from IPCM A. If IPCM A is unreachable, the IP phone is registered with IPCM B, and receives telephony services from IPCM B. If both IPCM A and IPCM B are unreachable, the IP phone is registered with the CS 1000, and receives telephony services from the CS 1000. Thus the CS 1000 provides survivability of the IP phones when both IPCM A and IPCM B are unreachable. This feature inter-works with CS 2100 running SE08 or later software or CS 2000 with SN08 or later software that supports a single IP address for registration with IPCM A or IPCM B and the RUDP Ping protocol.

Copyright © 1994–2007, Nortel Networks
Nortel Networks Confidential

Operating parameters

Feature interactions

The Network Wide Redundancy Phase II feature has interaction with the Branch Office feature. If a Branch Office is configured as an endpoint in the NRS, and an IP phone in a node in an IP Network has NUID and NHTN configured to point to a Branch Office, the set will be redirected to the Branch Office and registered as a Branch Office set.

Feature packaging

The Network Wide Redundancy Phase II feature does not require GRPRIM package (404) and GRSEC package (405). However, if survivability is to be provided by a MG 1000B, the SBO package (390) is required.

Feature implementation

Task summary list

The following is a summary of the tasks in this section:

- Main scenario
- Installation of IP telephone

Main scenario

Follow these steps to configure and implement the feature:

1. Configure one of the CS 1000 Signalling Servers to be the PNCS (Primary NCS), and optionally, another to be the Alternate NCS.
2. Configure the single IP address of each CS 2100 as a non-RAS endpoint in the Primary NCS for IP telephone redirection from the CS 1000.
3. Configure all CS 1000 IP nodes in the network as non-RAS endpoints in the Primary NCS (and in the Alternate NCS if configured).
4. Provision the Primary NCS (and the Alternate NCS if configured) with route entries for CS 2100 and CS 1000s for IP telephone redirection.
5. Configure the IP phones in CS 1000 including NUID and NHTN in set data.

UC 14 Command Definitions - Configuration of NUID and NHTN

Prompt	Response	Description
CUST	x	Customer number
NUID	yyyyy	Network dialable DN
NHTN	0 0 0 0	Network Home TN 0 0 0 0 is a reserved TN to indicate the Network Home is a CS 2100. It must not be used if the Network Home is a CS 1000. SCH1600 message is printed to inform users that TN 0 0 0 0 is reserved for CS 2100 Network Home if TN 0 0 0 0 is entered as response to the NHTN prompt.

Copyright © 1994–2007, Nortel Networks
Nortel Networks Confidential

Installation of IP telephone

Follow the steps below to install the IP telephone

1. Program the IP address of the IP telephone.
2. Program S1 and S2 of the IP telephone to point to the node IP address of the CS 1000 with port 4100.
3. Program the node identity and the CS 1000 TN on the IP telephone.
4. The IP telephone registers with the CS 1000 and is redirected to the CS 2100.

S1 is overwritten to point to the single IP address of the CS 2100 with port 5000 after the first redirection to the CS 2100.

Feature operation

No specific operating procedures are required to use this feature.

Copyright © 1994–2007, Nortel Networks
Nortel Networks Confidential

Copyright © 1994–2007, Nortel Networks
Nortel Networks Confidential

New Flexible Code Restriction

Contents

This section contains information on the following topics:

"Feature description" (page 109)

"Operating parameters" (page 110)

"Feature interactions" (page 110)

"Feature packaging" (page 112)

"Feature implementation" (page 113)

" Feature operation" (page 117)

Feature description

New Flexible Code Restriction (NFCR) controls the access of Toll Denied terminals to outgoing trunk routes and digits dialed on them. Calls are allowed or denied based on the specific digit sequence dialed.

Toll Denied (TLD, CTD, CUN) telephones and trunks are assigned a Network Class of Service (NCOS) and are allowed or denied calling privileges according to the Facility Restriction Level (FRL) assigned to their NCOS. If, however, a user who has CTD or CUN Class of Service has dialed the call using a Basic Alternate Route Selection (BARS), Network Alternate Route Selection (NARS), Coordinated Dialing Plan (CDP), or Automatic Number Identification (ANI) access code, the NFCR restrictions do not apply. For these users, NFCR applies only on direct trunk access code type calls. TLD users are always affected no matter how their call is dialed.

When a user accesses an outgoing route, the user's assigned FRL determines which digits are allowed or denied on that route. Up to eight FRL codes can be assigned per trunk route. When a user dials denied digits

Copyright © 1994–2007, Nortel Networks
Nortel Networks Confidential

following direct trunk access codes, intercept treatment is given. NFCR can be programmed to deny certain outpulsed digits, not dialed digits, when Electronic Switched Network (ESN) calls are to be denied for TLD users.

Using "code restriction trees," NFCR can be programmed to analyze each digit individually and allow or deny a call on the basis of any digit or digit sequence dialed. There can be up to 255 code restriction trees per customer group. Each trunk route can access up to eight trees, and each tree can be used by more than one route. The code restriction tree corresponding to the terminal user's FRL is defined by the trunk route. Digits can also be bypassed and allowed to process with no restriction; however, certain digits that follow these might be restricted.

NFCR can be programmed to count the number of digits dialed and deny any call exceeding the specified number of digits. If a user dials an octothorpe (#) before NFCR has finished digit counting, the call is disallowed and intercept treatment is given. This prevents digits from 2500 sets or Dual-tone Multifrequency (DTMF) trunks from being outpulsed before being counted or analyzed by code restriction. Up to 50 digits can be analyzed.

Operating parameters

New Flexible Code Restriction (NFCR) can be programmed to count the number of digits dialed and deny any call exceeding the specified number of digits.

Only the digits zero (0) through nine (9) are considered. If a user dials an asterisk (*), it is not counted as a dialed digit. If the user dials an octothorpe (#) before NFCR has finished digit counting, the call is disallowed and the appropriate intercept treatment is provided. This prevents digits from 2500-type telephones or Dual-tone Multifrequency (DTMF) trunks from being outpulsed before being counted or analyzed by code restriction.

As many as 255 code restriction trees are available per customer. Eight code restriction trees can be referenced by each trunk route.

Up to 50 digits can be analyzed by NFCR.

When Code Restriction (LD 19) and NFCR (LD 49) are both enabled for the same customer, NFCR takes precedence. Any parameters required for Code Restriction are ignored.

Feature interactions

Access Restrictions

The Code Restriction feature and New Flexible Code Restriction cannot be implemented simultaneously for the same customer.

Copyright © 1994–2007, Nortel Networks Nortel Networks Confidential

Attendant Blocking of Directory Number

When the attendant has a blocked DN on the source side and dials on the destination side, any New Flexible Code Restriction active for the set of the blocked DN will be overridden. This is the same as if the attendant had a normal established call to the DN on the source side and dials the destination side.

Authorization Code Security Enhancement

If the Class of Service of the authorization code is Toll Denied (TLD), NFCR is applied. If the Class of Service is Conditionally Unrestricted (CUN) or Conditionally Toll Denied (CTD) and the call is not routed through BARS/NARS, CDP or ANI, NFCR is applied.

Automatic Number Identification

Calls from Toll Denied (TLD) stations routed by Automatic Number Identification (ANI) are subject to NFCR. Calls placed by Conditionally Toll Denied (CTD) and Conditionally Unrestricted (CUN) Class of Service stations subject to ANI are treated as unrestricted calls.

Automatic Redial

Automatic Redial (ARDL) calls must pass New Flexible Code Restriction (NFCR) checks. If the redialed number is restricted, the ARDL request is cancelled.

Basic Alternate Route Selection (BARS), Network Alternate Route Selection (NARS), Coordinated Dialing Plan (CDP)

Only TLD telephones are subject to NFCR when calls are routed by BARS/NARS/CDP. CTD and CUN calls routed by BARS/NARS/CDP are not subject to NFCR treatment.

China - Flexible Feature Codes - Outgoing Call Barring, Enhanced Flexible Feature Codes - Outgoing Call Barring

Outgoing Call Barring uses NFCR trees to define the digit sequences that are not allowed for each level of barring. However, OCB analyses all dialed digits, whereas NFCR only analyses digits outpulsed on trunks. This means that the same tree will not normally be usable for both features, unless only Coordinated Dialing Plan trunk calls are to be blocked for both features and no digit manipulation is done.

Digital Private Network Signaling System (DPNSS1)/Digital Access Signaling System (DASS2) Uniform Dialing Plan (UDP) Interworking

Toll-denied users (CLS = TLD) may be subject to NFCR if they make a NARS call across the DPNSS1 UDP network. The New Flexible Code Restriction feature is supported in a DPNSS1 UDP network.

Copyright © 1994–2007, Nortel Networks
Nortel Networks Confidential

Direct Inward System Access

If the Direct Inward System Access (DISA) DN has a TLD, CUN, or CTD Class of Service, calls made through DISA are eligible for NFCR treatment.

Electronic Lock Network Wide/Electronic Lock on Private Lines

With NFCR, toll denied stations are allowed or denied calling privileges according to the Facility Restriction Level (FRL) assigned to the NCOS defined in the protected line block. For a locked set, NCFR uses the FRL assigned to the CNCS to determine its calling privileges if one is defined; if no CNCS is defined, the NCOS of the locked set will be used.

Federal Communications Commission Compliance for Equal Access

The New Flexible Code Restriction (NFCR) feature has been modified to allow for the restriction of Equal Access international toll calls (10XXX+011+CC+NN) while not restricting Equal Access operator calls (10XXX+0).

Forced Charge Account

Calls placed through the Forced Charge Account feature are not eligible for NFCR treatment.

Network Class of Service

Toll Denied stations and trunks must have a Network Class of Service (NCOS) assigned to be allowed or denied calling privileges by NFCR. This is because the FRL associated with the NCOS of the user determines which codes are allowed or denied on an outgoing trunk call. The range of NCOS groups varies as follows:

(0)-3 for standalone CDP
(0)-7 for BARS/CDP and NFCR
(0)-15 for NARS and NFCR
(0)-99 for BARS/NARS/CDP/NFCR

Scheduled Access Restrictions

Associating an FRL with a different NFCR tree affects any Network Class of Service (NCOS) that uses that FRL. Each such NCOS assigned to a Scheduled Access Restrictions (SAR) group might need to be reconsidered. Also, different facility restriction levels and NFCR trees are used at different times according to the NCOS assigned to the SAR group.

Feature packaging

New Flexible Code Restriction (NFCR) package 49 requires:

- Network Class of Service (NCOS) package 32.

Copyright © 1994–2007, Nortel Networks
Nortel Networks Confidential

Feature implementation

Task summary list

The following is a summary of the tasks in this section:

1. "LD 15" (page 113)

   Enable NFCR for a customer.

2. " LD 87" (page 114)

   Define NCOS groups and associated FRL.

3. " LD 49" (page 114)

   Add, change, or print code restriction trees.

4. " LD 16" (page 114)

   Associate an FRL with a code restriction tree.

5. " LD 10" (page 115)

   Assign an analog (500/2500-type) telephone a Toll Denied and Network Class of Service.

6. " LD 11" (page 115)

   Assign Meridian 1 proprietary telephones a Toll Denied and Network Class of Service.

7. " LD 14" (page 116)

   Assign a trunk a Toll Denied and Network Class of Service.

8. " LD 24" (page 116)

   Assign a DISA data block a Toll Denied and NCOS.

9. " LD 88" (page 116)

   Assign an Authorization code a Toll Denied and NCOS.

LD 15

Prompt	Response	Description
REQ:	CHG	Change.
TYPE:	FCR	New Flexible Code Restriction options.
CUST		Customer number
	0-99	Range for Large System and CS 1000E system.
	0-31	Range for Small System and Media Gateway 1000B.

Copyright © 1994–2007, Nortel Networks
Nortel Networks Confidential

Prompt	Response	Description
NFCR	(NO) YES	(Disable) enable NFCR.
- MAXT	1-255	Maximum number of code restriction trees.

LD 87

Prompt	Response	Description
REQ	NEW CHG	Create new, or change.
CUST	xx	Customer number, as defined in LD 15
FEAT	NCTL	Network Control.
NCOS	(0)-99	NCOS group.
FRL	0-7	FRL is assigned to each NCOS. It determines the entries in a route list (RLI) to which it has access. 0 is the most restrictive, 7 is the least restrictive and can access more entries.

LD 49

Prompt	Response	Description
REQ	NEW CHG PRT	Create new, change, or print data.
TYPE	FCR	NFCR data block.
CUST	xx	Customer number, as defined in LD 15
CRNO	(0)-254	Code restriction tree number.
INIT	ALOW DENY	Allow or deny all codes.
The following prompts appear if INIT = ALOW		
DENY	xx...xx	Digit sequence to be denied.
ALOW	xx...xx	Digit sequence to be allowed.
BYPS	xx...xx	Digit sequence to be bypassed.
The following prompts appear if INIT = DENY		
ALOW	xx...xx	Digit sequence to be allowed.
DENY	xx...xx	Digit sequence to be denied.
BYPS	xx...xx	Digit sequence to be bypassed

LD 16

Prompt	Response	Description
REQ	CHG	Change.
TYPE	RDB	Route Data Block.
CUST	xx	Customer number, as defined in LD 15
ROUT		Route number

Copyright © 1994–2007, Nortel Networks
Nortel Networks Confidential

Prompt	Response	Description
	0-511	Range for Large System and CS 1000E system.
	0-127	Range for Small System and Media Gateway 1000B.
FRL	x yyy	x = FRL number (0-7). yyy = code restriction tree number (1-255). FRL is reprompted to allow input of eight FRLs. A carriage return causes the next prompt to appear .

LD 10

Prompt	Response	Description
REQ:	CHG	Change.
TYPE:	500	Telephone type.
TN		Terminal number
	l s c u	Format for Large System and CS 1000E system, where l = loop, s = shelf, c = card, u = unit.
	c u	Format for Small System and Media Gateway 1000B where c = card and u = unit.
NCOS	(0)-99	NCOS.
CLS	TLD	Toll Denied Class of Service.

LD 11

Prompt	Response	Description
REQ:	CHG	Change.
TYPE:	a...a	Telephone type. Type **?** for a list of possible responses.
TN		Terminal number
	l s c u	Format for Large System and CS 1000E system, where l = loop, s = shelf, c = card, u = unit.
	c u	Format for Small System and Media Gateway 1000B where c = card and u = unit.

Copyright © 1994–2007, Nortel Networks
Nortel Networks Confidential

Prompt	Response	Description
NCOS	(0)-99	NCOS.
CLS	TLD	Toll Denied Class of Service.

LD 14

Prompt	Response	Description
REQ	CHG	Change.
TYPE	aaa	Trunk type, where: aaa = CSA, TIE, or WAT.
TN		Terminal number
	l s c u	Format for Large System and CS 1000E system, where l = loop, s = shelf, c = card, u = unit.
	c u	Format for Small System and Media Gateway 1000B where c = card and u = unit.
NCOS	(0)-99	NCOS.
CLS	TLD	Toll Denied Class of Service.

LD 24

Prompt	Response	Description
REQ	CHG	Change.
TYPE	DIS	DISA data block.
CUST	xx	Customer number, as defined in LD 15
SPWD	xxxx	Security password.
DN	xxx....x	DISA Directory number.
NCOS	(0)-99	NCOS.
COS	TLD	Toll Denied Class of Service.

LD 88

Prompt	Response	Description
REQ	CHG	Change.
TYPE	AUB	Authorization code data block.
CUST	xx	Customer number, as defined in LD 15
SPWD	xxxx	Security password.
CLAS	(0)-115	Class code to be assigned.

Copyright © 1994–2007, Nortel Networks
Nortel Networks Confidential

Prompt	Response	Description
NCOS	(0)-99	NCOS.
COS	TLD	Toll Denied Class of Service.

Feature operation

No specific operating procedures are required to use this feature.

Copyright © 1994–2007, Nortel Networks
Nortel Networks Confidential

Copyright © 1994–2007, Nortel Networks
Nortel Networks Confidential

Night Key for Direct Inward Dialing (DID) Digit Manipulation

Contents

This section contains information on the following topics:

"Feature description" (page 119)

"Operating parameters" (page 120)

"Feature interactions" (page 120)

"Feature packaging" (page 121)

"Feature implementation" (page 121)

" Feature operation" (page 123)

Feature description

The Night Key for DID Digit Manipulation (NKDM) uses DID Incoming Digit Conversion (IDC) to convert received DID digits into a Night Service Directory Number (DN). NKDM is used to switch between Night and Day modes.

The Day/Night mode is controlled by a DID Route Control (DRC) key on an attendant console, or Meridian 1 proprietary telephone. There can only be one DRC key for each DID route.

The Night tree table is invoked in any of the following ways:

- when the attendant goes into Night Service, or the last attendant activates the POS BUSY key (provided that Attendant Overflow Position is not equipped)
- when an attendant activates the DID Route Control (DRC) key
- when a Console Presentation Group (CPD) attendant goes into Night Service, or

Copyright © 1994–2007, Nortel Networks
Nortel Networks Confidential

- when a Meridian 1 proprietary telephone activates the DRC key.

In each case, only the DID routes controlled by the initiating source (console or telephone) are affected.

Operating parameters

The maximum number of conversion tables per customer is 255. These tables are shared between the Incoming Digit Conversion (IDC) and the New Flexible Code Restriction (NFCR) trees.

When an attendant activates the DID Route Control Key (DRC), the M2250 attendant console going into Day/Night mode does not change the Incoming Digit Conversion (IDC) table that is used. The DRC takes precedence over the M2250 Console and ignores the M2250 state if a DRC is assigned.

The DRC key can only be configured on keys with lamp indicators.

For each DID route, there is only one configured DRC key per telephone.

When using the Night tree table, the same assumptions that apply to Incoming Digit Conversion (IDC) apply to this feature. The Night tree table for DID Digit Manipulation (NKDM) applies only to DID routes.

For a Dialed Number Identification Service (DNIS) route, make sure that the correct table is selected for the conversion of incoming digits.

Feature interactions

Attendant Administration

The DID Route Control (DRC) key is not supported by Attendant Administration.

Attendant Overflow Position

When the last attendant activates the POS BUSY key, the system does not go into Night Service if an Attendant Overflow Position Directory Number (DN) is available.

Automatic Set Relocation

Delete the DRC key from a telephone before performing Automatic Set Relocation. If this is not done, the DRC lamp is activated on the wrong telephone.

Console Presentation Group Level Services

The Day/Night table can be activated with the DRC key by any attendant in the Console Presentation Group (CGP).

Copyright © 1994–2007, Nortel Networks Nortel Networks Confidential

Feature packaging

The Night Key for DID Digit Manipulation (NKDM) is part of base system software. The following packages are required:

- Network Class of Service (NCOS) package 32
- New Flexible Code Restriction (NFCR) package 49, and
- Incoming Digit Conversion (IDC) package 113.

Feature implementation

Task summary list

The following is a summary of the tasks in this section:

1. "LD 15" (page 121)

   Enable Incoming Digit Conversion for Night mode.

2. " LD 49" (page 122)

   Add, change, or print code restriction trees.

3. " LD 16" (page 122)

   Set IDC tree for Night mode. Note that a DID route cannot be removed if it is controlled by a DCR key.

4. " LD 12" (page 122)

   Define a DID Route Control (DRC) key on an attendant console.

5. " LD 11" (page 123)

   Define a DRC key on a Meridian 1 proprietary telephone.

LD 15

Prompt	Response	Description
REQ:	CHG	Change.
TYPE:	CDB FCR	Customer Data Block. New Flexible Code Restriction options
CUST		Customer number
	0-99	Range for Large System and CS 1000E system.
	0-31	Range for Small System and Media Gateway 1000B.
NFCR	(NO) YES	Enable New Flexible Code Restriction.
- MAXT	1-255	Maximum number of NFCR trees.

Copyright © 1994–2007, Nortel Networks
Nortel Networks Confidential

Prompt	Response	Description
IDCA	(NO) YES	Enable IDC. IDC cannot be disabled if any telephone has a DCR key.
- DCMX	1-255	Maximum number of IDC conversion tables. The sum of the values of MAXT and DCMX cannot exceed 255 per customer.

LD 49

Prompt	Response	Description
REQ	NEW CHG PRT	Create new, change, or print data.
TYPE	IDC	NFCR data block.
CUST	xx	Customer number, as defined in LD 15
DCNO	0-254	IDC tree number.
IDGT	0-9999 0-9999	Directory Number (DN) or range of DNs to be converted. The external DN to be converted is output and the user enters the internal DN. For example, to convert the external DN 3440 to 510, enter 3440. The system prompts 3440 and you enter 510.

LD 16

Prompt	Response	Description
REQ	CHG	Change.
TYPE	RDB	Route Data Block.
TKTP	DID	DID route.
IDC	(NO) YES	Enable IDC.
DCNO	0-254	IDC tree for Day mode.
NDNO	0-254 <CR>	IDC tree for Night mode. Set tree to the same number as Day mode (the default).

LD 12

Prompt	Response	Description
REQ	CHG	Change.
TYPE	2250	Attendant console type.
TN		Terminal number
	l s c u	Format for Large System and CS 1000E system, where l = loop, s = shelf, c = card, u = unit.

Copyright © 1994–2007, Nortel Networks
Nortel Networks Confidential

Prompt	Response	Description
	c u	Format for Small System and Media Gateway 1000B where c = card and u = unit.
KEY	xx DRC	DID Route Control key, where: xx = key number 0-9 (0-19 on the M2250).

LD 11

Prompt	Response	Description
REQ:	CHG	Change.
TYPE:	a...a	Telephone type. Type **?** for a list of possible responses.
TN		Terminal number
	l s c u	Format for Large System and CS 1000E system, where l = loop, s = shelf, c = card, u = unit.
	c u	Format for Small System and Media Gateway 1000B where c = card and u = unit.
KEY	xx DRC yyy	DRC, where: xx = key number, and yyy = route number (0-511).

Feature operation

Follow these steps to change one DID route to Day/Night mode from the attendant console:

Step	Action
1	Select an idle loop key.
2	Press **DRC** and dial the access code of the DID route (ACOD). If the DRC indicator is on steadily, the route is in Day mode. If the DRC indicator is flashing, the route is in Night mode.
3	Press **DRC** again. If the DRC indicator was on steadily, the route is put into Night mode. If the DRC indicator was flashing, the route is put into Day mode.

—End—

Copyright © 1994–2007, Nortel Networks
Nortel Networks Confidential

Follow these steps to change all DID routes to Day/Night mode from the attendant console:

Step	Action
1	Select an idle loop key.
2	Press **DRC** and dial the octothorpe (#). If the DRC indicator is on steadily, all routes are in Day mode. If the DRC indicator is flashing, one or more routes are in Night mode.
3	Press **DRC** again. If the DRC indicator was on steadily, all routes are put into Night mode. If the DRC indicator was flashing, all routes are put into Day mode. To change from some routes in Night mode to all routes in Night mode, you must first put all routes into Day mode.

—End—

Follow these steps to change one DID route to Day/Night mode from a telephone:

Step	Action
1	Check the **DRC** indicator. If the DRC indicator is on steadily, the route is in Day mode. If the DRC indicator is flashing, the route is in Night mode.
2	Press **DRC**. The route toggles between Night and Day mode.

—End—

Copyright © 1994–2007, Nortel Networks
Nortel Networks Confidential

Night Restriction Classes of Service

Contents

This section contains information on the following topics:

"Feature description" (page 125)

"Operating parameters" (page 125)

"Feature interactions" (page 125)

"Feature packaging" (page 126)

"Feature implementation" (page 126)

"Feature operation" (page 128)

Feature description

The purpose of the Night Restriction Classes of Service (NRCLS) feature is to restrict the operation of the Call Waiting, Forced Camp-on, and Priority Override features so they operate during Night Service only. Therefore, the NRCLS feature will apply to any set which has Call Waiting, Forced Camp-on, or Priority Override features equipped.

Operating parameters

The Night Restriction Classes of Service (NRCLS) feature is available on any station.

Feature interactions

Call Waiting

If Call Waiting and Night Restriction for Call Waiting Class of Service (NRWA) are assigned, Call Waiting will be operational for the set only when Night Service is in effect.

Copyright © 1994–2007, Nortel Networks
Nortel Networks Confidential

Call Waiting Redirection

The Call Waiting Redirection feature applies to unanswered calls given Call Waiting treatment when the Night Restriction Classes of Service feature allows Call Waiting.

Camp-on, Forced

If Forced Camp-on and Night Restriction for Forced Camp-on Class of Service (NRCA) are assigned, Forced Camp-on will be operational for the set only when Night Service is in effect.

Override

If Priority Override and Night Restriction for Priority Override Class of Service (NROA) are assigned, Priority Override will be operational for the set only when Night Service is in effect.

Feature packaging

The Night Restriction Classes of Service feature is packaged under the Supplementary Features (SUPP) package 131.

Feature implementation

Task summary list

The following is a summary of the tasks in this section:

1. "LD 10 and LD 11 " (page 126)

   These overlays are modified to accept the following six new classes of service: NRCD, NRCA, NROD, NROA, and NRWD, NRWA.

2. "LD 81 " (page 127)

   This overlay prints DES to TN and last service change information for selected features. The classes of service NRCA, NRCD, NROA, NROD, NRWA, and NRWD are now allowed.

LD 10 and LD 11

Prompt	Response	Description
REQ:	CHG NEW	Change, or add.
...		
CLS		Class of Service.

Copyright © 1994–2007, Nortel Networks
Nortel Networks Confidential

Prompt	Response	Description
	(NRCD) NRCA	Night Restriction of forced Camp-on (Denied) Allowed. Forced Camp-on must be configured for the set. Assigning NRCD Class of Service allows Forced Camp-on to operate during both Night and Day Service. Assigning NRCA Class of Service restricts Forced Camp-on to operate during Night Service only. Default is NRCD.
	(NROD) NROA	Night Restriction of priority Override (Denied) Allowed. Priority Override must be configured for the set. Assigning NROD Class of Service allows Priority Override to operate during both Night and Day Service. Assigning NROA Class of Service restricts Priority Override to operate during Night Service only. Default is NROD.
	(NRWD) NRWA	Night Restriction of call Waiting (Denied) Allowed. Call Waiting must be configured for the set. Assigning NRWD Class of Service allows Call Waiting to operate during both Night and Day Service. Assigning NRWA Class of Service restricts Call Waiting to operate during Night Service only. Default is NRWD.

LD 81

Prompt	Response	Description
REQ	LST	List telephones equipped with the feature specified by the prompt FEAT.
	CNT	Print a count of telephones equipped with the feature specified by the prompt FEAT.
	END	End overlay activity.
CUST	xx	Customer number, as defined in LD 15
DATE	1-31 Jan-Dec	Print data from activity date specified.
	ACT	Print data from last activity date.
	<CR>	Disregard date restrictions.
PAGE	(NO) YES	Print data on a per page basis.

Copyright © 1994–2007, Nortel Networks
Nortel Networks Confidential

Prompt	Response	Description
DES	XXXXXX X+ + <CR>	Print station with designator XXXXXX. Print data for stations with designators starting X. Print data for all stations with no designator. Print data for all stations with designators.
FEAT	NRCA NRCD NROA NROD NRWA NRWD	Night Restriction of Forced Camp-on Allowed, or Denied. Night Restriction of Priority Override Allowed, 0r Denied. Night Restriction of Call Waiting Allowed, or Denied.

Feature operation

A customer or a Console Presentation Group (CPG) can be put into Night Service manually by pressing the Night key on the attendant console or automatically by Scheduled Access Restriction (SAR) or Attendant Forward No Answer (AFNA).

Depending on the Class of Service (CLS) and key assignments, the operation of the features will be allowed or denied as summarized in the following table:

Figure 1
Feature operation summary

CLS	Feature X Allowed	Feature X Denied
NRXA	Feature **X** is restricted to operate during Night Service only.	Feature **X** always denied.
NRXD	Feature **X** operates whether Night Service is active or not.	Feature **X** always denied.

Legend:
NR**X**A:Night Restriction of feature **X** Allowed for this set.
NR**X**D:Night Restriction of feature **X** Denied for this set.

Where **X** =:
W for Call Waiting
C for Forced Camp-on, or
O for Priority Override.

Copyright © 1994–2007, Nortel Networks
Nortel Networks Confidential

Night Service

Contents

This section contains information on the following topics:

"Feature description" (page 129)

"Operating parameters" (page 130)

"Feature interactions" (page 131)

"Feature packaging" (page 134)

"Feature implementation" (page 134)

"Feature operation" (page 135)

Feature description

Night Service permits incoming calls normally directed to the attendant to be routed to a defined destination. A separate Night key/lamp pair allows the attendant to put the system into Night Service.

Three types of Night Service are provided which the customer can specify separately or in any combination:

- Selected Trunks to Selected Directory Number (DNs): Some or all of the trunks can be assigned to ring selected DNs when the system is in Night Service. The assignment of trunks to stations can be modified by the attendant or by a service change.
- Night Answer Telephone: All calls normally routed to the attendant console can be routed to one particular DN that is designated as the night answer destination for the customer. Trunk Answer From Any Station (TAFAS) can be used to pick up calls routed to this number. With TAFAS in effect, incoming calls activate a common alerting device, such as a bell, when the system is in Night Service. Any user can answer the call by dialing the Special Prefix (SPRE) code and then pressing 4.

Copyright © 1994–2007, Nortel Networks
Nortel Networks Confidential

- Night Service by Time of Day (NSTD): NSTD allows one of a group of Directory Numbers (DNs) to be selected for call routing based on the time of day instead of all calls being routed to a fixed Night Service DN. NSTD allows the definition of up to four Night DNs with a time associated with each. Calls are forwarded to the appropriate DN by the associated time.

Operating parameters

Night Service can only be activated from the attendant console.

Any restrictions or features assigned to the night answering station apply. Therefore, a fully restricted (FRE) Class of Service should not be used for Night Service Directory Numbers (DNs), unless the FRPT prompt in LD 17 is OLFR (allow FRE telephones to serve as a Night DN).

A bell circuit or alerting device must be provided by the customer for TAFAS. This device must be compatible with the 20 Hz ringing signal (that is, two seconds on, four seconds off).

If a trunk is assigned a Night DN other than the Night Answer Number defined in the Customer Data Block, incoming calls to that trunk cannot be picked up with the TAFAS feature. Assignment in LD 14 takes precedence over the Customer Data Block.

If an attendant is not assigned to a customer, the customer is automatically in Night Service upon system start-up. The following tables show how calls are directed during Night Service, depending on the time of day:

Call is directed to Night DN	Between times:
NIT1 DN	TIM1 and TIM2
NIT2 DN	TIM2 and TIM3
NIT3 DN	TIM3 and TIM4
NIT4 DN	TIM4 and TIM1

It is possible to remove a defined night DN without modifying the other DNs. For example, if NIT3 is removed, calls are directed as follows:

Call is directed to Night DN	Between times:
NIT1 DN	TIM1 and TIM2
NIT2 DN	TIM2 and TIM4
NIT4 DN	TIM4 and TIM1

Copyright © 1994–2007, Nortel Networks
Nortel Networks Confidential

Feature interactions

Attendant Overflow Position

A call rerouted through the Attendant Overflow Position feature is not redirected to the Night DN if the system is subsequently put into Night Service. When all attendant consoles are in Position Busy, the system will not go into Night Service until the AOP Busy key is activated.

Deactivating the AOP Busy key after the system has been placed in Night Service does not affect the Night Service feature.

Attendant Position Busy

When the last console operator activates the Position Busy key or the Night key, Night Service is put into effect. Incoming calls receive the customer-specified night treatment.

Automatic Wake Up

Unanswered Automatic Wake Up calls going through Attendant Recall are discarded if the attendant console is in the Night Service mode. Automatic Wake Up may still be programmed when the attendant console is in Night Service.

Call Forward Busy

When the system is in Night Service, Direct Inward Dialing calls forwarded by Call Forward Busy are routed to the specified night number. If the night telephone is busy, subsequent calls receive busy tone.

Call Pickup Network Wide

The Call Pickup Network Wide feature can be used to pick up a call to the night number if it is ringing an ordinary station (that is, analog (500/2500-type) telephone, 16-button Dual-tone Multifrequency, or proprietary set).

Call Waiting Redirection

Night Service has the same interaction with the Call Waiting Redirection feature as attendant-extended calls. Because the Call Waiting Redirection feature applies CFNA treatment to a Call Waiting call, the Call Waiting Redirection feature also has precedence over the Call Waiting recall timer.

Calls Waiting in Attendant Queue

Incoming calls ringing at the attendant console at time changeover are routed to the Night DN that just expired. New calls are routed to the new Night DN. If the attendant cancels Night Service, new calls are presented to the attendant console.

Once a call begins ringing at a Night DN, it stays there even if Night Service is cancelled or the timer expires.

Copyright © 1994–2007, Nortel Networks
Nortel Networks Confidential

Departmental Listed Directory Number

Departmental Listed Directory Number does not affect Night Service (including TAFAS). Calls presented to the LDN from an external source will queue for the night bell. All other attendant calls receive busy treatment if the night Directory Number (DN) is busy.

Directory Number Expansion

If the Directory Number Expansion (DNPX) package is equipped, the Night DNs can be up to seven digits; otherwise, the DN can be a maximum of four digits.

Distinctive/New Distinctive Ringing

Incoming calls terminating on a night Directory Number (DN) ring distinctively.

DPNSS1 Diversion

If a diverted call encounters an attendant in night service, the call receives Night Service Diversion if available.

End-to-End Signaling

Night Service works together with Attendant End-to-End Signaling (AEES). However, do not press this feature key while using AEES, or the Dual-tone Multifrequency (DTMF) code signals may be blocked.

Equi-distribution Network Attendant Service Routing

When the attendant goes into Night Service, calls presented to the attendant receive NAS routing in an attempt to reach another attendant that is in day service, rather than being routed to the local night DN.

Manual Line Service

When the system is in Night Service (NSVC) mode, all telephones with a manual Class of Service are routed to the telephone designated as the night number for the customer group.

Meridian 911 Call Abandon

Abandoned calls can be forwarded to the Night Call Forward DN if the Night Forward DN is an ACD DN. If a primary answering center goes into Night Service while there are abandoned calls in the queue, those abandoned calls are dropped. A CDR N record is printed if CDR is configured.

Multi-Party Operations

During Night Service, mishandled calls are routed to the night DN. External calls, other than DID calls, are queued until answered. TIE calls are disconnected if the night DN is busy.

Copyright © 1994–2007, Nortel Networks
Nortel Networks Confidential

Night Service

If the system is in Night Service mode, mishandled calls which are routed to the attendant are rerouted to the appropriate Night Service DN. External trunk calls, other than DID, are queued till they are answered.

TIE trunk calls are not queued at the Night Service DN. If the Night Service DN is busy, TIE calls are disconnected.

Night Service Enhancements

When the Night Service key is pressed on any attendant console, the customer enters Night Service and all attendant consoles are made Position Busy. It is then necessary to check all consoles for presented but unanswered calls, which must be cleared and requeued.

Recorded Overflow Announcement

The Recorded Overflow Announcement feature is inactive when the system is in Night Service.

Series Call

If the attendant extends a Series Call and goes into Night Service before it recalls to the attendant, the call recalls to the night DN and Series Call treatment is cancelled.

Trunk to Trunk Connection

If an attendant is placed in Night Service, calls to the attendant are directed to a station with the Night DN. Recalls are not directed to the Night DN. Recalls are put in the attendant call waiting queue when in Night Service.

Position Busy

When all attendants activate the Position Busy key, Night Service is in effect unless the Attendant Overflow Position (AOP) feature is equipped. If AOP is equipped, the Night key must be pressed to invoke Night Service. A call that is rerouted due to AOP is not redirected to the Night DN if the system is subsequently put into Night Service.

Night Service by Time of Day (NSTD) interactions

Call Park Recall

Calls parked by the attendant recall on the Night Service DN that is current at the time of recall.

Calls Waiting in Attendant Queue

Incoming calls ringing at the attendant console at time changeover are routed to the Night DN that just expired. New calls are routed to the new Night DN. If the attendant cancels Night Service, new calls are presented to the attendant console.

Copyright © 1994–2007, Nortel Networks
Nortel Networks Confidential

Once a call begins ringing at a Night DN, it stays there even if Night Service is cancelled or the timer expires.

Multi-Tenant Night Service

The same conditions that apply to the customer night number also apply to the Multi-Tenant Night Service. Console Presentation Group (CPG) allows separate night treatment for each tenant.

Meridian 911 Call Abandon

Abandoned calls are part of the transition mode when agents go to Night Service and the supervisor selects transition mode.

Series Call

If the attendant extends a Series Call and goes into Night Service before it recalls to the attendant, the call recalls to the night DN and Series call treatment is canceled.

Trunk Answer from Any Station

When a DN changeover occurs while an incoming call is ringing the current Night DN and a new incoming call is ringing the new Night DN, a user activating Trunk Answer from Any Station (TAFAS) picks up the call from the Night DN that just expired. However, if the ringing call is not picked up within one minute after the Night DN time changeover, the user can no longer pick up the call using TAFAS.

Trunk to Trunk Connection

If an attendant is placed in Night Service, calls to the attendant are directed to a station with the Night DN. Recalls are not directed to the Night DN. Recalls are put in the attendant call waiting queue when in Night Service.

Feature packaging

This feature is included in base system software.

Feature implementation

Task summary list

The following is a summary of the tasks in this section:

1. "LD 15" (page 135)

   Add or change Night Service for a customer.

2. "LD 14" (page 135)

Copyright © 1994–2007, Nortel Networks
Nortel Networks Confidential

Add or change Night Service DN for trunks.

LD 15

Prompt	Response	Description
REQ:	CHG	Change.
TYPE:	NIT	Night Service Options.
CUST		Customer number
	0-99	Range for Large System and CS 1000E system.
	0-31	Range for Small System and Media Gateway 1000B.
- NIT1	xxx...x, X	Night Service DN 1 (enter X to remove). Night Service DN times must be defined in ascending order.
- TIM1	0-23 0-59	DN 1 time (hour and minute).
- NIT2	xxx...x, X	Night Service DN 2 (enter X to remove).
- TIM2	0-23 0-59	DN 2 time (hour and minute).
- NIT3	xxx...x, X	Night Service DN 3 (enter X to remove).
- TIM3	0-23 0-59	DN 3 time (hour and minute).
- NIT4	xxx...x, X	Night Service DN 4 (enter X to remove).
- TIM4	0-23 0-59	DN 4 time (hour and minute).

LD 14

Prompt	Response	Description
REQ	CHG	Change.
TYPE	COT	Trunk type.
TN		Terminal number
	l s c u	Format for Large System and CS 1000E system, where l = loop, s = shelf, c = card, u = unit.
	c u	Format for Small System and Media Gateway 1000B where c = card and u = unit.
NITE	xxx...x, X	Night Service DN for this trunk (enter X to remove).

Feature operation

To place a customer into Night Service:

- Press **Shift** plus at any console, or unplug all handsets and headsets.

To cancel Night Service when all handsets and headsets are unplugged:

- Plug in at least one handset or headset.

Copyright © 1994–2007, Nortel Networks
Nortel Networks Confidential

To cancel Night Service at a console when a handset or headset is plugged in:

- Press **Shift** plus

If all attendant consoles are put in Position Busy, the system automatically goes into Night Service.

Copyright © 1994–2007, Nortel Networks
Nortel Networks Confidential

Night Service Enhancements

Contents

This section contains information on the following topics:

"Feature description" (page 137)

"Operating parameters" (page 139)

"Feature interactions" (page 140)

"Feature packaging" (page 142)

"Feature implementation" (page 143)

"Feature operation" (page 144)

Feature description

Night Service Enhancements introduces the following capabilities:

- All Calls Remain Queued for Night Service
- Recall to Night DN
- Requeuing of Attendant Presented Calls
- Camp-on from Inquiry Call (Station Camp-on)

All Calls Remain Queued for Night Service

This capability ensures that when Night Service is activated all calls in the attendant queue remain queued for Night Service treatment. Depending on the call type, the call may be presented to the Night DN, or continue waiting for the called party to answer. This includes Call Forward No Answer calls, recalls, and transfers to the attendant.

This capability applies to both standalone and networking environments. Within a networking environment, if Network Attendant Service (NAS) is equipped at all nodes, the calls are presented to a remote attendant, remote Night DN, or local Night DN, depending on the NAS configuration.

Copyright © 1994–2007, Nortel Networks
Nortel Networks Confidential

This treatment applies to external calls only, because internal calls are not queued against a remote Night DN. If NAS routing is not involved, external calls are presented to the local Night DN.

Recall to Night DN

If the attendant camps-on party A to a busy set B, then goes into Night Service, the recall goes to the Night DN only if A is an external party (that is, CO, DID, FEX, WATS). This happens for a local camp-on.

For a Meridian Customer Defined Network (MCDN) camp-on with A at the far end of the MCDN NAS network and for a DPNSS1 camp-on with A at the far end of the DPNSS1 network the situation is as follows. If A is an internal party, the recall is left in the attendant queue, and can be answered by the attendant if the attendant returns to day service.

This internal/external difference does not hold true if the International Supplementary Features (SUPP) package 131 is equipped.

Requeuing of Attendant Presented Calls

The Requeuing of Attendant Presented Calls is an enhancement to the Attendant Forward No Answer feature. If a call presented to an attendant console is not answered, pressing the Position Busy key causes the call to be placed in the attendant queue.

If the console is the customer's last-active console, and Attendant Overflow Position (AOP) is active, a ringing call or a Call Waiting recall on the Destination side is disconnected. This ensures that any queued call will be presented at the AOP.

Any call presented at the AOP is not removed from the console and requeued if the Position Busy key is pressed.

The call is removed unanswered only if the Attendant Forward No Answer feature is active. In this case, after the Attendant Forward No Answer time out expires, the call is requeued and the AOP is idled.

All consoles will enter the Position Busy state if the Night Service key is pressed on any of the customer's consoles. Therefore, all consoles should be checked for presented, but unanswered calls, which have been requeued.

Camp-on from Inquiry Call (Station Camp-on)

With this feature, any internal station can camp an external call on to another internal station that is busy. Prior to the introduction of this feature attendant's were the only parties that could camp calls on to busy internal stations. The term internal station includes stations on other nodes within an Meridian Customer Defined Integrated Services Digital Network (MCDN).

Copyright © 1994–2007, Nortel Networks Nortel Networks Confidential

When a transferring party reaches a busy desired internal party, the transferring telephone will receive ringback tone (providing certain conditions are met). When the transferring party completes the transfer, the external (calling) party will Camp-on to the desired party and the external party (an external party is any CO, DID, FEX, or WATS call) will receive ringback tone or announcement.

This feature applies to both standalone and network environments.

Within a network environment, the transferring and Camped-on to stations may be on the same or different nodes, as long as all nodes are configured with Network Station Camp-on.

Operating parameters

Camp-on from Inquiry Call (Station Camp-on)

The restrictions which currently apply to the operation of the Camp-on feature from an attendant console also apply to Camp-on from Inquiry Call (Station Camp-on).

These restrictions are:

- Camp-on will not be permitted if the desired station is in a state other than established (for instance, ringing or dialing).
- Only one call at a time may be Camp-on a busy station.
- Calls cannot Camp-on to a station with the Call Waiting feature configured.
- The station camped-on to will be given Warning Tone only if the customer has Camp-on Tone Allowed (CTA) in the Customer Data Block (LD 15) and the station has Warning Tone Allowed (WTA) Class of Service assigned. If the station has Warning Tone Denied (WTD) Class of Service assigned the Camp-on will take effect without giving any Camp-on Tone to the camped-on to (desired) party.
- The transferring station will receive Busy Tone only if the response to the STCB prompt in the Customer Data Block (LD 15) of the Camped-on to (desired) set is YES. Otherwise, the transferring station will receive ringback tone.

Camp-on Indication

When a call is extended from an attendant to a busy station there is a specific combination of tones and indicator states to identify the Camp-on state.

Copyright © 1994–2007, Nortel Networks
Nortel Networks Confidential

When an inquiry call is made from a station, there is only one way for the user to distinguish between a busy set and an idle ringing set. That way is to ensure that the response to the STCB prompt in the Customer Data Block (LD 15) of the Camped-on to (desired) set is YES. Otherwise, ringback tone is provided in both cases.

Night DN, Recall to Night Directory Number

When the customer goes into Night Service, if the Night DN is idle, only the first call is presented to it.

The Night DN may be defined as a multiple appearance DN with multiple call arrangement; all sets assigned the Night DN should be on the same node.

According to NAS routing, the Night DN defined on a node must be on the given node (local). If for any reason the Night DN is not on the local node Night Service Enhancements (NSE) are no longer supported.

In any case, NAS routing takes precedence over NSE, so if NAS routing is involved the call will be presented to the Night DN defined according to the NAS configuration.

If NAS routing is not involved and the Night DN defined on this node is located at a remote node (NSE no longer supported), the Night DN must be a remote Attendant DN to ensure calls are queued.

Night Service Network Environment

In network configurations with NAS routing, the Night Service Enhancements feature must be configured on each node in the network.

Feature interactions

Attendant Clearing during Night Service

The Night Service Enhancement features take precedence over Attendant Clearing during Night Service.

Attendant Interpositional Transfer

The requeuing of interpositional calls is not allowed. Night Service enhancements do not apply to interpositional calls, which remain on the console until answered.

Attendant Overflow Position

If a call with a ringing party on the destination side is presented at the last-active attendant console, and there is an active Attendant Overflow Position, then the ringing destination will be disconnected when the call is requeued. Likewise, if the call is a Call Waiting recall, Call Waiting will be canceled.

Copyright © 1994–2007, Nortel Networks Nortel Networks Confidential

Call Forward All Calls, Position Busy, Attendant Forward No Answer

Any call which has been presented to the Attendant Overflow Position cannot be removed from the console and requeued by pressing the Make Set Busy (MSB) key. The call will only be removed if the Attendant Forward No Answer feature is active, and the Attendant Forward No Answer Timer has timed out. In this case, the call is requeued and the Attendant Overflow Position is idled.

Call Waiting, Call Forward All Calls, Hunting, Call Forward Busy

Call Waiting, Call Forward All Calls, Hunting, and Call Forward Busy (for DID calls only) all take precedence over Camp-on.

Call Waiting will be applied by Night Service Enhancements to terminate incoming Night calls to busy Night DNs. This will still be done even if the Night DN is an analog (500/2500-type) telephone with Call Waiting Denied (CWD) Class of Service, or if the Night DN is a Meridian 1 proprietary telephone without a Call Waiting (CWT) key assigned.

All telephones will be given Night Call Waiting tone, if the NWT prompt in LD 15 was responded to with "YES," regardless of the Warning Tone (WTA/WTD) Class of Service setting of the telephone. Meridian 1 proprietary telephones will be given Night Call Waiting tone in the handset instead of the speaker buzz given for Call Waiting.

Call Waiting Redirection

Night Service has the same interaction with the Call Waiting Redirection feature as attendant-extended calls. Because the Call Waiting Redirection feature applies CFNA treatment to a Call Waiting call, the Call Waiting Redirection feature also has precedence over the Call Waiting recall timer.

Centralized Attendant Service

Centralized Attendant Service (CAS) takes precedence over Night Service. If a user in a remote node in Night Service deactivates CAS and Camps-on an external call from the night station to a busy DN, and then reactivates CAS, any subsequent Camp-on recalls will be routed to the remote DN.

Dial Impulse Analog (500/2500-type) Telephone

A Dial Impulse analog (500/2500-type) telephone station must have TSA Class of Service to perform a station Camp-on.

Direct Inward System Access

It is not possible to assign a Night Service Group Number to any trunk that is a member of a route that is set to auto-terminate on a Direct Inward System Access DN.

Copyright © 1994–2007, Nortel Networks
Nortel Networks Confidential

Interposition Attendant Calls

This enhancement does not apply to interposition calls, which remain on the console until answered. The requeuing of interpositional calls is not allowed.

Network Attendant Service, Centralized Attendant Service, Attendant Overflow Position

Network Attendant Service (NAS) is mutually exclusive with Centralized Attendant Service and Attendant Overflow Position. The routing configuration for NAS will apply during Night Service. External calls and recalls may be queued to a remote Night DN, if defined. Internal calls and internal recalls queued during Day Service will be dropped, if the Night DN has been defined on a remote node.

For Camp-on from Inquiry Calls, NAS must be equipped at each node of the network.

Night Service

When the Night Service key is pressed on any attendant console, the customer enters Night Service and all attendant consoles are made Position Busy. It is then necessary to check all consoles for presented, but unanswered calls which must be cleared and requeued.

Recall with Priority during Night Service, Network Wide

If Recall with Priority during Night Service is equipped along with either the Night Service Improvement or Enhanced Night Service feature, calls are processed according to priority.

Trunk to Trunk Connection

Recalls made while the attendant is in Night Service are routed to the Night DN, if the original call is an external call. In such a case, the destination party is disconnected, the internal network trunk is released and the original extended call is presented to the Night DN. If the original call is internal, recalls are put in the attendant call waiting queue when in Night Service.

Feature packaging

The All Calls Remain Queued for Night Service, Recall to Night DN, and Requeuing of Attendant Presented Calls Night Service Enhancements are packaged as part of the International Supplementary Features (SUPP) package 131 for standalone applications. For network applications, the requirements are the International Supplementary Features (SUPP) package 131 and the Network Attendant Service (NAS) package 159 and its prerequisites.

For standalone Camp-on from Inquiry Call (Station Camp-on) applications the requirements are the Station Camp-on (SCMP) package 121 and the International Supplementary Features (SUPP) package 131.

Copyright © 1994–2007, Nortel Networks Nortel Networks Confidential

For network Camp-on from Inquiry Call (Station Camp-on) applications the requirements are the Station Camp-on (SCMP) package 121, the International Supplementary Features (SUPP) package 131 and the Network Attendant Service (NAS) package 159 and its prerequisites.

Feature implementation

Task summary list

The following is a summary of the tasks in this section:

1. "LD 15 " (page 143)

   This overlay is modified to accept responses to STCB (Station Camp-on Busy Tone) and NSCP (Network Station Camp-on) prompts. In response to the STCB prompt, enter YES or NO to allow or deny Station Camp-on Busy Tone. In response to the NSCP prompt, enter YES or NO to allow or deny Network Station Camp-on, on a particular node.

2. **LD 21** – This overlay is modified to print the STCB and NSCP prompts and their responses when the Customer Data Block is printed. The STCB prompt and its response will be output only if the SCMP (121) package is equipped. The NSCP prompt and its response will be output only if the SCMP (121) and NAS (159) packages are equipped.

3. **LD 22** – This overlay is modified to print the SCMP package mnemonic if the Station Camp-on package (121) is equipped.

LD 15

Prompt	Response	Description
REQ:	CHG NEW	Change, or add.
TYPE:	FTR	Features and options.
...		
- STCB	(NO), YES	Station Camp-on Busy tone. Enter NO if Busy Tone is not to given to the transferring (controlling) party when the desired station is busy. Enter YES if Busy Tone is to be given to the transferring (controlling) party when the desired station is busy. The default is NO.
- NSCP	(NO) YES	Network Station Camp-on. Enter NO if sets on this node are not allowed to have calls camped-on by sets in other nodes.

Copyright © 1994–2007, Nortel Networks
Nortel Networks Confidential

Prompt	Response	Description
		Enter YES if sets on this node are allowed to have calls camped-on by sets in other nodes. The default is NO.

Feature operation

Prior to describing the operation of the Night Service Enhancements the following terms are defined in terms of these feature operations:

Night DN

The Night DN pertains to Night DNs defined on a customer basis.

According to NAS routing the Night DN defined on a node must be on the given node (local).

External Call

Any call originated by the Public Switched Telephone Network (PSTN) is said to be an external call. This includes the following cases:

- Calls originating on a Public Exchange (Central Office [CO]), Foreign Public Exchange (FEX), Direct Inward Dial (DID), or Wide-area Telephone Service (WATS) trunk and terminating on the local node, and
- Calls originating on a CO, FEX, DID, or WATS trunk on a remote node, Integrated Services Digital Network (ISDN) TIE trunks, and NAS routed Public Switched Telephone Network (PSTN) or ISDN TIE trunks which are handled at the NAS node.

Non ISDN TIE trunks (local and remote) are said to be private trunks and are not treated as carrying external calls, although we may have a PSTN call involved at the originating node.

This definition includes both the standalone and network cases.

Requeuing of Attendant Presented Calls

Prior to the introduction of the Requeuing of Attendant Presented Calls, when a call had been presented to an attendant console it remained presented on the console, even if the Position Busy key was pressed.

The Requeuing of Attendant Presented Calls capability changes the system operation such that, if the Position Busy key is pressed on the console when an unanswered call has been presented to it the call will be returned to the attendant queue as if an AFNA time out had occurred.

Copyright © 1994–2007, Nortel Networks
Nortel Networks Confidential

This capability will not apply if the call is an interposition attendant (attendant to attendant) call. In this case, the call will remain on the console until answered.

In cases where the console is the last active console of the customer and there is an active AOP, if the call involves a ringing party on the destination side, the ringing will be disconnected. Similarly if the call is a Call Waiting recall, the Call Waiting will be canceled. This ensures that the required call will be presented on the AOP, irrespective of normal call type restrictions.

Note that all consoles will enter the Position Busy state if the Night Service key is pressed on any one of a customer's attendant consoles. In this case, all consoles must be checked for presented, but unanswered calls which must be cleared from the console and requeued.

Call Handling in Night Service

Calls already Queued when Night Service is Entered

Standalone case

Any external call which is queued, waiting to be serviced by an attendant console, when a customer goes into Night Service will continue to be queued until it can be presented to the appropriate Night DN.

Network case

As NAS takes precedence over NSE, if NAS routing is involved, the call will be presented to a remote attendant, or remote Night DN, or local Night DN, according to the NAS configuration.

If NAS routing is not involved, the call will be presented to local Night DN.

External Calls already Queued when Night Service is Entered

Operation Prior to Night Service Enhancements

The treatment of queued external calls was as follows:

- Dial "0" calls from DIDs or incoming CO calls remained queued for the Night DN.
- Call Forward Busy calls remained queued for the Night DN.
- Call Forward No Answer calls were not queued for a busy Night DN. If a call could not be presented immediately it was removed from the queue and the originating party was given Busy Tone.
- Attendant Recalls (ARC) and transfers to the attendant DN were removed from the attendant queue. The consultation call was "canceled", if the held call was an external party it was reconnected to the transferring (controlling) party.

Copyright © 1994–2007, Nortel Networks
Nortel Networks Confidential

- All intercepts involving an external party were queued for the Night DN.
- Timed reminder recalls remained queued, but were not presented to the Night DN.

Operation with Night Service Enhancements

The NSE capabilities change the operation such that Call Forward No Answer calls, ARCs, and transfers to the attendant will remain queued for the Night DN. In addition to these call types, timed reminder recalls will also be presented to the appropriate night DN.

Timed reminder recalls treatment is the following:

- Ringing stops for slow answer recalls when the recall occurs.
- Call Waiting is canceled when the recall occurs.
- Camp-on is canceled when the recall occurs.

Internal Calls already Queued when Night Service is Entered

Operation Prior to Night Service Enhancements

Any internal call that was already queued for the attendant was not queued for the Night DN.

When a customer went into Night Service, if the Night DN was idle, the first call was presented to the Night DN. Any internal calls not presented in this way were given busy tone and removed from the queue.

Operation with Night Service Enhancements

Standalone case

With NSE the operation is changed such that all internal calls which should be presented to the Night DN will remain queued until the customer Night DN becomes available.

Network case

If the call was extended by the attendant over DPNSS1 or MCDN with NAS active, and the call is camped-on or call waiting at the remote node, the call will remain queued at the local node waiting for an answer at the remote node.

Copyright © 1994–2007, Nortel Networks
Nortel Networks Confidential

Timed Reminder Time Outs during Night Service

When a timed reminder time out occurs during Night Service, depending on the call type, the call may be presented to the Night DN or continue waiting for the called party to answer. External (PSTN originated) calls will be presented to the Night DN or, if the Night DN is busy will wait in the queue until the Night DN becomes available.

In the case of a timed reminder Camp-on recall, the Camp-on is canceled when the recall occurs (time out).

In case of a slow answer recall, the desired set will be disconnected when the recall occurs (time out).

In case of a timed reminder Call Waiting recall, the Call Waiting will be canceled when the recall occurs (time out).

According to NAS routing these calls may be presented to a remote attendant or a remote Night DN. When the NAS routing starts, the destination (desired party) is released and the call is presented or queued to the appropriate terminal (that is, remote attendant or local Night DN or remote Night DN).

External calls that recall will be presented to, or queued for, the Night DN.

Internal calls that recall will be dropped when NAS routing is involved and the Night DN is at a remote node, because when NAS routing takes place internal call recalls are not queued for the Night DN. The station to which the call is being transferred (that is, the station on which the call is ringing, Call Waiting or camped-on) does not have to be located on the same node as the transferring (controlling) station.

If the attendant on the same node as the Night DN comes back to Day Service, timed recalls queued for the Night DN will be presented to the attendant as recalls.

Camp-on from Inquiry Call (Station Camp-on)

Standalone case

Any station, not necessarily the Night DN, attempting to transfer an external call, may, during the associated inquiry call, camp the trunk on to a busy station.

The camp-on will take affect from the moment the transferring station has completed the transfer to the desired DN.

Copyright © 1994–2007, Nortel Networks
Nortel Networks Confidential

The transferring station will hear Ringback Tone or Busy Tone depending on the option entered in response to the STCB prompt in the Customer Data Block (LD 15). This prompt applies to any set, not just the Night DN. By default (STCB is set to NO), the transferring party will hear Ringback Tone.

The desired station will hear Camp-on tone if it has WTA Class of Service assigned. Otherwise, if it has WTD Class of Service, the Camp-on will take effect without the desired party being informed a call is camped-on.

When the transfer is completed, the external party is camped-on to the desired station and receives either ringback tone or an announcement.

Network case

Any station, not necessarily the Night DN, attempting to transfer an external call across an ISDN network may, during the associated inquiry call, Camp-on the trunk on to a busy station.

The location of the transferring party has no effect on the Station Camp-on capability.

The Camp-on will take Affect from the moment the transferring station has completed the transfer to the desired DN.

The transferring station will hear ringback tone or busy tone depending on the option entered in response to the STCB prompt in the Customer Data Block (LD 15). This prompt applies to any set, not just the Night DN. By default (STCB is set to NO), the transferring party will hear ringback tone. The tone given, either ringback tone or busy tone, is determined by the node in which the desired (Camped-on to) party resides.

The desired station will hear Camp-on tone if it has WTA Class of Service assigned. If it has WTD Class of Service, the Camp-on will take affect without the desired party being informed a call is camped-on.

When the transfer is completed, the external party is camped-on to the desired station and receives either ringback tone or an announcement.

Recall Timing on Camp-on Calls

When any station extends an external call, recall timing will be initiated if the call is camped-on to a busy station.

The recall timing will start from the moment that the extending station "releases" the call. The value of the recall timer is set by the prompt RTIM in the Customer Data Block (LD 15).

Copyright © 1994–2007, Nortel Networks Nortel Networks Confidential

At the recall, the Camped-on call will be routed to the attendant. If the attendant is in Night Service, night treatment is given, and if NAS routing is active, the call will be routed according to the NAS configuration.

Standalone case

When the recall to the attendant occurs, the Camp-on is canceled. If the attendant is busy during the recall, the recall will be queued.

Network case

When the recall occurs and the attendant has answered the recall, the call will still be camped-on to the desired party. If during the recall the attendant is busy, the recall will be queued.

Copyright © 1994–2007, Nortel Networks
Nortel Networks Confidential

Copyright © 1994–2007, Nortel Networks
Nortel Networks Confidential

Night Service, Enhanced

Contents

This section contains information on the following topics:

"Feature description" (page 151)

"Operating parameters" (page 152)

"Feature interactions" (page 153)

"Feature packaging" (page 154)

"Feature implementation" (page 154)

"Feature operation" (page 155)

Feature description

This feature modifies the existing Night Service operation by allowing Public Network (Central Office [CO], Direct Inward Dialing [DID], Foreign Exchange [FEX], and Wide Area Telephone Service [WATS]) trunks to be assigned to specific Directory Numbers (DN) during Night Service.

With this feature each customer will be able to assign Public Network trunks to one of nine Night Groups. Each Night Group will allow the customer to define up to nine Night DNs. During Night Service, incoming calls will be routed to one of the Night DNs defined for the group. The actual DN the call will be routed to is determined by the Night Service Option number selected at that time.

The customer will also be able to define whether Night Call Waiting tone will be given to Night stations. With Night Call Waiting tone allowed, busy Night stations are notified when an incoming call is terminating on them. The incoming call will be queued on the Night station until it becomes idle. When the Night station becomes idle, the incoming call will be presented.

Copyright © 1994–2007, Nortel Networks
Nortel Networks Confidential

This enhancement allows incoming DID trunks to be queued against busy Night stations, thereby making their operation the same as all other Public Network trunks.

Normal Night Service

With the feature active, the existing Night Service feature is enhanced by providing a night (NITE) prompt for DID trunks. Night numbers for DID trunks can be defined in their respective trunk blocks against the prompt. Attendants will be able to change their night numbers by specifying their corresponding access codes and member numbers using the existing Night Service feature.

Group Night Service

The customer is allowed to assign individual Public Network trunks to one of nine Night Group numbers (1 to 9). Each Night Group has up to nine Night Directory Numbers associated with it. During Night Service, incoming calls on a trunk will be routed to one of the Directory Numbers associated with that trunk. The actual number called is determined by a Night Service Option number corresponding to the Night Group number programmed by the attendant during Day service.

When an incoming call is routed to a busy directory number, an optional Night Call Waiting tone may be applied to that number to notify the user that a call is waiting. The call on the trunk will be queued until the night directory number becomes free.

Operating parameters

The same feature requirements apply as for Night Service.

Enhanced Night Service does not apply to auto-terminate trunks.

Enhanced Night Service is permanently activated if the system has no attendant and the ENS option is set to "YES." In this case, the Night Service Option number can only be programmed in the Customer Data Block (LD 15).

Enhanced Night Service uses one Speed Call list as the Night Number Table.

The operation of the optional Night Call Waiting Tone is the same as Call Waiting Tone.

Night Service Option 0 and Night Service Group 0 are reserved for the customer Night number and should not be programmed in LD 18.

Copyright © 1994–2007, Nortel Networks Nortel Networks Confidential

Feature interactions

AC15 Recall: Timed Reminder Recall

The Night Service Enhancements feature is used to direct the call to the Night DN if the original call is an external call and the SUPP package 131 is equipped. When there is an AC15 recall and the attendant is in Night Service, the called party is disconnected (the AC15 trunk is released) and the original call is presented to the Night DN.

Call Waiting (CWT)

This feature will terminate incoming Night calls to busy Night DNs by applying Call Waiting. This will still be done even if the Night DN is an analog (500/2500-type) telephone with Call Waiting Denied (CWD) Class of Service, or if the Night DN is a Meridian 1 proprietary telephone without a Call Waiting (CWT) key assigned.

All telephones — both analog (500/2500-type) telephones and Meridian 1 proprietary telephones — will be given Night Call Waiting tone, if the NWT prompt in LD 15 was responded to with "YES," regardless of the Warning Tone (WTA/WTD) Class of Service setting of the telephone. Meridian 1 proprietary telephones will be given Night Call Waiting tone in the handset, instead of the speaker buzz given for Call Waiting.

Direct Inward System Access (DISA)

It is not possible to assign a Night Service Group Number to any trunk that is a member of a route that is set to auto-terminate on a DISA DN.

Multi-Party Operations

During Night Service, mishandled calls are routed to the night DN. External calls, other than DID calls, are queued until answered. TIE calls are disconnected if the night DN is busy.

Multi-Tenant service

Any restrictions that exist in the system preventing individual Tenant access to certain routes will not be checked when the Night Number Table is programmed. It will be up to the technician to ensure all such restrictions are taken into consideration.

The tenant to route restrictions will be enforced when an attempt is made to terminate an incoming call on a Night DN via the Night Number Table. If the termination to the Night DN is not allowed, Overflow tone (Fast Busy) will be given to the incoming trunk.

Trunk Barring (Telephones)

Any incoming trunk call that is routed by Enhanced Night Service to a telephone from which it is barred will not be connected. Overflow tone (Fast Busy) will be given to the incoming trunk instead.

Copyright © 1994–2007, Nortel Networks
Nortel Networks Confidential

Trunk to Trunk Barring

Any incoming trunk call that is routed to an outgoing Public Network trunk will be barred if Enhanced Night Service is active. Overflow tone (Fast Busy) will be given to the incoming trunk instead. This restriction is in addition to the configured Trunk Barring for the system.

Warning Tone

All telephones — both analog (500/2500-type) telephones and Meridian 1 proprietary telephones — will be given Night Call Waiting tone, if the NWT prompt in LD 15 was responded to with "YES," regardless of the Warning Tone (WTA/WTD) Class of Service setting of the telephone.

Feature packaging

Enhanced Night Service (ENS) is packaged as package 133.

Feature implementation

Task summary list

The following is a summary of the tasks in this section:

1. "LD 18" (page 154)

   Configure Night Number Table.

2. "LD 15" (page 155)

   Configure Enhanced Night Service.

3. "LD 14" (page 155)

   Configure Enhanced Night Service for trunks.

LD 18

Prompt	Response	Description
REQ	NEW CHG	Add, or change.
TYPE	SCL	Speed Call List number
LSNO	xxx	List number. Enter list number; this number will be entered in response to the NNT prompt in LD 15 (Customer Data Block).
DNSZ	xx	Enter maximum excepted length required.

Copyright © 1994–2007, Nortel Networks
Nortel Networks Confidential

Prompt	Response	Description
SIZE	100	Enter 100 to ensure that definitions for Options 1-9 and Groups 1-9 may be input.
STOR	xy z...z	Define Night Number Table entry, where: x is the Night Service Option number (1-9) y is the Night Service Group number (1-9), and z...z is the DN to which calls will be routed. This must be a valid station DN within the system. Network Access Codes are not allowed. Night Service Option 0 and Night Service Group 0 are reserved for the customer Night number and should not be programmed, (that is, 00, 01, 02, 03, 04, 05, 06, 07, 08, 09, 10, 20, 30, 40, 50, 60, 70, 80, and 90).

LD 15

Prompt	Response	Description
REQ:	NEW CHG	Add, or change.
TYPE:	CDB	Customer data block.
...		
ENS	(NO) YES	(Disable) enable Enhanced Night Service.
- NWT	(NO) YES	(Disable) enable Night Call Waiting tone.
- NNT	0-253	Enter the Speed Call List (LSNO) number of the Night Number Table defined in LD 18.
- NSO	0-9	Night Service Option number.

LD 14

Prompt	Response	Description
REQ	NEW CHG	Add, or change.
TYPE	DID	Direct Inward Dial.
...		
NGRP	(0)-9	Night Service Group number.

Feature operation

Night number assignment from Night Number Table

A Speed Call List (SCL) is specified in the Customer Data Block (CDB), LD 15, for the purpose of storing night DNs against each Night Service Group and Option.

Copyright © 1994–2007, Nortel Networks
Nortel Networks Confidential

The designated SCL consists of 100 two-digit translations. The first digit represents the Night Service Option number, while the second digit represents the Night Service Group number. Night Service Option zero (0) and Group zero (0) are reserved for the customer Night number, and therefore should not be defined, (that is, 00, 01, 02, 03, 04, 05, 06, 07, 08, 09, 10, 20, 30, 40, 50, 60, 70, 80, and 90). The following is a sample Night Number Table with an explanation of how calls are terminated:

Table 1
Example of a Night Number Table

Option	Group	Number
.	.	
.	.	
.	.	
2	5	4311
2	6	4011
2	7	3893
.	.	
.	.	
3	5	3400
3	6	4321
3	7	4780
.	.	
.	.	

Night stations 4311, 4011, 3893 are assigned to Night Service Option 2 for Night Service Groups 5, 6, and 7 respectively.

If Night Service Option 2 is active, night calls from trunks designated in LD 14 as Night Service Group 5 will be routed to 4311, night calls from trunks designated in LD 14 as Night Service Group 6 will be routed to 4011, and night calls from trunks designated in LD 14 as Night Service Group 7 will be routed to 3893.

If the attendant selects Night Service Option 3, night calls from trunks designated in LD 14 as Night Service Group 5 will be routed to 3400, night calls from trunks designated in LD 14 as Night Service Group 6 will be routed to 4321, and night calls from trunks designated in LD 14 as Night Service Group 7 will be routed to 4780.

Copyright © 1994–2007, Nortel Networks
Nortel Networks Confidential

Attendant console

This section describes the sequences to be followed by the attendant to select and query the Night Service Option and to activate Enhanced Night Service.

Step	Action	Response
1	Press Shift key	
2	Press Loop key	Indicator is activated.
3	Press Night key	Indicator flashes.
		Dial tone is received.
		Current Night Service Option number is displayed.
4a	QUERY ONLY	
	Press RLS key	Indicator next to Loop and Night keys deactivates.
		Display is cleared.
or		
4b	SELECT	
i	Dial a one-digit (0-9) option number.	Dial tone is removed.
		Old Night Service Option number (X) is shifted, new Option number (Y) is displayed, and X and Y are separated by a hyphen, (for example, Y-X).
ii	Press RLS key	Indicator next to Night and Position Busy keys deactivates.
		Night Service Option is stored.
		Display is cleared.
5	ACTIVATE Enhanced Night Service	
	Press Night key or Position Busy key if you are last active Attendant.	Indicators next to Night and Position Busy keys are activated. Current (active) Night Service Option number is displayed.

Copyright © 1994–2007, Nortel Networks
Nortel Networks Confidential

Copyright © 1994–2007, Nortel Networks
Nortel Networks Confidential

No Hold Conference

Contents

This section contains information on the following topics:

"Feature description" (page 159)

"Operating parameters" (page 161)

"Feature interactions" (page 161)

"Feature packaging" (page 163)

"Feature implementation" (page 163)

"Feature operation" (page 165)

Feature description

Combined with Conference, Speed Call, System Speed Call, Autodial, and Hot Line, No Hold Conference (NHC) allows you to establish a Conference call without placing the current caller on hold.

This feature is available in four forms, merging No Hold Conference (NHC) with Autodial, Speed Call, and Hot Line into a single key. The new combined keys are the Conference-Autodial (CA), Conference-Speed Call (CS), and Conference-Hot Line (CH) feature keys. A No Hold Conference (NHC) key can also be configured, acting as a simple Conference key.

Conference-Hot Line can be used in the following two ways:

- The Direct CH option has the number stored with the key.
- The List CH option has a pointer that selects an entry from a Hot Line list.

When a telephone is connected to another party, you can originate a Conference-Autodial (CA), Conference-Speed Call (CS), or Conference-Hot Line (CH) call by pressing the CA, CS, CH, or NHC key. The system determines the destination as if it were a regular Autodial, Speed Call, or Hot Line call. The parties are conferenced in without holding. For example,

Copyright © 1994–2007, Nortel Networks
Nortel Networks Confidential

a call comes in to the customer notifying the customer of a fire. The user wishes to notify the fire department of the emergency without placing the original caller on hold, and the number is stored on the Conference-Autodial key. By pressing the CA key, the customer establishes a Conference call. The fire department is notified and the original connection is maintained.

When you press the feature key, one of the following occurs:

- If the destination is an idle internal Directory Number (DN), that DN rings and the CA, CS, CH, or NHC lamp flashes (60 ipm). You hear no ringback tone.
- If the destination is a trunk with answer supervision, the trunk is seized and the key lamp flashes. The voice path is not established until an answer signal is received.
- When the destination is a trunk without answer supervision, the trunk is seized, the voice path is established, and the key lamp flashes. All tone signals provided by the far end (for example, ringback) are heard by all parties involved in the Conference call. Calls on trunks without answer supervision are treated as answered after digit outpulsing is completed.
- When the intended destination is a busy internal DN, trunk, or route, the key lamp fast flashes (120 ipm). Press the active call key to cancel the attempt. The active call key is the key on which the call is established. It can be any key on which a regular Conference call can be made, including the DN key, Call Waiting, and Automatic Call Distribution (ACD) Incalls keys.
- In the case of network blocking, or if a conference port is unavailable, the key lamp fast flashes. Press the active call key to cancel the attempt.
- When the destination is an invalid entry (for example, a vacant number, or an illegal list entry) the key lamp fast flashes. Press the active call key to cancel the attempt.

Pressing the active call key at any time before the called party responds cancels the attempt, returning the telephone to the state prior to pressing the CA, CS, CH, or NHC key.

If the call is answered, the key lamp goes off, and the called party is added to the existing conversation. By pressing the active call key, the last added party is released. These operations can be repeated as often as necessary, according to your network configuration, to add new parties to an existing conversation.

If the CA or CS keys are pressed at any time other than during a Conference call, they operate as a regular Autodial or Speed Call. The CH key operates as a regular Hot Line key only when the terminating key is HOT. Pressing the NHC key allows the user to dial the number desired for the Conference call.

Copyright © 1994–2007, Nortel Networks Nortel Networks Confidential

Operating parameters

Assignable keys are limited to the number of keys available on your telephone.

NHC is available on Meridian 1 proprietary telephones with the CA, CS, CH, and NHC keys. It is not available on the analog (500/2500-type) telephones or attendant consoles.

The Release (RLS) key has no effect while the key lamps are flashing or fast flashing. Other than during these stages, it can be used to abort the Conference call.

The CA key, like the regular Autodial key, is programmable from the telephone.

The CS and CH keys must have the Speed Call and Hot Line numbers assigned in LD 18.

Data calls are not supported.

All four keys can coexist with each other as well as with other Conference, Autodial, Speed Call, and Hot Line features.

Feature interactions

500/2500 Line Disconnect

If one of the parties in the conference is connected to a 500/2500 port that is in turn connected to a Voice Response Unit (VRU), dial tone is provided to the 500/2500 port when all the other parties in the conference disconnect. This feature enhancement applies in the same way to Call Transfer and Hunting.

Automatic Redial

When an Automatic Redial (ARDL) call is not accepted by the calling party, the No Hold Conference (NHC) key is ignored.

Automatic Hold

The Conference-Hot Line (CH) key does not support Automatic Hold.

Call Page Network Wide

A station set or attendant console that no hold conferences an external Call Page Network Wide (PAGENET) uncontrolled call is not blocked. However, an external PAGENET controlled call is blocked.

Centralized Attendant Services

Centralized Attendant Service (CAS) attendants are not supported.

Copyright © 1994–2007, Nortel Networks
Nortel Networks Confidential

Conference - Six Party

This feature can be enabled at any time that a regular Conference-6 feature can be activated.

Display of Calling Party Denied

Display information on sets involved in a No Hold Conference call is based on the individual Class of Service of each set.

Hot Line

The CH key supports only one-way Hot Line calls.

IVR

IVR calls cannot be No Hold conferenced.

Make Set Busy

The CH key overrides Make Set Busy only when the terminating key is HOT.

Meridian 911

In a Meridian 911 environmental, No Hold Conference calls are treated as internal calls and are linked to the low priority queue of the ACD DN.

Meridian 911 Call Abandon

M911 abandoned calls cannot be No Hold conferenced.

Music Trunk

A Music (MUS) Trunk cannot be No Hold conferenced.

Recorded Announcement Trunk

A Recorded Announcement (RAN) Trunk cannot be No Hold conferenced.

Off-Hook Alarm Security

Off-Hook Alarm Security treatment occurs when a telephone with ASCA Class of Service attempts an NHC call and the ASTM expires. The OHAS DN is conferenced in with the other conferees.

Paging Trunk

A Paging (PAG) Trunk cannot be No Hold conferenced.

System Speed Call list

Whenever the CS key is programmed for a System Speed Call list, all calls made with that key are System Speed Calls.

Copyright © 1994–2007, Nortel Networks
Nortel Networks Confidential

Feature packaging

No Hold Conference capability is available when the following features are equipped:

- Autodial (ADL) for CA key configuration
- Speed Call User (SCU) if the CS key is configured
- Enhanced Hot Line (HOT) package 70 for the CH key, and
- System Speed Call (SSC) package 34 to configure CS or CH keys.

Feature implementation

Task summary list

The following is a summary of the tasks in this section:

1. "LD 18 " (page 163)

   Provision Speed Call or Hot Line numbers for CS and CH keys.

2. "LD 11" (page 164)

   Add or change No Hold Conference for Meridian 1 proprietary telephones.

LD 18

Prompt	Response	Description
REQ:	NEW CHG	Add, or change a Speed Call list.
TYPE:	SCL SSC HTL	Speed Call, System Speed Call, Hot Line.
CUST	xx	Customer number, as defined in LD 15
LNSO	0-8190	Speed Call list number.
NCOS	(0)-99	NCOS (when TYPE = SSC or HTL).

The WRT prompt follows the SIZE and STOR prompts asking you to confirm the correctness of the data just entered. If data is correct, enter YES or <CR>. A response of NO after the SIZE prompt causes all data entered to be ignored. A response of NO after the STOR prompt generates a warning message (SCH3213) indicating that the data was not stored and must be reentered.

A response of (*) aborts the program. Only the last STOR value is lost. All previous values to which WRT was YES are saved.

The following information is displayed with the WRT prompt, following SIZE: ADDS: MEM: xxxxx DISK: yy.y

Where xxxxx is the amount of protected memory and yy.y is the number of disk records required for the new speed call list. Check the MEM AVAIL and DISK REC AVAIL values displayed before the REQ prompt.

Copyright © 1994–2007, Nortel Networks
Nortel Networks Confidential

Prompt	Response	Description
DNSZ	xx	Maximum number of digits in a list entry, where: xx = 4, 8, 12, (16), 20, 24, 28, or 31.
SIZE	1-1000	Maximum number of entries in the Speed Call list.
WRT	(YES) NO	Data is correct and list can be updated.
STOR	xxx	xxx = list entry number (0-9, 00-99, or 000-999).
	yy...yy	yy = digits to be stored against the entry (must be equal to or less than DNSZ).
WRT	NO (YES)	Data is correct and list can be updated.

The WRT prompt follows the SIZE and STOR prompts asking you to confirm the correctness of the data just entered. If data is correct, enter YES or <CR>. A response of NO after the SIZE prompt causes all data entered to be ignored. A response of NO after the STOR prompt generates a warning message (SCH3213) indicating that the data was not stored and must be reentered.

A response of (*) aborts the program. Only the last STOR value is lost. All previous values to which WRT was YES are saved.

The following information is displayed with the WRT prompt, following SIZE: ADDS: MEM: xxxxx DISK: yy.y

Where xxxxx is the amount of protected memory and yy.y is the number of disk records required for the new speed call list. Check the MEM AVAIL and DISK REC AVAIL values displayed before the REQ prompt.

LD 11

Prompt	Response	Description
REQ:	CHG	Change.
TYPE:	a...a	Telephone type. Type **?** for a list of possible responses.
TN		Terminal number
	l s c u	Format for Large System and CS 1000E system, where l = loop, s = shelf, c = card, u = unit.
	c u	Format for Small System and Media Gateway 1000B where c = card and u = unit.
KEY	xx CA 4-(16)-23 y...y	Combined NHC and Autodial key, where: xx = key number, and y...y = target number stored in the key (maximum 23 digits).

Copyright © 1994–2007, Nortel Networks Nortel Networks Confidential

Prompt	Response	Description
	xx CH D yy z...z	Combined NHC and Direct Hot Line key, where: xx = key number yy = number of digits in the target number, and z...z = target number stored within the key.
	xx CH L 0-999	Combined NHC and Hot Line key, where: xx = key number, and 0-999 = Hot Line list entry.
	xx CS yyy	Combined NHC and Speed Call key, where: xx = key number, and yyy = Speed Call list number.
	xx NHC	NHC key, where: xx = key number.

Feature operation

No Hold Conference (NHC)

To establish an NHC call using the NHC key:

Step	Action
1	Establish a call.
2	Press **NHC**. The indicator goes on steadily.
3	Dial the number for the conference. The indicator flashes until the call is answered.
4	The conference is complete.

—End—

Conference-Autodial (CA)

To store an Autodial number:

Step	Action
1	Press **CA** (Conference-Autodial). The CA indicator flashes.
2	Enter the number.
3	Press **CA**. The indicator goes off.

—End—

Copyright © 1994–2007, Nortel Networks
Nortel Networks Confidential

To use Conference-Autodial:

Step	Action
1	Establish a call.
2	Press **CA**. The indicator flashes until the call is answered.
3	The conference is complete.

—End—

Conference-Hot Line (CH)

To establish an NHC call using the CH key:

Step	Action
1	Establish a call.
2	Press **CH** (Conference-Hot Line). The indicator flashes until the call is answered.
3	The conference is complete.

—End—

Conference-Speed Call (CS)

To establish an NHC call using the CS key:

Step	Action
1	Establish a call.
2	Press **CS** (Conference-Speed Call). The indicator goes on steadily.
3	Enter the Speed Call list entry number for the conference number. The indicator flashes until the call is answered.
4	The conference is complete. To disconnect the last NHC conference caller in any of the above procedures, press the DN key once.

—End—

Copyright © 1994–2007, Nortel Networks
Nortel Networks Confidential

North American Numbering Plan

Contents

This section contains information on the following topics:

"Feature description" (page 167)

"Operating parameters" (page 169)

"Feature interactions" (page 169)

"Feature packaging" (page 169)

"Feature implementation" (page 169)

"Feature operation" (page 172)

Feature description

The North American Numbering Plan (NANP), established in 1947 and currently administered by Bellcore, governs the telephone numbering system throughout Bermuda, Canada, the Caribbean, and the United States.

Two components of the NANP are Interchangeable Numbering Plan Areas (INPAs) and Carrier Access Codes (CACs). NPAs are the three-digit prefixes commonly known as area codes. CACs permit telephone users to access any interexchange carrier or operator service provider. CACs must be supported by any entity, such as a hotel, motel, hospital, university, airport, gas station, or pay telephone owner, that makes telephone services available to the public.

Interchangeable Numbering Plan Area

The Interchangeable NPA codes plan was developed in the 1960s to manage the inevitable depletion of available codes. Prior to 1995, all area codes had an N(0/1)X format, where N was any digit from 2 to 9 inclusive and X was any digit, 0 to 9. As of January 1995, area codes have an NXX format, increasing the available codes to 640.

Copyright © 1994–2007, Nortel Networks
Nortel Networks Confidential

Modifications to system software, including changes to LDs that accept NPA or Home NPA codes, have eliminated dependencies and limitations associated with the old NPA code format.

The introduction of Interchangeable NPAs means that an area code (NPA) can appear identical to a Central Office prefix or a private network Location Code (LOC).

It is important to avoid conflicts among NPAs, Central Office prefixes, and LOCs. It is recommended that customers implement 1+ dialing to eliminate ambiguity.

The remainder of this section discusses the procedure that Basic Alternate Route Selection (BARS)/Network Alternate Route Selection (NARS) customers need to follow to handle the NPA changes. Although Alternate Route Selection (ARS) and Direct Trunk Access customers need not modify their databases, those who use Call Detail Recording and/or Toll Denied Class of Service should consider the effect of NPA changes on their operations.

BARS/NARS

BARS/NARS prohibits the entry of identical NPAs, Central Office prefixes, or LOCs. Typically, customers construct translation tables with NPA and LOC codes associated with one Access Code and Central Office codes associated with a second Access Code. Now that LOC and NPA codes may be identical, this option no longer guarantees that codes will not conflict.

Table 2 "Access Codes and 1+ dialing" (page 168) summarizes the options.

Table 2
Access Codes and 1+ dialing

# of Access Codes	Need LOC?	Use 1+?	Results
2	yes	yes	no conflicts
2	yes	no	may need to check that no LOC is identical to any NPA (depends on access code arrangement)
2	no	yes	no conflict
1	no	yes	no conflict
1	no	no	not recommended
1	yes	yes	not recommended

Copyright © 1994–2007, Nortel Networks
Nortel Networks Confidential

The ideal dialing plan continues to use two Access Codes, with 1+ dialing for NPA calls. (Digit Manipulation can remove the "1" for customers whose Central Office does not support 1+ dialing.)

Customers with two Access Codes that do not want to use 1+ dialing must ensure that no LOCS in the database are identical to existing NPAs. The database needs to be checked whenever a new NPA is introduced.

Customers who do not need LOCs can use a single Access Code and 1+ dialing or two Access Codes, one for NPA and one for the Central Office code.

Direct Trunk Access and Alternate Route Selection

Direct Trunk Access and Alternate Route Selection customers need not update software to support interchangeable NPAs. Customers using Direct Trunk Access should continue to monitor local dialing procedures to ensure correct toll call recognition.

System upgrades

Upgrade requirements can include hardware and software. For specific information, consult *Communication Server 1000M and Meridian 1: Large System Upgrade Procedures* (NN43021-458).

Operating parameters

There are no operating parameters associated with this feature.

Feature interactions

Autodial, Speed Call, Hot Line

Customers may need to modify the lists and tables associated with these features to accommodate the new prefixes or to reflect changes to numbers resulting from implementation of 1+ dialing.

Feature packaging

Equal Access compliance is included in base system software. The Network Class of Service package (NCOS) package 32 is required to configure Equal Access.

Feature implementation

Task summary list

The following is a summary of the tasks in this section:

1. "LD 15" (page 170)

   Change the Home Numbering Plan Area Code at the HNPA prompt.

2. "LD 16" (page 170)

Copyright © 1994–2007, Nortel Networks Nortel Networks Confidential

Enter the NPA code definition for the M911 feature.

3. "LD 19" (page 170)

   Enter the NPA for incoming Feature Group D ANI screening.

4. "LD 87" (page 171)

   Define the Free Call Area Screening.

5. "LD 90" (page 171)

   Build the NPA and HNPA translation tables.

For complete information on implementation and configuration, see the Equal Access Compliance feature description in this document.

The following prompts have been modified to accept NPA input in the new interchangeable format.

LD 15

Prompt	Response	Description
REQ:	CHG	Change.
TYPE:	NET	ISDN and ESN Networking options.
...		
- ISDN	YES	Change ISDN options.
- HNPA	200-999 1200-1999	Home Numbering Plan Area code.

LD 16

Prompt	Response	Description
...		
TYPE	NPID	Numbering Plan Digit/Information Digit table.
IDTB	0-7	NPID table number.
NPID	0-9	NPID to be translated.
TRMT	NPA	NPID treatment.
NPA	200-999	Numbering Plan Area code.

LD 19

Prompt	Response	Description
...		
TYPE	ANI	Feature Group D data block.

Copyright © 1994–2007, Nortel Networks
Nortel Networks Confidential

Prompt	Response	Description
ANIT	(OVF) RAN xxx DN xxx NCOS xxx	Invalid Automatic Number Identification (ANI) treatment.
NPA	200-999	Three ANI digits in NPA format (prompt accepts only three digits even if 1+ dialing is in effect).

LD 87

Prompt	Response	Description
...		
FCI	xxx	Free Call Area Screening table index number.
NPA	200-999 200-999 200-999	Area code or extended NPA code translation (only three digits accepted even if 1+ dialing is in effect).

LD 90

Prompt	Response	Description
...		
TRAN	AC1, AC2, SUM	Access code 1, 2, or summary tables.
NPA	200-999 200-999 200-999 200-1999 200-1999 1200-1999	Area code or extended NPA code translation.
HNPA	200-999 1200-1999	Home Numbering Plan Area code.

Carrier Access Codes

A Carrier Access Code (CAC) gives a caller access to any interexchange carrier or Operator Service Provider (OSP). FCC regulations require that Call Aggregators, such as hotels, motels, hospitals, universities, airports, gas stations, and pay telephone owners, provide selective access to the public. Callers dial the CAC to reach their desired carrier or OSP before dialing the telephone number.

Aggregators are permitted to block calls selectively, although they must allow callers access to any long distance caller. Selective equal access lets aggregators choose to block direct-dialed calls that result in charges to the originating telephone. Aggregators cannot block operator-assisted calls.

The CAC has included a "10" identifying prefix followed by a three-digit Carrier Identification Code (CIC) for a total of five digits. FCC regulations, require that the CAC expand to seven digits: a "101" identifying prefix followed by a four-digit CIC.

Copyright © 1994–2007, Nortel Networks
Nortel Networks Confidential

Feature operation

System software allows the following operator-assisted North American and international dialing sequences:

- CAC + 0
- CAC + 0 + (NPA) + NXX + XXXX
- CAC + 01 + CC + NN

System software allows or denies these direct-dialed calls:

- CAC + 1 + (NPA) + NXX + XXXX
- CAC + 011 + CC + NN

where

CAC = Carrier Access Code (10XXX or 101XXXX)
NPA = Numbering Plan Area (area code)
NXX = Central Office code format
(N = any digit except 0 or 1; X = any digit 0–9)
XXXX = any four digits
CC = Country Code, and
NN = National number.

Copyright © 1994–2007, Nortel Networks
Nortel Networks Confidential

Off-Hook Alarm Security

Contents

This section contains information on the following topics:

"Feature description" (page 173)

"Operating parameters" (page 176)

"Feature interactions" (page 176)

"Feature packaging" (page 178)

"Feature implementation" (page 178)

" Feature operation" (page 179)

Feature description

Off-Hook Alarm Security (OHAS) allows locked out calls to be intercepted to a customer-defined Directory Number (DN) other than an attendant (for example, a security DN). OHAS treatment is determined on a telephone basis by assigning a Class of Service called Alarm Security Allowed (ASCA). By enhancing line lockout, telephones with Alarm Security Allowed (ASCA) Class of Service are intercepted to customer-defined Directory Numbers (DNs) when the dial tone/interdigit timer expires or the telephone is Forced Out of Service (FSVC). Telephones without ASCA continue to use the existing line lockout treatment; see the Line Lockout module in this document.

An Off-Hook Alarm Security (OHAS) DN can be a Single Appearance Directory Number (DN), a Multiple Appearance DN, or an Automatic Call Distribution (ACD) DN. The OHAS DN cannot be an attendant DN, Listed DN, SPRE, Virtual ACD Agent, or Trunk Access Code.

If the ASCA Class of Service is assigned, but the telephone is not associated to an OHAS DN, an error message appears on the maintenance TTY when the system tries to redirect the call.

Copyright © 1994–2007, Nortel Networks
Nortel Networks Confidential

The Alarm Security Timer (ASTM) provides dial tone and interdigit timing for telephones with ASCA Class of Service. The ASTM does not apply to telephones being Forced Out of Service (FSVC).

Dial tone and interdigit timeout - call treatment

A telephone associated with an OHAS DN that receives a dial tone or interdigit timeout intercepts to the OHAS DN specified by the telephone's Off-Hook Interdigit OHAS number (OHID).

Forced Out of Service (FSVC) - call treatment

A digital telephone is considered FSVC when the line is cut, damaged, or unplugged.

The FSVC OHAS treatment applies only to digital telephones. A telephone associated with an OHAS DN that is FSVC intercepts to the OHAS DN specified by the telephone's FSVC number.

Multiple OHAS DNs

The two methods for handling multiple OHAS DNs are zone and event dependent, and are described in the following sections.

Multiple OHAS DNs - zone dependent

OHAS allows for multiple OHAS DNs within a single customer group, enabling the customer to create multiple zones.

For example, a hospital with several locations can define separate OHAS DNs for each location and define each distinct location as a zone. In Figure 2 "Zone dependent example" (page 175), the hospital has four zones. A separate OHAS DN is defined for each of the four zones. Zone 0 uses OHAS DN 0, Zone 1 uses OHAS DN 1, and so on. Each telephone in Zone 0 defines the OHID and FSVC numbers to 0; each telephone in Zone 1 defines the OHID and FSVC numbers to 1, and so on.

Copyright © 1994–2007, Nortel Networks
Nortel Networks Confidential

Figure 2
Zone dependent example

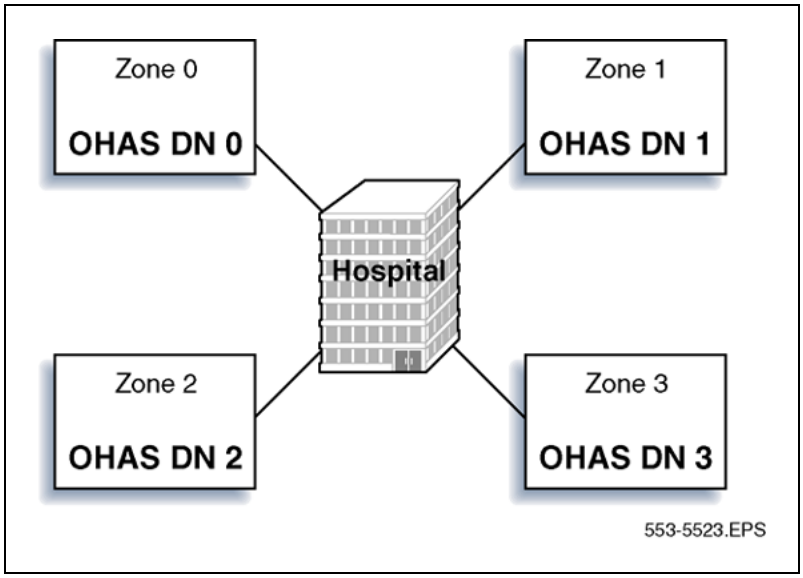

Multiple OHAS DNs - event dependent

OHAS can distinguish between OHID timeout and FSVC events by having a single telephone with separate OHAS DNs for OHID timeout and FSVC events (for example, a telephone can be defined with a FSVC number 1 and OHID number 2. If a dial tone/interdigit timeout occurs, the telephone intercepts to OHAS DN 2. If the same telephone is FSVC, OHAS DN 1 is notified).

Figure 3
Event dependent example

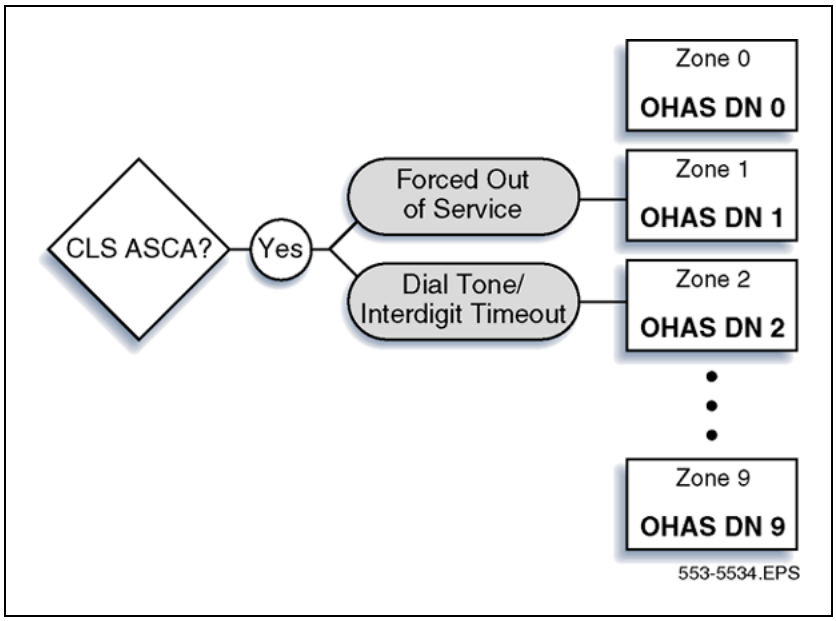

Copyright © 1994–2007, Nortel Networks
Nortel Networks Confidential

OHAS TTY display

Every time an OHAS intercept treatment takes place, a message is sent to all maintenance TTYs. This message contains an OHAS message indicator, the originating DN and TN, and a time stamp.

Format			
OHASxxxx	<dn>	l s c u	time stamp
Output example			
OHAS0000	5003	1 0 1 0	04:30:21
The two possible OHAS messages are: OHAS0000OHAS treatment due to dial tone/interdigit timeout, and OHAS0001OHAS treatment due to Forced Out of Service call treatment.			

Operating parameters

OHAS is not supported for attendants or networks.

OHAS intercept treatment for FSVC telephones is provided only for the M2317 and Meridian Modular telephones.

The Alarm Security Timer (ASTM) does not apply to telephones being FSVC.

The timing for recognizing a FSVC condition depends on the type of card that the system is using:

- The Integrated Services Digital Line Cards (ISDLCs) take approximately six seconds to recognize an FSVC condition.
- Peripheral Controller cards take approximately one second to recognize an FSCV condition.

Once a trunk is seized, OHAS treatment does not apply.

Feature interactions

Call Redirection

Call Redirection features defined for telephones with ASCA Class of Service work as currently defined in the system. The Call Redirection features include the following:

- Call Forward All Calls
- Call Forward No Answer
- Call Forward Busy
- Call Forward by Call Type
- Call Pickup, and
- Hunting.

Copyright © 1994–2007, Nortel Networks Nortel Networks Confidential

Call Transfer

A telephone receives the OHAS treatment if the telephone has ASCA Class of Service and attempts to transfer a call and the ASTM expires.

China - Flexible Feature Codes - Busy Number Redial, Enhanced Flexible Feature Codes

Busy Number Redial cannot be used on a set with Off-Hook Alarm Security Allowed, because ADL cannot be configured on these sets.

Conference

The OHAS line lockout treatment occurs when a telephone associated with an OHAS DN initiates a Conference call and the ASTM expires. Only the Conference initiator receives the OHAS treatment; other conferees remain in Conference. If the initiator of the Conference call presses the Conference key, the OHAS DN is conferenced in with the other conferees.

Electronic Switched Network, Trunk Access Codes

If an Electronic Switched Network or Trunk Access Code is dialed, the dial tone/interdigit timer is stopped and the telephone will not recall to the designated OHAS DN after the specified time period has elapsed.

Last Number Redial, Stored Number Redial

OHAS treatment may apply to these features if the ASTM expires.

Line Lockout

OHAS treatment occurs when a telephone with ASCA Class of Service receives an interdigit or dial tone timeout. The ASTM is used instead of the dial tone and interdigit timers (DIDT and DIND, respectively) normally used for LLT and DLT line lockout treatment.

Multi-Party Operations

Three-party Service (TSA) and Alarm Security Allowed (ASCA) Classes of Service are mutually exclusive. A set assigned TSA Class of Service cannot also be assigned ASCA Class of Service, and vice versa; a set assigned ASCA Class of Service cannot also be assigned TSA Class of Service.

The Off-Hook Alarm Security feature is mutually exclusive with Multi-Party Operations.

No Hold Conference

OHAS treatment occurs when a telephone with ASCA Class of Service attempts an No Hold Conference call and the ASTM expires. The OHAS DN is conferenced in with the other conferees.

Copyright © 1994–2007, Nortel Networks
Nortel Networks Confidential

Room Status

OHAS takes precedence over the off-hook detection method of the Room Status feature. If a telephone is defined with the Alarm Security Allowed (ASCA) Class of Service, the off-hook detection method does not work.

Speed Call, Speed Call, System

OHAS treatment may apply to these features if the ASTM expires. The Alarm Security Timer may expire for the following reasons:

- A dial tone or interdigit timeout occurs while dialing the speed call access code.
- The Speed Call being accessed has an asterisk (*) causing a three-second delay. If the ASTM is three seconds or less, the OHAS intercept treatment may occur.

Feature packaging

This feature is included in base system software.

Feature implementation

Task summary list

The following is a summary of the tasks in this section:

1. "LD 15" (page 178)

   Define the Off-Hook Alarm Security (OHAS) Directory Numbers (DNs).

   OHAS DNs must have ASCA Class of Service assigned in LD 10 or LD 11.

2. " LD 10" (page 179)

   Assign Alarm Security Allowed (ASCA) Class of Service.

3. " LD 11" (page 179)

   Assign Alarm Security Allowed (ASCA) Class of Service.

LD 15

Prompt	Response	Description
REQ:	NEW CHG	Add or change a customer.
TYPE:	INT	Intercept Treatment options.
CUST		Customer number
	0-99	Range for Large System and CS 1000E system.
	0-31	Range for Small System and Media Gateway 1000B.
- LLT	(OVF) ATN OFA	Flexible line lockout treatment.
...		

Copyright © 1994–2007, Nortel Networks
Nortel Networks Confidential

Prompt	Response	Description
TYPE	OAS	Off Hook Alarm Security Options.
The following prompts occur when OAS_DATA is entered:		
- ODN0	xxx...x	OHAS DN 0.
- ODN1	xxx...x	OHAS DN 1.
- ODN2	xxx...x	OHAS DN 2.
- ODN3	xxx...x	OHAS DN 3.
- ODN4	xxx...x	OHAS DN 4.
- ODN5	xxx...x	OHAS DN 5.
- ODN6	xxx...x	OHAS DN 6.
- ODN7	xxx...x	OHAS DN 7.
- ODN8	xxx...x	OHAS DN 8.
- ODN9	xxx...x	OHAS DN 9.
- ASTM	1-(30)-63	The timer applies to all OHAS DNs and is programmable in one-second increments.

LD 10

Prompt	Response	Description
REQ:	NEW CHG	Add, or change.
TYPE:	500	Telephone type.
CLS	(ASCD) ASCA	Alarm Security (denied) allowed. When ASCA is assigned, the OHAS DN must be defined in LD 15.
OHID	(0)-9	Off-Hook Interdigit OHAS number.

LD 11

Prompt	Response	Description
REQ:	NEW CHG	Add or change.
TYPE:	a...a	Telephone type. Type **?** for a list of possible responses.
CLS	(ASCD) ASCA	Alarm Security (denied) allowed. When ASCA is assigned, the OHAS DN must be defined in LD 15.
OHID	(0)-9	Off-Hook Interdigit OHAS number.
FSVC	(0)-9	FSVC OHAS DN number. The FSVC prompt is given only to digital telephones.

Feature operation

No specific operating procedures are required to use this feature.

Copyright © 1994–2007, Nortel Networks
Nortel Networks Confidential

Copyright © 1994–2007, Nortel Networks
Nortel Networks Confidential

Off-Hook Alarm Security Half Disconnect Enhancement

Contents

This section contains information on the following topics:

"Feature description" (page 181)

"Operating parameters" (page 184)

"Feature interactions" (page 185)

"Feature packaging" (page 186)

"Feature implementation" (page 186)

" Feature operation" (page 188)

Feature description

The Off-Hook Alarm Security Half Disconnect Enhancement (OHAS HD) feature, enhances the functionality of the existing Off-Hook Alarm Security (OHAS) feature. The existing Off-Hook Alarm Security (OHAS) feature allows a user to indicate an emergency by going off hook. The security DN programmed for the off-hook telephone rings after the dial tone/interdigit timer expires.

Where two telephones share one TN, the need for an enhancement addressing the Half Disconnect condition arose. The scenario is as follows. A user initiates a call on telephone 1 and then continues the call on telephone 2, in a different location. When the user completes the call, but only hangs up telephone 2, (telephone 1 remains off hook) the line (Party A) remains in the Half Disconnect/Line Lockout state until the user remembers to put telephone 1 on hook. (See Figure 4 "OHAS HD Scenario" (page 182).)

Copyright © 1994–2007, Nortel Networks
Nortel Networks Confidential

Figure 4
OHAS HD Scenario

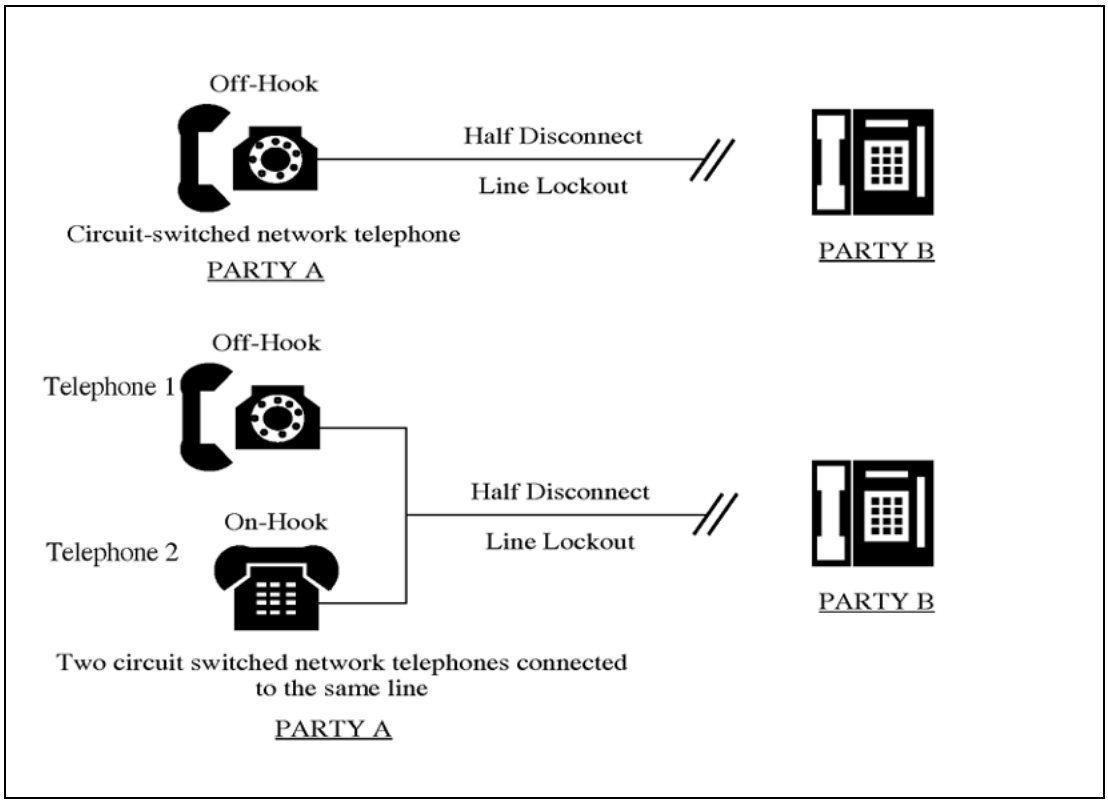

When the OHAS HD feature is enabled you can define, on a customer basis, the length of time before the OHAS HD treatment is given. When this timer expires the programmed security DN rings. If a telephone goes on-hook before the OHAS Half Disconnect Timer (HDTM) expires, the OHAS Half Disconnect treatment is canceled, as the telephone has completed its disconnect.

The OHAS Half Disconnect Option, (HDOPT) determines the number of OHAS Half Disconnect treatments that can be given to telephones that remain in the Half Disconnect state. This is programmed on a customer group basis.

There are three OHAS HD options for Half Disconnected telephones with OHAS enabled.

1. **HDOPT = 0** is the existing treatment without the OHAS Half Disconnect Enhancement. It is the default option and disables the Off-Hook Alarm Security Half Disconnect feature. Line Lockout treatment occurs after the normal Half Disconnect timer expires and Half Disconnect state is recognized.
2. **HDOPT = 1-10** indicates the maximum number of OHAS HD treatments given to the half disconnected analog (500/2500) type telephone. This

Copyright © 1994–2007, Nortel Networks
Nortel Networks Confidential

option allows a limited number of OHAS HD treatments. If the telephone remains off-hook in the half-disconnect state after the maximum number of treatments has expired, Line Lockout occurs when the security DN disconnects after the last OHAS Half Disconnect treatment.

3. **HDOPT = CONT** provides a continuous application of the OHAS HD treatment, while the analog telephone remains in the half disconnected state. This option continues to call the security DN every time the HDTM expires until the analog (500/2500) type telephone goes on-hook.

Class of Service

To enable the OHAS HD feature the telephone must have CLS = Alarm Security Allowed (ASCA). Therefore when the HDTM timer expires, instead of giving the Line Lockout treatment, the OHAS HD treatment is given.

OHAS security DN

On a telephone basis an HDID is assigned. The HDID is the OHAS HD Index number. The values are 0 - 9. The Index number refers to the ten OHAS DNs you can program in the Customer Data Block. For example, if a telephone has HDID 1 assigned, OHAS HD treatment calls the security DN programmed for OHAS DN 1 (ODN1), in the Customer Data Block.

The OHAS HD Index can be configured to send calls to the same security DN as the existing OHAS Off-Hook Index (OHID) or a different security DN. This flexibility allows you to distinguish between regular OHAS dial tone/interdigit time-out treatment calls (emergency situations) and OHAS HD treatments for half disconnect calls.

OHAS Half Disconnect Timer

With the OHAS Half Disconnect Enhancement feature enabled, the administrator can define the length of time before the OHAS HD treatment is given. The OHAS HD timer (HDTM) gives the average user enough time to complete the disconnect of the previous call by placing all the analog telephones on-hook. The length of the OHAS Half Disconnect timer can be defined from 1 to 600 seconds (10 minutes). The timer is programmable in one second increments. The HDTM starts after the half disconnect state is detected. The default for the HDTM is 30 seconds.

OHAS TTY record display

As with the existing OHAS feature, a message also prints out on the TTY terminal indicating the telephone which is receiving OHAS treatment. The message is the same for regular OHAS and OHAS Half Disconnect.

Each occurrence of an OHAS HD intercept treatment results in a message printout on the service change TTY or the active TTY. The content and the format of the OHAS HD message is the same as the regular OHAS off-hook or interdigit time-out message.

Copyright © 1994–2007, Nortel Networks
Nortel Networks Confidential

The following is an example of the record content:

```
OHAS000 2010 1 0 1 3 5:04:04  7/09/1998
```

The definitions of the fields are as follows:

OHAS000 = OHAS message indicator

2010 = DN (the DN of the analog (500/2500) type telephone receiving OHAS or OHAS Half Disconnect treatment)

1 0 1 3 = l s c u (the TN of the analog (500/2500) type telephone receiving OHAS or OHAS Half Disconnect Treatment)

The TN for Small Systems is only two digits (c u).

5:04:04 = time stamp (when the OHAS or OHAS Half Disconnect Treatment is given)

7/09/1998 = date stamp

Operating parameters

While an analog (500/2500-type) telephone is in the half disconnect/Line Lockout state, the OHAS feature for emergencies cannot be triggered. OHAS will not work until the off-hook 500/2500 telephone goes on hook to disconnect the previous connection.

When OHAS Half Disconnect occurs, new calls cannot be initiated from the half-disconnected telephones.

If Party A goes on-hook at any time, the OHAS Half Disconnect treatment is canceled, because the disconnect is completed.

The OHAS Half Disconnect Timer is separate from the existing OHAS timer.

Digital telephones do not go into the half disconnect state. Digital telephones cannot share a TN with other telephones.

The feature does not apply to digital telephones because the half disconnect state does not apply to them.

The OHAS HD treatment is not provided for attendant consoles.

Copyright © 1994–2007, Nortel Networks
Nortel Networks Confidential

If the telephone remains off-hook in the half-disconnect state after the maximum number of OHAS HD treatments has expired, Line lockout occurs when the security DN disconnects after the last OHAS Half Disconnect treatment.

OHAS HD calls can be directed to a separate security DN to enable the user who answers the calls to distinguish between an Off Hook Alarm Security call and an Off Hook Alarm Security Half Disconnect Call.

Ringback tone can be heard at the off-hook analog telephone when the security DN is ringing. Anyone who uses one of the half-disconnected analog (500/2500-type) telephones can speak to the person who answers the security DN.

If Party A goes on-hook at any time, the OHAS Half Disconnect treatment is canceled, because the disconnect is completed.

If the connection is a trunk call and the far end does not disconnect completely, Party A will not go into the half disconnect state. The system treats Party B and Party A as if they are still on an active call.

The OHAS HD feature applies only to a single switch. It is not supported in a networking environment.

The OHAS HD security DN cannot be an Attendant DN.

The operation of the OHAS HD timer is impacted on systems with high traffic.

Feature interactions

Call Redirection

Call Redirection features defined for OHAS Half Disconnect security DN work as currently defined in the system. Call Redirection features include:

- Call Forward All Calls
- Call Forward No Answer
- Call Forward Busy
- Call Forward by Call Type
- Call Pickup
- Hunting

Copyright © 1994–2007, Nortel Networks
Nortel Networks Confidential

Conference

If an analog 500/2500 telephone user with the ASCA Class of Service is in a conference and all the other parties disconnect from the call while the user's telephone remains off hook, the OHAS Half Disconnect Enhancement feature applies to the half-disconnected telephone.

Line Lockout

If an analog telephone has the ASCA Class of Service, and it is in the half disconnected state, the OHAS HD treatment occurs if the customer-based OHAS Half disconnect option (HDOPT) is enabled. Choose HDOPT 1-10 or HDOPT = CONT. If HDOPT= 0 is selected, Line Lockout will occur.

If the telephone stays in the half disconnected state and the number of the OHAS HD treatments given to the telephone exceeds the maximum defined number, Line Lockout is given to the telephone after the last OHAS Half Disconnect treatment is given.

No Hold conference

The OHAS HD treatment works the same for a conference call initiated using No Hold Conference as for Conference.

Feature packaging

This feature is included in base system software.

Feature implementation

Task summary list

The following is a summary of the tasks in this section:

1. "LD 15 " (page 186)

   Configure Off-Hook Alarm Security (OHAS) Directory Numbers (DNs), Half Disconnect treatment option, and the OHAS Half Disconnect timer.

2. " LD 10 " (page 187)

   Assign an ASCA Class of Service to the telephone. Associate the telephone with one of the ten Off-Hook Alarm Security Directory Numbers (ODN0-9) configured in LD 15.

The telephone is also programmed with an OHID, related to the OHAS feature.

LD 15

Prompt	Response	Description
REQ:	CHG	Change existing data.
TYPE:	OAS	Off-Hook Alarm Security (OHAS) options.

Copyright © 1994–2007, Nortel Networks
Nortel Networks Confidential

Prompt	Response	Description
CUST		Customer number
	0-99	Range for Large System and CS 1000E system.
	0-31	Range for Small System and Media Gateway 1000B.
ODN0	xxxx	OHAS DN 0.
...		
ODN9	xxxx	OHAS DN 9.
ASTM	1 - (30) - 63	OHAS off-hook or interdigit timeout timer in seconds.
HDOPT		OHAS Half Disconnect treatment options:
	(0) 1-10 CONT	No OHAS HD treatment given. Maximum number of OHAS HD treatments. Continuous OHAS HD treatments.
HDTM	1- (30) - 600	OHAS Half Disconnect timer in seconds (in increments of 1 second).

LD 10

Prompt	Response	Description
REQ:	NEW CHG	Add new data. Change existing data.
TYPE:	500	500/2500 telephones.
TN		Terminal number
	l s c u	Format for Large Systems where l = loop, s = shelf, c = card, u = unit.
	c u	Format for Small System and Media Gateway 1000B where c = card and u = unit.
CUST	xx	Customer number, as defined in LD 15
DES	d..d	Office Data Administration System Station Designator.
. . .	. . .	
DN	x...x	Directory Number.
....		
CLS	ASCA	Alarm Security Allowed. (ASCD) = Alarm Security Denied is the default.
...		
OHID	(0) - 9	OHAS ID index to OHAS security DN.
HDID	(0) - 9	OHAS Half Disconnect Index to OHAS HD security DN.

Copyright © 1994–2007, Nortel Networks
Nortel Networks Confidential

Feature operation

No specific operating procedures are required to use this feature.

Copyright © 1994–2007, Nortel Networks
Nortel Networks Confidential

Off-Premises Extension

Contents

This section contains information on the following topics:

"Feature description" (page 189)

" Operating parameters" (page 189)

"Feature interactions" (page 189)

" Feature packaging" (page 189)

" Feature implementation" (page 190)

" Feature operation" (page 190)

Feature description

The Off-Premises Extension (OPX) feature allows a single-line telephone serving as an extension to be located away from the customer premises. The loop limit is 1400 ohms to the station or equivalent long-line circuit interface. Distance varies depending on the gauge of wire used.

See *Circuit Card: Description and Installation* (NN43001-311) for additional information.

Operating parameters

The Off-Premises Extension (OPX) feature applies only to single line telephones. A QPC192 line circuit pack must be equipped.

Feature interactions

See *Circuit Card: Description and Installation* (NN43001-311) for additional information.

Feature packaging

This feature is included in base system software.

Copyright © 1994–2007, Nortel Networks
Nortel Networks Confidential

Feature implementation

LD 10 - Add or change Off-Premises Extension Class of Service for analog (500/2500-type) telephones.

Prompt	Response	Description
REQ:	CHG	Change.
TYPE:	500	Telephone type.
TN		Terminal number
	l s c u	Format for Large System and CS 1000E system, where l = loop, s = shelf, c = card, u = unit.
	c u	Format for Small System and Media Gateway 1000B where c = card and u = unit.
CLS	(ONP) OPX	Telephone is an on-premises or off-premises extension.

Feature operation

There are no specific procedures required to operate this feature.

Copyright © 1994–2007, Nortel Networks
Nortel Networks Confidential

Off-Premises Station Analog Line Card

Contents

This section contains information on the following topics:

" Feature description" (page 191)

" Operating parameters" (page 192)

" Feature interactions" (page 193)

" Feature packaging" (page 193)

" Feature implementation" (page 193)

" Feature operation" (page 198)

Feature description

The Eight-port Off-Premises Station (XOPS) analog line card (NT1R20) is specific to North America and China as part of the Global Line Card program.

The XOPS card supports the current portfolio of peripheral equipment, and is designed for use in Off-premises Station (OPS) environments, connected through a Central Office (CO)/Public Exchange. It is also suited for campus system environments. Each of the units on the card can be configured to be operated as an OPS extension or in an On-premises (ONS) configuration.

The XOPS card requires a set of downloadable parameters for Termination and Balance Impedance values. These parameters are downloaded to the card whenever it is initialized or enabled. In addition, the analog cards require the loss/levels to be set for each unit on the card using the B34 Flexible Level message interface. ONS units receive loss/levels statically on Initialize or Enable.

Copyright © 1994–2007, Nortel Networks
Nortel Networks Confidential

Operating parameters

The XOPS card requires a Main Distribution Frame (MDF) wiring installation plan similar to trunks, rather than other line cards. Therefore, it will not be possible to interchange the XOPS card with another line card without rewiring the connections, or adjusting the Terminal Numbers (TNs) using service change.

The Classes of Service have been renamed to be consistent with industry standard terminology as follows: OPX is now called OPS; and ONP is now called ONS.

The jumper settings must be set in accordance with OPS and ONS Classes of Service.

The XOPS hardware will support Answer Supervision through Battery Reversal or Flash Hook.

No software support is provided for any Loopback from Extended Network Card (XNET) or XPEC to the XOPS line card.

The new XOPS line card uses B34 CODEC and Enhanced Extended Universal Trunk Card (EXUT) trunk circuitry. Therefore, the downloadable Termination Impedance (TIMP)/Balance Impedance (BIMP) combination parameter set, as defined for IPE EXUT, is likewise defined for the XOPS. The usage of TIMP/BIMP implies a limited number of downloadable combinations.

The XOPS is designed to work in North America using dynamic pad switching based on OPS and ONS Classes of Service. The card functions in a Static Loss Plan Download environment, but only the static levels associated with Analog Line Unit Short (ALUS) and Analog Line Unit Long (ALUL) are supported. In these situations, only Class of Service Long Line (LOL) or Short Line (SHL) has any meaning; OPS/ONS Class of Service of the unit is ignored.

As with the existing design, parameter download is not performed as part of enabling a Superloop, but is done as part of an initialization, or enabling of a unit, card, or peripheral shelf.

Hardware is compatible with the SL-100 circuit switched network, but software support for the SL-100 is not included as part of the XOPS feature.

Copyright © 1994–2007, Nortel Networks Nortel Networks Confidential

Feature interactions

Due to the Loss Planning requirements for the XOPS card, the Global Line Card feature interacts with other Loss Planning features. The XOPS card must be able to operate in system environments that are using North American Transmission Plan, Static Loss Plan Download (SLPD), or Dynamic Loss Switching (DLS).

Feature packaging

Meridian 1 Superloop (XPE) package 203 is required, because the XOPS card can only operate in an IPE environment.

Feature implementation

Task summary list

The following is a summary of the tasks in this section:

1. " LD 10" (page 194)

   At the TN prompt configure an XOPS card as a Double Density card on a Superloop.

2. " LD 10 " (page 194)

   The commands for creating or modifying an analog (500/2500-type) telephone type logical card block are modified to support the new card density for the XOPS card.

3. " LD 10 " (page 195)

   Use the Easy Change option to change only the BIMP and/or TIMP value, or the card density.

4. " LD 10 " (page 195)

   Additional checking is added to support MOV commands on XOPS units.

5. " LD 10 " (page 196)

   Additional checks are added to support CPY (copy) commands involving XOPS units.

6. " LD 25" (page 196)

   Move card TNs from Superloop to Superloop.

7. " LD 25" (page 197)

   Move card TNs from non-Superloop to Superloop.

8. " LD 97" (page 197)

   Install or customize Static Loss Plan Download table.

9. " LD 97" (page 198)

Copyright © 1994–2007, Nortel Networks
Nortel Networks Confidential

Install or customize a Dynamic Loss Switching Alternate Levels table.

LD 10" LD 10" (page 194)

Prompt	Response	Description
REQ:	NEW CHG	New, or change.
TYPE:	500 500M	Analog (500/2500-type) telephone data block. For Large Systems For Small Systems
TN		Terminal number
	l s c u	Format for Large System and CS 1000E system, where l = loop, s = shelf, c = card, u = unit.
	c u	Format for Small System and Media Gateway 1000B where c = card and u = unit.
CDEN	SD DD 4D	Single, Double, or Quad Density.
DES	dddddd	1-6 alphanumeric character Office Data Administration System (ODAS) Station Designator.
...		
CLS	(OPS) (ONS) (LOL) (SHL)	Classes of Service ONS and OPS are supported. OPS is the default if the TN is on XOPS, otherwise ONS is the default. Classes of Service LOL and SHL are supported, but are not used for North America Loss Plan handling. LOL is the default if the TN is XOPS, otherwise SHL is the default.
...		
TIMP	(600) 900	Termination Impedance for XOPS unit. Prompted only if the specified TN is to be configured on an XOPS card (Double Density card on a Superloop).
BIMP	(3CM2) (600) 3COM 900	Balance Impedance for XOPS unit. 3CM2 is the default if the CLS is OPS, otherwise the default is 600.

LD 10

Prompt	Response	Description
REQ:	NEW CHG	New, or change.
TYPE:	CARDSLT	Card block for single line terminations.
TN		Terminal number
	l s c u	Format for Large System and CS 1000E system, where l = loop, s = shelf, c = card, u = unit.

Copyright © 1994–2007, Nortel Networks
Nortel Networks Confidential

Prompt	Response	Description
	c u	Format for Small System and Media Gateway 1000B where c = card and u = unit.
CDEN	SD DD 4D	Single, double, or quad density.

LD 10

Prompt	Response	Description
REQ:	CHG	Change.
TYPE:	500	Analog (500/2500-type) telephone data block.
TN		Terminal number
	l s c u	Format for Large System and CS 1000E system, where l = loop, s = shelf, c = card, u = unit.
	c u	Format for Small System and Media Gateway 1000B where c = card and u = unit.
ECHG	(NO) YES	(Deny) allow the Easy Change option.
ITEM	TIMP ttt, BIMP bbbb CDEN cc CLS sss sss	Prompted only if the response to ECHG is yes. New ITEM responses TIMP or BIMP have been added, with the associated responses for each item (ECHG of TIMP and BIMP are only allowable for a Double Density card on a Superloop (XOPS)). TIMP: ttt is 600 or 900. BIMP is prompted next. BIMP: bbbb is 3CM2, 600, 900 or 3COM (BIMP should be set to 600 if the unit is configured with ONS Class of Service). ITEM is prompted next. CDEN cc is SD, DD or 4D (ECHG of CDEN continues to be supported, but existing code ensures that a single density card with at least one unit with Class of Service OPS cannot be changed to any other density. If CLS is changed to OPS, ONS, LOL, or SHL, TIMP is prompted next. Otherwise ITEM is prompted next.
TIMP	tttt	Prompted only if the response to ITEM was CLS of OPS, ONS, LOL, or SHL, and if CLS was changed from its previous setting. tttt is 600 or 900.
BIMP	bbbb	Prompted only if the response to ITEM is TIMP ttt or on change of CLS sss (bbbb is 3CM2, 600, 900, or 3COM).
ITEM	<CR>	Used to exit the ITEM prompt loop.

LD 10

Prompt	Response	Description
REQ:	MOV	Move.
TYPE:	500	Analog (500/2500-type) telephone data block.
TN		Terminal number

Copyright © 1994–2007, Nortel Networks
Nortel Networks Confidential

Prompt	Response	Description
	l s c u	Format for Large System and CS 1000E system, where l = loop, s = shelf, c = card, u = unit.
	c u	Format for Small System and Media Gateway 1000B where c = card and u = unit.
TOTN		To Terminal Number
	l s c u	Format for Large System and CS 1000E system, where l = loop, s = shelf, c = card, u = unit.
	c u	Format for Small System and Media Gateway 1000B where c = card and u = unit.

LD 10

Prompt	Response	Description
REQ:	CPY xx	Copy.
TYPE:	500	Analog (500/2500-type) telephone data block.
...		
CFTN		Copy From Terminal Number, prompted if REQ = CPY
	l s c u	Format for Large System and CS 1000E system, where l = loop, s = shelf, c = card, u = unit.
	c u	Format for Small System and Media Gateway 1000B where c = card and u = unit.
SFMT	AUTO DN etc.	For AUTO and DN format types; the TNs are provided by the system.

LD 25

Prompt	Response	Description
REQ	MOV	Move.
CUST	xx	Customer number, as defined in LD 15.
SRCL	0-156	Source loop.
DSTL	0-156	Destination loop.

Copyright © 1994–2007, Nortel Networks
Nortel Networks Confidential

Prompt	Response	Description
MVSG	(NO) YES	Move segment.
SCHD		If attempting to move a Quad Density or Octal Density card on a Superloop to an XOPS card, or vice versa, an SCH6400 error message will be issued.
	l s c u TO l s c u c u TO c u	For Large Systems For Small Systems

LD 25

Prompt	Response	Description
REQ	MOV	Move.
CUST	<CR>	Customer number.
SRCL	0-156	Source loop.
DSTL	0-156	Destination loop.
MVSG	(NO) YES	Move segment.
SCHD		If attempting to move a Single Density, Double Density, or Quad Density card on a Superloop to an XOPS card, an SCH6400 error message will be issued.
	l s c u TO l s c u c u TO c u	For Large Systems For Small Systems

LD 97

Prompt	Response	Description
REQ	CHG PRT	Change, or print.
TYPE	LOSP XCTP XPE SUPL XNPD SYSP	Install or change the system Loss Plan.
TTYP	STAT	Modify the system SLPD table.
NATP	YES NO	North American Transmission Plan.
STYP		Static Loss Plan Download table type, where:
	PRED CSTM DISL	PRED = Predefined table, CSTM = Customized table. DISL = Disable current active table
		If the response is PRED, TNUM is prompted. If CSTM is selected, SLPD port types are prompted after password verification. If response DISL is selected, SLPD will be disabled after password verification. If <CR> is entered, the table type is not changed (previously <CR> was treated as PRED).
TNUM	nn	SLDP Table number. nn is 1 to 25 Prompted if PRED is selected (REQ is prompted next).

Copyright © 1994–2007, Nortel Networks
Nortel Networks Confidential

Prompt	Response	Description
PWD2	pppp ppp...p	Prompted only if STYP is CSTM and LAPW is restricted or the user logged in with the PWD1 password.
COTS	Rx Tx	CO trunk with SHL CLS.

LD 97

Prompt	Response	Description
REQ	CHG PRT	Change, or print.
TYPE	LOSP XCTP XPE SUPL XNPD SYSP	Install or change the system Loss Plan.
NATP	YES NO	North American Transmission Plan.
TTYP	DYNM	Modify the system DLS Alternate Levels table.
DTYP	PRED CSTM DISL	DLS Alternate Levels table type. If the response is PRED, TNUM is prompted. If CSTM is selected, DSL port types are prompted after password verification. If the response DISL is selected, DLS will be disabled after password verification. If <CR> is entered, the table type is not changed (previously <CR> was treated as PRED).
TNUM	nn	DLS Alternate Levels table number. nn is 1 to 3. Prompted if PRED is selected (REQ is prompted next).
PWD2	ppp ppp...p	Prompted only if DTYP is CSTM and LAPW is restricted or the user logged in with the PWD1 password.
COTS	Rx Tx	CO trunk with SHL CLS.

Feature operation

No specific operating procedures are required to use this feature.

Copyright © 1994–2007, Nortel Networks
Nortel Networks Confidential

On Hold on Loudspeaker

Contents

This section contains information on the following topics:

"Feature description" (page 199)

"Operating parameters" (page 199)

"Feature interactions" (page 200)

"Feature packaging" (page 202)

"Feature implementation" (page 202)

"Feature operation" (page 204)

Feature description

The On Hold on Loudspeaker (OHOL) feature is designed for brokers (dealers), and requires proprietary hardware to make use of its functionality. This feature provides brokers with the capability to monitor stock markets, while talking to one or several customers using the handset.

At any time the user can enter the call being monitored on the loudspeaker. This can also be done for the speech monitor unit either publicly by using the built in microphone (if provided) and the conversation will be heard on the channel, or privately by taking the call on the handset. Speech monitors work as loudspeakers, but with up to eight channels.

Operating parameters

This feature requires either proprietary loudspeakers that connect to M2616 sets, or a speech monitor system, and speech monitor units to work properly.

Copyright © 1994–2007, Nortel Networks
Nortel Networks Confidential

This feature is dependent upon access to conference cards and therefore each proprietary loudspeaker/speech monitor should have a conference loop assigned. Because the conference loops are used by the entire system, an option to separate normal conference traffic from *Dealer Group Traffic* is introduced.

One conference loop per system can be assigned as a Spare Dealer Conference loop. This loop is used as a backup if the conference loop assigned to an OHOL unit is in invalid state. This loop can only be used by the OHOL feature.

Feature interactions

Attendant Barge-in, Attendant Break-in, Attendant Busy Verify, Override

It will not be possible to Break-in/Barge-in/Busy Verify/Override into a call on loudspeaker as it is effectively on hold at the set.

Audible Reminder of Held Call

This feature works with the OHOL feature as for normal calls on hold (that is, it gives a reminder there are calls on hold). Therefore, it is not recommended to use this feature with the OHOL feature.

Call Forward All Types

No type of call forward can be activated on a set with Speaker Allowed Class of Service.

Call Transfer, Conference

It will not be possible to transfer or conference the loudspeaker call to another party.

Call Waiting, Camp-on, Ring Again

These features can be applied to a busy loudspeaker DN.

Conference Loops

The configuration of conference loops has been modified to indicate whether a conference loop is a Dealer or an ordinary conference loop.

Dial Access to Group Call

If a group call is initiated from a set with Dealer Allowed (Class of Service), the conference is built up on the assigned loop of the loudspeaker or speech monitor system channel because this is a potential OHOL call.

Group Hunt

Group Hunt to a loudspeaker DN can be programmed, but will be ignored if configured as Make Set Busy (MSB) by call processing.

Copyright © 1994–2007, Nortel Networks Nortel Networks Confidential

Group Hunt

Group Hunt to a loudspeaker DN can be programmed, but will be ignored if configured as Make Set Busy (MSB) by call processing.

Held Call Clearing

Going on-hook when Held Call Clearing is activated will clear the loudspeaker as for a normal held call. Therefore, it is recommended not to use this feature with the OHOL feature.

Hold

The feature is limited to use with normal hold or automatic hold. Deluxe hold will be ignored by call processing.

Hot Line, Voice Call

It is possible to program these keys with a loudspeaker DN, but operation will be the same as for direct dial to a loudspeaker DN.

Hot Line Two Way

This feature can be used with the speech monitor system. The DN of the speech monitor system channel is configured as the DN for the HOT line key.

Hunting , Call Forward

Hunt/Call Forward to a loudspeaker DN can be programmed, but will receive intercept treatment as for direct dial to the loudspeaker DN.

Music

If Music on Hold is equipped it will not be heard by either party during a loudspeaker call.

Ring Hold LED Status

This feature reverses the lamp indication of ringing and held calls. With this feature activated, held calls will fast flash and ringing calls will slow flash.

Single Call Ringing

If a single call ringing loudspeaker DN (an analog [500/2500 type] telephone with CLS = SPKA) is dialed, intercept treatment is provided.

Telephones - Analog (500/2500-type)

The loudspeaker and speech monitor system channels are configured as analog (500/2500-type) sets with Speaker Allowed Class of Service (CLS = SPKA). These sets are in a permanent off-hook state. The units are recognized as in lockout state by the system.

Copyright © 1994–2007, Nortel Networks
Nortel Networks Confidential

Feature packaging

On Hold on Loudspeaker (OHOL) package 196 is required to operate this feature.

It is recommended to have the Autohold feature configured with this feature to simplify its operation.

Feature implementation

Task summary list

The following is a summary of the tasks in this section:

1. "LD 17 " (page 202)

   Assign Dealer Conference loop and Spare Dealer Conference loop.

2. "LD 10 " (page 203)

   A new Class of Service is added to this overlay to allow an analog (500/2500-type) telephone to be assigned as a loudspeaker DN. A new prompt, DCLP (Dealer Conference Loop), has been added to configure the assigned conference loop.

3. "LD 11" (page 203)

   Configure the M2616 set with LSPK key. Only one key can be configured per set.

4. "LD 11" (page 203)

   Configure a set with a DN key corresponding to a speech monitor system channel.

LD 17

Prompt	Response	Description
REQ	CHG	Change.
TYPE	CEQU	Common equipment parameters.
...		
- CONF	0-158	Conference loops.
	D0-D158	Conference loop number assigned as Dealer Conference loop.

Copyright © 1994–2007, Nortel Networks
Nortel Networks Confidential

Prompt	Response	Description
	S0-S158	Conference loop assigned as Spare Dealer Conference loop. It is strongly recommended that this loop is in the same group as the unit planning to use this loop to minimize the use of intergroup timeslots.
	X0-X158	To remove entry.

LD 10

Prompt	Response	Description
REQ	NEW CHG	New, or change.
TYPE	500	Analog (500/2500-type) telephone.
TN		Terminal number
	l s c u	Format for Large System and CS 1000E system, where l = loop, s = shelf, c = card, u = unit.
	c u	Format for Small System and Media Gateway 1000B where c = card and u = unit.
CLS	SPKA	Speaker allowed.
DCLP	xx	Assign loop number with or without option Dealer Conference loop.

LD 11

Prompt	Response	Description
REQ	NEW CHG	New, or change.
TYPE	M2616	Meridian Modular set.
TN		Terminal number
	l s c u	Format for Large System and CS 1000E system, where l = loop, s = shelf, c = card, u = unit.
	c u	Format for Small System and Media Gateway 1000B where c = card and u = unit.
CLS	DELA	Dealer allowed.
KEY	xx LSPK nnnnnn	Loudspeaker, where xx is the key number, and nnnnnn is the LSPK DN which is the same DN as for the OHOL unit.

LD 11

Prompt	Response	Description
REQ	NEW CHG	New, or change.
TYPE	M2616	Meridian Modular set.
TN		Terminal number

Copyright © 1994–2007, Nortel Networks
Nortel Networks Confidential

Prompt	Response	Description
	l s c u	Format for Large System and CS 1000E system, where l = loop, s = shelf, c = card, u = unit.
	c u	Format for Small System and Media Gateway 1000B where c = card and u = unit.
CLS	DELA	Dealer allowed.
KEY	xx SCR nnnnnn	xx is the key number. nnnnnn is DN which is the same DN as for the speech monitor system channel. When this DN is put on hold, the speech monitor unit will automatically be switched on.

Feature operation

Proprietary Loudspeaker System

This system consists of a M2616 set with a Loudspeaker (LSPK) key configured and an attached add-on module which has been modified to work as a loudspeaker. The proprietary loudspeaker is to be used when a user needs to be able to monitor one call on the loudspeaker at the same time as monitoring another call on the handset.

The loudspeaker is connected to a 500 line card and is in a permanent off-hook state. The DN of the loudspeaker must be Single Call Ringing (SCR).

Sets with this configuration are allowed to manually put calls onto the loudspeaker. The call to be put onto the loudspeaker has to be on hold at the set.

To activate the loudspeaker, press the LSPK key and then press any DN key on hold. The held call is put onto the loudspeaker and will be heard publicly. A user can enter into the call by using the handset on the loudspeaker (if provided). While the loudspeaker is active, any other call will be maintained on the handset. More than one call can be put on hold on the set, however only one call at a time can be switched to the loudspeaker.

To release the call from the loudspeaker, the active call on the handset has to be put on hold (either by automatic hold or manual hold) or released.

Attempts to activate a call onto the loudspeaker when busy will be ignored.

Speech Monitor System

The speech monitor system is used in an environment where several users need to listen to the same call publicly. The speech monitor system enables calls to be automatically extended to a loudspeaker. The loudspeaker in this scenario is the speech monitor unit.

Copyright © 1994–2007, Nortel Networks
Nortel Networks Confidential

The speech monitor unit has a number of speech monitor system channels (a maximum of eight) available. These channels can be switched onto the speech monitor unit and heard publicly. Each speech monitor system channel has a SCR DN configured. This SCR DN has a mixed appearance on a key (DN or HOT) on a user's set. Several users can have the same mixed DN on their set (Multiple Appearance SCR DN). The set can also have a two-way HOT line key with the same DN as a speech monitor system channel. While monitoring up to eight calls on the speech monitor unit, the users' handsets are free to maintain other calls.

The speech monitor system channels are attached to a 500 line card which is in a permanently off-hook state. The unit is recognized as in lockout state by the system.

The speech monitor system channel can be activated from DN keys or two-way HOT line keys where the DN for the HOT line is a mixed appearance with a DN of a speech monitor system channel. The user makes a call from this specific DN or HOT line key. When the call is established the user then puts the call on hold by using automatic hold or manual hold. The corresponding channel on the speech monitor system will automatically be activated. The call can then be heard on the speech monitor unit when the channel is selected. At any time the user can enter the call on the speech monitor unit by using the built-in microphone (if provided) and this two-way conversation will be heard on the loudspeaker in addition to any other channels active on the loudspeaker.

To talk privately on one of the calls being monitored on the speech monitor unit, the user takes the call on the handset of the telephone. This conversation will not be heard on the loudspeaker, but any other user with the same DN appearance will be able to enter the call by going off-hook and establishing a multiple appearance conference.

If the user presses the Release key while active on a call that appears on a speech monitor system channel, the call is disconnected from all DN appearances, including the speech monitor system channel.

It is not possible to prevent the speech monitor unit from becoming active. If a user no longer wishes to listen to the speech monitor, the unit needs to be switched off manually.

Copyright © 1994–2007, Nortel Networks
Nortel Networks Confidential

Copyright © 1994–2007, Nortel Networks
Nortel Networks Confidential

On-Hook Dialing

Contents

This section contains information on the following topics:

"Feature description" (page 207)

"Operating parameters" (page 207)

"Feature interactions" (page 207)

"Feature packaging" (page 207)

"Feature implementation" (page 208)

"Feature operation" (page 208)

Feature description

The On-Hook Dialing feature enables a Meridian 1 proprietary telephone user to make a call without lifting the handset. Signaling tones and the voice of the called party are heard over the loudspeaker. For two-way communication, the user must lift the handset or activate the Handsfree unit if equipped.

Operating parameters

The On-Hook Dialing feature does not apply to analog (500/2500-type) telephones.

Feature interactions

LOGIVOX Telephone

Because of the firmware on the LOGIVOX set, the DN key 0 is automatically selected when the first digit is dialed, and no other DN has been selected.

Feature packaging

This feature is included in base system software.

Copyright © 1994–2007, Nortel Networks
Nortel Networks Confidential

Feature implementation

There are no specific implementation procedures for this feature.

Feature operation

No specific operating procedures are required to use this feature.

Copyright © 1994–2007, Nortel Networks
Nortel Networks Confidential

Optional Outpulsing Delay

Contents

This section contains information on the following topics:

"Feature description" (page 209)

"Operating parameters" (page 209)

"Feature interactions" (page 209)

"Feature packaging" (page 210)

"Feature implementation" (page 210)

"Feature operation" (page 210)

Feature description

The Optional Outpulsing Delay (OOD) feature increases to three seconds the Start of Dialing Delay used for automated dialing on loop start Central Office (CO) trunks. This feature is required for system connection in some countries.

Operating parameters

There are no operating parameters associated with this feature.

Feature interactions

Features that automatically dial digits onto a loop start CO trunk are provided with an additional delay. These features include the following:

- Stored Number Redial
- Autodial
- Speed Call
- Call Forward All Calls

Copyright © 1994–2007, Nortel Networks
Nortel Networks Confidential

- Basic Alternate Route Selection/Network Alternate Route Selection (BARS/NARS)
- System Speed Call, System
- Network Speed Call, and
- Flexible Hot Line.

Feature packaging

This feature is included in base system software.

Feature implementation

There are no specific implementation procedures for this feature.

Feature operation

No specific operating procedures are required to use this feature.

Copyright © 1994–2007, Nortel Networks
Nortel Networks Confidential

Outgoing Hold Timer Increase

Contents

This section contains information on the following topics:

"Feature description" (page 211)

"Operating parameters" (page 214)

"Feature interactions" (page 214)

"Feature packaging" (page 214)

"Feature implementation" (page 214)

"Feature operation" (page 215)

Feature description

The increase to the Outgoing Hold Timer (OHT), included in the Operator Call Back feature (OPCB), increases the time the system holds a trunk after it receives a disconnect message from a Central Office. The OHT applies to situations where Calling Party Control is active.

Figure 5 "Example of the operation of the OHT" (page 212) shows an example of a Calling Party Control (CGPC) call, where the calling party controls the disconnect.

Copyright © 1994–2007, Nortel Networks
Nortel Networks Confidential

Figure 5
Example of the operation of the OHT

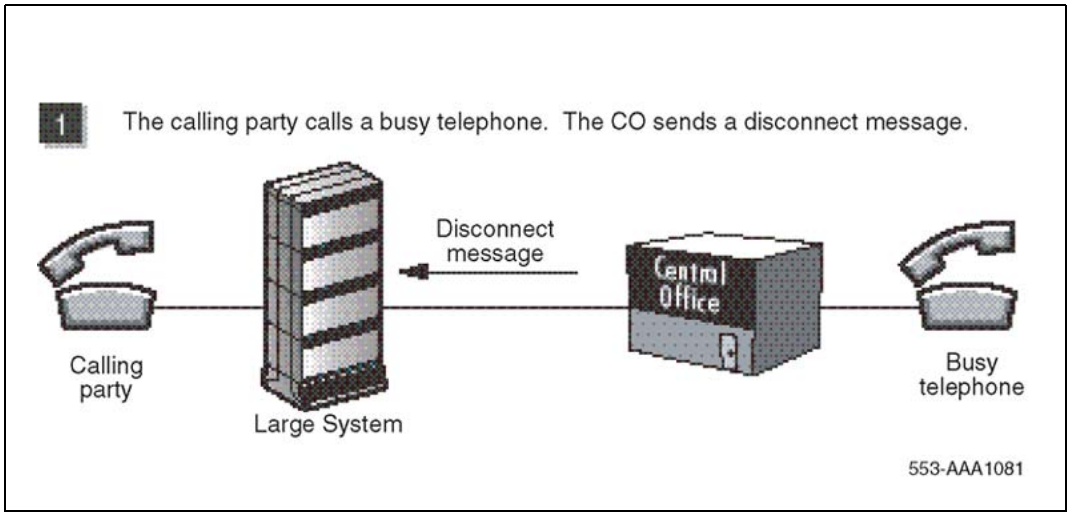

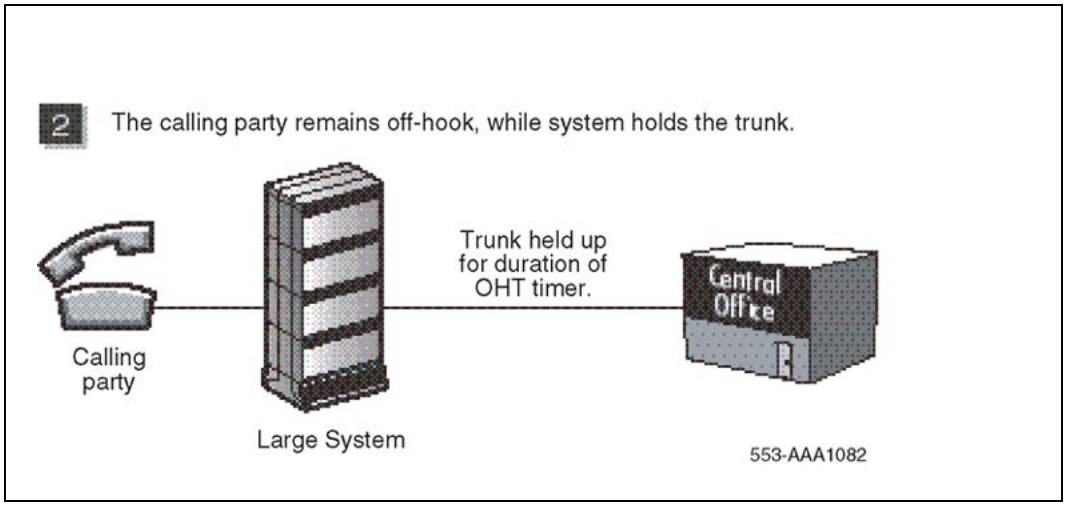

Copyright © 1994–2007, Nortel Networks
Nortel Networks Confidential

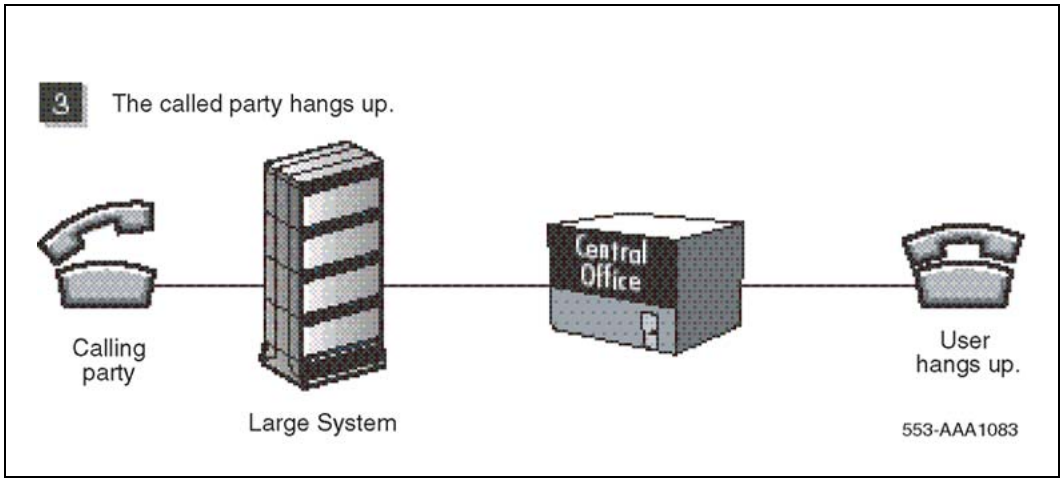

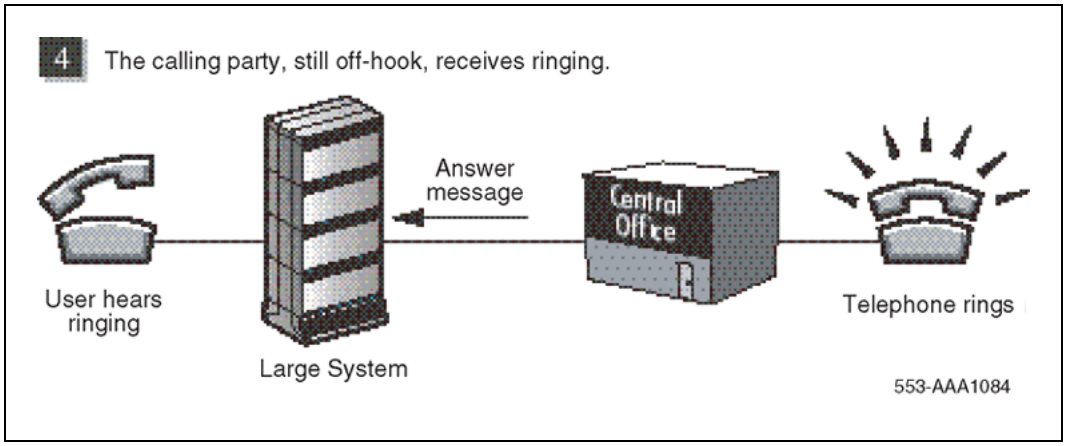

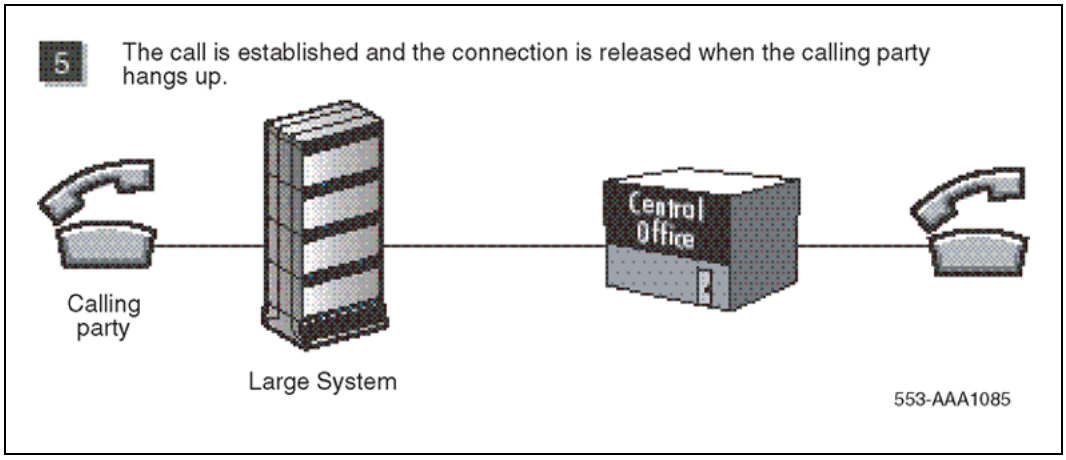

Copyright © 1994–2007, Nortel Networks
Nortel Networks Confidential

On an outgoing call, a CO can send a disconnect message back to the system during call establishment. The system does not disconnect the outgoing call until the OHT has expired. If the CO sends an answer message to the system before the timer expires, the originator is connected to the called party.

The OHT determines the length of time the system holds a trunk after receiving a disconnect message. The maximum is 126 seconds. The timer is programmed in increments of 2 seconds. The default value is 30 seconds.

Operating parameters

This feature enhances the existing OHT capability provided by Package 126.

The OPCB OHT is available on analog and DTI2 trunk interfaces. It is not supported on DTI 1.5 trunk routes.

Feature interactions

Outgoing Hold Toll Timer

When the CO sends a disconnect message on an outgoing toll call, the Outgoing Hold Toll Timer (OHTT) disconnects after a maximum of 90 seconds. The OHTT can be programmed in increments of two seconds.

Feature packaging

This feature requires Operator Call Back (OPCB) package 126.

Feature implementation

LD 16 - Configure the OHT on the trunk route, at the OHFT prompt.

Prompt	Response	Description
REQ:	CHG	Change existing data.
TYPE:	RDB	Route Data Block.
ROUT		Route number
	0-511	Range for Large System and CS 1000E system.
	0-127	Range for Small System and Media Gateway 1000B.
CNTL	YES	Changes to control or timers.
...		
OPCB	YES	Enable the Operator Call Back feature.
...		
OHT	0-(30)-126	Outgoing Hold Timer in seconds (programmed in increments of two seconds).
. . .		

Copyright © 1994–2007, Nortel Networks
Nortel Networks Confidential

Feature operation

No specific operating procedures are required to use this feature.

Copyright © 1994–2007, Nortel Networks
Nortel Networks Confidential

Copyright © 1994–2007, Nortel Networks
Nortel Networks Confidential

Out-of-Service Unit (OOSU)

Contents

This section contains information on the following topics:

"Feature description" (page 217)

"Operating parameters" (page 217)

"Feature interactions" (page 217)

"Feature packaging" (page 217)

"Feature implementation" (page 218)

"Feature operation" (page 219)

Feature description

The ability to mark a unit as "Out-of-Service" is a feature that is part of the Global Line Cards program. This capability is accomplished through Service Change. A unit marked Out of Service cannot be configured as any other type of unit without first removing it from the Out-of-Service state. A unit marked Out of Service stays Out of Service through Initialization or SYSLOAD operation. This feature reduces the number of cards that must be replaced in situations where only one, or a few circuits, fails to work in the field. In addition, the capability enables support personnel to change high density cards at convenient low-traffic periods.

Operating parameters

There are no operating parameters associated with this feature.

Feature interactions

There are no feature interactions associated with this feature.

Feature packaging

This feature is included in base system software.

Copyright © 1994–2007, Nortel Networks
Nortel Networks Confidential

Feature implementation

Task summary list

The following is a summary of the tasks in this section:

1. "LD 10" (page 218)

   At the TYPE prompt respond with OOSLT to designate single-line terminal units as Out of Service.

2. "LD 11 " (page 218)

   - At the TYPE prompt, respond with OOSMLT to designate multi-line terminal units Out of Service. The capability to make any unit Out of Service, regardless of the card type or density, is also designated by this response.

LD 10

Prompt	Response	Description
REQ:	NEW OUT	New, or remove.
TYPE:	OOSSLT	Out-of-service single-line terminal unit.
TN		Terminal number
	l s c u	Format for Large System and CS 1000E system, where l = loop, s = shelf, c = card, u = unit.
	c u	Format for Small System and Media Gateway 1000B where c = card and u = unit.
		If the REQ is NEW, a check is made to verify that the card already exists, and the unit specified is not already configured.
		If the REQ is OUT, a check is made to verify that the unit is marked Out of Service. If the unit specified to be removed is the last configured unit on the card, the card blocks associated with the logical card are removed.

LD 11

Prompt	Response	Description
REQ:	NEW OUT	New, or remove.
TYPE:	OOSMLT	Out of Service multi-line terminal unit.
TN		Terminal number
	l s c u	Format for Large System and CS 1000E system, where l = loop, s = shelf, c = card, u = unit.

Copyright © 1994–2007, Nortel Networks
Nortel Networks Confidential

Prompt	Response	Description
	c u	Format for Small System and Media Gateway 1000B where c = card and u = unit. If the REQ is NEW, a check is made to verify that the card already exists, and the unit specified is not already configured. If the REQ is OUT, a check is made to verify that the unit is Out of Service. If the unit specified to be removed is the last configured unit on the card, the card blocks associated with the logical card are removed.

Feature operation

No specific operating procedures are required to use this feature.

Copyright © 1994–2007, Nortel Networks
Nortel Networks Confidential

Copyright © 1994–2007, Nortel Networks
Nortel Networks Confidential

Overlay 45 Limited Repeats

Contents

This section contains information on the following topics:

"Feature description" (page 221)

"Operating parameters" (page 222)

"Feature interactions" (page 222)

"Feature packaging" (page 222)

"Feature implementation" (page 222)

"Feature operation" (page 222)

Feature description

Overlay 45, the Background Continuity Diagnostics, is automatically loaded whenever a power fault is detected, and runs in the background. This feature allows a limit to be placed on the number of times that background continuity tests are run by this overlay. This limit is system configured in LD 17, and may have a value from 0-31. Once the defined value has been reached, the regular background programs are restored. The alarm is not cleared. Because the alarm has not been cleared, overlay 45 is not reloaded before the end of the current midnight routine cycle. At the end of the midnight cycle, the alarm is cleared by the overlay supervisor.

If there are no midnight routines, overlay 45 starts a timer which is decreased at regular intervals by the work scheduler. The alarm is not cleared at this point. Therefore, overlay 45 is not reloaded for an alarm condition. When the timer expires, the work scheduler clears the alarm. If another alarm condition arises, overlay 45 is automatically loaded and runs as described above.

Copyright © 1994–2007, Nortel Networks
Nortel Networks Confidential

Operating parameters

The system overlay loader checks for power alarms and sets the relevant task request bit, if found. This overlay loader is modified to ignore power alarms once the limit defined for the overlay repeats has been reached, until the end of the current midnight routine cycle, if there is one.

It is advised that a printer be used to obtain hard copy information on the continuity tests run by overlay 45, rather than relying on the history file, if one is available.

Feature interactions

There are no feature interactions associated with this feature.

Feature packaging

This feature is packaged under International Supplementary Features (SUPP) package 131.

Feature implementation

LD 17 - Configure Overlay 45 Limited Repeats parameters, at the CY45 prompt.

Prompt	Response	Description
REQ	NEW CHG	New, or change.
TYPE	CFN OVLY	Configuration Record. Overlay area options.
...		
- CY45	(0)-31	Cycles of LD 45. Cycles of LD 45 can be run whenever a fault is detected. If any number from 1 to 31 is entered, that is the number of times LD 45 will run under fault conditions. If 0 is entered, the system will perform as before without limiting the number of LD 45 runs.

Feature operation

No specific operating procedures are required to use this feature.

Copyright © 1994–2007, Nortel Networks
Nortel Networks Confidential

Overlay Cache Memory

Contents

This section contains information on the following topics:

"Feature description" (page 223)

"Operating parameters" (page 224)

"Feature interactions" (page 225)

"Feature packaging" (page 225)

"Feature implementation" (page 225)

"Feature operation" (page 225)

Feature description

The Overlay Cache Memory feature uses Protected Data Storage (PDS) as a cache area for storing overlays loaded from disk. The cache memory overlays are accessed much faster than those on disk, reducing the load time to approximately one second.

A maximum of 32 overlays can reside in Overlay Cache Memory at one time. The CACH prompt in option 17 defines the number of cache memory buffers allocated in protected memory. Each overlay resides in a buffer. A zero entry deactivates this feature and requires all overlays to be loaded from disk.

Each buffer requires 19K of Protected Data Storage (PDS). If there is insufficient memory to store the number of buffers requested, a warning message follows the option 17 prompt sequence. The message indicates that more memory is required to store all the caches requested.

If a small number of cache memory buffers are allocated, frequently used overlays may be removed from protected memory by seldom used overlays. The PRTY prompt in option 17 sets an overlay priority flag. A priority flag

Copyright © 1994–2007, Nortel Networks
Nortel Networks Confidential

prevents the removal of an overlay from cache memory. The number of priority flags set cannot exceed the number of cache memory buffers specified.

When an LD xx command is entered, the cache memory is checked for the requested overlay. If the requested overlay is in cache memory, its data portion is rapidly copied to the regular overlay area.

A requested overlay that is not in cache memory is loaded from the disk into the normal overlay area and simultaneously stored into a cache memory buffer, if one is available. If one is not available, the new overlay overwrites another in the cache memory.

If an overlay is loaded from disk and no unused buffer area exists, the overlay used longest ago without its priority flag set is removed and replaced by the new overlay.

Operating parameters

If the feature is deactivated with a zero (0) entry at the CACH prompt in LD 17, no cache memory exists and all overlays are loaded from disk.

Cache memory is not affected by a system initialization. After a system initialization, it is not necessary to reload overlays from the disk.

Each buffer requires 19K of PDS. The number of cache memory buffers allocated to the system is limited by the availability of spare memory. If enough memory exists, a maximum of 32 cache memory buffers is allowed. Each buffer stores one overlay.

The number of overlay priorities (PRTY) that can be set is dependent upon software version.

To load an overlay from disk, use the command LD xx D. This is necessary for the system to determine which overlay to read. The LD xx D command loads the overlay from disk and overwrites the same overlay existing in cache memory.

Using the LD xx D command to force load an overlay from disk does not simultaneously support the peripheral download SUSP command.

When overlays are stored in cache memory, the ENLT and DIST commands are not supported.

Copyright © 1994–2007, Nortel Networks
Nortel Networks Confidential

The system automatically stores and retrieves overlays from cache memory. If the cache area is full when a new overlay is requested, the overlay gone unused the longest without a priority flag set is removed and replaced by the new overlay. Daily routines and background-loaded overlays are not stored in cache memory.

Conversion and upgrades

Due to memory requirements, installing a new issue of software or the same issue with additional features may reduce the number of cache buffers that can be allocated. A warning message indicates this reduction has occurred.

If this reduction causes the number of overlay priorities to exceed the maximum number of cache buffers, the overlay priorities are reduced to equal the number of cache buffers. The priorities are automatically reduced by beginning with the highest overlay number and working downward.

Feature interactions

There are no feature interactions associated with this feature.

Feature packaging

This feature is included in the base system software.

Feature implementation

LD 17 - Enter the number of overlay buffers and priority of stored overlays.

Prompt	Response	Description
REQ	CHG	Change data.
TYPE	CFN OVLY	Configuration Record. Overlay area options.
OVLY	YES	Change overlay area.
- CACH	(0) 2-32	Number of overlay buffers held in cache memory. Entering 0 disables the feature.
- PRTY	xx xx xx xx...	Set priority for the stored overlays. Priority can be set only for the number of overlays specified in CACH. xx = the overlay number. An X preceding the number deletes the priority flag for that overlay.

Feature operation

No specific operating procedures are required to use this feature.

Copyright © 1994–2007, Nortel Networks
Nortel Networks Confidential

Copyright © 1994–2007, Nortel Networks
Nortel Networks Confidential

Override

Contents

This section contains information on the following topics:

"Feature description" (page 227)

"Operating parameters" (page 228)

"Feature interactions" (page 228)

"Feature packaging" (page 231)

"Feature implementation" (page 231)

"Feature operation" (page 233)

Feature description

The Override feature provided in base system software allows a user to enter into an established connection. A warning tone notifies the talking parties that a third party is about to enter the conversation. The warning tone is an initial one-second burst, followed by a 256 millisecond burst repeated every 16 seconds. The Override feature can be used after a user has dialed a busy Directory Number (DN).

Forced Camp-On and Priority Override

The Forced Camp-On and Priority Override features provide enhancements to the basic Camp-On feature. Forced Camp-On is similar to the regular Station-to-Station Camp-On, except that it can be done without an internal or external call on hold. Forced Camp-On is activated automatically (if Automatic Forced Camp-On is defined); or it can be activated manually using the Enhanced Override (EOVR) key on system telephones or the Enhanced Override Flexible Feature Code on analog (500/2500-type) telephones.

Copyright © 1994–2007, Nortel Networks
Nortel Networks Confidential

The telephone performing the override must have a priority level equal to or higher than the telephone being overridden. Priority Override is activated by dialing the Override Flexible Feature Code on analog (500/2500-type) telephones, or by pressing the Override key (OVR) on system telephones.

Operating parameters

On Meridian 1 proprietary telephones, a separate Override key must be assigned. An associated lamp is not required.

On analog (500/2500-type) telephones, a Flexible Feature Code (FFC) is required to override a call.

Override cannot be used to enter an established connection if any party (telephone or trunk) has Warning Tone Denied Class of Service. In this case, overflow tone is heard.

The system must have a conference loop.

Feature interactions

Attendant Break-In

When one system telephone has overridden an existing call to establish a Conference call, Break-In is temporarily denied. The attendant is notified using the Override tone.

Telephones with a toll operator break-in call cannot be overridden. Overflow tone is returned to telephones attempting Priority Override.

Automatic Redial

An Automatic Redial (ARDL) call cannot be overridden. This is done to avoid creating a conference when a tone detector is involved.

Call Forward/Hunt Override using Flexible Feature Code

It is possible to use Priority Override after using the Call Forward/Hunt Override FFC and encountering a busy set.

Call Party Name Display

When Overriding an established call, the displays of the other telephones show the DN and name of the overriding party.

Camp-On

Station-to-Station Camp-On and Attendant Camp-On are not affected by Forced Camp-On or Priority Override. The following new Classes of Service affect only Forced Camp-On:

- Camp-On From Another Telephone Allowed (CPFA)

Copyright © 1994–2007, Nortel Networks
Nortel Networks Confidential

- Camp-On From Another Telephone Denied (CPFD)
- Camp-On To Another Telephone Allowed (CPTA)
- Camp-On To Another Telephone Denied (CPTD)

The Station Camp-On (SCMP) package 121 is required to return busy tone instead of ringback tone to the party camping on.

Camp-On, Forced

When Priority Override is activated, it replaces normal override. Once Priority Override has been performed on a set, its Digit Display shows the DN of the overriding set.

Charge Account and Calling Party Number

When Charge Account is used during active Override, some digits may be lost. When entered with Override in conference, a Charge Account number is accepted and no digits are lost.

China - Attendant Monitor

A set may operate override to join into a desired call. If the desired call is being Attendant Monitored at the time, one of the following occurs:

- If the desired call is a conference call, the override attempt is blocked as per existing operation.
- If the call is a simple one with the Attendant Monitoring with no tone, the override attempt is successful and Attendant Monitor is deactivated.
- If the call is a simple one with the Attendant Monitoring with tone, the override attempt is blocked.

Conference

Override cannot be used to enter a Conference call.

Do Not Disturb

Telephones with Do Not Disturb enabled cannot be overridden. Overflow (fast busy) tone is returned to telephones attempting Priority Override.

Group Hunt

Override will not be supported.

Hot Line

A Hot Line call can be entered using the Override feature.

Copyright © 1994–2007, Nortel Networks
Nortel Networks Confidential

Make Set Busy

Telephones with MSB active cannot be overridden. Overflow (fast busy) tone is returned to telephones attempting Priority Override Voice Call is blocked by MSB.

Multi-Party Operations

With Multi-Party Operations (MPO), when a consultation call is made on a set equipped with Priority Override, a control digit has to be dialed from the set to perform a recall and return the call on hold.

Network Intercom

An internal Hot Type I call never returns busy, unless the call became a non-Hot Line call due to the Hot Line key being busy. In this case, the call behaves like a normally dialed call, and override can be used upon receipt of a busy signal.

Night Restriction Classes of Service

If Priority Override and Night Restriction for Priority Override Class of Service (NROA) are assigned, Priority Override will be operational for the set only when Night Service is in effect.

On Hold on Loudspeaker

It will not be possible to Override into a call on loudspeaker as it is effectively on hold at the set.

Override, Enhanced
Priority Override

If Priority Override is equipped, it replaces Override when using the OVR key or OVRD FFC. However, Override can be simulated by using the default PLEV, 2, for all trunk routes and sets.

Periodic Camp-on Tone

The Periodic Camp-On Tone has precedence over Override intrusion tone.

Phantom Terminal Numbers, Call Forward

Call Forward cannot be overridden on phantom terminal numbers. The overflow tone occurs if an Override is attempted.

Ring Again

Ring Again is the only other feature currently available once a busy telephone has been encountered. Ring Again is not allowed on an analog (500/2500-type) telephone making a Multi-Party Operations consultation call.

Copyright © 1994–2007, Nortel Networks
Nortel Networks Confidential

Uninterrupted Line Connections

Override cannot be applied to stations with a Warning Tone Denied Class of Service.

Feature packaging

Override is included in base system software.

For analog (500/2500-type) telephones, Flexible Feature Code (FFC) package 139 must be equipped.

Forced Camp-On/Priority Override (POVR) is package 186.

Feature implementation

Task summary list

The following is a summary of the tasks in this section:

1. "LD 10" (page 231)

   Allow Override for analog (500/2500-type) telephones.

2. "LD 11" (page 232)

   Add or change Override for Meridian 1 proprietary telephones.

3. "LD 14" (page 232)

   - Define Warning Tone Allowed for trunks to permit Override.

4. "LD 57" (page 233)

   Configure Flexible Feature Code (FFC) for Override on an analog (500/2500-type) telephones.

LD 10

Prompt	Response	Description
REQ:	CHG	Change.
TYPE:	500	Telephone type.
TN		Terminal number
	l s c u	Format for Large System and CS 1000E system, where l = loop, s = shelf, c = card, u = unit.

Copyright © 1994–2007, Nortel Networks
Nortel Networks Confidential

Prompt	Response	Description
	c u	Format for Small System and Media Gateway 1000B where c = card and u = unit.
CLS	(OVDD) OVDA (XFD) XFA (WTA) WTD	Override (denied) allowed for this telephone. Transfer (denied) allowed. Warning Tone (allowed) denied (WTA is required to be overridden).

LD 11

Prompt	Response	Description
REQ:	CHG	Change.
TYPE:	a...a	Telephone type. Type **?** for a list of possible responses.
TN		Terminal number
	l s c u	Format for Large System and CS 1000E system, where l = loop, s = shelf, c = card, u = unit.
	c u	Format for Small System and Media Gateway 1000B where c = card and u = unit.
CLS	(WTA) WTD	Warning Tone (allowed) denied (WTA is required to be overridden).
KEY	xx OVR	Override key

LD 14

Prompt	Response	Description
REQ:	CHG	Change.
TYPE:	aaa	Trunk type, where: aaa = ADM, AID, ATVN, AWR, CAA, CAM, COT, CSA, DIC, DID, FEX, ISA, MDM, MUS, PAG, RAN, RCD, RLM, RLR, TIE, or WAT.
TN		Terminal number
	l s c u	Format for Large System and CS 1000E system, where l = loop, s = shelf, c = card, u = unit.

Copyright © 1994–2007, Nortel Networks
Nortel Networks Confidential

Prompt	Response	Description
	c u	Format for Small System and Media Gateway 1000B where c = card and u = unit.
CLS	(WTA) WTD	Warning Tone (allowed) denied (WTA is required to be overridden).

LD 57

Prompt	Response	Description
REQ	CHG	Change.
TYPE	FFC	Flexible Feature Codes.
CUST	xx	Customer number, as defined in LD 15
CODE	OVRD	Change Override access code.
OVRD	xxxx	Override access code.

Feature operation

To override a call in progress from a Meridian 1 proprietary telephone:

Step	Action
1	Dial the number. You hear a busy tone.
2	Press **Override**. Everyone hears a one-second tone burst.
3	You are connected to the call.

—End—

To cancel Override from a Meridian 1 proprietary telephone:

Step	Action
1	Press **Rls** or hang up.
2	You are disconnected. The original call remains active.

—End—

To override a call in progress from an analog (500/2500-type) telephone:

Step	Action
1	Dial the number. You hear busy tone.

Copyright © 1994–2007, Nortel Networks
Nortel Networks Confidential

2	Flash the switchhook or press **LINK**.
3	Dial the Flexible Feature Code (FFC) for Override. Everyone hears a one-second tone burst.
4	You are connected to the call.

—End—

To cancel Override from an analog (500/2500-type) telephone:

Step	Action
1	Press **Rls** or hang up.
2	You are disconnected. The original call remains active.

—End—

Copyright © 1994–2007, Nortel Networks
Nortel Networks Confidential

Override, Enhanced

Contents

This section contains information on the following topics:

"Feature description" (page 235)

"Operating parameters" (page 238)

"Feature interactions" (page 240)

"Feature packaging" (page 242)

"Feature implementation" (page 242)

"Feature operation" (page 246)

Feature description

The use of the Forced Camp-On and Priority Override features together results in Enhanced Override (EOVR).

Forced Camp-On

Forced Camp-On allows a call to be camped on and a warning to be given before the Priority Override operation. It differs from normal Camp-On in that both internal and external calls can be camped on, rather than just external calls as with the Camp-On feature. The Forced Camp-On may be automatic or manual. The manual operation requires the use of the Enhanced Override (EOVR) feature.

Forced Camp-On can be used as a feature by itself or in conjunction with Priority Override. The combination of the two features is referred to as Enhanced Override (EOVR).

For manual Forced Camp-On an analog (500/2500-type) telephone, the user has to dial the EOVR Flexible Feature Code (FFC), while a Meridian 1 proprietary telephone user has to use the EOVR key.

Copyright © 1994–2007, Nortel Networks
Nortel Networks Confidential

A second operation of the EOVR key or FFC executes Enhanced Override.

Forced Camp-On is similar to Station-to-Station Camp-On, except that Forced Camp-On can be done with either no call on hold or an external or internal call on hold. It can be done automatically or manually, which is determined by the response to the Automatic Forced Camp-On (AFCO) prompt in LD 15.

For manual operation, once a busy telephone has been reached, the first depression of the EOVR key or the first dialing of the EOVR FFC attempts Forced Camp-On. If successful, Forced Camp-On introduces Camp-On tone into the connection. If unsuccessful, overflow (fast busy) tone is returned to the party attempting the Forced Camp-On.

For Forced Camp-On to be allowed, all other methods of call termination must have been tried, and the last one must be Camp-On. If Station-to-Station Camp-On or Automatic Forced Camp-On has occurred, or Forced Camp-On has been excluded by the new telephone options, then the first depression of the EOVR key or first dialing of the EOVR FFC introduces Enhanced Override. If, however, Forced Camp-On is denied by existing Camp-On restrictions, Enhanced Override is also denied.

Priority Override

The Priority Override (POVR) feature allows users to break in to an established connection. To do this, analog (500/2500-type) telephone users use the OVRD Flexible Feature Code (FFC), and Meridian 1 proprietary telephone users use the Override (OVR) key before Camp-On.

The Priority Override Level (PLEV) restrictions apply to both Enhanced and Priority Override.

For Priority Override, the overriding telephone must have a Priority Override Level (PLEV) greater than or equal to the PLEV of the telephone or trunk to be overridden.

For an analog (500/2500-type) telephone, a recall followed by dialing the Priority Override FFC (Override FFC with Priority Override package 186 equipped), breaks into the connection and establishes a conference between all three parties and sends an override tone. For a Meridian 1 proprietary telephone, the OVR key is used in place of the FFC.

Copyright © 1994–2007, Nortel Networks
Nortel Networks Confidential

In order for Priority Override to be allowed, all telephones and trunks involved must have Warning Tone Allowed (WTA) Class of Service. Each telephone and trunk route (TIE, DID, and COT) is assigned a PLEV as outlined in Table 3 "PLEV assignments" (page 237).

Table 3
PLEV assignments

PLEV	Indication
0	This telephone or route cannot be overridden; if assigned to a telephone, the telephone cannot override.
1	This telephone or route can be overridden; if assigned to a telephone, the telephone cannot override.
2	This telephone or route can be overridden by telephones assigned level 2 through level 7; if assigned to a telephone, the telephone can override level 1 and level 2.
3-6	(Similar to level 2) This telephone or route can be overridden by telephones assigned an equal or higher level; if assigned to a telephone, the telephone can override lower and equal levels, except level 0.
7	This telephone or route can be overridden by another level 7 telephone only; if assigned to a telephone, the telephone can override level 1 through level 7.

Several combinations of the Forced Camp-On and Priority Override are highlighted in the following list:

- Responding to the Automatic Forced Camp-On (AFCO) prompt in LD 15 with "NO," configuring Meridian 1 proprietary telephones with only Override (OVR) keys, and defining the Override (OVRD) Flexible Feature Code (FFC) disallows the use of Forced Camp-On.
- Responding to the Automatic Forced Camp-On (AFCO) prompt in LD 15 with "NO" and setting the Priority Level (PLEV) to 0 and the Camp-On Classes of Service to Camp-On From Another Telephone Denied (CPFD) and Camp-On To Another Telephone Denied (CPTD) gives manual Camp-On only.
- Configuring the EOVR FFC for analog (500/2500-type) telephone users and equipping Meridian 1 proprietary telephones with EOVR keys gives the users the ability to use only Priority Override (using OVR key or OVRD FFC) or Forced Camp-On followed by Priority Override (pressing the EOVR key twice or using EOVR FFC).
- Responding to the Automatic Forced Camp-On (AFCO) prompt in LD 15 with "YES," configuring Meridian 1 proprietary telephones with only Override (OVR) keys, and defining the Override (OVRD) Flexible Feature Code (FFC) automatically applies Forced Camp-On in situations where

Copyright © 1994–2007, Nortel Networks
Nortel Networks Confidential

it is allowed, and allows the use of the OVR key and FFC to implement Priority Override.

- Using an EOVR key or FFC with a response of "YES" to the AFCO prompt in LD 15 simulates the Override (OVR) key or FFC unless Forced Camp-On was denied initially, in which case the Forced Camp-On would be re-attempted.

The following table summarizes the various combinations:

Table 4
Summary of various combinations of Forced Camp-On and Priority Override.

	AFCO = NO	AFCO = YES
OVR FFC or key	Attempts Priority Override.	Attempts Priority Override whether Forced Camp-On occurred or not.
EOVR FFC or key	First use attempts Forced Camp-On, unless station is camped on, then Priority Override is attempted. Second use attempts Priority Override.	If automatic Forced Camp-On was denied, re-attempts Forced Camp-On; otherwise Priority Override is attempted.

Operating parameters

The Flexible Feature Codes (FFC) package 139 must be equipped for Forced Camp-On and Priority Override to be available from analog (500/2500-type) telephones.

For analog (500/2500-type) telephone activation, the Multi-Party Operations (MPO) package 141 must be equipped, with the "YES" as the response to the RALL prompt in LD 15 to ensure that register recalls are required before dialing control digits. The OVRD and EOVF FFCs defined must not start with the same digit as one of the control digits. The control digits are defined in LD 15 and are printed as part of the Customer Data Block in LD 21.

If Priority Override is equipped, it replaces Override when the user uses the OVR key or OVRD FFC. However, Override can be simulated by using the default value, 2, for all trunk routes and telephones.

Telephones or trunks involved in any of the following cannot be camped on or overridden:

- Non-established call
- Conference call
- Attendant call

Copyright © 1994–2007, Nortel Networks
Nortel Networks Confidential

- Attendant call using Centralized Attendant Service (CAS), Primary Rate Interface (PRI), or Integrated Services Digital Network (ISDN) trunk
- Make Set Busy
- Do Not Disturb
- Automatic Call Distribution (ACD) call
- Operator Call Back
- Hold
- Data call
- Release Link call, or
- Parked call.

Call Forward and Hunting take precedence over Call Waiting. If Call Waiting is allowed, Camp-On is not attempted. If Call Waiting is not allowed, Station-to-Station Camp-On is automatically attempted. If this succeeds, Priority Override can still follow. If Camp-On fails because there is no external call, Forced Camp-On and Priority Override may still work. However, if Camp-On fails because of other limitations, Forced Camp-On and Priority Override will also not work.

Even though Camp-On will still function when Warning Tone Denied (WTD) Class of Service is defined, Forced Camp-On and Priority Override require Warning Tone Allowed (WTA) Class of Service.

Priority Override is not allowed on analog (500/2500-type) telephones unless the Override Allowed (OVDA) Class of Service is defined. This Class of Service is also used for Override. This Class of Service does not affect Camp-On.

Camp-On requires an external call on hold. Forced Camp-On can be done without a call on hold, or with both internal or external calls on hold.

Trunks cannot perform Priority Override. They also cannot be overridden unless they are the unwanted party of a connection. It is for this exception that trunks are given a Priority Level.

New Camp-On Classes of Service (Camp-On From Another Telephone Allowed [CPFA], Camp-On From Another Telephone Denied [CPFD], Camp-On To Another Telephone Allowed [CPTA], and Camp-On To Another Telephone Denied [CPTD]) apply to Forced Camp-On and Automatic Forced Camp-On (AFCO) only. They do not apply to Station or Attendant Camp-On.

If a telephone is denied Forced Camp-On by Class of Service, Priority Override may still be attempted.

Copyright © 1994–2007, Nortel Networks
Nortel Networks Confidential

Feature interactions

Attendant Break-In

Telephones with a toll operator break-in call cannot be camped on to or overridden. Overflow tone is returned to telephones attempting either Forced Camp-on or Priority Override.

Attendant calls, Automatic Call Distribution

Telephones involved in Automatic Call Distribution (ACD) calls cannot be force camped on or priority overridden. Overflow (fast busy) tone is returned to telephones attempting either Forced Camp-On or Priority Override.

Call Hold Deluxe, Call Hold Permanent

Neither held calls nor telephones with calls on hold may be camped on or overridden. Overflow (fast busy) tone is returned to telephones attempting either a Forced Camp-On or Priority Override.

Camp-On

Station-to-Station Camp-On and Attendant Camp-On are not affected by Forced Camp-On or Priority Override. The following new Classes of Service affect only Forced Camp-On:

- Camp-On From Another Telephone Allowed (CPFA)
- Camp-On From Another Telephone Denied (CPFD)
- Camp-On To Another Telephone Allowed (CPTA)
- Camp-On To Another Telephone Denied (CPTD])

The Station Camp-On (SCMP) package 121 is required to return busy tone instead of ringback tone to the party camping on.

Conference calls

Telephones involved in conference calls cannot be force camped on or priority overridden. Overflow (fast busy) tone is returned to telephones attempting either Forced Camp-On or Priority Override.

China - Attendant Monitor

A set may operate enhanced override on a desired call. If the desired call is being Attendant Monitored at the time, existing operation occurs for the first time the Enhanced Override key is pressed. The second time the key is pressed, the interaction with Attendant Monitor is the same as with regular override.

Data calls

Data calls have Warning Tone Denied (WTD) Class of Service, and cannot be force camped on or priority overridden. Overflow (fast busy) tone is returned to telephones attempting Forced Camp-On or Priority Override.

Copyright © 1994–2007, Nortel Networks
Nortel Networks Confidential

Digit Display

The Digit Display of the telephones being overridden changes to the Directory Number (DN) of the telephone overriding once Priority Override is accomplished.

Do Not Disturb

Telephones with Do Not Disturb (DND) enabled cannot be force camped on or priority overridden. Overflow (fast busy) tone is returned to telephones attempting either Forced Camp-On or Priority Override.

Hold

Neither held calls nor telephones with calls on hold may be camped on or overridden. Overflow (fast busy) tone is returned to telephones attempting either Forced Camp-On or Priority Override.

Make Set Busy

Telephones with Make Set Busy active cannot be Forced Camp-On or Priority Override. Overflow (fast busy) tone is returned to telephones attempting either Forced Camp-On or Priority Override.

Multi-Party Operations

With Priority Override (POVR) equipped, there is a slight change in Multi-Party Operations functionality. When a consultation call is made without POVR equipped, and the telephone being called is busy, a recall returns to the party on hold without dialing a control digit. However, if POVR is equipped, a control digit must be dialed. Any control digit releases the busy call and returns to the call on hold.

Operator Call Back

Telephones involved in an Operator Call Back call or Toll Operator Break-In cannot be force camped on or priority overridden. Overflow (fast busy) tone is returned to telephones attempting either Forced Camp-On or Priority Override.

Override

If Priority Override is equipped, it replaces Override when using the OVR key or OVRD FFC. However, Override can be simulated by using the default PLEV, 2, for all trunk routes and telephones.

Ring Again

Ring Again (RGA) is the only other feature currently available once a busy telephone has been encountered. RGA is not allowed on an analog (500/2500-type) telephone making a Multi-Party Operations consultation call.

Copyright © 1994–2007, Nortel Networks
Nortel Networks Confidential

Feature packaging

To provide the Enhanced Override capabilities, the following packages are required:

- Station Camp-On (SCMP) package 121
- Flexible Feature Codes (FFC) package 139
- Multi-Party Operations (MPO) package 141, and
- Priority Override/Forced Camp-On (POVR) package 186.

Feature implementation

Task summary list

The following is a summary of the tasks in this section:

1. "LD 15 " (page 242)

   - Configure the customer for Automatic Forced Camp-On.

2. "LD 15 " (page 243)

   Configure the customer for Station Camp-On tone.

3. "LD 57" (page 243)

   Configure Override and Enhanced Override FFCs.

4. "LD 10" (page 244)

   Configure analog (500/2500-type) telephones for Forced Camp-On, Priority, and Enhanced Override. Enter the Priority Override Level at the PLEV prompt.

5. "LD 11 " (page 245)

   Configure Meridian 1 proprietary telephones for Forced Camp-On, Priority, and Enhanced Override. Enter the Priority Override Level at the PLEV prompt. Define the override keys at the Key prompt.

6. "LD 16" (page 246)

   Configure Route for Forced Camp-On, Priority, and Enhanced Override. Enter the Priority Override Level at the PLEV prompt.

7. "LD 14" (page 246)

   Allow a Warning Tone for trunks with Forced Camp-On, Priority, and Enhanced Override.

LD 15

Prompt	Response	Description
REQ:	NEW CHG	Add, or change.
TYPE:	MPO	Multi-party options data block

Copyright © 1994–2007, Nortel Networks
Nortel Networks Confidential

Prompt	Response	Description
...		
- AFCO	(NO) YES	Automatic Forced Camp-On. Enter YES if Forced Camp-On is to be applied automatically. Enter NO if Forced Camp-On is to be applied manually.

LD 15

Prompt	Response	Description
REQ:	NEW CHG	Add, or change.
TYPE:	FTR	Features and options data block
...		
- STCB	(NO) YES	Station Camp-On Busy tone. Enter NO if Busy Tone is not to be given to the transferring (controlling) party when the desired station is busy. Enter YES if Busy Tone is to be given to the transferring (controlling) party when the desired station is busy.

LD 57

Prompt	Response	Description
REQ	NEW CHG	Add, or change.
TYPE	FFC	Flexible Feature Codes.
...		
CODE	x...x	Code to be programmed. Where x...x may be one of the following: OVRDOverride (OVRD is used for Priority Override when the Priority Override [POVR] package 186 is equipped.) EOVREnhanced Override (Is programmable only when the Priority Override [POVR] package 186 is equipped.)
X...X	y...y	The user is prompted with X...X, where X...X is the FFC code entered in response to the CODE prompt.

Copyright © 1994–2007, Nortel Networks
Nortel Networks Confidential

Prompt	Response	Description
		y...y is a one-to-seven character input that the user must dial to use the FFC. Valid inputs are digits 0 through 9, asterisk (*), and octothorpe (#).

LD 10

Prompt	Response	Description
REQ:	NEW CHG	Add, or change.
TYPE:	500	Telephone type.
...		
CLS		Class of Service.
	(CPFA) CPFD	Forced Camp-On from another telephone to this telephone (allowed) denied.
	(CPTA) CPTD	Forced Camp-On to another telephone from this telephone (allowed) denied.
	OVDA WTA	Override allowed. Warning Tone allowed.
...		
PLEV	0-(2)-7	Priority Override Level 0 Indicates that this telephone cannot be overridden or override. 1 Indicates that this telephone can be overridden but cannot override. 2 Indicates that this telephone can be overridden by telephones assigned level 2 through level 7 and that the telephone can override level 1 and level 2. 3-6 Similar to level 2, indicates that this telephone can be overridden by telephones assigned an equal or higher level and that it can override lower and equal levels, except level 0.

Copyright © 1994–2007, Nortel Networks
Nortel Networks Confidential

Prompt	Response	Description
		7 Indicates that this telephone can be overridden by another level 7 telephone only and that it can override level 1 through level 7.

LD 11

Prompt	Response	Description
REQ:	NEW CHG	Add, or change.
TYPE:	a...a	Telephone type. Type **?** for a list of possible responses.
...		
CLS		Class of Service.
	(CPFA) CPFD	Forced Camp-On from another telephone to this telephone (allowed) denied.
	(CPTA) CPTD	Forced Camp-On to another telephone from this telephone (allowed) denied.
	WTA	Warning Tone allowed.
...		
PLEV	0-(2)-7	Priority Override Level.
		0 Indicates that this telephone cannot be overridden or override.
		1 Indicates that this telephone can be overridden but cannot override.
		2 Indicates that this telephone can be overridden by telephones assigned level 2 through level 7 and that the telephone can override level 1 and level 2.
		3-6 Similar to level 2, indicates that this telephone can be overridden by telephones assigned an equal or higher level and that it can override lower and equal levels, except level 0.
		7 Indicates that this telephone can be overridden by another level 7 telephone only and that it can override level 1 through level 7.
...		
KEY		Define keys.

Copyright © 1994–2007, Nortel Networks
Nortel Networks Confidential

Prompt	Response	Description
	xx OVR	Override (If Priority Override [POVR] package [186] is equipped, the OVR key is used for Priority Override.)
	xx EOVR	Enhanced Override (Allowed to be programmed only if Priority Override [POVR] package [186] is equipped.)

LD 16

Prompt	Response	Description
REQ	NEW CHG	Add, or change.
TYPE	RDB	Route Data Block
...		
PLEV	0-(2)-7	Priority Override Level. 0 Cannot be overridden. 1-7 Can be overridden by a telephone with a Priority Level that is equal to or greater than the level assigned to this route. Trunks cannot override, but the levels of all parties in a connection are examined to determine if the connection may be overridden.

LD 14

Prompt	Response	Description
REQ	NEW CHG	Add, or change.
...		
CLS		Class of Service.
	WTA	Warning Tone Allowed.

Feature operation

Forced Camp-On and Priority Override can be used when making either a simple call or consultation call (that is, having a call on hold while calling another party) call. The following feature operation descriptions use telephone A (an analog (500/2500-type) telephone) or telephone E (a Meridian 1 proprietary telephone) to call telephone B, which is connected to party C. Party D is used as the party on hold when either A or E is making a consultation call.

Copyright © 1994–2007, Nortel Networks
Nortel Networks Confidential

The telephones are configured as follows:

1. Telephone A is an analog (500/2500-type) telephone with Warning Tone Allowed (WTA) and Override Allowed (OVDA) Classes of Service.
2. Telephone B has Warning Tone Allowed (WTA) Class of Service.
3. Party C has Warning Tone Allowed (WTA) Class of Service and can be any telephone type or a Direct Inward Dial (DID), TIE, or Central Office (Public Exchange) (COT) trunk.
4. Party D can be any telephone or trunk.
5. Telephone E is a Meridian 1 proprietary telephone with Warning Tone Allowed (WTA) Class of Service and both an Override (OVR) and Enhanced Override (EOVR) key equipped.

For examples 1 to 4, assume the following:

1. Telephones A and E have a Priority Override Level (PLEV) of greater than "1".
2. Telephones A and E both have Camp-On From Another Telephone Allowed (CPFA) Class of Service.
3. Telephone B and party C both have PLEVs greater than "0", but less than or equal to those of telephones A and E.
4. Both telephone B and party C are involved in a simple call, not a conference call.
5. Telephone B has Camp-On To Another Telephone Allowed (CPTA) Class of Service.
6. Call Forward, Hunting, and Call Waiting are not in use.

Examples 1 to 4 are done with various combinations of Forced Camp-On and Priority Override. Forced Camp-On may be denied by responding "NO" to the Automatic Forced Camp-On (AFCO) prompt in LD 15, by configuring telephone E with only an Override (OVR) key and defining only the Override (OVRD) FFC in LD 57, or by setting the Classes of Service for both telephone A and E to Camp-On To Another Telephone Denied (CPTD) and Camp-On From Another Telephone Denied (CPFD). Both of these methods of disabling the Forced Camp-On feature do not affect the Priority Override feature. However, any conditions that would prevent Forced Camp-On from occurring also prevent Priority Override.

In the following feature operation descriptions, the term "recall" refers to a register recall, which may be performed in a number of different ways. Some typical examples are:

- Flashing the switchhook. This is the equivalent of hanging up the handset and picking it back up. This on hook, off hook action is

Copyright © 1994–2007, Nortel Networks
Nortel Networks Confidential

performed in a time less than what the system would consider to be a valid disconnect.

- Pressing the flash or LINK button if equipped.

The Camp-On tone is always provided for Forced Camp-On, because Warning Tone Allowed (WTA) Class of Service is a prerequisite. This tone can be a buzz for Meridian 1 proprietary telephones or a single burst of tone for analog (500/2500-type) telephones if the customer option Periodic Camp-On Tone Denied (CTD) is selected in LD 15. If the customer option Periodic Camp-On Tone Allowed (CTA) is selected in LD 15, the Camp-On Tone as defined in the Flexible Tones and Cadences (FTC) LD 56 in response to the CAMP prompt will be used. The Priority Override tone used is the same tone as used for Override; this tone is defined in response to the OVRD prompt in the FTC LD 56.

While camping on, the party attempting the Camp-On, either telephone A or E, receives ringback if the Station Camp-On (SCMP) package 121 is not equipped, or receives either ringback or busy tone, as defined by the response to the Station Camp-On Busy tone (STCB) prompt in LD 15 if the SCMP package is equipped.

Override will take place on any established call when the Flexible Feature Code (FFC) is dialed or the Override (OVR) key is pressed. That means if telephone A calls telephone B while telephone B is busy and telephone B disconnects from that call and is established on another call when telephone A activates Override, the new call will be overridden.

Example 1-Enhanced Override with an analog (500/2500-type) telephone

With automatic Forced Camp-On turned off; Response to AFCO in LD 15 was "NO"

Table 5
Example of Enhanced Override with an analog telephone, with AFCO turned off.

STEP	ACTION	RESPONSE
1	B and C are connected in a simple call.	
2	A dials B.	A receives busy tone.
3	A performs a recall.	A receives special dial tone (SDT).
4	A dials OVRD FFC to attempt Priority Override. **-or-**	If telephone B or C has disconnected, telephone A receives overflow (fast busy) tone. Otherwise, a conference is established between A, B, and C with Override tone given.

Copyright © 1994–2007, Nortel Networks
Nortel Networks Confidential

STEP	ACTION	RESPONSE
4a	A dials EOVR FFC to attempt Forced Camp-On.	If telephone B or C has disconnected, telephone A receives overflow (fast busy) tone. Otherwise B receives Camp-On tone and A receives ringback or busy tone depending on the options equipped. A is manually forced camped on to B.
4b	B disconnects from the call.	Telephone A rings telephone B.
	-or-	
4b	A performs a recall.	A receives SDT.
4c	A dials EOVR FFC to attempt Priority Override.	If telephone B or C has disconnected, telephone A receives overflow (fast busy) tone. Otherwise, a conference is established between A, B, and C with Override tone given.
5	If any party disconnects...	A simple two-party call is established.

With automatic Forced Camp-On turned on; response to AFCO in LD 15 was "YES".

Table 6
Example of Enhanced Override with an analog telephone, with AFCO turned on.

STEP	ACTION	RESPONSE
1	B and C are connected in a simple call.	
2	A dials B.	A attempts Forced Camp-On to B.
2a	If Forced Camp-On was successful...	A receives ringback or busy tone depending on the options equipped. A is automatically forced camped on to B.
2b	B disconnects.	A rings B.
	-or-	
2a	A performs a recall and dials the OVRD or EOVR FFC to attempt Priority Override.	If telephone B or C has disconnected, telephone A receives overflow (fast busy) tone. Otherwise, a conference is established between A, B, and C with Override tone given.
	-or-	
2a	If Forced Camp-On was unsuccessful due to Class of Service restrictions...	A receives busy tone.

Copyright © 1994–2007, Nortel Networks
Nortel Networks Confidential

STEP	ACTION	RESPONSE
2b	A performs a recall and dials OVRD or EOVR FFC to attempt Priority Override.	If telephone B or C has disconnected, telephone A receives overflow (fast busy) tone. Otherwise, a conference is established between A, B, and C with Override tone given.
	-or-	
2a	If Forced Camp-On was unsuccessful due to other limitations, then Priority Override is also restricted.	A receives busy tone.
2b	b) A performs a recall and dials OVRD or EOVR FFC to attempt Priority Override.	A receives overflow (fast busy) tone.

Example 2-Enhanced Override with a Meridian 1 proprietary telephone

With automatic Forced Camp-On turned off; response to AFCO in LD 15 was "NO".

Table 7
Example of Enhanced Override with a proprietary telephone with AFCO turned off.

STEP	ACTION	RESPONSE
1	B and C are connected in a simple call.	
2	E dials B.	E receives busy tone.
3	E presses OVR key to attempt Priority Override.	If telephone B or C has disconnected, telephone E receives overflow (fast busy) tone. Otherwise, a conference is established between E, B, and C with Override tone given.
	-or-	
3a	E presses EOVR key to attempt Forced Camp-On.	If telephone B or C has disconnected, telephone E receives overflow (fast busy) tone. Otherwise, B receives Camp-On tone and E receives ringback or busy tone depending on the options equipped. E is manually forced camped on to B.
3b	B disconnects from the call.	Telephone E rings telephone B.
	-or-	
3b	E presses EOVR key to attempt Priority Override.	If telephone B or C has disconnected, telephone E receives overflow (fast busy) tone. Otherwise, a conference is established between E, B, and C with Override tone given.
4	If any party disconnects...	A simple two-party call is established.

Copyright © 1994–2007, Nortel Networks
Nortel Networks Confidential

With automatic Forced Camp-On turned on; response to AFCO in LD 15 was "YES".

Table 8
Example of Enhanced Override with a proprietary telephone with AFCA turned on.

STEP	ACTION	RESPONSE
1	B and C are connected in a simple call.	
2	E dials B.	E attempts Forced Camp-On to B.
2a	If Forced Camp-On was successful...	E receives ringback or busy tone depending on the options equipped. E is automatically forced camped on to B.
2b	B disconnects.	E rings B.
	–or–	
2a	E presses OVR or EOVR key to attempt Priority Override.	If telephone B or C has disconnected, telephone E receives overflow (fast busy) tone. Otherwise, a conference is established between E, B, and C with Override tone given.
	-or-	
2a	If Forced Camp-On was unsuccessful due to Class of Service restrictions...	E receives busy tone.
2b	E presses OVR or EOVR key to attempt Priority Override.	If telephone B or C has disconnected, telephone E receives overflow (fast busy) tone. Otherwise, a conference is established between E, B, and C with Override tone given.
	-or-	
2a	If Forced Camp-On was unsuccessful due to other limitations, Priority Override is also restricted.	E receives busy tone.
2b	E presses OVR or EOVR key to attempt Priority Override.	A receives overflow (fast busy) tone.

Copyright © 1994–2007, Nortel Networks
Nortel Networks Confidential

Example 3-Enhanced Override from a consultation call with an analog (500/2500-type) telephone

With automatic Forced Camp-On turned off; Response to AFCO in LD 15 was "NO"; Station-to-Station Camp-On is denied or Station-to-Station Camp-On is equipped and D is a station; Multi-Party Operation is active.

Table 9
Example of Enhanced Override with an analog telephone with AFCO turned off

STEP	ACTION	RESPONSE
1	A is connected to D and B and C are connected in a simple call.	
2	A performs a recall.	A receives special dial tone (SDT). D is held.
3	A dials B.	A receives busy tone.
4	A releases.	Treated as misoperation of call transfer.
	-or-	
4a	A performs a recall and dials any control digit.	A releases from B and returns to D.
	-or-	
4a	A performs a recall.	A receives control dial tone.
4b	A dials OVRD FFC to attempt Priority Override.	Conference is established between A, B, and C with override tone given.
	-or-	
4a	A performs a recall.	A receives control dial tone.
4b	A dials EOVR FFC to attempt Forced Camp-On.	B receives Camp-On tone. A receives ringback or busy tone depending on the options equipped. A is manually forced camped on to B.
	– if –	
4c	A releases...	D is camped on to B.
	– if –	
4c	B disconnects.	A rings B.
	– if –	
4c	A performs a recall and dials any control digit.	A releases from B and returns to D.

Copyright © 1994–2007, Nortel Networks
Nortel Networks Confidential

STEP	ACTION	RESPONSE
	– if –	
	A performs a recall and dials the POVR FFC again.	If telephone B or C has disconnected, telephone A receives overflow (fast busy) tone. Otherwise, a conference is established between A, B, and C with Override tone given.

With automatic Forced Camp-On turned off; response to AFCO in LD 15 was "YES"; Station-to-Station Camp-On is allowed and D is an external call; Multi-Party Operation active.

Table 10
Example of Enhanced Override with an analog telephone with AFCO turned off.

STEP	ACTION	RESPONSE
1	A is connected to D and B and C are connected in a simple call.	
2	A performs a recall.	A receives special dial tone (SDT). D is put on hold.
3	A dials B.	B receives Camp-On tone. A receives ringback or busy tone depending on the options equipped. A is automatically forced camped on to B.
4	A releases.	D is camped on to B.
	-or-	
	B disconnects	A rings B.
	-or-	
	A performs a recall and dials any control digit.	A releases from B and returns to D.
	-or-	
4a	A performs a recall.	A receives control dial tone.
4b	A dials OVRD or EOVR to attempt Priority Override.	If telephone B or C has disconnected, telephone A receives overflow (fast busy) tone. Otherwise, a conference is established between A, B, and C with Override tone given.

Copyright © 1994–2007, Nortel Networks
Nortel Networks Confidential

Example 4-Enhanced Override from a consultation call with a Meridian 1 proprietary telephone

With Automatic Forced Camp-On turned off; Response to AFCO in LD 15 was "NO"; Station-to-Station Camp-On is denied or Station-to-Station Camp-On is equipped and D is a station; Multi-Party Operation active.

Table 11
Example of Enhanced Override from a consultation call with a proprietary telephone. AFLO is turned off.

STEP	ACTION	RESPONSE
1	E is connected to D and B and C are connected in a simple call.	
2	E presses Conference or Transfer key.	E receives dial tone. D is put on hold.
3	E dials B.	E receives busy tone.
4	E releases or presses Conference or Transfer key again.	Treated as misoperation of call transfer.
	-or-	
	E presses the DN key that D is held on.	E is reestablished with D.
	-or-	
	E presses OVR key to attempt Priority Override.	Conference is established between E, B, and C with Override tone given.
	-or-	
4a	E presses EOVR key.	B receives Camp-On tone. E receives ringback or busy tone depending on the options equipped. E is manually forced camped on to B.
	– if –	
4b	E presses Transfer key.	D is camped on to B.
	– if –	
4b	B disconnects.	E rings B.
	– if –	
4b	E releases.	Camp-On is cancelled and E must press DN key to reconnect to D.
	– if –	
4b	E presses Conference or Hold key.	Key operation is ignored.
	– if –	
4b	E presses the DN key that D is held on.	E is reestablished with D.

Copyright © 1994–2007, Nortel Networks
Nortel Networks Confidential

STEP	ACTION	RESPONSE
	– if –	
4b	E presses EOVR key again.	If telephone B or C has disconnected, telephone E receives overflow (fast busy) tone. Otherwise, a conference is established between E, B, and C with Override tone given.

With Automatic Forced Camp-On turned off; response to AFCO in LD 15 was "YES"; Station-to-Station Camp-On is allowed and D is an external call; Multi-Party Operation active.

Table 12
Example of Enhanced Override with proprietary telephone with AFCO turned off.

STEP	ACTION	RESPONSE
1	E is connected to D and B and C are connected in a simple call.	
2	E presses Conference or Transfer key.	E receives dial tone. D on hold.
3	E dials B.	E receives ringback or busy tone depending on the options equipped. E is automatically Forced Camped on to B.
4	E presses Transfer key.	D is camped on to B.
	-or-	
	B disconnects.	E rings B.
	-or-	
	E releases.	Camp-On is canceled and E must press DN key to reconnect to D.
	-or-	
	E presses Conference or Hold key.	Key operation is ignored.
	-or-	
	E presses the DN key that D is held on.	E is reestablished with D.
	-or-	
	E presses EOVR or OVR key to attempt Priority Override.	If telephone B or C has disconnected, telephone E receives overflow (fast busy) tone. Otherwise, a conference is established between E, B, and C with Override tone given.

Copyright © 1994–2007, Nortel Networks
Nortel Networks Confidential

Operation with various combinations of Forced Camp-On and Priority Override

The following tables show what happens when either Forced Camp-On or Priority Override are denied.

Forced Camp-On is denied by the new Camp-On From Another Telephone Denied (CPFD) and Camp-On To Another Telephone Denied (CPTD) Classes of Service.

Priority Override is denied for analog (500/2500-type) telephones by setting the Override Denied (OVRD) Class of Service, or for all telephones by setting their Priority Override Levels (PLEV) to 0.

Both Forced Camp-On and Priority Override are denied by the Warning Tone Denied (WTD) Class of Service, or if any of the limitations described in the Operating parameters or Feature interactions section is encountered.

The following table highlights the various combinations and the results of different actions for a simple call.

Table 13
Example of the results of various combinations of simple calls.

Setup						
AFCO setting in LD 15	NO	NO	NO	YES	YES	YES
Forced Camp-On Allowed	NO	NO	YES	NO	NO	YES
Priority Override Allowed	YES	NO	NO	YES	NO	NO
Action	**Result**					
A dials B B is busy	BT	BT	BT	BT	BT	BT or R
A recalls analog (500/2500-type) telephones only	SDT	SDT	SDT	SDT	SDT	SDT
A uses OVR key or OVRD FFC	POVR	O&L	O&L	POVR	O&L	BT or R
OR A uses EOVR key or FFC	BT	BT	BT or R	POVR	BT	BT or R
A uses EOVR key or FFC again	POVR	O&L	BT or R	POVR	O&L	BT or R

Legend:
BT – Busy tone returned to A.
BT or R – Busy tone or ringback returned to A; A camped on to B.
O&L – Overflow (fast busy) returned to A for 30 seconds, then A is locked out.

Copyright © 1994–2007, Nortel Networks
Nortel Networks Confidential

POVR – Priority Override is attempted.
SDT – Special dial tone is returned to A.

The following table highlights the various combinations and the results of different actions for a consultation call.

Table 14
Example of the results of various combinations of consultation calls.

Setup						
AFCO setting in LD 15	NO	NO	NO	YES	YES	YES
Forced Camp-On Allowed	NO	NO	YES	NO	NO	YES
Priority Override Allowed	YES	NO	NO	YES	NO	NO
Action	**Result**					
A connected to D A recalls analog (500/2500-type) telephones only	SDT	SDT	SDT	SDT	SDT	SDT
A dials B D is held. B is busy.	BT	BT	BT	BT	BT	BT or R
A recalls analog (500/2500-type) telephones only	CDT	CDT	CDT	CDT	CDT	CDT
A uses OVR key or OVRD FFC	POVR	O&R	O&R	POVR	O&R	BT or R
OR A uses EOVR key or FFC	BT	BT	BT or R	POVR	BT	BT or R
A uses EOVR key or FFC again	POVR	O&R	BT or R	POVR	O&R	BT or R
A recalls analog (500/2500-type) telephones only	CDT	REC	CDT	CDT	REC	CDT
OR A presses DN key on which D is held	REC	REC	REC	REC	REC	REC

Legend:
BT – Busy tone returned to A.
BT or R – Busy tone or ringback returned to A; A camped on to B.
CDT – Control dial tone returned to A.
O&R – Overflow (fast busy) returned to A for 30 seconds, then A is reconnected to D.
POVR – Priority Override is attempted.
SDT – Special dial tone is returned to A; D is held.

Copyright © 1994–2007, Nortel Networks
Nortel Networks Confidential

If at any time invalid digits are dialed for the EOVR or OVRD FFC, overflow (fast busy) tone is returned to the telephone attempting to override. This telephone receives overflow (fast busy) tone for 30 seconds and is then locked out or reconnected to the telephone on hold. If the attempted override is made from a consultation call, the telephone may perform a recall during overflow (fast busy) tone, and return to the call being held.

Enhanced Override from a conference call with any telephone

Once a consultation conference (that is, party D is still on hold) has been established between telephone A or E and parties B and C, any of the following may occur.

Table 15
Example of Enhanced Override from a conference call.

ACTION	RESPONSE
Telephone B or C disconnects.	Telephone A or E remains in simple two party consultation with remaining telephone (B or C).
– or –	
Telephone A performs a recall and dials a control digit.	Multi-Party operation for control digit is dialed.
– or –	
Telephones B and C disconnect.	Telephone A or E may automatically be returned to telephone D or may have to perform a recall, depending on Class of Service (AO6/C6A and XFA). Override tone is removed.
– or –	
Telephone A disconnects or telephone E presses Transfer or Conference key.	D is transferred into the conference with B and C. Override tone is removed.
– or –	
Telephone E disconnects.	Telephones B and D remain connected. Telephone D is treated as in the case of misoperation of call transfer. Override tone is removed.

Copyright © 1994–2007, Nortel Networks
Nortel Networks Confidential

Override, Priority

Contents

This section contains information on the following topics:

"Feature description" (page 259)

"Operating parameters" (page 260)

"Feature interactions" (page 261)

"Feature packaging" (page 262)

"Feature implementation" (page 263)

"Feature operation" (page 266)

Feature description

The Priority Override feature allows users to break in to an established connection. To do this, analog (500/2500-type) telephone users enter the Override Flexible Feature Code (OVRD FFC), and proprietary telephone users use the Override (OVR) key.

Priority Override can be used as a feature by itself or in conjunction with Forced Camp-On. The combination of the two features is referred to as Enhanced Override (EOVR).

For Priority Override the overriding telephone must have a Priority Override Level (PLEV) that is greater than or equal to the PLEV of the telephone or trunk to be overridden.

For an analog (500/2500-type) telephone, a recall followed by dialing of the Priority Override FFC (OVRD FFC with Priority Override package 186 equipped) breaks into the connection and establishes a conference between all three parties. For a proprietary telephone, the OVR key is used in place of the FFC.

Copyright © 1994–2007, Nortel Networks
Nortel Networks Confidential

For Priority Override to be allowed, all telephones and trunks involved must have Warning Tone Allowed (WTA) Class of Service. Each telephone and trunk route (TIE, DID, and COT) is assigned a PLEV value:

Table 16
Priority Override Level Indication Assignments

PLEV	Indication
0	This telephone or route cannot be overridden. If assigned to a telephone, the telephone cannot use Override.
1	This telephone or route can be overridden. If assigned to a telephone, the telephone cannot use Override.
2	This telephone or route can be overridden by telephones assigned level 2 through level 7. If assigned to a telephone, the telephone can override level 1 and level 2.
3-6	(Similar to level 2) This telephone or route can be overridden by telephones assigned an equal or higher level. If assigned to a telephone, the telephone can override telephones assigned an equal or lower level, except level 0.
7	This telephone or route can be overridden by another level 7 telephone only. If assigned to a telephone, the telephone can override level 1 through level 7.

Operating parameters

Flexible Feature Codes (FFC) package 139 must be equipped for Priority Override to be available to analog (500/2500-type) telephones.

For analog (500/2500-type) telephone activation, Multi-Party Operations (MPO) package 141 must be equipped. Responsed with "YES" to the RALL prompt in LD 15 to ensure register recalls are required before dialing control digits. The OVRD FFC defined must not start with the same digit as one of the control digits. The control digits are defined in Overlay and are printed as part of the Customer Data Block (LD 21).

If Priority Override is equipped, it replaces Override when the OVR key or OVRD FFC is used. However, Override can be simulated by using the default value, 2, for all trunk routes and telephones.

Telephones or trunks involved in any of the following cannot be overridden:

- Non-established call
- Conference call
- Attendant call
- Attendant call using Centralized Attendant Service (CAS), Primary Rate Access (PRA), or Integrated Services Digital Network (ISDN) trunk
- Make Set Busy

Copyright © 1994–2007, Nortel Networks
Nortel Networks Confidential

- Do Not Disturb
- Automatic Call Distribution (ACD) call
- Operator Call Back
- Hold
- Data call
- Release Link call, and
- Parked call.

Priority Override is not allowed on analog (500/2500-type) telephones unless the Override Allowed (OVDA) Class of Service is defined. This Class of Service is also used for Override.

Trunks cannot perform Priority Override. They also cannot be overridden unless they are the unwanted party of a connection. It is for this exception that trunks are given a Priority Level.

Feature interactions

Attendant calls

Telephones involved in attendant calls cannot be Priority Overridden. Overflow (fast busy) tone is returned to telephones attempting Priority Override.

Automatic Call Distribution (ACD)

Telephones involved in ACD calls cannot be Priority Overridden. Overflow (fast busy) tone is returned to telephones attempting Priority Override.

Conference calls

Telephones involved in Conference calls cannot be Priority Overridden. Overflow (fast busy) tone is returned to telephones attempting Priority Override.

Data calls

Data calls have Warning Tone Denied (WTD) Class of Service, and therefore cannot be Priority Overridden. Overflow (fast busy) tone is returned to telephones attempting Priority Override.

Digit display

The Digit Display of the telephones being overridden changes to the Directory Number (DN) of the telephone overriding once Priority Override is accomplished.

Copyright © 1994–2007, Nortel Networks
Nortel Networks Confidential

Do Not Disturb (DND)

Telephones with DND enabled cannot be Priority Overridden. Overflow (fast busy) tone is returned to telephones attempting Priority Override.

Hold

Neither held calls, nor telephones with calls on hold can be Priority Overridden. Overflow (fast busy) tone is returned to telephones attempting Priority Override.

Make Set Busy (MSB)

Telephones with MSB active cannot be Priority Overridden. Overflow (fast busy) tone is returned to telephones attempting Priority Override.

Multi-Party Operations (MPO)

With Priority Override (POVR) equipped, there is a slight change in Multi-Party Operations functionality. When a consultation call is made without POVR equipped, and the telephone being called is busy, a recall returns to the party on hold without dialing a control digit. However, if POVR is equipped, a control digit must be dialed. Any control digit releases the busy call and returns to the call on hold.

Operator Call Back

Telephones involved in an Operator Call Back call or Toll Operator Break in cannot be Priority Overridden. Overflow (fast busy) tone is returned to telephones attempting Priority Override.

Override

If Priority Override is equipped, it replaces Override when using the OVR key or OVRD FFC. However, Override can be simulated by using the default PLEV, 2, for all trunk routes and telephones.

Ring Again

Ring Again (RGA) is the only other feature currently available once a busy telephone has been encountered. RGA is not allowed on an analog (500/2500-type) telephone making a Multi-Party Operations consultation call.

Feature packaging

The Priority Override (POVR) feature is packaged under package 186. To provide all the capabilities described in this document, Flexible Feature Codes (FFC) package 139 should also be equipped.

Copyright © 1994–2007, Nortel Networks
Nortel Networks Confidential

Feature implementation

Task summary list

The following is a summary of the tasks in this section:

1. "LD 57" (page 263)

   Configure Priority Override FFC at the CODE prompt.

2. "LD 10" (page 263)

   Configure Analog (500/2500-type) telephones for Priority Override.

3. "LD 11" (page 264)

   Enter Priority Override levels and define override keys.

4. "LD 16" (page 265)

   Configure Route for Priority Override.

5. "LD 14" (page 266)

   Configure trunks for Priority Override warning tones.

LD 57

Prompt	Response	Description
REQ	NEW, CHG	Add, or change.
TYPE	FFC	Flexible Feature Codes.
...		
CODE	OVRD	Change Override access code. OVRD is used for Priority Override when the Priority Override POVR package 186 is equipped.
OVRD	xxxx	Override access code.

LD 10

Prompt	Response	Description
REQ:	NEW CHG	Add, or change.
TYPE:		Type of telephone.
	500	analog (500/2500-type) telephone.
...		
CLS		Class of Service.
	OVDA	Override Allowed.
	WTA	Warning Tone Allowed.

Copyright © 1994–2007, Nortel Networks
Nortel Networks Confidential

Prompt	Response	Description
...		
PLEV	0-(2)-7	Priority Override Level. 0 Indicates that this telephone cannot be overridden or override. 1 Indicates that this telephone can be overridden but cannot override. 2 Indicates that this telephone can be overridden by telephones assigned level 2 through level 7 and that the telephone can override level 1 and level 2. 3-6 Similar to level 2, indicates that this telephone can be overridden by telephones assigned an equal or higher level and that it can override lesser than and equal to levels, except level 0. 7 Indicates that this telephone can be overridden by another level 7 telephone only and that it can override level 1 through level 7.

LD 11

Prompt	Response	Description
REQ:	NEW CHG	Add, or change.
TYPE:	a...a	Telephone type. Type **?** for a list of possible responses.
...		
CLS		Class of Service.
	WTA	Warning Tone Allowed.
...		

Copyright © 1994–2007, Nortel Networks
Nortel Networks Confidential

Prompt	Response	Description
PLEV	0-(2)-7	Priority Override Level. 0 Indicates that this telephone cannot be overridden or override. 1 Indicates that this telephone can be overridden but cannot override. 2 Indicates that this telephone can be overridden by telephones assigned level 2 through level 7 and that the telephone can override level 1 and level 2. 3-6 Similar to level 2, indicates that this telephone can be overridden by telephones assigned an equal or higher level and that it can override lesser than and equal to levels, except level 0. 7 Indicates that this telephone can be overridden by another level 7 telephone only and that it can override level 1 through level 7.
...		
KEY		Define keys.
	xx OVR	Override (If Priority Override [POVR] package 186 is equipped, the OVR key is used for Priority Override.)

LD 16

Prompt	Response	Description
REQ	NEW CHG	Add, or change.
TYPE	RDB	Route Data Block.
...		
PLEV	0-(2)-7	Priority Override Level 0 Cannot be overridden. 1-7 Can be overridden by a telephone with a Priority Level which is equal to or greater than the level assigned to this route. Trunks cannot override, but the levels of all parties in a connection are examined to determine if the connection may be overridden.

Copyright © 1994–2007, Nortel Networks
Nortel Networks Confidential

Prompt	Response	Description

LD 14

Prompt	Response	Description
REQ	NEW CHG	Add, or change.
...		
CLS		Class of Service.
	WTA	Warning Tone Allowed.

Feature operation

Priority Override can be used when making either a simple or consultation call (that is, have a call on hold while calling another party). The following feature operation descriptions use telephone A (an analog (500/2500-type) telephone) or telephone E (a proprietary telephone) to call telephone B, which is connected to party C.

The telephones are configured as follows:

- Telephone A is an analog (500/2500-type) telephone with Warning Tone Allowed (WTA) and Override Allowed (OVDA) Classes of Service.
- Telephone B has Warning Tone Allowed (WTA) Class of Service.
- Party C has Warning Tone Allowed (WTA) Class of Service and can be any telephone type or a Direct Inward Dial (DID), TIE, or Central Office (Public Exchange) (COT) trunk.
- Telephone E is a proprietary telephone with Warning Tone Allowed (WTA) Class of Service and an Override (OVR) key equipped.

For the following descriptions:

- Telephones A and E have a Priority Override Level (PLEV) of greater than 1.
- Telephone B and party C both have PLEVs greater than 0, but less than or equal to those of telephones A and E.
- Both telephone B and party C are involved in a simple call, not a conference call.
- Call Forward, Hunting, and Call Waiting are not in use.

Copyright © 1994–2007, Nortel Networks
Nortel Networks Confidential

In the following feature operation descriptions the term "recall" refers to performing a register recall, which can be performed in a number of different ways. Some typical examples are:

- Flash the switchhook (the equivalent of hanging up the handset and picking it back up, this on hook, off hook is performed in a time period that is less than what the system would consider to be a valid disconnect).
- Press the flash or LINK button if equipped.

The Override tone is always provided for Priority Override because Warning Tone Allowed (WTA) Class of Service is a prerequisite. The Override tone used is the same tone as used for Override. The tone is defined in response to the OVRD prompt in LD 56.

Override will take place on any established call when the Flexible Feature Code (FFC) is dialed or the Override (OVR) key is depressed. That means if telephone A calls telephone B while telephone B is busy, and telephone B disconnects from that call and is established on another call when telephone A activates Override, the new call will be overridden.

Table 17
POVR with an Analog (500/2500-type) telephone

STEP	ACTION	RESPONSE
1	B and C are connected in a simple call.	
2	A dials B.	A receives busy tone.
3	A performs a recall.	A receives special dial tone (SDT).
4	A dials OVRD FFC to attempt Priority Override.	If telephone B or C has disconnected, telephone A receives overflow (fast busy) tone. Otherwise, a conference is established between A, B, and C with Override tone given.

Table 18
POVR with a proprietary telephone

STEP	ACTION	RESPONSE
1	B and C are connected in a simple call.	

Copyright © 1994–2007, Nortel Networks
Nortel Networks Confidential

STEP	ACTION	RESPONSE
2	E dials B.	E receives busy tone.
3	E presses OVR key to attempt Priority Override.	If telephone B or C has disconnected, telephone E receives overflow (fast busy) tone. Otherwise, a conference is established between E, B, and C with Override tone given.

Copyright © 1994–2007, Nortel Networks
Nortel Networks Confidential

Paging

Contents

This section contains information on the following topics:

"Feature description" (page 269)

"Operating parameters" (page 270)

"Feature interactions" (page 270)

"Feature packaging" (page 271)

"Feature implementation" (page 271)

"Feature operation" (page 274)

Feature description

The system provides switching access and trunk circuit interface to a customer-supplied speaker or radio paging equipment. Paging equipment is accessed by dial access or a Page key on attendant consoles. Telephones cannot be assigned a Page key and must dial access this feature.

Attendant consoles using the Page key preempt telephones having only dial access. Telephones preempted by the attendant are disconnected and must re-access the paging trunk.

Time Forced Disconnect (TFD), provides a variable timer to force disconnect Paging trunks. The timer is defined on a route basis to limit the time a user can keep a Paging trunk seized. When the timer expires, the call is disconnected from the trunk. The trunk is disconnected when the Time Forced Disconnect (TFD) timer expires in all cases, regardless of the status of the trunk at the time. Timing starts as soon as the trunk is seized (not when the call is established), so the timer must allow some delay for connection time.

Copyright © 1994–2007, Nortel Networks
Nortel Networks Confidential

The Time Forced Disconnect timer is used on the following trunk types:

- COT Central Office
- DIC Dictation
- FEX Foreign Exchange
- PAG Paging trunks
- TIE Tie direct lines
- WAT Wide Area Telephone Service

Operating parameters

Station dial access to the Paging trunk is restricted by the Trunk Group Access Restriction (TGAR) code entered in LD 10 or LD 11.

Unique access codes are required for each Paging route.

Unique feature keys are assigned for each Paging route.

All Zone Paging is not available with the system, unless the customer-provided paging equipment is equipped with separate "all-zone" input.

The following requirements apply to Time Forced Disconnect (TFD) feature:

- The timer can only be assigned on a route basis and not to individual trunks. All trunks in a route have the same timer value.
- After a timer value is changed, it does not take effect on a given trunk until that trunk is released and seized again.
- Changing a timer value to zero (0) effectively removes the TFD timer from all the trunks in that route.
- The range of the timer is one hour, in 30-second increments (0–3600). The TFD timer is independent of all other timers.

Trunks forced off by TFD are disconnected normally, accompanied by an error message (ERR4054) output on the system terminal. The error message identifies the Originating Terminal Number (TN), Terminating Terminal Number (TN), date, and time for the following trunk types:

- Analog trunks
- Digital Trunk Interface (DTI) trunks, and
- ISDN Integrated Service Links (ISL)/Primary Rate Interface (PRI) trunks.

Feature interactions

Call Forward All Calls

Calls that originate on a TIE trunk to a telephone that is redirected to a paging route are blocked.

Copyright © 1994–2007, Nortel Networks Nortel Networks Confidential

Conference

Paging trunks cannot be used in a conference call.

Multi-Party Operations

Users of analog (500/2500-type) telephones cannot make a consultation call while connected to a paging trunk.

Private Line Routes

Route 31 can be assigned as a paging route.

Feature packaging

This feature is included in base system software.

Feature implementation

Task summary list

The following is a summary of the tasks in this section.

1. "LD 16" (page 271)

   Add or change a Paging trunk route access code and restriction group numbers.

2. "LD 16 " (page 272)

   Define the timer for the Time Forced Disconnect feature.

3. "LD 14" (page 272)

   Add or change a Paging trunk within the Paging trunk route.

4. "LD 12" (page 273)

   Assign Paging key for an attendant console. No programming is required to allow the attendant dial access to Paging.

5. "LD 10" (page 273)

   Allow or deny dial access to Paging for analog (500/2500-type) telephones.

6. "LD 11" (page 274)

   Allow or deny dial access to Paging for Meridian 1 proprietary telephones.

LD 16

Prompt	Response	Description
REQ	CHG	Change.
TYPE	RDB	Route Data Block.
CUST	xx	Customer number, as defined in LD 15

Copyright © 1994–2007, Nortel Networks
Nortel Networks Confidential

Prompt	Response	Description
ROUT		Route number
	0-511	Range for Large System and CS 1000E system.
	0-127	Range for Small System and Media Gateway 1000B.
TKTP	PAG	Paging trunk route.
ICOG	OGT	Outgoing trunk.
ACOD	xxx...x	Trunk route access code (if the Directory Number Expansion package is equipped, this access code can have up to seven digits).
TARG	1-31	Trunk access restriction group number.

LD 16

Prompt	Response	Description
REQ	CHG	Change.
TYPE	RDB	Route Data Block.
CUST	xx	Customer number, as defined in LD 15
ROUT		Route number
	0-511	Range for Large System and CS 1000E system.
	0-127	Range for Small System and Media Gateway 1000B.
CNTL	(NO) YES	Changes to controls or timers (default is NO).
TIMR	TFD xxxx	TFD timer, where: xxxx = 0-(30)-3600 seconds, in 30-second increments.

LD 14

Prompt	Response	Description
REQ	CHG	Change.
TYPE	PAG	Paging trunk.
TN		Terminal number
	l s c u	Format for Large System and CS 1000E system, where l = loop, s = shelf, c = card, u = unit.
	c u	Format for Small System and Media Gateway 1000B where c = card and u = unit.
XTRK	XUT XEM	Universal Trunk Card (NT8D14), E&M Trunk Card (NT8D15). Prompted only for superloops and the first unit on the card.
CUST	xx	Customer number, as defined in LD 15

Copyright © 1994–2007, Nortel Networks
Nortel Networks Confidential

Prompt	Response	Description
SIGL	DX2 DX4 EAM EM4 LDR OAD	DX signaling (two-wire) – QPC71 only. DX signaling (four-wire) – QPC71 and NT8D15. E&M signaling (two-wire) – QPC71 and NT8D15. E&M signaling (four-wire) – QPC71 and NT8D15. Loop dial repeating – QPC71 and NT8D14/15. Outgoing automatic, incoming dial – QPC71, NT8D14/15.
STRO	IMM WNK DDL	Immediate start outgoing. Wink start outgoing. Delay dial outgoing.
SUPN	(NO) YES	Answer and disconnect supervision required.

LD 12

Prompt	Response	Description
REQ	CHG	Change.
TYPE	2250	Attendant console type.
TN		Terminal number
	l s c u	Format for Large System and CS 1000E system, where l = loop, s = shelf, c = card, u = unit.
	c u	Format for Small System and Media Gateway 1000B where c = card and u = unit.
KEY	xx PAG yyy...y	Paging key, where: xx = key number (0-19 on M2250), and yy...y = access code of Paging trunk route.

LD 10

Prompt	Response	Description
REQ:	CHG	Change.
TYPE:	500	Telephone type.
TN		Terminal number
	l s c u	Format for Large System and CS 1000E system, where l = loop, s = shelf, c = card, u = unit.

Copyright © 1994–2007, Nortel Networks
Nortel Networks Confidential

Prompt	Response	Description
	c u	Format for Small System and Media Gateway 1000B where c = card and u = unit.
TGAR	xx	Allow/deny access to Paging trunk.

LD 11

Prompt	Response	Description
REQ:	CHG	Change.
TYPE:	a...a	Telephone type. Type **?** for a list of possible responses.
TN		Terminal number
	l s c u	Format for Large System and CS 1000E system, where l = loop, s = shelf, c = card, u = unit.
	c u	Format for Small System and Media Gateway 1000B where c = card and u = unit.
TGAR	xx	Allow/deny access to Paging trunk.

Feature operation

No specific operating procedures are required to use this feature.

Copyright © 1994–2007, Nortel Networks
Nortel Networks Confidential

Partial Dial Timing

Contents

This section contains information on the following topics:

"Feature description" (page 275)

"Operating parameters" (page 276)

"Feature interactions" (page 276)

"Feature packaging" (page 276)

"Feature implementation" (page 276)

"Feature operation" (page 276)

Feature description

This feature allows a partial dial timer to be associated with a Direct Inward Dialing (DID) route. The End-of-dialing timer is used for partial dial timing. It is defined on a route basis and has a range from 128 to 32640 milliseconds, in increments of 128 milliseconds.

The partial dial timer is started each time that a digit is expected. If the timer expires before a complete DN is dialed, the call is given treatments as shown in Table 19 "Treatment of calls upon expiration of dial timer" (page 275).

The Partial Dial Timing feature can be used with the End of Selection and End of Selection Busy features.

Table 19
Treatment of calls upon expiration of dial timer

PRDL EOS	NO	YES	BSY
NO	N/A	Call ATTN	Overflow tone

Copyright © 1994–2007, Nortel Networks
Nortel Networks Confidential

PRDL EOS	NO	YES	BSY
YES	N/A	EOS signal Call ATTN	EOS signal Overflow tone
BSY	N/A	EOS, EOSB signals Overflow tone	EOS/EOSB signals Overflow tone

Operating parameters

The Public Exchange/Central Office must be equipped to handle the special signaling requirements associated with the Partial Dial Timing feature described above.

The Partial Dial Timing feature is not available on 1.5 Mbit digital trunks or Japanese Digital Multiplex Interface (DMI) trunks.

The Partial Dial feature is not supported by R2 Multifrequency Compelled Signaling.

Feature interactions

There are no feature interactions associated with this feature.

Feature packaging

This feature is packaged under International Supplementary Features (SUPP) package 131.

Feature implementation

LD 16 - Create or modify partial dial timing for trunk routes.

Prompt	Response	Description
...		
PRDL	(NO) YES BSY	No partial dial timing on DID route, Partial dial timing is equipped using EOD, or Partial Dial timing is equipped using EOD; BSY signal is sent on time out.

Feature operation

No specific operating procedures are required to use this feature.

Copyright © 1994–2007, Nortel Networks
Nortel Networks Confidential

Periodic Camp-on Tone

Contents

This section contains information on the following topics:

"Feature description" (page 277)

"Operating parameters" (page 277)

"Feature interactions" (page 277)

"Feature packaging" (page 278)

"Feature implementation" (page 278)

"Feature operation" (page 279)

Feature description

This feature replaces the single buzz or burst of tone for Meridian 1 proprietary telephones, given to indicate a camped-on call, with periodic bursts of buzz or tone. The buzz or tone can be defined on a customer basis.

The Periodic Camp-On Tone applies to calls camped-on by an attendant in standalone and Integrated Services Digital Network (ISDN) environments, and camped-on from inquiry calls in standalone environments.

Operating parameters

There are no operating parameters associated with this feature.

Feature interactions

Attendant Break-In, Attendant Busy Verify, Override

The Periodic Camp-On Tone has precedence over Break-In, Busy Verify, and Override intrusion tones.

Copyright © 1994–2007, Nortel Networks
Nortel Networks Confidential

Semi-Automatic Camp-On

Periodic Camp-On Tone stops when the camped-on call is recalled to the attendant.

Feature packaging

This feature is packaged under International Supplementary Features (SUPP) package 131.

Dependency:

- Flexible Tones and Cadences (FTC) package 125

Feature implementation

Task summary list

The following is a summary of the tasks in this section:

1. "LD 56" (page 278)

   Define a new cadence in the Master Cadence Table (if required).

2. "LD 56" (page 279)

   Assign a cadence, either new or existing, to the Camp-On tone.

A tone with a periodic cadence must be defined for the Camp-On feature. An existing periodic cadence may be chosen from the Master Cadence Table, or a new cadence may be defined specifically for the Camp-On tone.

LD 56

Prompt	Response	Description
...		
TYPE	MCAD	Master Cadence data block.
WCAD	0-225	Cadence Number to be given the new definition. Cadence number 0 is reserved for continuous tone and is not changeable.
CDNC	xxxx xxxx ... xxxx	Cadence. On-off phases for Cadence (ten off-on cycles). Entries 1 through 15 are reserved for ringing cadences. When defining the cadences in MCAD, each phase is entered in 5 millisecond increments. The first number defines the length of the first on period. The second defines the length of the first off period. The third defines the length of the second on period, and so forth.

Copyright © 1994–2007, Nortel Networks
Nortel Networks Confidential

Prompt	Response	Description
		The range of the first phase is 1-9999 increments. The range of the second phase is 0-9999 increments. The default is 0 0 0 0 0 0 0 0 0 0.

LD 56

Prompt	Response	Description
...		
TYPE	FTC	Flexible Tones and Cadence data block.
CDNC	xxxx ... xxxx	The cadence number of the existing cadence, or the cadence number given to the newly defined cadence.
...		
SCCT	(NO) YES	Software Controlled Cadences and Tones. Modification of the software controlled definitions allowed.
- CAMP		Camp-On tone.
- - TDSH	i bb c tt	Tone definition for systems equipped with Tone and Digit cards, where: i = internal (0), or external (1) source bb = burst cc = cadence, and tt = frequency. Prompts with the response i bb c tt define the internal/external source, burst, cadence and frequency/level respectively. Enter the decimal equivalent (0-15) of the TDS Hex code. The first field is usually 0. If an external source is used, the entry is 1 and the fourth field is 0-7 for the specified channel.
- - XTON	0-255	XCT tone code.

Feature operation

No specific operating procedures are required to use this feature.

Copyright © 1994–2007, Nortel Networks
Nortel Networks Confidential

Copyright © 1994–2007, Nortel Networks
Nortel Networks Confidential

Periodic Clearing

Contents

This section contains information on the following topics:

"Feature description" (page 281)

"Operating parameters" (page 281)

"Feature interactions" (page 282)

"Feature packaging" (page 282)

"Feature implementation" (page 282)

"Feature operation" (page 282)

Feature description

The Periodic Clearing Signal (PCS) is used to disconnect calls that have been answered, but are now either ringing, held (consultation hold), parked (on hold without consultation), or camped-on (in the process of being transferred to a busy extension). These calls receive PCS pulses that will serve to disconnect the call if the caller has hung up. If the caller is still waiting, the line remains connected. The Periodic Clearing feature includes a Disconnect Timer (DCTI) that indicates the time period (in seconds) before a call is disconnected. The timer can be used to disconnect a call even if the periodic clearing is disabled.

Operating parameters

This feature applies only to 2 Mbit digital incoming Public Switched Telephone Network (PSTN) and Direct Inward Dialing (DID) calls.

Copyright © 1994–2007, Nortel Networks
Nortel Networks Confidential

Feature interactions

AC15 Recall: Timed Reminder Recall

When the Periodic Clearing feature is active the Disconnect timer will interfere with the AC15 recall timer. The Disconnect timer is activated on a TIE trunk or an incoming Direct Inward Dialing (DID) or Central Office (CO) trunk which is connected to the AC15 TIE trunk. If the Disconnect timer expires first the AC15 recall is cancelled and the trunk is disconnected. This is the case with a call which has been established with a TIE trunk or an incoming call on a DID or CO trunk that has been extended over an AC15 TIE trunk with the timed recall activated.

Generic XFCOT Software Support

Periodic Clearing is the sending of periodic signal from the system to a Central Office when an incoming call has been answered but is not in an established state (for instance, ringing, held, or parked). The connection is disconnected if the originator goes on-hook.

The Periodic Clearing condition is timed by the disconnect timer (DCTI) to prevent this situation from lasting for an extended time. When the DCTI timer expires the trunk is disconnected.

The Disconnect Timer can be used without having the feature Periodic Clearing configured particularly when the Central Office trunk has no disconnect supervision. It can be disabled by setting the DCTI to 0 in LD 16.

A loop start trunk can be marked as disconnect supervised. When it has a class of service providing disconnect supervision, in Periodic Clearing condition the trunk is disconnected when the calling station releases the call.

Feature packaging

This feature is packaged under International Supplementary Features (SUPP) package 131.

Feature implementation

LD 16 - Enable Periodic Clearing Signal for trunk routes at the PECL prompt.

Prompt	Response	Description
...		
PECL	(NO) YES	(Do not send) send Periodic Clearing signal.

Feature operation

No specific operating procedures are required to use this feature.

Copyright © 1994–2007, Nortel Networks
Nortel Networks Confidential

Periodic Clearing Enhancement

Contents

This section contains information on the following topics:

"Feature description" (page 283)

"Operating parameters" (page 283)

"Feature interactions" (page 284)

"Feature packaging" (page 284)

"Feature implementation" (page 284)

"Feature operation" (page 284)

Feature description

This feature permits the system to send a Periodic Clearing Signal (PCS) and/or start the Disconnect Timer (DCTI) on a TIE or TIE AUTO line, when a call is answered but not established to a station, and there is more than one analog (500/2500-type) telephone involved in the call.

The system can perform the following:

- Receive a PCS on a TIE trunk, then retransmit it to another TIE trunk or incoming 2.0 Mbps digital or analog Public Exchange/Central Office (CO) or Direct Inward Dialing (DID) trunk, and
- Start the DCTI for incoming Central Office or DID trunks.

Operating parameters

There are no operating parameters associated with this feature.

Copyright © 1994–2007, Nortel Networks
Nortel Networks Confidential

Feature interactions

Called Party Disconnect Control, Toll Operator Break-in

The Called Party Disconnect Control and Toll Operator Break-in can exist on the same system and function on the same routes, but are not to be used in conjunction with Periodic Clearing.

Feature packaging

This feature is packaged under International Supplementary Features (SUPP), package 131.

Feature implementation

LD 16 - Create or modify the length of ringing time allowed for trunk routes.

Prompt	Response	Description
...		
PECL	(NO) YES	(Do not send) send Periodic Clearing signal.
DCTI	(0)-511	The time (in seconds) an extension is allowed to ring or be on hold before the trunk is disconnected. 0 specifies disconnection will not occur.

Feature operation

No specific operating procedures are required to use this feature.

Copyright © 1994–2007, Nortel Networks
Nortel Networks Confidential

Periodic Clearing on RAN, Meridian Mail, ACD, and Music

Contents

This section contains information on the following topics:

"Feature description" (page 285)

"Operating parameters" (page 285)

"Feature interactions" (page 285)

"Feature packaging" (page 286)

"Feature implementation" (page 286)

"Feature operation" (page 286)

Feature description

This feature allows the periodic clearing signal to be sent in situations where an incoming call has been answered and connected to Meridian Mail, Automatic Call Distribution (ACD) queue, music, or a recorded announcement (including when the call has been forwarded to a pager, connected to Recorded Announcement (RAN), and placed in the pager queue). The periodic clearing signal is sent on incoming calls over Public Exchange/Central Office, Direct Inward Dialing (DID), TIE, 2.0 Mbps Primary Rate Interface (PRI2) TIE, and Integrated Services Digital Network Signaling Link (ISL) TIE trunks.

Operating parameters

There are no operating parameters associated with this feature.

Feature interactions

Called Party Disconnect Control

This feature is not supported if used together with Toll Operator Break-In.

Copyright © 1994–2007, Nortel Networks
Nortel Networks Confidential

Centrex Switchhook flash

This feature is not supported if used together with Centrex Switchhook flash.

Integrated Services Digital Network (ISDN) Basic Rate Interface

This feature is not supported on ISDN Basic Rate Interface.

MFC and MFE signaling

This feature is not supported if used on MFC and MFE signaling trunks.

Toll Operator Break-In

This feature is not supported if used together with Toll Operator Break-In.

Feature packaging

This feature is packaged under International Supplementary Features (SUPP) package 131; and Network Attendant Service (NAS) package 159.

Feature implementation

Task summary list

The following is a summary of the tasks in this section:

1. "LD 15" (page 286)

   Allow or deny Periodic Clearing on Meridian Mail for a customer.

2. "LD 23" (page 286)

   Configure Periodic Clearing on Meridian Mail.

LD 15

Prompt	Response	Description
REQ	NEW CHG	New, or change.
TYPE	FTR	Features and options.
...		
OPT	(PCMD) PCMA	Deny (the default) or allow Periodic Clearing on Meridian Mail.

LD 23

Prompt	Response	Description
...		
PCMM	(NO) YES	Deny (the default) or allow Periodic Clearing on Meridian Mail. Prompted only if OPT = PCMA in LD 15.

Feature operation

No specific operating procedures are required to use this feature.

Copyright © 1994–2007, Nortel Networks
Nortel Networks Confidential

Periodic Pulse Metering

Contents

This section contains information on the following topics:

"Feature description" (page 287)

"Operating parameters" (page 288)

"Feature interactions" (page 288)

"Feature packaging" (page 291)

"Feature implementation" (page 291)

"Feature operation" (page 292)

Feature description

The Periodic Pulse Metering (PPM) feature allows the user of each station within a system to keep an accurate record of Public Switched Telephone Network (PSTN) and Direct Outward Dialing (DOD) calls for billing or administration. The PPM feature:

- Detects rapid PPM (the system will be able to detect and count at least three pulses per second).
- Records the accumulated PPM count for each call on the Call Detail Reporting (CDR) if equipped.
- Calculates and records the total charge for each call based on the assigned unit and the total number of received pulses for the call.
- Allows the attendant to mark a specified call in order to read out the number of accumulated PPM counts against this call.
- Allows the customer to specify a particular schedule for printing the MR reports.
- Supports Call Detail recording (CDR) on multiple call transfer for outgoing PPM calls.

Copyright © 1994–2007, Nortel Networks
Nortel Networks Confidential

Operating parameters

A Periodic Pulse Meter can count to a maximum of 32,767 pulses. When this limit is exceeded, an indication of overflow is provided.

To access message registration data, telephones with digit display are required.

PPM is not supported by the 1.5 Mbit Digital Trunk Interface (DTI).

Feature interactions

AC15 Recall: Transfer from Norstar

If party Z (on Norstar) calls party X (an outgoing trunk with PPM or Advice of Charge on the system) and transfers the call to party Y, the call is charged against the AC15 trunk route's meter until the transfer is completed. When party Z completes the transfer in ringing status, the charges still accumulate in the AC15 trunk route's meter. If the call is in established status, the charges accumulate against party Y, if party Y has a meter. Otherwise, charges accumulate against the customer meter.

Advice of Charge for EuroISDN

Advice of Charge has the following interactions with the Periodic Pulse Metering (PPM): recording of accumulated call charging information for each call on the CDR record, calculating the total charge for each call based on the assigned unit cost and the accumulated information received from the network, allowing the attendant to read the number of call charge units on a per call basis and allowing a set with a MRK key to access Message Registration information.

Attendant Administration

Attendant Administration does not support the PPM feature.

Call Detail Recording

If both the Call Detail Recording (CDR) and Meter Registration feature are equipped for a customer, the PPM pulse counts for metered calls over trunks for which the CDR feature is enabled are recorded on the CDR record along with the standard CDR information. If the charge option is allowed, the charge for the call is calculated and recorded on the CDR. If the charge option is disabled, zeros are printed in the charge field on the CDR. As a customer option, the CDR records can be printed onto a teletype terminal or tape unit.

Copyright © 1994–2007, Nortel Networks
Nortel Networks Confidential

Call Forward All Calls, Call Forward No Answer, Hunting

Metered calls transferred or extended from one station to another using the Call Forward All Calls, Call Forward No Answer, or Hunting feature are charged against the last station at which the call is answered as the controlling station releases. The last party to forward a call onto a metered PPM trunk is charged.

Call Park

When a metered call is parked from one station to another, the controlling station is charged until the call is answered.

Call Pickup

Metered calls transferred or extended from one station and answered at another station using the Call Pickup feature are charged against the station where the call is picked up as the controlling party disconnects.

Call Transfer

If the user of a station which is connected to a metered trunk transfers an internal call to another internal station while the dialed station is still ringing, the PPM pulse count is accumulated against the transferring station until the call is answered by the dialed party, or abandoned by the dialing party. When the call is answered, the pulses are counted against the station to which the call has been transferred.

If the station user transfers the call after consulting with the dialed station user, then the PPM pulses are counted against the controlling station until the call is transferred. When the call is transferred, the PPM pulses are counted against the station to which the call has been transferred. If the transferred call is redirected using any of the call redirection features such as Call Forward or Hunting, the call is charged against the transferring station until the call is transferred. The pulses are then counted against the answering station. This method ensures that PPM meters are charged in a manner consistent with the printing of CDR records.

Camp-On

Metered calls camped-on to a busy station by an attendant are charged against the attendant until the call is answered and the attendant releases.

Conference - Attendant

If an attendant establishes a conference which includes one or more metered trunks, and the attendant first dials a metered trunk as a source, the PPM pulses are counted and accumulated against the attendant. If the attendant continues to hold the conference at the console, the pulses continue to accumulate against the attendant. If the attendant releases the conference from the console, the pulses are accumulated against the

Copyright © 1994–2007, Nortel Networks
Nortel Networks Confidential

station that has been in conference the longest. If the attendant first dials an internal station or a TIE trunk, any connection established thereafter is charged against this station or trunk.

Conference - Three-party/Six-party

Whenever a PPM trunk is added to a conference, a CDR Start record is generated, if CDR is equipped on the trunk. The PPM pulse counts from the trunk are accumulated against the party who initiated the call. If a party who adds a PPM trunk to the conference disconnects while the conference is still in progress, read requests are sent to the PPM trunk to read the residual count. Then, the on-board counter is cleared, the residual count is added to the temporary meter, and the contents of the temporary meter are added to the terminal meter. A CDR Transfer (X) record is then printed against this party, and the temporary meter is cleared. The party that is charged is the one that has been in conference the longest. When a trunk with disconnect supervision disconnects, a CDR End record is immediately printed. For trunks that do not provide a disconnect signal, their CDR records are not printed until the last party disconnects from the conference.

Consultation calls

If a user establishes a consultation call including one or more metered trunks, all the associated pulses are counted against the controlling station until the call is transferred.

Digital Trunk Interface (DTI) - Commonwealth of Independent States (CIS)

Periodic Pulse Metering is not supported by CIS DTI.

Italian Central Office Special Services

Periodic Pulse Metering pulses are received from the Central Office according to the charge of the accessed service, and are collected and stored as per normal procedures.

Italian Periodic Pulse Metering

This feature now allows PPM pulses to be counted on Italian DTI2 trunks. The Italian DTI2 option default is set to NA (that is, not active when software prior to the introduction of this feature is upgraded). Existing operation thus continues unaffected by the new feature.

Recall to Same Attendant

Meter recalls are returned to the same attendant whether Recall to Same Attendant is allowed or not. If Return to Same Attendant with Queuing on Busy (RSAQ) is selected as an option, the recalls are queued to a specified attendant.

Copyright © 1994–2007, Nortel Networks
Nortel Networks Confidential

Tandem Switching

If an incoming TIE trunk is connected to a PPM trunk, the pulses are counted against the access code of the TIE route.

Virtual Network Service

Periodic Pulse Metering is supported on the Virtual Network Service Bearer trunks only.

1.5 Mbps Digital Trunk Interface

PPM is not supported by 1.5 Mbps DTI.

2 Mbps Digital Trunk Interface

PPM operates the same for 2 Mbps DTI as for analog trunks.

Feature packaging

This feature is packed under Periodic Pulse Metering/Message Registration (MR), package 101.

Feature implementation

Task summary list

The following is a summary of the tasks in this section:

1. "LD 17" (page 291)

   - Select PPM functionality in the Configuration Record.

2. "LD 12" (page 292)

   - Create or modify a meter key for attendant consoles.

3. "LD 15" (page 292)

   Assign Meter Incoming Call Indicator.

4. "LD 16" (page 292)

   Create or modify data for each DID trunk route data block to allow or deny MFC Signaling option.

5. "LD 14" (page 292)

   Polarity Sensitivity of Trunk Data Blocks must be created or modified.

LD 17

Prompt	Response	Description
REQ	CHG	Change
TYPE	PARM	System parameters

Copyright © 1994–2007, Nortel Networks
Nortel Networks Confidential

Prompt	Response	Description
...		
MTRO	PPM	Periodic Pulse Metering meter option

LD 12

Prompt	Response	Description
...		
KEY	xx MTR	Add a meter key.

LD 15

Prompt	Response	Description
...		
ICI	xx MTR	xx is the selected key/lamp number.

LD 16

Prompt	Response	Description
...		
CDR	(NO) YES	Call Detail Recording for the trunk route.
MR	PPM	Message Registration Buffered PPM signal to be counted on this route.

LD 14

Prompt	Response	Description
...		
SIGL	GRD LOP	Signaling start arrangement, Ground or Loop.
SUPN	YES (NO)	Trunk Supervision required (not required)
STYP	PSP (PIP)	Polarity sensitive packs. Polarity insensitive packs.

Feature operation

If the attendant desires billing information immediately upon the completion of a long distance call, the call must be flagged by the attendant as a metered call. When a metered call is terminated or modified, the same attendant is recalled and the calculated call charge or PPM count for this call is displayed on the console. If the call is transferred, a Meter Recall will be routed to the attendant for each portion of the trunk connection.

Copyright © 1994–2007, Nortel Networks
Nortel Networks Confidential

The following keys are added the attendant console for this feature:

- The **MTR** key and lamp that can be assigned at any position on the flexible feature key strip on the attendant console, and
- The **Meter Recall ICI** key and lamp that can be assigned at any ICI position on the attendant console.

Marking a Call as Metered

The attendant can request the call charge or PPM count on any outgoing PPM call by pressing the **MTR** key after the PPM call has been made. When the **MTR** key is pressed, the meter lamp is lit and all the metered outgoing PPM trunks connected to the active console loop (for example, as in a conference) are marked as metered. Additional PPM trunks added to the conference hereafter are marked as metered automatically. Metering a non-PPM call is ignored.

To cancel the metered flag press the **MTR** key.

Meter Recall

When a metered call is modified or disconnected, a meter recall is presented to the attendant. The following occurs:

1. The meter recall ICI lamp comes on.
2. The Source side of an idle loop is lit.
3. The Destination lamp remains off.
4. The following information appears on the display of the attendant consoles:
   a. The DN of the station or Access Code of the TIE trunk on which the external call was placed is shown on the left-hand portion of the digit display.
   b. If the option "charge to attendant console" is selected, the call charge is calculated by multiplying the PPM count in the temporary meter for this call by the customer assigned unit cost. The call charge is then shown on the right-hand portion of the digit display. If an overflow occurs when the charge is calculated, an overflow indication is given to the attendant – "DN-32767".
   c. If the option "charge to attendant console" is disabled, the PPM count in the temporary meter is shown on the right-hand portion of the digit display.

Copyright © 1994–2007, Nortel Networks
Nortel Networks Confidential

If the attendant who originated the metered call is in Position Busy, the meter recall is presented to the next idle attendant console. It is possible for an attendant console unequipped with a **MTR** key to receive a meter call. If all attendants are in Night Service or Position Busy, the recall is saved in the attendant queue until one of the attendants becomes idle.

An attendant answers the meter recall by pressing the **Loop** key, and releases the Call by pressing the **Rls** key or another **Loop** key.

Copyright © 1994–2007, Nortel Networks
Nortel Networks Confidential

Personal Call Assistant

Contents

This section contains information on the following topics:

"Feature description" (page 295)

"Operating parameters" (page 301)

"Feature interactions" (page 302)

"Feature packaging" (page 308)

"Feature implementation" (page 309)

"Feature operation" (page 311)

Feature description

Personal Call Assistant (PCA) allows the simultaneous ringing of clients with different Directory Numbers (DNs). The clients do not have to be located on the same switch. The PCA passes through the originator's Calling Line Identification (CLID) to the called party's terminal. PCA must be configured separately for each terminal.

A benefit of a PCA group, as opposed to a MADN group, is that calls can be placed between PCA-configured terminals. This is valuable when the terminating client can support only a single DN (such as some wireless devices).

PCA allows calls to be extended to an external number, provided the trunk access code is included in the target PCA DN. When a call is extended to an external number, PCA extends the caller's CLID to the called terminal.

A PCA target DN is supported on the following terminals:

- analog (500/2500-type) telephones
- digital telephones
- Nortel IP Phone 2001, IP Phone 2002, and IP Phone 2004

Copyright © 1994–2007, Nortel Networks
Nortel Networks Confidential

- Nortel IP Softphone 2050
- Nortel Mobile Voice Client (MVC) 2050

To configure PCA functionality:

1. Enable PCA in LD 15.
2. Configure a virtual superloop on the system in LD 97.
3. Configure PCA in LD 11 as the Primary MADN. MADN behavior can be modified through multiple- and single- call ringing.

   PCA shares the same DN as the desktop telephone.
4. Configure Key 0 as Multiple Call Arrangement with Ringing (MCR), Multiple Call Arrangement without Ringing (MCN), Single Call Arrangement with Ringing (SCR), or Single Call Arrangement Non-ringing (SCN) with the same DN as the desktop telephone.
5. Configure Key 1 as a Hot P key.

   In certain configurations it is not necessary to configure a number against Key 1, as the system generates a blending service DN according to the customer settings in LD 15.

PCA scenarios

CS 1000/Meridian 1 applications

The following are CS 1000/Meridian 1 applications of PCA:

- call extended through a PCA within a stand-alone system
- call extended through a PCA and CO to a cell phone
- call extended through a PCA to a group
- "Network-wide Multi Call" (page 299)
- CS 1000/Meridian 1 Help Desk

Call extended through a PCA within a stand-alone system Figure 6 "Call extension configuration within a stand-alone system" (page 297) shows a PCA configuration within a stand-alone CS 1000/Meridian 1 system.

Copyright © 1994–2007, Nortel Networks Nortel Networks Confidential

Figure 6
Call extension configuration within a stand-alone system

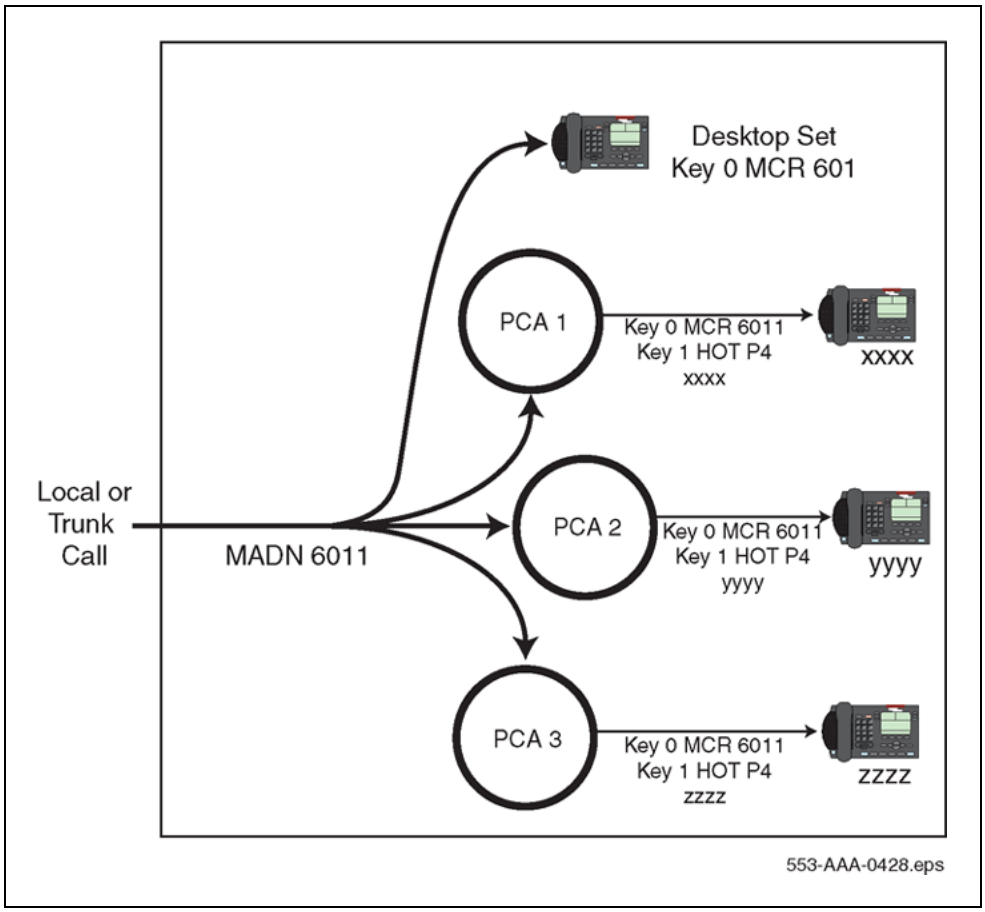

Call extended through a PCA and CO to a cell phone See Figure 7 "Call extended through a PCA and CO to a cell phone" (page 298) for an example of a call extended through a PCA to a cell phone.

Copyright © 1994–2007, Nortel Networks
Nortel Networks Confidential

Figure 7
Call extended through a PCA and CO to a cell phone

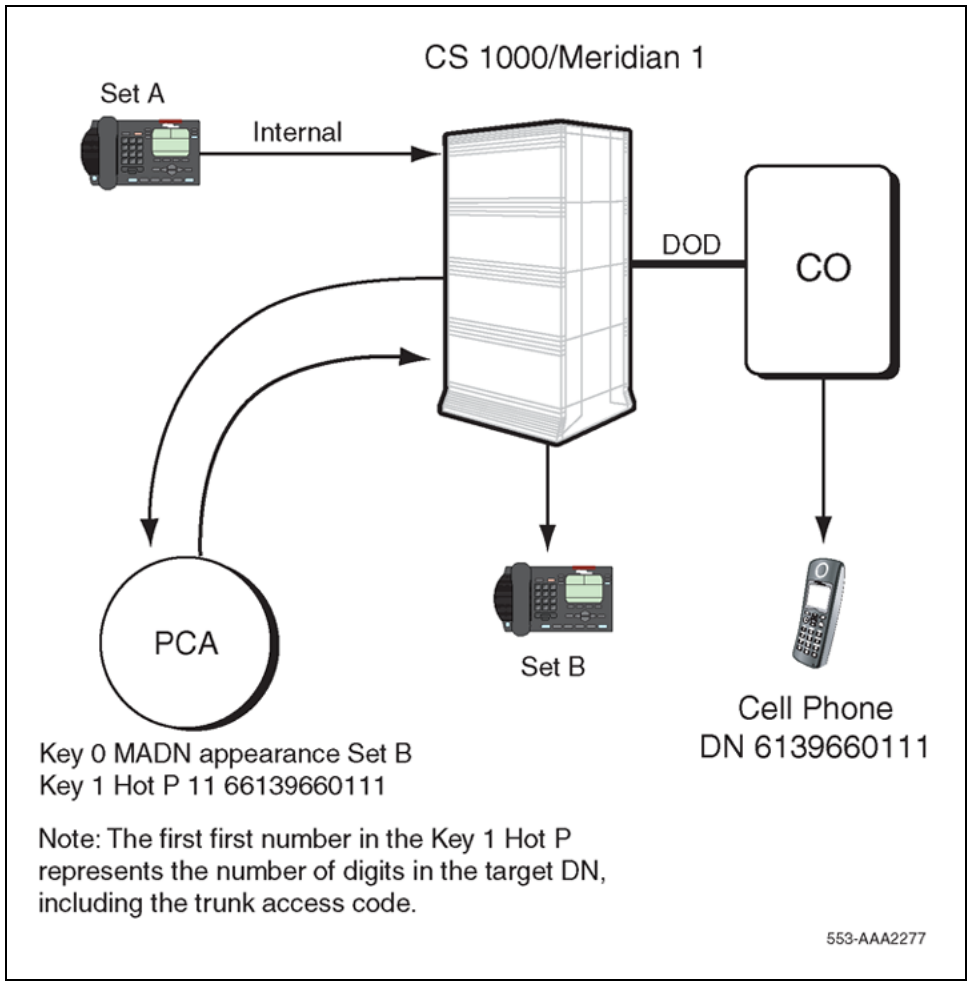

In Figure 7 "Call extended through a PCA and CO to a cell phone" (page 298), Set A calls Set B, which is configured with PCA. The PCA extends the call to a target DN (cell phone). The call rings on Set B and the cell phone simultaneously. The first set answered (either directly or through redirection) assumes control, and the other set stops ringing.

If the call is not answered, the redirection treatment on the cell phone or Set B is invoked.

Call extended through a PCA to a group See Figure 8 "Call extended through a PCA to a group" (page 299) for an example of a call extended through a PCA to a group.

Copyright © 1994–2007, Nortel Networks
Nortel Networks Confidential

Figure 8
Call extended through a PCA to a group

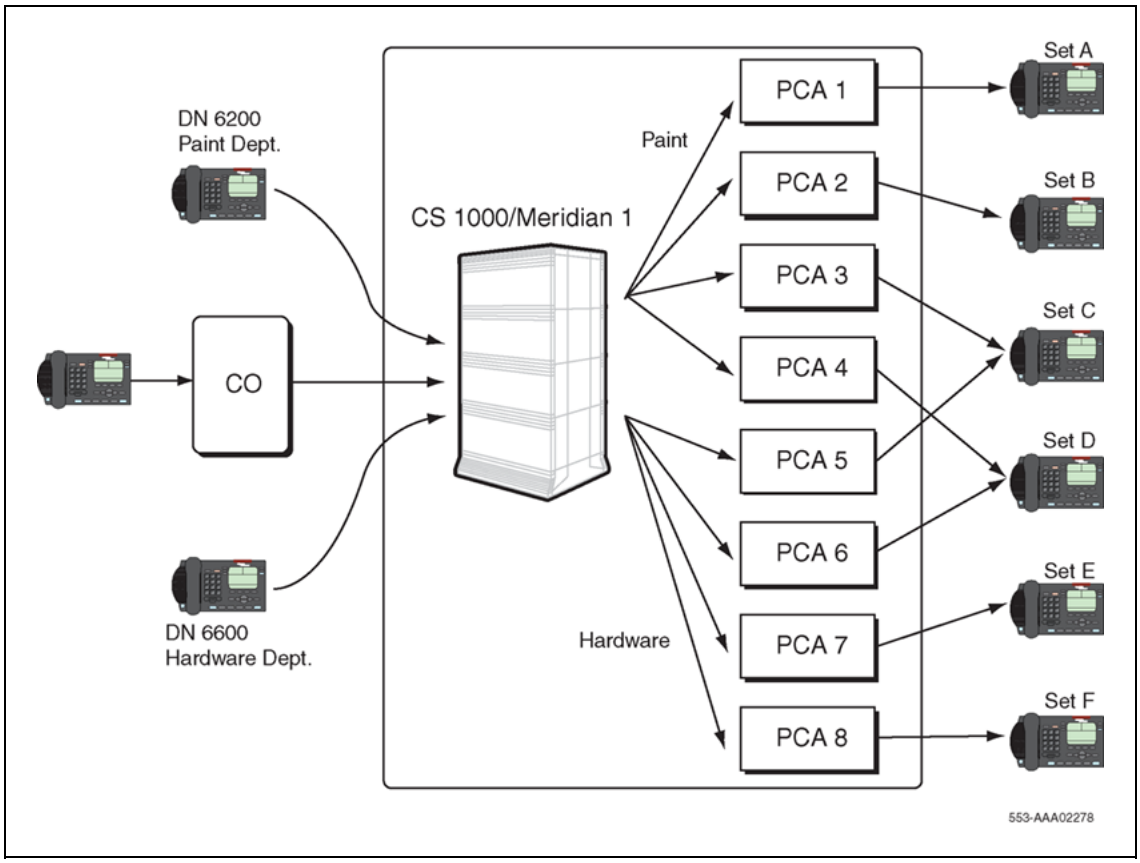

In Figure 8 "Call extended through a PCA to a group" (page 299), a call terminating at the Paint Department DN rings on sets with unique DNs through the configuration of the PCA. A separate PCA must be configured for each unique target DN. When the Paint Department is dialed, PCAs 1–4 extend the call to the DNs of Sets A–D respectively, causing the sets to ring simultaneously.

Multiple PCAs can be configured for one set. This configuration allows a single employee to participate in more than one group. When the Hardware Department is dialed, PCAs 5–8 extend the call to the DNs of Sets C-F. PCAs 3 and 5 terminate calls from both the Paint Department and the Hardware Department to Set C; similarly, PCAs 4 and 6 both terminate calls to Set D.

Network-wide Multi Call See Figure 9 "Network-wide Multi Call" (page 300) for an example of a Network-wide Multi Call.

Copyright © 1994–2007, Nortel Networks
Nortel Networks Confidential

Figure 9
Network-wide Multi Call

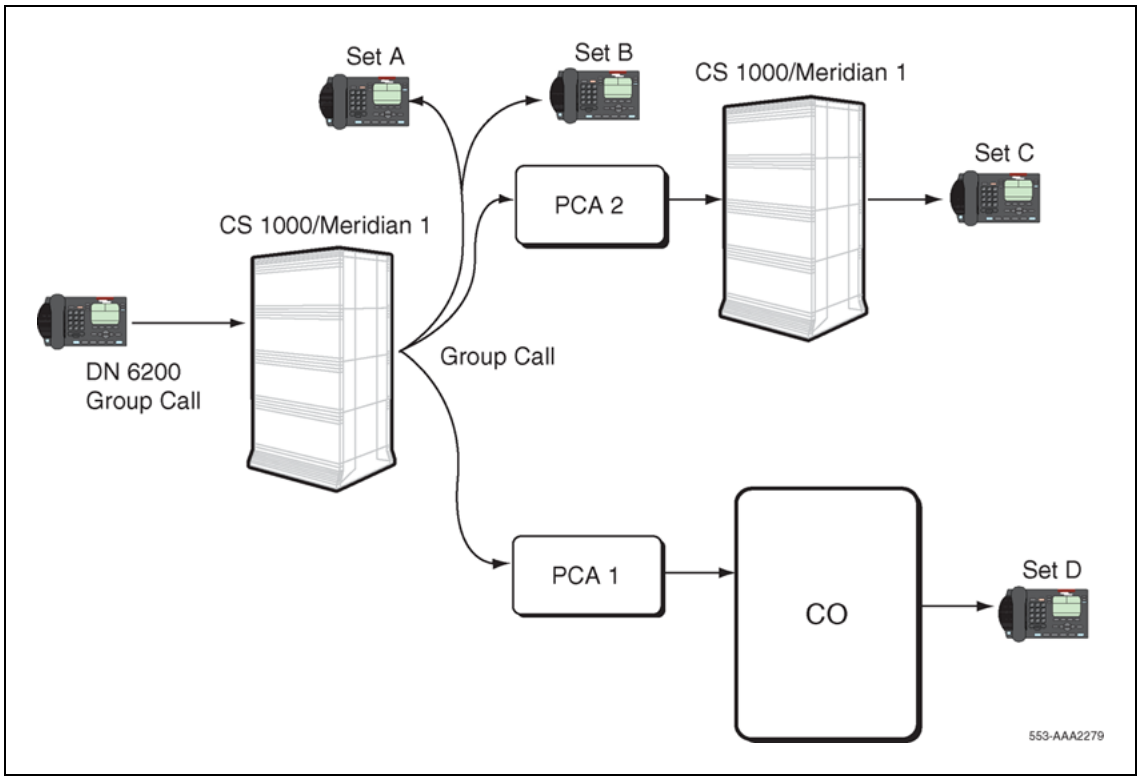

In Figure 9 "Network-wide Multi Call" (page 300), an incoming call is ringing on the telephone shown as DN 6200. The PCA feature activates calls to Set A and Set B internally. PCA 2 is configured to extend the call to Set C through a remote system (include Trunk Access codes). PCA 1 is configured to extend the call to Set D through the CO, (include Trunk Access codes). All sets ring simultaneously. The first set to answer assumes control of the call, and the other sets stop ringing.

CS 1000/Meridian 1 applications with Multimedia Communication Server 5100

The following are CS 1000/Meridian 1 applications with Multimedia Communication Server 5100 (MCS 5100):

- Distributed CS 1000/Meridian 1 with Call Switching through DMS
- Distributed CS 1000/Meridian 1 with Common SIP/PRI Gateway
- blended calls

Blended calls This section describes call scenarios for CS 1000/Meridian 1 systems working with MCS 5100 for call extension. In these instances, PCAs may not be on the same system as their target DNs.

Copyright © 1994–2007, Nortel Networks
Nortel Networks Confidential

The following table details the blended call process.

If	Then
The MCS 5100 user answers	• The PCA merges the incoming call with the MCS 5100 user. • Upon completion of the merge procedure, the PCA is no longer required, and drops from the call.
The CS 1000/Meridian 1 user answers	The PCA drops the extension of the call to the MCS 5100 user.
Neither MCS 5100 nor the CS 1000/Meridian 1 user answers	• The call times out and receives appropriate treatment as configured (for example, Voice Messaging). • The CS 1000/Meridian 1 desktop and other MADNs stop ringing. • The PCA drops the extension of the call to the MCS 5100 user.

Operating parameters

To support simultaneous ringing, MADN functionality has been enhanced as follows:

- MADN groups can exist across networks; end users can be located at any dialable location and have a different DN than the MADN.
- The system can extend MADNs to local numbers if the switch is configured to forward to external numbers.
- Signaling is extended to the target node from the system to enable users on the system to access multimedia applications.

If a call is answered coincidentally on the target node terminal, then call treatment is queue-dependant, as the messages are processed in the order in which they are received. If the trunk call is processed last, the call is released and the trunk is dropped.

PCA can extend calls across trunk types that provide answer supervision. However, CLID is supported only on ISDN PRI, PRI2, and H.323 trunks.

When you configure multiple PCAs with the same MADN, you cannot update individual PCAs using Flexible Feature Codes (FFCs).

The system does not support network-wide FFC operation. However, FFC works with Direct Inward System Access (DISA).

The system does not invoke FFCs from the attendant console.

An attendant console cannot be the target of a PCA.

Copyright © 1994–2007, Nortel Networks
Nortel Networks Confidential

The HOT P DN length can be a maximum of 21 characters when using FFC, due to space restrictions in the Call Register. If the HOT P DN is updated using LD 11, the DN length can be a maximum of 32 characters.

Feature interactions

The PCA feature has the same feature interactions as the MADN feature, which are as follows.

Automatic Redial

An Automatic Redial (ARDL) call from a Single Call Ringing (SCR) or Single Call Non Ringing (SCN) is redialed only when all sets that have the same DN are free. An ARDL call from a Multiple Call Ringing (MCR) or Multiple Call NonRinging (MCN) is redialed only when the originating key is free.

Automatic Wake Up

All Multiple Appearance DNs are rung, including both primary and secondary DNs. Programming the wake up request using the Wake Up key applies only to telephones with the primary DN on Key 0, and the Wake Up indicator operates as described only on the telephone that is currently programming the wake-up request.

In addition, if two or more Multiple Appearance Primary DN telephones program a wake up request at the same time, the last telephone to finish overrides. All telephones with the same primary DN have the same request time of the last telephone to program a request. If the last telephone cancels the request, all requests are canceled. When the wake up programming sequence is finished, all Wake Up indicators on Multiple Appearance Prime DNs are updated unless a telephone is in the middle of Wake Up programming. If the AWU Recall option is chosen, the recall is presented to any idle attendant console in the same Console Presentation Group (CPG) equipped with the AWU key.

Automatic Wake up FFC Delimiter

For Multiple Appearance Directory Numbers, wake up information is stored, deleted, and queried from a DN's first primary appearance Terminal Number.

Call Detail Recording

Call Detail Recording (CDR) for Personal Call Assistant is handled in the following manner:

- If the call is answered on the desktop, there is no change from existing CDR operation.
- If the call is answered on a cell phone supported by Succession MX, the following CDR records are created:

Copyright © 1994–2007, Nortel Networks Nortel Networks Confidential

— CS 1000 and Meridian 1: PCA to DOD (Succession MX) and DID to DOD (after the call is joined to the Succession MX)

— Succession MX: DID (from CS 1000 and Meridian 1) to DOD (cell phone)

Call Detail Recording on redirected incoming calls

If the DN of the set forwarding the call is a Multiple Appearance DN, the Terminal Number of the set is printed out in the AUX ID field (that is, line two of the Call Detail Recording record).

Call Forward by Call Type, Call Forward No Answer, Second Level

Call redirection parameters, such as Call Forward No Answer, are derived from the TN data block of the prime appearance of the called MADN. If there is more than one prime appearance, the parameters are selected from the last TN in the DN block. If more than one prime appearance of the MADN exists, the following information must be considered prior to configuring call redirection parameters for MADNs.

The DN Block organizes MADN information in numerical TN order. The TN with the highest numerical value (000-0-06-03) is placed at the beginning of the list. The list then continues in descending order with the lowest numerical TN (000-0-03-01) at the end of the list. Service change activity affects the organization of the DN list as follows:

- If a telephone undergoes service change, its TN is moved to the beginning of the DN list, regardless of the numerical value. This telephone remains at the beginning of the list until another service change or a SYSLOAD.
- If a DN appears on analog (500/2500-type) telephones and digital telephones, the analog (500/2500-type) telephones are listed in numerical TN order at the top of the list. Digital telephones are listed in numerical TN order at the bottom of the list. A service change to an analog (500/2500-type) telephone moves its TN to the beginning of the list. A service change to a digital telephone moves its TN to the end of the list.
- A SYSLOAD restructures the list back to numerical TN order, with analog (500/2500-type) telephones at the top and digital telephones at the bottom. Call redirection parameters continue to be derived as described above.

Call Forward, Remote (Attendant and Network Wide)

The Call Forward, Remote (RCFW) feature applies only to the primary appearances of Multiple Appearance DNs, and it is recommended that only one appearance of a Multiple Appearance DN be configured as the prime

Copyright © 1994–2007, Nortel Networks
Nortel Networks Confidential

DN. For the case of multiple stations with the same prime DN and SCPW, the RCFW operation applies to the station that has the Multiple Appearance Redirection Prime (MARP) assigned to it.

If none of the stations having the DN and SCPW assigned are configured as the MARP TN for that DN, the RCFA and RCFD applies to all stations matching the DN and SCPW. The attendant-based RCFW feature applies remote call forward operation only to the prime DN with MARP status. If the DN is not the prime DN or does not have MARP status, the user receives overflow tone.

Call Waiting Redirection

The Call Waiting Redirection feature applies to unanswered Call Waiting calls that apply to single appearance DNs and primary appearance DNs of MADNs.

Calling Party Name Display Denied

For a ringing call to a Multiple Appearance DN, the name on the calling set display can be suppressed by configuring any of the Terminal Numbers with NAMD Class of Service. The digit display on the calling set cannot be suppressed. The called digits are displayed even though the Class of Service on any of the Terminal Numbers is DIGD. The called set display is subject to the Class of Service of the calling party. For an established call to a Multiple Appearance DN, the calling set display is subject to the Class of Service configured for the answering set. The answering set display only is subject to the Class of Service of the calling party. The displays of the other sets in the Multiple-appearance group are blank.

China - Attendant Monitor

If Attendant Monitor is attempted on a Multiple Appearance DN, the Multiple Appearance Redirection Prime (MARP) TN becomes the desired party.

Controlled Class of Service

Controlled Class of Service (CCOS) restriction levels are activated or canceled on controlled telephones through their Prime Directory Number (PDN). When the PDN of a digital telephone is made CCOS active, all DNs on that telephone are also restricted. If the DN is a PDN on other telephones, those telephones are also restricted (if they have CCSA Class of Service).

Controlled Class of Service, Enhanced

All Controlled Class of Service (CCOS) restriction levels are activated and canceled from the Prime Directory Number (PDN) for CCOS controlling telephones. The PDN for a digital telephone is made CCOS active, and all DNs for that telephone are restricted as well. If that DN is a PDN on other telephones, they are also restricted (if they have CCSA Class of Service).

Copyright © 1994–2007, Nortel Networks
Nortel Networks Confidential

Digital Private Signaling System 1 (DPNSS1) Executive Intrusion

If the attendant tries to extend a call to a DN that appears on more than one set, this DN can either be:

- Multiple-Call Arrangement with Ringing (MCR). When a call terminates on this DN, all idle stations on which the DN appears are rung. The call is established only with the station which has answered first. All others are idle.
- Multiple-Call Arrangement with No Ringing (MCN). The only difference between MCN and MCR is that the called stations are not rung (only their DN keys flash).
- Single-Call Arrangement with Ringing (SCR). When a call terminates on this DN, all idle stations on which the DN appears are rung. The call is established only with the station which has answered first. All others are busy.
- Single-Call Arrangement with No Ringing (SCN). The only difference between SCN and SCR is that the called stations are not rung (only their DN keys flash).

Digital Trunk Interface (DTI) - Commonwealth of Independent States (CIS)

Because the ANI category is defined on a per-set basis, two stations with the same Multiple Appearance Directory Number (MADN) can be assigned different ANI categories.

Directory Number Expansion

The DN can have up to seven digits if the Directory Number Expansion package is equipped. If Loop Restriction Removal is allowed, telephones with MADNs can be moved across loops using Automatic Set Relocation (LD 25), the digital telephones data block (LD 11), the analog (500/2500-type) telephone data block (LD 10), or Attendant Administration (LD 12).

Display Calling Party Denied

When a Multiple Appearance DN is ringing, the display of the calling telephone does not show the caller's name if at least one of the TNs has Named Denied (NAMD) Class of Service. The dialed DN displays even if one TN has a DN Denied (DDGD) Class of Service. The display of the called telephone shows the DN and the caller's name according to the Class of Service of the calling DN. When a Multiple Appearance DN is answered, the display of the calling telephone shows the DN and caller's name and DN according to the Class of Service of the answering TN. The display of the answering telephone remains the same, while the displays of the other telephones are blank.

Copyright © 1994–2007, Nortel Networks
Nortel Networks Confidential

Electronic Lock Network Wide/Electronic Lock on Private Lines

The same locked or unlocked state applies to all Terminal Numbers with the same primary DN and the same SCPW. Terminal Numbers with the same DN, but not having the same SCPW, cannot be locked or unlocked.

Group Call

The PCA feature is blocked for Group Call. If a telephone that has PCA programmed to an external number is also a Group Call member, PCA will not be activated if the call to the telephone is a Group Call.

Group Hunt

While Multiple Appearance DN (MADN) single call arrangements are treated the same as Single Appearance DNs (SADN), MADN multiple call arrangements must be avoided in a group hunt list. With MADN multiple call arrangement, the idle or busy status of the MADN is determined by the Terminal Number (TN) data block of the prime appearance of the called DN. If there is more than one prime appearance of the called DN, the idle or busy status is then selected from the last TN in the DN block for the MADN (DNB prompt in LD 22). This means that there can be idle appearances of the MADN, while the hunt cycle regards them as busy and attempts to terminate on the next idle member of the group hunt list.

If an MADN multiple call arrangement must be used, a supervisor set must be assigned to the hunt group. This supervisor set must be given the only prime appearance of the MADN. Any other appearance must have the MADN programmed as a secondary DN (any DN key other than 0). In this way, the supervisor set controls the status of the MADN and thus the group hunt treatment. If the supervisor set is busy, the hunt does not terminate on the MADN.

Hunt

Hunt can be controlled by the MADN Redirection Prime (MARP) Terminal Number (TN). If the MARP system option is disabled, Hunt proceeds as if MARP did not exist. If all the telephones in the Multiple Appearance Directory Number (MADN) group are digital telephones, ringing telephones are placed at the top of the DN list, and non-ringing telephones are placed at the bottom.

If a Multiple Appearance Directory Number appears in a group with several telephone types, the telephone type affects the position of the TN in the list. The analog (500/250-type) telephones are listed at the top, and digital telephones are listed in numerical TN order at the bottom. A service change to an analog (500/2500-type) telephone moves its TN to the top of the list. A service change to a digital telephone moves it to the bottom of the list.

Copyright © 1994–2007, Nortel Networks
Nortel Networks Confidential

Call redirection follows the TN order from top to bottom. The MARP TN is always checked to determine if and how the call is to be redirected by Hunt, regardless of where the MARP TN resides in the TN list of the DN block. No searching of the TN list of the DN block is needed.

Hunt follows the hunt chain based on the originally dialed DN. The actual functioning and requirements for Hunt are not changed by the MARP feature. The basic change introduced by the MARP feature is to always have a designated TN, the MARP TN, as the TN supplying the call redirection parameters. If the MARP TN does not have Hunt control enabled, Hunt is not attempted. Other features for redirecting calls to busy DNs may be attempted based on the MARP TN.

A Short Hunt sequence begins when the MARP TN of a busy DN can perform Short Hunt. When a Short Hunt begins, it completes on that telephone before going to the Hunt DN. The precedence of Short Hunt over normal Hunt is maintained. Once a Short Hunt sequence is started on a digital TN, all the DNs in the Short Hunt sequence on that TN are attempted before redirecting the call to the TN's Hunt DN. Thus, a Hunt Chain connects Short Hunt sequences through Hunt DNs only.

Last Number Redial

A last number dialed on a Directory Number (DN) with multiple appearances is stored only against the telephone from which the number was originally dialed.

Loop Restriction

If Loop Restriction removal is not enabled, telephones with MADNs can be moved by using the Automatic Set Relocation feature (LD 25) or the Attendant Administration feature (LD 12).

Meridian 911

The DN keys for multiple appearance sets can be defined as an SCR (Single Call Ringing) key or as an MCR (Multiple Call Ringing) key. For those DNs (keys on MADN sets) that are SCR, only one call can be answered at a time. That is, once a call taker answers a call, future calls to that DN receive busy tone until the call taker on that DN disconnects. For DNs that are MCR, calls are given busy tone once every call taker is busy answering a call. If one call taker is answering a call and there are other call takers available, a new call to that DN causes the sets of the available call takers to ring. Any available call taker can then answer the new call.

Message Registration

For Multiple Appearance Directory Number (MADN), the system selects the appropriate meter for the DN as follows. The MADN accesses the meter of the most recently configured telephone having a Prime DN (PDN)

Copyright © 1994–2007, Nortel Networks Nortel Networks Confidential

appearance and Message Registration Allowed (MRA) Class of Service. If no Terminal Number (TN) in the DN block has MRA Class of Service, the customer meter is charged. For the Message Registration Key (MRK), the system provides overflow and sets the MRK lamp to flash. For the Background Terminal (BGD), it prints a NO DATA FOUND message.

Privacy

If a Multiple Appearance, Single Call Arrangement (SCR) or Single Call Arrangement without Ringing (SCN) DN is shared by digital telephones only, Privacy is in effect. No one can enter a call unless the call is first placed on Hold, or unless Privacy Release is activated to enable another appearance to enter the call. If this configuration is shared between these telephones and single-line telephones, Privacy is not in effect for any appearance of the DN. Anyone sharing the DN can enter the call at any time.

Privacy Override

Because the Privacy feature is not active in this mode, telephones with a Privacy Override Denied Class of Service can bridge into an active call.

Privacy Release

Privacy Release has no effect on Multiple Appearance, Multiple Call Arrangement with Ringing (MCR), or Multiple Call Arrangement without Ringing (MCN) calls.

Remote Call Forward

With a Multiple Appearance Directory Number (MADN) and both sets having a Station Control Password (SCPW), Remote Call Forward does not operate as intended. That is, if Call Forward has been activated using the Remote Call Forward feature, Call Forward remains activated when an attempt to deactivate it is made from the set on which it is active.

Three Wire Analog Trunk - Commonwealth of Independent States (CIS)

Because the ANI category is defined on a per-set basis for Three Wire Analog Trunks, two stations with the same multiple Appearance DN can be assigned different ANI categories.

Voice Call

If a Voice Call DN is added to a second telephone, the DN becomes a Multiple Appearance DN (MADN). Voice Call does not support MADN.

Feature packaging

The PCA feature requires Personal Call Assistant (PCA) package 398.

Copyright © 1994–2007, Nortel Networks
Nortel Networks Confidential

Feature implementation

Task summary list

The following is a summary of tasks in this section:

- "LD 15" (page 309)

  Enable PCA at the customer level.
- "LD 97" (page 310)

  Add virtual superloops.
- "LD 57" (page 310)

  Configure FFCs for PCA control.
- "LD 11" (page 310)

  Configure a new PCA.

LD 15

Prompt	Response	Description
REQ:	CHG	Change existing data.
TYPE:	FTR	Features and options
CUST		Customer number
	0-99	Range for Large System and CS 1000E system
	0-31	Range for Small System and Media Gateway 1000B.
...	...	...
VO_ALO	(NO) YES	Enable (disable) Virtual Office Automatic Logout.
PCA	(OFF) ON	Enable (disable) Personal Call Assistant The PCA configuration is preserved and enabled regardless of whether or not the feature is enabled.
TPDN	yyyy	Target PCA DN, where yyyy = the primary DN. TPDN is prompted only if PCA is set to ON. If there is no DN configured against the HOT P key in LD 11, this value is used to extend the call using the PCA feature.

Copyright © 1994–2007, Nortel Networks
Nortel Networks Confidential

Prompt	Response	Description
		Enter X to remove. However, if there is at least one PCA with no target DN configured in LD 11, then this operation does not succeed.

LD 97

Prompt	Response	Description
REQ	CHG	Change existing data.
TYPE	SUPL	Superloop parameters
SUPL	vxxx	Add virtual superloops.

LD 57

Prompt	Response	Description
REQ	NEW CHG PRT	Create, change, or print a data record.
TYPE	FFC	Flexible Feature Code
FFCT	(NO) YES	Flexible Feature Confirmation Tone
CODE	PCAA	This is the code to activate PCA or change the HOT P DN.
PCAA	xxxx	Code number
CODE	PCAD	Code to deactivate PCA
PCAD	yyyy	Code number
CODE	PCAV	Code to verify the status of PCA
PCAV	ZZZZ	Code number

LD 11

Prompt	Response	Description
REQ:	NEW CHG PRT	Add, change, or print a PCA.
TYPE:	PCA	Personal Call Assistant
TN		Terminal Number
	l s c u	Format for Large System and CS 1000E system, where l = loop, s = shelf, c = card, u = unit.
	c u	Format for Small System and Media Gateway 1000B where c = card and u = unit.
CUST	xx	Customer number, as defined in LD 15
CLS	AHA	Automatic Hold Allowed (AHA). AHA is configured by default when the response to the TYPE prompt is PCA.

Copyright © 1994–2007, Nortel Networks
Nortel Networks Confidential

Prompt	Response	Description
KEY	0 aaa yyyy	Primary PCA DN, where aaa = MCN, MCR, SCN, or SCR, where yyyy = the primary DN. The PCA should never be configured as a MARP in an MADN group. The PCA should never be configured as a MARP in an MADN group.
	1 HOT P nn yyyy	Target PCA DN, where nn = PCA DN length (maximum length is 32), where yyyy = the target DN. The HOT P key is the default key. This key must be configured by the user.

Feature operation

The PCA feature operates as outlined in the following sections.

Activating and deactivating PCA at the user level

Three Flexible Feature Codes (FFC) enable the user to activate, deactivate, or change the target DN on a PCA.

To activate or deactivate PCA, perform the following steps:

Step	Action
1	Press the DN key of any terminal connected to the system on which PCA is configured.
2	Enter one of the following FFC codes: a. To activate or change PCA, enter the PCAA FFC. b. To deactivate PCA, enter the PCAD FFC. c. To verify the current status of PCA, enter the PCAV FFC.
3	Enter the prime DN of the terminal.
4	Enter the Station Control Password (SCPW) of the PCA to be changed. If no terminal is configured, the SCPW must be configured on PCA.
5	Enter #, the end-of-dialing digit.
6	Listen for a confirmation tone after entering #. This tone indicates that the password and extension match and the procedure was successful. If you hear a fast busy tone, the procedure failed and you must hang up and try again. The confirmation tone is provided only when FFCT = YES in LD 57.

Copyright © 1994–2007, Nortel Networks
Nortel Networks Confidential

7	Optionally, to update the HOT P DN and activate PCA, perform steps 1, 2 a, 3, and 4, then enter a new target DN (HOT P DN) followed by #. Listen for a confirmation tone after entering #. This tone indicates that the password and extension match and the procedure was successful. If you receive a fast busy tone, the procedure failed and you must hang up and try again.

—End—

The user hears overflow tone if any of the following events occur:

- The SCPL prompt in LD 15 is set to 0 and there is no SCPW configured for the desktop set.
- The user enters the PCA FFCs and the system is not equipped with the PCA package.
- The user enters the PCA FFCs and the LD 15 customer data does not have PCA set to ON.
- The user enters the PCA FFCs for a set that has no PCA in the MADN group.
- The user enters the TPDN FFC for a set that has no PCA in the MADN group.
- The user enters an invalid DN.
- The user enters a DN other than BCS/Ether set DN.
- The user enters "*" or "#" as part of the password.
- The password does not match any SCPWs in the MADN group.

Verifying PCA status

To verify the current status of the PCA, perform the following steps:

Step	Action
1	Press the DN key of any terminal connected to the PBX on which the PCA is configured.
2	Enter the PCAV FFC code.
3	Dial the prime DN of the desktop (same as the PCA).
4	When prompted for the Password, enter the Station Control Password (SCPW) of the desktop set or that of PCA (if configured). If no desktop set is configured, the SCPW must be configured on the PCA.

Copyright © 1994–2007, Nortel Networks
Nortel Networks Confidential

5 Enter #, the end-of-dialing digit.

—End—

Copyright © 1994–2007, Nortel Networks
Nortel Networks Confidential

Copyright © 1994–2007, Nortel Networks
Nortel Networks Confidential

Personal Directory, Callers List, and Redial List

Contents

This section contains information on the following topics:

"Feature description" (page 315)

"Operating parameters" (page 320)

"Feature interactions" (page 321)

"Feature packaging" (page 322)

"Feature implementation" (page 322)

"Feature operation" (page 323)

Feature description

The following telephones support the Personal Directory, Callers List, and Redial List features:

- Nortel IP Phone 2002
- IP Phone 2004
- IP Softphone 2050
- Mobile Voice Client (MVC) 2050
- M3900 series

ATTENTION

For information about the Personal Directory feature for M3900 series telephones, see Telephones and Consoles Fundamentals (NN43001-567).

The Personal Directory, Callers List, and Redial List use a separate central database, called the IP Phone Application Server, to store directory data and user profile options.

Copyright © 1994–2007, Nortel Networks
Nortel Networks Confidential

The Personal Directory allows a user to enter or copy names to a personal directory, delete entries, or delete the entire list.

The Callers List and Redial List are call log features. The content of these lists is generated during call processing. Content cannot be changed; however, a user can delete or, in some cases, copy entries or lists.

Password protection is available to control access to a user's Personal Directory, Callers List, and Redial List.

User profiles, including preferences, statistics, and databases, can be managed using Element Manager. The IP Phone Application Server database can be backed up on a regular schedule and recovered fully or selectively. See *Element Manager System Reference—Administration (NN43001-632)* for more information.

Table 20 "Comparison of Personal Directory with Callers List and Redial List" (page 316) compares the Personal Directory with the Callers List and Redial List features.

Table 20
Comparison of Personal Directory with Callers List and Redial List

Operation	Personal Directory	Callers List and Redial List
Displays date and time of transaction	No	Yes
Modify entry	Yes	No
Dial from the list	Yes	Yes
Delete entry	Yes	Yes
Content view mode (IP Phone 2002 and IP Phone 2004 displays name and DN simultaneously; IP Phone 2002 displays only DN)	Yes	Yes
Delete list	Yes	Yes
Edit and dial (Temporarily modify an entry and dial out. Does not modify record in database.)	No	Yes
Access through soft keys	No	No
Maximum number of entries	100	20 (Redial List) 100 (Callers List)

Personal Directory

Personal Directory supports the following:

- maximum entries = 100

Copyright © 1994–2007, Nortel Networks
Nortel Networks Confidential

- maximum characters in name = 24
- maximum characters in DN = 31
- multiple actions:
  - add new entry
  - edit entry
  - delete entry
  - delete contents of directory
  - copy an entry from Personal Directory to Personal Directory
  - copy an entry from Corporate Directory to Personal Directory
  - dial DN of an entry
  - name search
- password protection to control access to Personal Directory
- one minute time-out

Callers List

Callers List supports the following:

- maximum entries = 100
- maximum characters in name = 24
- maximum characters in DN = 31
- multiple actions:
  - dial DN of an entry
  - edit entry
  - copy entry
  - delete entry
- sorted by the time the call is logged
- contains caller name, DN, time of last call occurrence, and how many times the caller has called this user
- Idle Display option: display and count all calls or only unanswered calls
- displays caller name (Redial List only displays caller DN)
- once 100 entry limit is reached, newest entry overwrites oldest entry
- one minute time-out

Copyright © 1994–2007, Nortel Networks
Nortel Networks Confidential

Call log options

Call log options allows a user to configure preferences on the IP Phone for the following:

- if the Callers List logs all incoming calls or only unanswered calls
- if Idle Set Display indicates when new calls have been logged to the Callers List
- if a name stored in the Personal Directory that is associated with the incoming call's DN is displayed instead of the name transmitted by the Call Server
- the three area codes that should be displayed after the DN rather than before it (for example, local area codes)

Table 21 "Call log options" (page 318) summarizes the call log options.

Table 21
Call log options

Call log option	Description	Default value
Log all/unanswered incoming calls	Configures the Callers List to log all incoming calls or only the unanswered incoming calls	Log all calls
New Call Indication (see note)	When New Call Indication is turned on, a message is displayed on the IP Phone to inform the user of a new incoming call. If not configured, nothing is displayed.	On
Preferred Name Match	Configures whether the caller name displayed is the CPND from the Call Server or the name associated with the DN stored in the Personal Directory	CPND from the Call Server is displayed
Area code set-up	Configures how the incoming DN is displayed. If the area code of the incoming call matches a specified area code, the DN is displayed in the configured manner (for example, the area code may be displayed after the DN)	No area code
Name display format	Configures the format of the name display of the incoming call on the IP Phone. There are two choices: <first name> <last name> <last name> <first name>	<first name> <last name>

Copyright © 1994–2007, Nortel Networks
Nortel Networks Confidential

The IP Phone 2002 and IP Phone 1120E do not display the New Call Indication on the idle screen at the same time as the date and time. Instead, the New Call Indication alternates with the date and time display.

Redial List

Redial List supports the following:

- maximum entries = 20
- maximum characters in name = 24
- maximum characters in DN = 31
- contains name, DN, and the time the last call to that DN occurred in each entry
- newest entry overwrites oldest entry once 20-entry limit is reached
- sort by the time the call is logged
- multiple actions:
  - dial DN of an entry
  - edit entry
  - copy entry
  - delete entry
  - delete contents of list
- one minute time-out

Password protection

The Station Control Password (SCPW) controls access to the user's private Personal Directory, Callers List, and Redial List information.

When the IP Phone first registers to the system after it has been created, by default the password protection is turned off. If a default password has been defined for the user, then the user can enable or disable password protection and change the password. The changed password is updated on the Call Server and can be viewed in LD 20. Other applications that use this password, such as Virtual Office and Remote Call Forward, are affected by the password change.

Password guessing protection

A password retry counter tracks how many incorrect password entries are made. If the IP Phone password verification fails three times in one hour, then the user is locked out for one hour. This means that the Personal Directory, Callers List, and Redial List cannot be accessed and no password administration can be performed. A message displays on the IP Phone to indicate that access is locked.

Copyright © 1994–2007, Nortel Networks
Nortel Networks Confidential

After one hour, the retry counter is reset and access is unlocked. The retry counter also resets when the password is entered correctly.

The administrator can reset the counter and unlock the access either in Element Manager or in LD 32.

If a user is locked out from using their SCPW to access their Personal Directory, Callers List, and Redial List, then the user is also blocked from accessing their Virtual Office login, because VO uses the same SCPW. Conversely, a user who is locked out from the VO login is also locked out from accessing their Personal Directory, Callers List, and Redial List.

Forgotten password

If the user forgets his or her IP Phone password, the administrator can reset the retry counter and change the user's password in Element Manager. Once the administrator changes the password, the lock is released automatically.

Operating parameters

ATTENTION

IMPORTANT!
CPND must be configured as a Class of Service to enable Personal Directory, Callers List, and Redial List on the system.

IP Phone Application Server administration

The IP Phone Application Server runs on the Signaling Server. If less than 1000 users are supported, then the IP Phone Application Server can run on the same Signaling Server as Element Manager. If more than 1000 users are supported, then the IP Phone Application Server must run on a separate Signaling Server (preferably a Follower) with no colocated applications. Therefore, it is necessary to configure in Element Manager the ELAN network interface IP address of the specific Signaling Server where the IP Phone Application Server is installed.

The IP Phone Application Server cannot be shared across multiple Signaling Servers.

Because a backup and restore of the IP Phone Application Server database can be performed, it is necessary to configure information to support the backup/restore functionality.

The IP Phone Application Server and remote backup configuration are configured in Element Manager by clicking (in the navigator) **IP Network > Personal Directories**. The following parameters are configured:

- IP address of the IP Phone Application Server where the database is located

Copyright © 1994–2007, Nortel Networks Nortel Networks Confidential

- flag to turn on/off the remote backup functionality
- IP address of the server where the backup is saved
- path, filename, user ID, and password to support the backup/restore functionality

When a new user is configured on the Call Server, a user profile can be copied to create the new user profile. If a new IP Phone registers and the user is not found in the database, then the system automatically creates a user profile based on default settings and the data on the IP Phone. In this case, the Personal Directory, Callers List, and Redial List are automatically created as empty lists.

Alarms

If the IP Phone Application Server is not installed on the primary Signaling Server, and the other Signaling Server(s) cannot contact the IP Phone Application Server, then an SNMP alarm is raised. The alarm indicates that the Personal Directory, Callers List, and Redial List are not available. If this occurs, the other Signaling Server(s) track the Signaling Server where the IP Phone Application Server resides. When contact with the IP Phone Application Server is made, Personal Directory, Callers List, and Redial List access is resumed.

Feature interactions

Branch Office

Personal Directory, Callers List, and Redial List are supported on the Media Gateway 1000B Core (MG 1000B Core) in Normal mode. Personal Directory, Callers List, and Redial List are not available in Local mode, as the entries are stored on the main office Signaling Server.

Multiple Appearance DN

A user's primary DN and Home Location Code must be unique to the network to support their own specific Personal Directory, Callers List, and Redial List. If using Multiple Appearance DN (MADN) for a group of users and it is necessary to provide users with their own Personal Directory, Callers List, and Redial List, then do not configure MADN as the Primary DN (PDN).

If the MADN is used as the PDN for a group of users, this results in a shared Personal Directory, Callers List, and Redial List. This means that a call arriving on any IP Phone sharing the PDN MADN appears in the Callers List. Calls to a secondary DN on another IP Phone in the shared group appear in the Callers List for all IP Phones, even though the call did not ring on the other IP Phone.

Copyright © 1994–2007, Nortel Networks
Nortel Networks Confidential

IP Network-wide Virtual Office

Personal Directory, Callers List, and Redial List are available when using IP Network-wide Virtual Office. Data is stored on the Signaling Server, not on the IP Phone. This means when a user logs on using IP Network-wide Virtual Office or logs on in MG 1000B Core Normal mode, they can always access their stored names and numbers.

Feature packaging

The IP Media Gateway (IPMG) package 403 is required.

The Flexible Feature Code (FFC) package 139 is required to enable password protection for Personal Directory, Callers List, and Redial List.

Feature implementation

Author's Note: Update procedure

To configure the IP Phone Application Server for the Personal Directory, Callers List, and Redial List features using Element Manager, follow the steps in Procedure 1 "Configuring the IP Phone Application Server" (page 322).

Procedure 1
Configuring the IP Phone Application Server

Step	Action
1	In the Element Manager navigator, click **IP Network > Nodes: Servers, Media Cards** to configure a new node. The Node Configuration window opens.
2	Click the **Personal Directories Server Configuration** link. The **Personal Directories Server Configuration** window opens.
3	Enter configuration parameters for the IP Phone Application Server where the Personal Directory, Callers List, and Redial List database is located. See Table 22 "Sample IP Phone Application Server configuration" (page 322) for a sample IP Phone Application Server configuration.

Table 22
Sample IP Phone Application Server configuration

Data field name	Example	Description
Server IP Address	92.168.10.12	IP address of the database server (for example, the Leader

Copyright © 1994–2007, Nortel Networks
Nortel Networks Confidential

Data field name	Example	Description
		Signaling Server's ELAN network interface IP address)
Perform scheduled remote backup	check	Turn on remote backup functionality
Remote backup time of day (hh:mm)	00:00	The time of day to perform the backup (default is 00:00 midnight)
Remote backup IP address	47.11.22.11	Remote backup server's IP address
Remote backup path	/auto/etherset	Remote path where the back up file will be saved
Remote backup file name	ipldb.db	File name of the backup file
Remote backup userid	etherset	Login name for the remote backup
Remote backup password	etherset	Password for remote backup

—End—

Feature operation

Follow the steps in Procedure 2 "Accessing the call log options" (page 323) to access the call log options for the IP Phone.

Procedure 2
Accessing the call log options

Step	Action
1	Press the IP Phone's **Services** key. The **Telephone Options** menu displays.
2	From the **Telephone Options** menu, select **Call Log Options**.
3	Select the desired options.

—End—

Copyright © 1994–2007, Nortel Networks
Nortel Networks Confidential

Copyright © 1994–2007, Nortel Networks
Nortel Networks Confidential

Phantom Terminal Numbers

Contents

This section contains information on the following topics:

"Feature description" (page 325)

"Operating parameters" (page 325)

"Feature interactions" (page 326)

"Feature packaging" (page 329)

"Feature implementation" (page 329)

"Feature operation" (page 331)

Feature description

The Phantom Terminal Numbers (PHTN) feature permits system administrators to configure Terminal Numbers (TNs) with no associated physical hardware. Normally, a TN with no associated hardware is disabled.

With Phantom TNs configured, system administrators can configure Phantom Directory Numbers (DNs) as well. This feature, in conjunction with Call Forward All Calls (CFW) and Remote Call Forward (RCFW), allows a call to a Phantom DN to be redirected to a physical telephone.

See M3900 (Single Site) Virtual Office for more information on Phantom TNs and Virtual TNs. Phantom TNs described in this chapter are the 500/2500-type TNs.

Operating parameters

Phantom TNs can only have Single Appearance DNs.

All DNs configured on Phantom TNs must conform to the current customer-defined dialing plan.

Copyright © 1994–2007, Nortel Networks
Nortel Networks Confidential

LD 25 (Move Data Blocks) is not supported between Phantom and non-Phantom loops; however, it is supported between Phantom loops.

Only analog (500/2500-type) telephones support Phantom TNs.

Model telephones (such as TN 500M) are not supported.

The Phantom Terminal Numbers feature is not to be used for predictive dialing applications. For information on the Predictive Dialing feature, see "Predictive Dialing" (page 335) in this guide.

A Phantom TN requires one of the Phantom terminal loop types shown in Table 23 "Supported Phantom terminal loop types" (page 326).

Table 23
Supported Phantom terminal loop types

Mnemonic	Description
TERM	Single (1) density terminal loop, configured in LD 17.
TERD	Double (2) density terminal loop, configured in LD 17.
TERQ	Quadruple (4) density terminal loop, configured in LD 17.
SUPL	Superloop (8) density terminal loop, configured in LD 97.

Feature interactions

Attendant Administration

This feature is not supported. Phantom DNs cannot be configured on a non-Phantom TN.

Attendant Blocking of Directory Number

DNs on Phantom TNs will not be overridden by the Attendant Blocking of DN feature.

Automatic Call Distribution

Phantom TNs cannot be configured as Automatic Call Distribution (ACD) agents.

Call Detail Recording

Call Detail Recording records interact with a Phantom TN exactly the same as with an existing TN with its CFW feature turned on.

Call Forward All Calls

Call Forward All Calls is used in conjunction with RCFW to redirect incoming calls to a Phantom TN/DN to a valid DN.

Copyright © 1994–2007, Nortel Networks
Nortel Networks Confidential

Call Forward and Busy Status

When a user attempts to define a BFS key for a Phantom TN, the system generates the following error message: "An invalid TN has been entered for the Busy/Forward Status (BFS) key."

Call Forward, Internal Calls

Internal Call Forward cannot be enabled on a Phantom TN.

Call Forward/Hunt Override Via Flexible Feature Code

Phantom Terminal Numbers are not overridden by the Call Forward/Hunt Override Via FFC feature. If Call Forward/Hunt Override Via FFC is used against a Phantom TN the call will be canceled and overflow tone will be given.

Call Forward, Remote (Attendant and Network Wide)

A Phantom TN does not physically exist; however, all required data blocks are configured.

The Phantom TN feature uses the RCFW feature to configure and activate/deactivate (using (RCFA and RCFD) the CFW DN on the Phantom TNs.

The RCFW feature on Phantom TNs operates as for standard analog (500/2500-type) telephones. The local and network RCFW features can be used to configure and activate/deactivate the CFW DN of Phantom TNs.

The Phantom TN feature uses a Default Call Forward (DCFW) DN. If call forward is not active on the Phantom TN, all calls to the Phantom TN DN are routed to the DCFW DN.

The Phantom TN feature modifies the RCFW feature so that if CFW is not active on the Phantom TN, and the CFW DN entered in the RCFV operation matches the DCFW DN, confirmation tone is returned to the RCFV user; if the CFW DN entered does not match the CDFW DN, overflow is returned.

This change to the set-based RCFV operation is applicable to the network RCFV operation. The operation of this feature, network wide, requires no changes to the ISDN message passing for the network RCFV operation.

There is no Attendant RCFW operation which interacts with the DCFW DN of Phantom TNs.

Hot Line

Hot Line does not support Phantom TNs.

Copyright © 1994–2007, Nortel Networks
Nortel Networks Confidential

Call Forward, Internal Hunting, Manual Line Service, Multiple Appearance, Multiple Appearance Directory Number, Redirection Prime, Station Category Index

These features cannot be enabled on a Phantom TN.

DPNSS1 Diversion

If an incoming call to a Phantom TN contains a DIVERSION BY-PASS REQUEST, Call Forward All Calls applies.

Meridian Link

Phantom TNs cannot be used for origination and termination of calls. AST Class of Service is not allowed on Phantom TNs. With the Telelink Mobility Switch feature, a separate type of TN can be used by Meridian Link AST applications.

Meridian Mail and CallPilot

Phantom DNs are treated like other DNs; a Phantom DN can have a mailbox.

Network Ring Again

The Network Ring Again (NRAG) feature is supported for a Phantom TN with Default Call Forward (DCFW) to an internal telephone. When the called party becomes idle, the originating caller receives a "set-free" notification. The originating party then presses the Ring Again key, and the DN of the Phantom TN is dialed.

Network Ring Again is not supported for Second Level Default Call Forward or Default Call Forward to an external telephone.

Override

Call Forward cannot be overridden on Phantom TNs. The user hears overflow tone, if they attempt Override.

Recorded Announcement for Calls Diverted to External Trunks

If a Phantom TN is forwarded to an external outgoing CO route and the Recorded Announcement for Calls Diverted to External Trunks feature is configured for this route, the calling party that is forwarded, due to the Phantom TN feature, hears a recorded announcement.

Remote Call Forward

If Remote Call Forward is to be used in conjunction with Phantom TNs, then the Phantom TNs must be configured with the Call Forward All Calls (CFW) feature.

Copyright © 1994–2007, Nortel Networks
Nortel Networks Confidential

Ring Again on No Answer

Although Ring Again on No Answer can be applied to a Phantom DN, it is not recommended. Because a Phantom DN cannot be active or busy, the caller is not notified when the Phantom DN's forward DN does not answer.

Secretarial Filtering

If a Phantom TN is call forwarded to an existing telephone, and that telephone is programmed to call the DN on the Phantom TN, the call receives DCFW treatment.

Set-Based Administration Enhancements

Set-Based Administration supports making changes to Phantom TNs with the exception of changing Hunt DNs, because Phantom TNs cannot have Hunt DNs.

Virtual Office

See M3900 (Single Site) Virtual Office section for more information.

Feature packaging

The Phantom Terminal Numbers (PHTN) feature is available as package 254.

Using Remote Call Forwarding (RCFW) with Phantom TNs requires Flexible Feature Codes (FFC) package 139.

Feature implementation

Task summary list

The following is a summary of the tasks in this section:

1. "LD 17" (page 329)

   Configure a Phantom loop.

2. "LD 97" (page 330)

   Configure a Phantom superloop.

3. "LD 10" (page 330)

   Define a TN for the Phantom loop.

LD 17

Prompt	Response	Description
REQ	CHG	Change.
TYPE	CEQU	Common Equipment parameters for large systems.

Copyright © 1994–2007, Nortel Networks
Nortel Networks Confidential

Prompt	Response	Description
- TERM	N0-N159	Single density local terminal loop; precede loop number with "N" to create a Phantom loop; precede with an "X" to remove a terminal loop.
- TERD	N0-N159	Double density local terminal loop; precede loop number with "N" to create a Phantom loop; precede with an "X" to remove a terminal loop.
- TERQ	N0-N159	Quadruple density local terminal loop; precede loop number with "N" to create a Phantom loop; precede with an "X" to remove a terminal loop.

LD 97

Prompt	Response	Description
REQ	CHG	Change.
TYPE	SUPL	Superloop data.
SUPL	N0-N156	Superloop numbers in multiples of four
	N96-N112	In multiples of four (Small Systems).
		Precede loop number with "N" to create a Phantom loop; precede with an "X" to remove a terminal loop.
		Phantom TNs can use loops 0-159 for Large Systems. Phantom TNs on Small Systems are restricted to card slots 61-99 (which convert to superloops 96-112).

LD 10

Prompt	Response	Description
REQ	NEW, CHG	Add, or change.
TYPE	500	Telephone type.
TN		Terminal Number; if the loop is a Phantom loop, "PHANTOM" is echoed to the technician.
	l s c u	Format for Large System and CS 1000E system, where l = loop, s = shelf, c = card, u = unit.
	c u	Format for Small System and Media Gateway 1000B where c = card and u = unit.
DN	xxx...x	Directory Number; must be a Single Appearance DN
CLS	aaaa	Class of Service options, which cannot include AGTA, CCSA, MNL, or LPA.
FTR	DCFW ll xxx...x	Default DCFW length (ll) and default CFW DN xxx...x (up to 23 digits).

Copyright © 1994–2007, Nortel Networks
Nortel Networks Confidential

Feature operation

Operation of this feature with Call Forwarding is described below.

1. A call is directed to a Phantom DN.
2. If the Phantom DN is Call Forward Activated, the call is directed to its CFW DN.
3. If the Phantom DN is Call Forward Deactivated, the call is directed to its Default CFW DN.

Copyright © 1994–2007, Nortel Networks
Nortel Networks Confidential

Copyright © 1994–2007, Nortel Networks
Nortel Networks Confidential

Position Busy with Call on Hold

Contents

This section contains information on the following topics:

"Feature description" (page 333)

"Operating parameters" (page 333)

"Feature interactions" (page 333)

"Feature packaging" (page 334)

"Feature implementation" (page 334)

"Feature operation" (page 334)

Feature description

This feature prevents an attendant from going into Position Bushy when a call on a Loop Key is on hold, or the source or destination of an active loop key is excluded from the call.

Operating parameters

There are no operating parameters associated with this feature.

Feature interactions

Attendant Forward No Answer

If an attendant with a call on hold does not answer an Attendant Forward No Answer call within a customer-defined time, the console is not placed in Position Busy.

Scheduled Access Restriction

If an attendant in a Scheduled Access Restriction group has a call on hold, the attendant is not placed in Position Busy when the group enters an off-hour period.

Copyright © 1994–2007, Nortel Networks
Nortel Networks Confidential

Feature packaging

This feature is packaged under International Supplementary Features (SUPP), package 131.

Feature implementation

LD 15 - Configure Position Busy with Call on Hold.

Prompt	Response	Description
REQ:	NEW CHG	Add, or change.
TYPE:	FTR	Features and options.
...		
- OPT	(BOHA) BOHD	Position Busy with Calls on Hold (allowed) denied.

Feature operation

With Position Busy with Calls on Hold Allowed, (BOHA) configured in LD 15, normal operation is not changed when an attendant with a call on hold presses the POS BUSY key. The attendant goes into Position Busy.

With Position Busy with Calls on Hold Denied (BOHD) configured in LD 15, when an attendant with a call on hold presses the POS BUSY key the system will react as if nothing has happened.

In addition, if the attendant with a call on hold presses the **POS BUSY** key, the system remains in day service (even if supposed to go in Night Service).

Copyright © 1994–2007, Nortel Networks
Nortel Networks Confidential

Predictive Dialing

Contents

This section contains information on the following topics:

"Feature description" (page 335)

"Operating parameters" (page 336)

"Feature interactions" (page 337)

"Feature packaging" (page 338)

"Feature implementation" (page 338)

"Feature operation" (page 348)

Feature description

With Predictive Dialing, the process of making outgoing calls to customers is automated for Automatic Call Distribution (ACD) agents. Host applications can request the system to make calls using autodialers or phantom TNs. When a call is answered, the application sends a request to the switch to transfer the call to a live agent. The call needs to be transferred before, or while, the customer starts speaking in order to prevent customers from abandoning the call if they think no one has answered them. This transfer was previously performed by Meridian Link in two steps by sending two separate Application Module Link (AML) messages to initiate and then complete the transfer. This operation takes a minimum of 400 to 450 milliseconds for the system to process.

The Fast Transfer feature 21 allows applications residing on the Application Module (AM) or host computers to transfer a call in one step (a blind transfer) by sending only one AML message (Fast Transfer) to the switch, thereby saving approximately 200 to 250 milliseconds of transfer time. This Fast Transfer feature is useful for predictive applications to make outbound calls and then quickly transfer them once the customer has answered (that

Copyright © 1994–2007, Nortel Networks
Nortel Networks Confidential

is, live voice has been detected). Fast Transfer can also be used in a non-predictive dialing environment. Applications that want to perform a blind transfer can now execute it more quickly.

The Predictive Dialing feature enables applications residing on the AM or host computers to send a combined Make Call and Transfer request on behalf of an autodialer or Phantom TN. As soon as live voice is detected by third-party equipment, or notification is sent to the switch indicating the call has been answered (for example, answer supervision), the application can send the Fast Transfer request to the switch immediately transferring the call to an ACD agent.

Operating parameters

When Phantom TNs/DNs are used to originate calls as part of a predictive dialing operation, Small Systems are not supported.

To provide phantom TN locations, CS 1000E systems must have an IP Media Gateway (IPMG) registered to the call server. You can configure the redialer on any unused slot of the superloop to which the IPMG belongs. However, it is strongly recommended that you configure the redialer on slot 5 or 6, as these slots are not used as physical slots in the cabinet.

Attendant consoles and Basic Rate Interface sets cannot initiate Fast Transfer or predictive calls.

The system does not support live voice answer detection. Live voice answer detection is currently achieved through third-party vendor equipment.

If phantom TNs/DNs are used, this development only supports calls and Fast Transfers originated by phantom TNs/DNs which are defined as Associate set (AST) Meridian 1 proprietary telephones on a phantom loop.

Data calls are not supported.

For outbound trunk calls, if no third-party equipment is used to detect live voice answer, the switch will have to depend on receiving answer supervision before transferring the call to the target DN.

If voice detection is used, the application will not be able to Fast Transfer the call before the call is established (that is, answer notification is received).

The application will not be able to complete the transfer when Fast Transferring over a trunk.

Copyright © 1994–2007, Nortel Networks
Nortel Networks Confidential

Not all analog trunks support answer supervision. Not all digital trunks provide answer supervision. For trunks that do not support answer supervision, the End-of-Dialing (EOD) timer will be used to trigger the transfer.

Receiving answer supervision depends on the accuracy of signals returned by the external network. Answer supervision may be received before an EOD timeout, pseudo answer supervision may also be received due to an EOD timeout. A pseudo answer supervision may be received if the far-end has an EOD timeout even though the local switch has answer supervision configured.

The AML requires an Enhanced Serial Data Interface (ESDI) card or Multi-purpose Serial Data Link (MSDL) card (NT6D80AA) on the switch. If a Small System is used, a Serial Data Interface/D-Channel (SDI/DCH) card (NTAK02AA) is required to configure the ESDI port.

The AML connection requires an RS232 cable.

Meridian Link software is required for host applications to utilize this feature.

Feature interactions

Call Hold Deluxe, Call Hold Permanent

If an established call is put on hold by the set initiating the Fast Transfer, the switch will not be able to transfer the call. The switch can only transfer a call if it is in the established state.

Call Transfer by Meridian 1 proprietary telephone

The application sends the Fast Transfer request on behalf of a Meridian 1 proprietary telephone, and then the switch initiates and completes the transfer immediately which is similar to a normal call transfer from a Meridian 1 proprietary telephone.

In a Predictive Dialing scenario where the autodialer (originating DN) is a Meridian 1 proprietary telephone, the Make Call message sent by the application to the switch to make a call on behalf of the Meridian 1 proprietary telephone, and then the call transfer call, will interact with the Meridian 1 proprietary telephone Call Transfer feature. The autodialer is configured with Class of Service TRN so that the switch can transfer the call to the target destination.

Call Transfer by Analog (500/2500-type) Telephone

The application sends the Fast Transfer request on behalf of an analog (500/2500-type) telephone. The switch will then initiate and complete the transfer in one step.

Copyright © 1994–2007, Nortel Networks
Nortel Networks Confidential

In a predictive dialing scenario, the application will send the Make Call request on behalf of the autodialer (analog (500/2500-type) telephone) to have the switch make the call, and then transfer the call when the switch receives the Fast Transfer message. The autodialer needs to be configured with Classes of Service Dial Pulse (DIP) and Transfer Allowed (XFA) for 500 sets, or with Classes of Service Digitone (DTN) and XFA for 2500 sets.

Command and Status Link

The Command and Status Link, also known as the AML, is the link on which the messages for the Predictive Dialing feature flow between the switch and an Application Module. The CON/FastTransfer is an AML message.

Trunks

Only certain trunks will support answer supervision. The End-of-Dialing timer will be used for trunks that do not support answer supervision.

Feature packaging

There are no new software packages required for the Predictive Dialing feature. However, the following packages are required to utilize the feature:

- Application Module Link (IAP3P) package 153, and
- Meridian Link Module (MLM) package 209 if the Meridian Link Module is involved.

Feature implementation

Task summary list

The following is a summary of the tasks in this section:

1. "LD 17 " (page 339)

   Configure the ESDI port to the Meridian Link Module.

2. "LD 17" (page 340)

   - Configure the MSDL port to the Meridian Link Module.

3. "LD 10" (page 341)

   Configure non-ACD analog (500/2500-type) telephones as autodialers.

4. "LD 11" (page 342)

   Configure non-ACD Meridian 1 proprietary telephones as autodialers.

5. "LD 23" (page 342)

   - Configure ACD groups.

6. "LD 10" (page 343)

   Configure ACD analog (500/2500-type) telephones as autodialers.

7. "LD 11" (page 343)

Copyright © 1994–2007, Nortel Networks
Nortel Networks Confidential

Configure ACD Meridian 1 proprietary telephones as autodialers.

8. "LD 23" (page 344)

   Configure a Control DN (CDN - default mode).

9. "LD 23" (page 345)

   - Configure a Control DN (CDN - controlled mode).

10. "LD 14" (page 345)

    Define answer supervision for trunks.

11. "LD 16 " (page 346)

    Configure the End-of-Dialing timer.

12. "LD 17" (page 346)

    Configure a phantom loop and phantom DN.

13. "LD 97" (page 347)

    Configure a superloop.

14. "LD 11" (page 347)

    Configure ITNA and DGRP for AST Meridian 1 proprietary set.

This feature does not require any changes to the overlays. The following illustrates the configuration requirements to set up this feature. Most of these requirements are used by existing Meridian Link and Application Module applications.

LD 17

Prompt	Response	Description
REQ	CHG	Change.
TYPE	ADAN	All input/output devices (includes D-Channels)
- CTYP	ESDI	Card Type. ESDI card.
- DNUM	x	Device number is x.
- DES	NEWTTY	Description of this I/O device.
- BPS	19200	Baud rate is 19,200 bits per second.
- CLOK	INT	Internal clocking.
- IADR	3	HDLC protocol individual address.
- RADR	1	HDLC protocol remote address.
TYPE	PARM	System parameters
...		

Copyright © 1994–2007, Nortel Networks
Nortel Networks Confidential

Prompt	Response	Description
- CSQI	(20)	Maximum call registers for Command and Status Link (CSL) input queues (use the default, unless the system requires otherwise).
- CSQO	(20)	Maximum call registers for CSL output queues (use the default, unless the system requires otherwise).
TYPE	VAS	Value Added Server
...		
- VSID	y	Server ID y.
- AML	x	Port used by AML defined earlier in this overlay.
- - SECU	YES	Security on for Meridian Link.
- - INTL	x	Length of time interval (five-second increments) (for example, 2).
- - MCNT	x	Threshold for number of messages per time interval (for example, 100). MCNT must be reduced to 300 if CCR and/or Meridian Link are used on Large Systems.
- - CONF	DIR	Direct link configuration.

LD 17

Prompt	Response	Description
REQ	CHG	Change.
TYPE	ADAN	All input/Output devices (includes D-Channels)
...		
- CTYP	MSDL	Card Type. MSDL card.
- DNUM	y	Device number is y. Refers to the device number on the MSDL card.
- DES	MERIDIAN_LINK	Description of this I/O device.
- BPS	19200	Baud rate is 19,200 bits per second.
- PARM	RS232 DCE	Parameters for interface and transmission mode. DTE/DCE setting.
- IADR	3	HDLC protocol individual address.
- RADR	1	HDLC protocol remote address.
TYPE	PARM	Gate opener.
...		
- CSQI	(20)	Maximum call registers for CSL input queues (use the default, unless the system requires otherwise).

Copyright © 1994–2007, Nortel Networks
Nortel Networks Confidential

Prompt	Response	Description
- CSQO	(20)	Maximum call registers for CSL output queues (use the default, unless the system requires otherwise).
TYPE	VAS	Value Added Server
...		
- VSID	y	Server ID y.
- AML	x	Port used by AML x, defined earlier in this overlay.
- - SECU	YES	Security on for Meridian Link.
- - INTL	x	Length of time interval (five-second increments) (for example, 2).
- - MCNT	x	Threshold for number of messages per time interval (for example, 100). MCNT must be reduced to 300 if CCR and/or Meridian Link are used on Large Systems.
- - CONF	DIR	Direct link configuration.

LD 10

Prompt	Response	Description
REQ	CHG	Change.
TYPE	500	Telephone type.
...		
TN		Terminal number
	l s c u	Format for Large System and CS 1000E system, where l = loop, s = shelf, c = card, u = unit.
	c u	Format for Small System and Media Gateway 1000B where c = card and u = unit.
...		
CUST	xx	Customer number, as defined in LD 15
...		
DN	x...x	Internal Directory Number.
AST	YES	Associate set assignment. The internal DN is an AST.

Copyright © 1994–2007, Nortel Networks
Nortel Networks Confidential

Prompt	Response	Description
CLS	XFA	Transfer allowed.
CLS	DIP	Dial Pulse Class of Service for 500 sets (use DTN for 2500 sets).

LD 11

Prompt	Response	Description
REQ	NEW	New.
TYPE	a...a	Telephone type. Type **?** for a list of possible responses.
TN		Terminal number
	l s c u	Format for Large System and CS 1000E system, where l = loop, s = shelf, c = card, u = unit.
	c u	Format for Small System and Media Gateway 1000B where c = card and u = unit.
...		
CUST	xx	Customer number, as defined in LD 15
...		
KLS	1-7	Number of key lamp strips, typically one.
...		
AST	xx yy	Key number for Associate set DN assignment.
...		
KEY	xx SCR yyyy	Key number, Single Call Ringing, DN.
KEY	xx TRN	Key number, Call Transfer.
KEY	xx AO6	Key number, six-party conference.
KEY	xx SCR yyyy	Key number, Single Call Ringing, second DN.
CLS	xx RLS	Key number, Release.

LD 23

Prompt	Response	Description
REQ	NEW	New.
TYPE	ACD	Automatic Call Distribution data block.
CUST	xx	Customer number, as defined in LD 15
ACDN	xxxx	ACD Directory Number.
...		

Copyright © 1994–2007, Nortel Networks
Nortel Networks Confidential

Prompt	Response	Description
ISAP	YES	Integrated Services Application Protocol. ACD DN uses Meridian Link (ISDN/AP) messaging.
- VSID	0-15	Value Added Server ID. This Server ID used for Meridian Link messaging must match the VSID defined in LD 17.

LD 10

Prompt	Response	Description
REQ	NEW	New.
TYPE	500	Telephone type.
...		
TN		Terminal number
	l s c u	Format for Large System and CS 1000E system, where l = loop, s = shelf, c = card, u = unit.
	c u	Format for Small System and Media Gateway 1000B where c = card and u = unit.
CUST	xx	Customer number, as defined in LD 15
...		
DN	x...x	Internal Directory Number.
AST	YES	Associate set assignment. The internal DN is an AST.
...		
CLS	AGTA	ACD agent allowed Class of Service.
CLS	DIP	Dial Pulse Class of Service for 500 sets (use DTN for 2500 sets).
...		
AACD	YES	ACD telephone is an Associate set.
FTR	ACD xxxx yyyy	ACD DN and the ACD position ID.

LD 11

Prompt	Response	Description
REQ	NEW	New.
TYPE	a...a	Telephone type. Type **?** for a list of possible responses.
TN		Terminal number
	l s c u	Format for Large System and CS 1000E system, where l = loop, s = shelf, c = card, u = unit.

Copyright © 1994–2007, Nortel Networks
Nortel Networks Confidential

Prompt	Response	Description
	c u	Format for Small System and Media Gateway 1000B where c = card and u = unit.
...		
CUST	xx	Customer number, as defined in LD 15
...		
KLS	1-7	Number of key lamp strips, typically one.
...		
AST	xx yy	Key numbers for Associate set DN assignment.
...		
KEY	0 ACD xxxx yyyy	Key 0, ACD, ACD DN, and agent's ID.
KEY	xx MSB	Key number, Make Set Busy.
KEY	xx NRD	Key number, Not Ready.
KEY	xx TRN	Key number, Call Transfer.
KEY	xx AO6	Key number, six-party conference.
KEY	xx SCR yyyy	Key number, Single Call Ringing, second DN.
CLS	xx RLS	Key number, Release.

LD 23

Prompt	Response	Description
If the application wants to transfer a call to a target CDN, a CDN must be configured. CDNs can be in default or controlled mode.		
REQ	NEW	New.
TYPE	CDN	Control Directory Number data block.
CUST	xx	Customer number, as defined in LD 15
CDN	xxxx	DN of the Control DN (counts as an ACD DN).
...		
DFDN	xxx...x	Default destination ACD DN.
CEIL	0-(2047)	CDN ceiling value. CEIL limits the number of unanswered calls a CDN can have at its default ACD DN at a time. Enter the maximum value (the default).
...		

Copyright © 1994–2007, Nortel Networks
Nortel Networks Confidential

Prompt	Response	Description
RPRT	YES	Report Control.
CNTL	NO	NO sends CDN calls to the Default ACD DN.

LD 23

Prompt	Response	Description
When a CDN is in controlled mode, the application can have control of the call once it enters the CDN.		
REQ	NEW	New.
TYPE	CDN	Control Directory Number data block.
CUST	xx	Customer number, as defined in LD 15
CDN	xxxx	DN of the Control DN (counts as an ACD DN).
...		
DFDN	xxx...x	Default destination ACD DN.
CEIL	0-(2047)	CDN ceiling value. CEIL limits the number of unanswered calls a CDN can have at its default ACD DN at a time. Enter the maximum value (the default).
...		
RPRT	YES	Report Control.
CNTL	YES	Control DN is in control (the default).
VSID	0-15	Value Added Server ID. Server ID used for Meridian Link messaging (defined in LD 17).
HSID	0-15	Host Link ID used when Customer Controlled Routing and Meridian Link applications are both running.

LD 14

Prompt	Response	Description
If the application wants to transfer outgoing calls based on answer supervision, answer supervision must be configured. If answer supervision is not configured, the End-of-Dialing timer will be used as a trigger for the system to transfer the call.		
REQ	CHG	Change.
TYPE	aaa	Trunk type where: aaa = CAA, CAM, COT, CSA, DID, FEX, FGDT, IDA, TIE, or WAT.
TN		Terminal number
	l s c u	Format for Large System and CS 1000E system, where l = loop, s = shelf, c = card, u = unit.
	c u	Format for Small System and Media Gateway 1000B where c = card and u = unit.

Copyright © 1994–2007, Nortel Networks
Nortel Networks Confidential

Prompt	Response	Description
...		
SUPN	YES	Answer and disconnect supervision are required.

LD 16

Prompt	Response	Description
If the application is using the End-of-Dialing timer to transfer outbound calls, the timer must be configured in the Route Data Block.		
REQ	CHG	Change.
TYPE	RDB	Route Data Block
...		
CNTL	YES	Change controls or timers.
- TIMR	EOD 128-(13952)- 32640	End-of-Dialing timer in milliseconds. The default is 13952 milliseconds.

LD 17

Prompt	Response	Description
In order to originate calls from phantom TNs/DNs, a phantom loop must first be configured and a physical loop card must be installed. A phantom DN can then be configured as part of a specific device group. After configuration changes to the loop card, the system must be reinitialized for the changes to take effect.		
REQ	CHG	Change.
TYPE	CEQU	Common Equipment parameters
...		
- TERM	0-159 [X] 0-159 [C] 0-159	Single density local terminal loops. Precede loop number with X to remove. Precede loop number with C to create a phantom loop.
- TERD	0-159 [X] 0-159 [C] 0-159	Double density local terminal loops. Precede loop number with X to remove. Precede loop number with C to create a phantom loop.
- TERQ	0-159 [X] 0-159	Quad density local terminal loops. Precede loop number with X to remove.

Copyright © 1994–2007, Nortel Networks
Nortel Networks Confidential

Prompt	Response	Description
	[C] 0-159	Precede loop number with C to create a phantom loop.

LD 97

Prompt	Response	Description
If a superloop is used, the phantom loop is configured in this overlay (except in CS 1000E stystems). CS 1000E systems use IPMG superloops.		
REQ	CHG	Change.
TYPE	SUPL	Superloop parameters.
SUPL	0-156 [X] 0-156 [C] 0-156	Superloop number in multiples of four. Precede superloop number with X to remove. Precede superloop number with C to create a phantom superloop.

LD 11

Prompt	Response	Description
After configuring the phantom loop, an AST Meridian 1 proprietary set can be designated to a specific device group which can be controlled by applications. Therefore, when an application wants to originate a call on behalf of an idle TN, it can use a phantom TN. This idle TN is an AST Meridian 1 proprietary set which is defined on a phantom loop. There is no upper limit on the number of devices per group defined by the Phantom DN. However, there is an upper limit on the number of TNs that can be defined for the loop card. This number is dependent on the density of the loop card. The ITNA and DGRP prompts must be configured as follows:		
REQ:	NEW	New.
TYPE:	a...a	Telephone type. Type **?** for a list of possible responses.
TN		Terminal number
	l s c u	Format for Large System and CS 1000E system, where l = loop, s = shelf, c = card, u = unit.
	c u	Format for Small System and Media Gateway 1000B where c = card and u = unit.
...		
CDEN		Card density.
	SD	Single density.
	DD	Double density.
	4D	Quad density.
DES	phanDN	One-to-six character Office Data Administration System (ODAS) Station Designator.
CUST	xx	Customer number, as defined in LD 15
...		

Copyright © 1994–2007, Nortel Networks
Nortel Networks Confidential

Prompt	Response	Description
CLS	NDD	No digit display is recommended if configuring phantom devices.
CLS	(DNDD)	Dialed Name Display denied is recommended if configuring phantom devices.
...		
AST	00	Key 0 is AST.
IAPG	(0)-15	Meridian Link Unsolicited Status Message (USM) group. These groups determine which status messages are sent for an AST set. The default 0 sends no messages, whereas Group 1 sends all messages.
ITNA	(NO) YES	Idle TN for Third Party Application. Set ITNA to YES for Phantom TN calls.
DGRP	(1)-5	Device Group with which phantom TNs are associated.
...		
KEY	xx SCR yyyy	Key number, Single Call Ringing, DN.
CLS	xx RLS	Key number, Release.

Feature operation

Applications invoke the Fast Transfer feature by sending a Fast Transfer request message to the switch. No specific operating instructions are required to use this feature.

Copyright © 1994–2007, Nortel Networks
Nortel Networks Confidential

Pretranslation and System Speed Call Enhancement

Contents

This section contains information on the following topics:

"Feature description" (page 349)

"Operating parameters" (page 352)

"Feature interactions" (page 352)

"Feature packaging" (page 353)

"Feature implementation" (page 353)

"Feature operation" (page 353)

Feature description

Pretranslation and System Speed Call Enhancement provides the option to allow or deny Pretranslation when a System Speed Call list entry is dial accessed.

The existing Pretranslation feature allows the creation of a flexible dialing plan by using Speed Call lists which are modified for pretranslation. The dialing capabilities and/or restrictions of each Pretranslation group are defined in Pretranslation Tables.

The existing System Speed Call feature allows abbreviated dialing and also allows users to temporarily override the set's Class of Service, Trunk Group Access Restrictions (TGARs), and Code Restrictions.

Analog (500/2500-type) sets, Meridian 1 proprietary sets, and attendant consoles can activate System Speed Call by using a Special Prefix (SPRE) or Flexible Feature Code (FFC).

For further information pertaining to the existing Pretranslation and System Speed Call features, see the feature modules in this guide.

Copyright © 1994–2007, Nortel Networks
Nortel Networks Confidential

Table 24 "Example of Pretranslation Table" (page 350) and Table 25 "Example of System Speed Call List" (page 350) are examples of a Pretranslation Table and a System Speed Call list respectively.

Table 24
Example of Pretranslation Table

List entry	Corresponding DN or Code	Function
0	space <CR>	Pass Pretranslation digit unchanged
1	space <CR>	Pass Pretranslation digit unchanged
2	space <CR>	Pass Pretranslation digit unchanged
3	space <CR>	Pass Pretranslation digit unchanged
4	space <CR>	Pass Pretranslation digit unchanged
5	space <CR>	Pass Pretranslation digit unchanged
6	space <CR>	Pass Pretranslation digit unchanged
7	8000	Convert to Route Access Code 8000
8	***	Delete Pretranslation (first dialed) digit, pass remaining digits unchanged
9	*	Block the call

Table 25
Example of System Speed Call List

List entry	Corresponding DN
00	7182
01	122455678
...	...

In Table 24 "Example of Pretranslation Table" (page 350), if the first dialed digit is 0 to 6, Pretranslation passes all of the digits and leaves them unchanged. If the first dialed digit is 7, Pretranslation changes digit 7 to Route Access Code 8000. If the first dialed digit is 8, Pretranslation deletes the first dialed digit and passes the remaining digits unchanged. If the first dialed digit is 9, Pretranslation blocks the call.

Copyright © 1994–2007, Nortel Networks
Nortel Networks Confidential

To dial access System Speed Call lists, the user dials:

1. SPRE, as defined in LD 15
2. System Speed Call Feature Code - 73
3. System Speed Call list entry number

If the system is equipped with Flexible Feature Codes, the user dials:

1. FFC, as defined in LD 57.
2. System Speed Call list entry number

With the existing Pretranslation and System Speed Call features, when Dial Access occurs, Pretranslation is performed on the first dialed digit of the Special Prefix (SPRE) or Flexible Feature Code (FFC). The first digit of the digits stored in the System Speed Call list entry is then also pretranslated.

The Pretranslation and System Speed Call Enhancement introduces the BPSS prompt in LD 15. This prompt provides the option to allow or deny pretranslation on the System Speed Call list entry when dial accessed. If BPSS is set to YES in LD 15, Pretranslation is blocked. Therefore, only the first dialed digit is pretranslated. The first digit of the digits stored in the System Speed Call list entry is not pretranslated.

To follow are examples of Pretranslation and System Speed Call functionalities when Pretranslation is blocked/not blocked. Table 24 "Example of Pretranslation Table" (page 350) and Table 25 "Example of System Speed Call List" (page 350) are considered for these examples. It is assumed that the SPRE method of dialing is used and that the user has the following configuration:

- Special Prefix (SPRE) code - **1**
- System Speed Call Feature Code - **73**

BPSS = NO

With dial access and the BPSS option set to NO in LD 15, Pretranslation is not blocked. Therefore, the existing Pretranslation functionality is retained.

When the user dials 1+73+00, Pretranslation occurs twice. It occurs once on the first dialed digit (1) and once again on the first digit of the digits stored in the System Speed Call list entry (7 of 7182).

When the user dials SPRE + 73 + 00, the first digit of the digits stored in the System Speed Call list entry (7 of 7182) is converted to DN 8000. In this example, DN 8000 is a Trunk Route Access Code; therefore, the call goes out on that route, and the digits 182 are outpulsed.

Copyright © 1994–2007, Nortel Networks
Nortel Networks Confidential

BPSS = YES

With dial access and the BPSS option set to YES in LD 15, Pretranslation is blocked. Therefore, the new Pretranslation functionality is in effect.

When the user dials 1+73+00, the first dialed digit (1) is pretranslated. However, the first digit of the digits stored in the System Speed Call list entry (7 of 7182) is not pretranslated.

When the user dials SPRE + 73 + 00, the list entry number is converted to DN 7182. When BPSS = YES, Pretranslation is blocked at this point. Therefore, the first digit of the digits stored in the System Speed Call list entry (7 of 7182) is not converted to the corresponding DN (8000) in the Pretranslation Table.

Operating parameters

To allow or deny Pretranslation on a System Speed Call list entry when dial accessed, the BPSS prompt must be defined in the Customer Data Block.

When Pretranslation is disabled (PREO = 0) in the Customer Data Block, BPSS is prompted but does not take effect. Therefore, the current functionality is retained.

With Dial Access and the BPSS option set to YES in the Customer Data Block, only the first dialed digit is pretranslated. The first digit of the digits stored in the System Speed Call list entry are not pretranslated.

With Dial Access and the BPSS option set to NO in the Customer Data Block, the existing operation is retained.

The functionality of the Speed Call (Dial Access and Key Access) and System Speed Call (Key Access only) features is not changed by this enhancement.

The operation of Key Access to System Speed Call with Pretranslation is not modified with this feature.

Existing dialing plans are affected when the Pretranslation and System Speed Call Enhancement is configured.

The preprogrammed DN in the System Speed Call list can be internal or external to the system.

Feature interactions

There are no new feature interactions as a result of this enhancement.

Copyright © 1994–2007, Nortel Networks
Nortel Networks Confidential

Feature packaging

The following packages are required for Pretranslation and System Speed Call Enhancement:

- System Speed Call (SSC) package 34
- Pretranslation (PXLT) package 92

Feature implementation

The Pretranslation and System Speed Call features must be configured as per the existing implementation procedures. See the Pretranslation feature module and the System Speed Call feature module in this guide.

CAUTION
Care must be taken when implementing Pretranslation and System Speed Call Enhancement, as existing dialing plans will be impacted when BPSS = YES. In this case, the existing Pretranslation functionality is changed, and the entire Customer group of dial access System Speed Call users is affected.

LD 15 - Allow or deny blocking of Pretranslation on list entry when dial accessed.

Prompt	Response	Description
REQ:	CHG	Change existing data.
TYPE:	FTR	Features and options.
CUST		Customer number
	0-99	Range for Large System and CS 1000E system.
	0-31	Range for Small System and Media Gateway 1000B.
...		
PREO	1	Pretranslation Option enabled.
		0 = Pretranslation Option disabled (default).
BPSS	YES	Block Pretranslation on System Speed Call lists when dial accessed.
		NO = Do not block Pretranslation on System Speed Call lists when dial accessed (default).

Feature operation

To dial access System Speed Call lists, the user

Copyright © 1994–2007, Nortel Networks
Nortel Networks Confidential

Step	Action
1	Lifts the handset of the analog (500/2500-type) set, Meridian 1 proprietary set, or attendant console
2	Dials the Special Prefix (SPRE) code, as defined in LD 15
3	Dials the System Speed Call Feature Code - **73**
4	Dials the System Speed Call list entry number

—End—

If the system is equipped with Flexible Feature Codes (FFCs), the user

Step	Action
1	Lifts the handset of the (500/2500-type) set, Meridian 1 proprietary set, or attendant console
2	Dials the Flexible Feature Code (FFC) for accessing System Speed Call, as defined in LD 57
3	Dials the System Speed Call list entry number

—End—

Copyright © 1994–2007, Nortel Networks
Nortel Networks Confidential

Pretranslation

Contents

This section contains information on the following topics:

"Feature description" (page 355)

"Operating parameters" (page 364)

"Feature interactions" (page 365)

"Feature packaging" (page 367)

"Feature implementation" (page 367)

"Feature operation" (page 370)

Feature description

In a business or hospitality environment, many communications situations can be simplified with a flexible dialing plan. Pretranslation lets you create such a plan by using Speed Call lists as Pretranslation Tables.

Some typical uses of Pretranslation are:

- room number to DN correlation
- partitioning of telephones by category, group, department, floor, building, room, or special service
- internal call restrictions
- expanded customer dialing capability

The dialing capabilities and/or restrictions of each Pretranslation group are defined in Pretranslation Tables. The tables are Speed Call lists modified for Pretranslation.

With Pretranslation, only the first dialed digit of a call is pretranslated. The translation choices are:

- **Pass** the digit as dialed with no changes

Copyright © 1994–2007, Nortel Networks
Nortel Networks Confidential

- **Replace** the first dialed digit with a specified substitute digit or digits, and pass the remaining digits unchanged
- **Delete** the first dialed digit and pass the remaining digits unchanged, or
- **Block** the call based on the first digit dialed.

The pretranslator must deal with all telephones, trunks, and consoles capable of delivering a dialed digit to the system digit processor. Each of these must be assigned to one of 255 Pretranslation groups. The groups are generally set up as follows:

- trunk and Direct Inward System Access (DISA) calls default to group 0
- attendant consoles default to group 1
- telephones and terminals default to group 0, but may be assigned to groups 2 to 254

When Pretranslation group 0 is configured, all sets are affected, as the XLST prompt in LDs 10 and 11 has a default value of 0. The XLST prompt associates a set with a specified Pretranslation group.

The dialing capabilities of each group are reflected by the codes stored against entries in the Pretranslation Table. The four possible codes are shown in Table 26 "Pretranslation Table" (page 356).

Table 26
Pretranslation Table

Code	Function
*	Block call.
***	Delete Pretranslation (first dialed) digit, pass remaining digits unchanged.
space <CR>	Pass Pretranslation digit unchanged.
xxxx...x	Pretranslate digit into xxxx...x, where: xxxx...x = replacement DN.

Only the first dialed digit is sent from the digit processor to the pretranslator. The pretranslator looks up the stored code for the dialed digit in the Pretranslation Table associated with the calling terminal, applies the treatment specified by the entry, and passes the result to the DN translator. From then on, the call is processed normally. Pretranslation of the call is finished at this point, unless call modification procedures, such as a Call Transfer, are involved.

Copyright © 1994–2007, Nortel Networks
Nortel Networks Confidential

Setting up dialing plans and Pretranslation Tables

Steps needed to set up Pretranslation:

Step	Action
1	Identify the customer numbering plan.
2	Determine access and restrictions for each Pretranslation calling group.
3	Determine dialing requirements and instructions for the Pretranslation calling groups and create a Pretranslation Table for each group.
4	Implement the feature.

—End—

A hotel has been chosen as a model to illustrate the principles of Pretranslation and how to set up Pretranslation. However, Pretranslation can be applied to many other business environments.

Table 27
Description of Pretranslation model

Hotel with 12 floors containing administrative offices, hotel services, and guest rooms.
Floor 1 – Lobby, gift shop, restaurants, and administrative offices.
Floor 2 – Meeting rooms, salon, and additional office space.
Floor 3 – Banquet rooms and health club.
Floors 4-12 – Guest rooms (floors 4-9 each have 50 rooms, floors 10-12 each have 25 suites).

Step 1 - Identify the numbering plan

The model hotel's numbering plan is shown in Table 28 "Numbering plan for model" (page 357).

Table 28
Numbering plan for model

Available numbers	Assigned to	Actual DNs used
0	Operator	0

Copyright © 1994–2007, Nortel Networks
Nortel Networks Confidential

Available numbers	Assigned to	Actual DNs used
1	Guest rooms on floor 10 Guest rooms on floor 11 Guest rooms on floor 12	1001-1026 1101-1126 1201-1226
2	Room service Cafe Restaurant Gift shop Health club Salon Housekeeping Bell Captain Valet Meeting rooms Administrative offices Security Front desk Lobby telephones Miscellaneous	2001 2002 2003 2004 2005 2006 2007 2008 2009 2100-2199 2300-2599 2700 2730 2750-2765 2800-2899
3	SPRE code	
4	unused	
5	unused	
6	Trunk access codes	620-635
7	Guest rooms on floor 4 Guest rooms on floor 5 Guest rooms on floor 6 Guest rooms on floor 7 Guest rooms on floor 8 Guest rooms on floor 9	7401-7451 7501-7551 7601-7651 7701-7751 7801-7851 7901-7951
8	unused	
9	BARS access codes	9

Step 2 - Determine access restrictions

Pretranslation calling groups and dialing restrictions are shown in Table 29 "Access and restrictions for model" (page 358).

Table 29
Access and restrictions for model

Group number	Type of station	Allowed access	Denied access

Copyright © 1994–2007, Nortel Networks
Nortel Networks Confidential

(XLST)			
0	Default for DISA trunks and telephones	Operator only	All except Operator
1	Guest rooms	Other guest rooms, hotel services, local and long distance, operator	Administrative telephones and direct trunk access
2	Lobby and courtesy telephones	Guest rooms, security, and the operator	Hotel services, administrative telephones, local and long distance, direct trunk access, and SPRE
3	Administrative A	Guest rooms, administrative telephones, direct trunk access, SPRE, operator, BARS access for local and long distance	Direct trunk access
4	Administrative B	Guest rooms, administrative telephones, SPRE, operator	Direct trunk access, BARS access for local and long distance

Step 3 - Determine dialing requirements and create Pretranslation Tables

Dialing instructions for Group 0 (zero) in this model are shown in Table 30 "Group 0 – Default for unassigned trunks and telephones" (page 359) and the corresponding Pretranslation Table is listed in Table 31 "Group 0 – Pretranslation Table (default)" (page 360). For an explanation of the groups used in this model, see Table 29 "Access and restrictions for model" (page 358).

Table 30
Group 0 - Default for unassigned trunks and telephones

Actual digits dialed	Desired destination
1	Operator
2	Operator
3	Operator
4	Operator
5	Operator

Copyright © 1994–2007, Nortel Networks
Nortel Networks Confidential

Actual digits dialed	Desired destination
6	Operator
7	Operator
8	Operator
9	Operator
0	Operator

Table 31
Group 0 - Pretranslation Table (default)

Digit	Code	Function	Destination
1	0	replace	Operator
2	0	replace	Operator
3	0	replace	Operator
4	0	replace	Operator
5	0	replace	Operator
6	0	replace	Operator
7	0	replace	Operator
8	0	replace	Operator
9	0	replace	Operator
0	space <CR>	pass	Operator

Dialing instructions for Group 1 in this model are shown in Table 32 "Group 1 – Guest dialing instructions for model" (page 360) and the corresponding Pretranslation Table is listed in Table 33 "Group 1 – Pretranslation Table (Guests)" (page 361).

Table 32
Group 1 - Guest dialing instructions for model

Actual digits dialed	Desired destination
1xxx	Guest rooms on floors 10-12
2	Security
3	SPRE (housekeeping staff for Room Status)
4	Front desk
51	Room Service
52	Cafe
53	Restaurant

Copyright © 1994–2007, Nortel Networks
Nortel Networks Confidential

Actual digits dialed	Desired destination
54	Gift shop
55	Health club
56	Salon
57	Housekeeping
58	Bell captain
59	Valet
7xxx	Guest rooms on floors 4-9
8	Long distance calls
9	Local calls
0	Operator

Table 33
Group 1 - Pretranslation Table (Guests)

Digit	Code	Function	Destination
1	space <CR>	pass	Guest rooms
2	2700	replace	Security
3	space <CR>	pass	SPRE
4	2730	replace	Front desk
5 (see Note)	200	replace	Guest services
6	*	block call	Not used
7	space <CR>	pass	Guest rooms
8	620	replace	Long distance calls
9	space <CR>	pass	Local calls
0	space <CR>	pass	Operator
When a guest dials 51 for room service, the digit "5" is translated to the entry "200" and the 1 is passed as is, resulting in the extension "2001."			

Dialing instructions for Group 2 in this model are shown inTable 34 "Group 2 - Lobby and courtesy telephone dialing instructions" (page 362) and the corresponding Pretranslation Table is listed in Table 35 "Group 2 – Pretranslation Table (lobby and courtesy telephones)" (page 362).

Copyright © 1994–2007, Nortel Networks
Nortel Networks Confidential

For an explanation of the groups used in this model, see Table 29 "Access and restrictions for model" (page 358).

Table 34
Group 2 - Lobby and courtesy telephone dialing instructions

Actual digits dialed	Desired destination
1xxx	Guest rooms on floors 10-12
2	Security
7xxx	Guest rooms on floors 4-9
0	Operator

Table 35
Group 2 - Pretranslation Table (lobby and courtesy telephones)

Digit	Code	Function	Destination
1	space <CR>	pass	Guest rooms
2	2700	replace	Security
3	*	block call	Not used
4	*	block call	Not used
5	*	block call	Not used
6	*	block call	Not used
7	space <CR>	pass	Guest rooms
8	*	block call	Not used
9	*	block call	Not used
0	space <CR>	pass	Operator

Dialing instructions for Group 3 in this model are shown in Table 36 "Group 3 – Administrative A dialing instructions for model" (page 363) and the corresponding Pretranslation Table is listed in Table 37 "Group 3 – Pretranslation Table (Administrative A)" (page 363).

Copyright © 1994–2007, Nortel Networks
Nortel Networks Confidential

For an explanation of the groups used in this model, see Table 29 "Access and restrictions for model" (page 358).

Table 36
Group 3 - Administrative A dialing instructions for model

Actual digits dialed	Desired destination
1xxx	Guest rooms on floors 10-12
2xxx	Administrative telephones
3	SPRE
7xxx	Guest rooms on floors 4-9
9	Local/long distance through BARS
0	Operator

Table 37
Group 3 - Pretranslation Table (Administrative A)

Digit	Code	Function	Destination
1	space <CR>	pass	Guest rooms
2	space <CR>	pass	Administrative telephones
3	space <CR>	pass	SPRE
4	*	block call	Not used
5	*	block call	Not used
6	*	block call	Not used
7	space <CR>	pass	Guest rooms
8	*	block call	Not used
9	space <CR>	pass	Local/long distance through BARS
0	space <CR>	pass	Operator

Dialing instructions for Group 4 in this model are shown in Table 38 "Group 4 – Administrative B dialing instructions for model" (page 364) and the corresponding Pretranslation Table is listed in Table 39 "Group 4 – Pretranslation Table (Administrative B)" (page 364).

Copyright © 1994–2007, Nortel Networks
Nortel Networks Confidential

For an explanation of the groups used in this model, see Table 29 "Access and restrictions for model" (page 358).

Table 38
Group 4 - Administrative B dialing instructions for model

Actual digits dialed	Desired destination
1xxx	Guest rooms on floors 10-12
2xxx	Administrative telephones
3	SPRE
7xxx	Guest rooms on floors 4-9
0	Operator

Table 39
Group 4 - Pretranslation Table (Administrative B)

Digit	Code	Function	Destination
1	space <CR>	pass	Guest rooms
2	space <CR>	pass	Administrative telephones
3	space <CR>	pass	SPRE
4	*	block call	Not used
5	*	block call	Not used
6	*	block call	Not used
7	space <CR>	pass	Guest rooms
8	*	block call	Not used
9	*	block call	Not used
0	space <CR>	pass	Operator

Operating parameters

Pretranslation Table codes are limited to the codes described on page 391.

User groups are limited to 255.

Each Pretranslation Table entry can be up to 31 characters long; however, it is recommended that a maximum of eight characters be used.

After Pretranslation, any previously loaded (but not pretranslated) digits are added to the end of the pretranslated digits. If the total number of digits exceeds 31, the excess digits will be truncated.

Copyright © 1994–2007, Nortel Networks
Nortel Networks Confidential

Each Pretranslation Table reduces the number of available Speed Call lists in the system.

Speed Call Controllers do not have access to Pretranslation Tables. Lists must be created and maintained through Service Change.

Before configuring a Pretranslation Data Block in LD 18, Pretranslation group 0 must be configured.

When Pretranslation is allowed in LD 15 (PREO = 1), in order for a pretranslation entry to be removed, Pretranslation must first be disabled in LD 15 (PREO = 0). The Pretranslation data block is then removed in LD 18. It is not possible to remove a single entry. The entire data block must be removed.

Feature interactions

Authorization Code Security Enhancement

The first digit dialed after a valid Authorization Code is sent to the pretranslator.

Automatic Redial

Automatic Redial (ARDL) can be activated on a number that has passed the Pretranslation process. However, on an ARDL call the Pretranslation process is not used.

Automatic Trunk Maintenance, Private Line Telset Messaging

Pretranslation cannot be used with these features.

Automatic Wake Up

When the Pretranslation feature is equipped with AWU, the actual DN, not the pretranslation DN, should be used when programming the AWU call request.

Call Detail Recording

If a number dialed is pretranslated, the translated digits appear in the Call Detail Recording (CDR) records, not the dialed digits.

Call Forward

The DN dialed-forwarded calls are pretranslated.

Charge Account, Forced

The first digit dialed after a valid Charge Account Code is sent to the pretranslator.

Copyright © 1994–2007, Nortel Networks
Nortel Networks Confidential

Controlled Class of Service, Enhanced

The DN used to program the Controlled Class of Service (CCOS) should be the actual DN before pretranslation. When programming CCOS, the DN entered is not pretranslated.

Digit Display

The Pretranslation digit is displayed as it was dialed, but if the call is put on hold, the digits of the pretranslated DN are displayed.

Digital Private Network Signaling System (DPNSS1)/Digital Access Signaling System (DASS2) Uniform Dialing Plan (UDP) Interworking

The Pretranslation feature is supported in a DPNSS1 UDP network. At the originating node, the first digit dialed of a call is pretranslated to trigger the look-up of the stored code for the dialed digit in the pretranslation table associated with the calling terminal.

Direct Inward System Access

Direct Inward System Access calls are automatically assigned XLST 0.

Direct Private Network Access

Digits automatically inserted by Direct Private Network Access Digit Insertion are pretranslated during call processing in the same manner as if the caller had manually dialed the digits.

Electronic Switched Network

The pretranslator is used with calls to HNPA, HLOC, and Home CDP locations.

Flexible Feature Codes

Flexible Feature Codes must be accessible through a Pretranslation Table entry in order for users to activate features in this manner.

The Flexible Feature Code (FFC) feature will not be affected if the FFC's begin with "*" or "#", since before translation begins if the first digit is an "*" or "#" pretranslation will not be done. If any digits follow the FFC code, the first of the digits that follows will be pretranslated.

Forced Charge Account

The first digit dialed after a valid Charge Account Code is sent to the pretranslator.

Meridian Hospitality Voice Services

Prior to Meridian Hospitality Voice Services (MHVS), the setup of calls using the Applications Module Link (AML) was not supported from telephones using the Pretranslation feature. With MHVS equipped, call setup using the AML is supported.

Copyright © 1994–2007, Nortel Networks
Nortel Networks Confidential

Meridian Link Calls

Pretranslation cannot function with Meridian Link calls if the Hospitality Voice Services (HVS) package is enabled.

Special Prefix

The SPRE code must be accessible through a Pretranslation Table entry in order for users to activate features in this manner.

Speed Call, System Speed Call

Entries must be accessible through a Pretranslation Table entry in order to place a speed call.

A Speed Call List number should be programmed to allow for Pretranslation. For example, if 9 pretranslates to 99 and you want to reach 99 nxx xxxx, you need to program the number in the Speed Call List as 9 nxx xxxx. When the Speed Call List is used, 9 nxx xxxx is pretranslated at call processing time to become 99 nxx xxxx.

User Selectable Call Redirection

If Pretranslation (package 92) is enabled, the digits entered as the redirection DN are pretranslated before they are stored. Note that no Pretranslation occurs when the redirection DNs are used in such call processing features as Hunting or CFNA, eliminating the possibility that the redirection DN is pretranslated twice.

Feature packaging

This feature is included in base system software.

Feature implementation

Task summary list

The following is a summary of the tasks in this section:

1. "LD 17" (page 368)

   Allocate sufficient Speed Call lists to be used as Pretranslation Tables.

2. "LD 18" (page 368)

   - Add or change a Speed Call list to be used for each Pretranslation calling group.

3. "LD 18 " (page 369)

   Add or change the Pretranslation data block, defining the calling group to Speed Call list correlation. This list must be configured before Pretranslation (PREO) is enabled in LD 15.

4. "LD 15" (page 369)

Copyright © 1994–2007, Nortel Networks
Nortel Networks Confidential

Activate Pretranslation and define calling groups to Speed Call list correlation.

5. "LD 10" (page 369)

   - Associate an Analog (500/2500-type) telephone with a Pretranslation group.

6. "LD 11" (page 370)

   - Associate a Meridian 1 proprietary telephone with a Pretranslation group.

LD 17

Prompt	Response	Description
REQ	CHG	Change.
TYPE	CFN PARM	Configuration Record. System Parameters
...		
- MSCL	(0)-8191	Maximum number of Speed Call lists.

LD 18

Prompt	Response	Description
REQ	NEW	Add, or change.
TYPE	SCL	Speed Call data block.
LSNO	0-8190	Number of Pretranslation list.
DNSZ	4-(16)-31	Number of digits that can be in a list entry.
SIZE	10	Maximum number of entries.
WRT	(YES) NO	Data is correct and can be updated in data store.
STOR		x is the first digit dialed.
	x *	* = block call.
	x ***	*** = delete the digit.
	x space <CR>	space <CR> = pass digit unchanged.
	x yyyy...y	yyyy...y = replacement digits.

Copyright © 1994–2007, Nortel Networks
Nortel Networks Confidential

Prompt	Response	Description
WRT	(YES), NO	Data is correct and can be updated in data store.
STOR	<CR>	Ends input of list entries.

LD 18

Prompt	Response	Description
REQ	NEW CHG	Add, or change.
TYPE	PRE	Pretranslation
CUST	xx	Customer number, as defined in LD 15
XLAT	xxx yyyy	Pretranslation list, where: xxx = Pretranslation calling group number (0-254), and yyyy = corresponding Speed Call list number (1-8190).

LD 15

Prompt	Response	Description
REQ:	CHG	Change.
TYPE:	FTR	Features and options.
CUST		Customer number
	0-99	Range for Large System and CS 1000E system.
	0-31	Range for Small System and Media Gateway 1000B.
- PREO	0 1	Allow or deny Pretranslation, where: 0 = no Pretranslation, and 1 = Pretranslation.

When Pretranslation group 0 is configured, care must be taken to define the XLST prompt, rather than letting it default automatically to 0. If XLST does default to 0 when Pretranslation group 0 is configured, all sets in the switch are affected.

LD 10

Prompt	Response	Description
REQ:	NEW CHG	Add, or change.
TYPE:	500	Telephone type.
TN		Terminal number
	l s c u	Format for Large System and CS 1000E system, where l = loop, s = shelf, c = card, u = unit.

Copyright © 1994–2007, Nortel Networks
Nortel Networks Confidential

Prompt	Response	Description
	c u	Format for Small System and Media Gateway 1000B where c = card and u = unit.
XLST	0-254	Associate telephone with the specified Pretranslation group.
	<CR>	Default to Pretranslation group 0 (only when REQ = NEW). It is important to define the XLST prompt, rather than letting it default to 0, as when Pretranslation group 0 is configured, all sets in the switch are affected.

LD 11

Prompt	Response	Description
REQ:	NEW CHG	Add, or change.
TYPE:	a...a	Telephone type. Type **?** for a list of possible responses.
TN		Terminal number
	l s c u	Format for Large System and CS 1000E system, where l = loop, s = shelf, c = card, u = unit.
	c u	Format for Small System and Media Gateway 1000B where c = card and u = unit.
XLST	0-254	Associate telephone with the specified Pretranslation group.
	<CR>	Default to Pretranslation group 0 (only when REQ = NEW).

Feature operation

No specific operating procedures are required to use this feature.

Copyright © 1994–2007, Nortel Networks
Nortel Networks Confidential

Preventing Reciprocal Call Forward

Contents

This section contains information on the following topics:

"Feature description" (page 371)

"Operating parameters" (page 372)

"Feature interactions" (page 372)

"Feature packaging" (page 372)

"Feature implementation" (page 372)

"Feature operation" (page 372)

Feature description

This feature provides a modification to the Call Forward All Calls feature as a customer option. If set A attempts to enter a new Call Forward All Calls to set B, this modification verifies that set B has not been call forwarded to set A.

The verification process is repeated until one of the following conditions is met:

- the entered DN is not call-forwarded to any other set
- the activating set call forwards to the original Call Forward DN
- the maximum number of hunt steps is encountered a trunk is encountered, or
- a Pilot DN is encountered.

If a Multiple Appearance DN is encountered during the verification process, the only possible Call Forward Chain is checked.

Copyright © 1994–2007, Nortel Networks
Nortel Networks Confidential

Operating parameters

The verification is done only to current Call Forward states of the DNs being checked.

A set cannot Call Forward to itself.

This modification does not apply:

- to Hunt DNs
- to calls forwarded to the attendant
- across trunks

This feature applies to network environments.

Feature interactions

Network Call Redirection

For Network Call Redirection, when a call forwarding loop from one node to another occurs, the maximum number of redirections can be defined by the customer.

Remote Call Forward

This modification applies to Remote Call Forward.

Feature packaging

This feature is included in base system software.

Feature implementation

LD 15 - Allow or deny Preventing Reciprocal Call Forward for a customer.

Prompt	Response	Description
REQ:	NEW CHG	Add, or change.
TYPE:	FTR	Features and options.
...		
OPT	(PVCA) PVCD	Enter PVCD to (allow) deny Preventing Reciprocal Call Forward.

Feature operation

If set A attempts to enter a new Call Forward All Calls to set B, verification is given that set B has not been call forwarded to set A.

When this situation is encountered:

- If the attempt to enter the new Call Forward DN was made on set A using a SPRE or Flexible Feature Code (typically on a 500/2500-type

Copyright © 1994–2007, Nortel Networks
Nortel Networks Confidential

set), overflow tone is given to set A and the existing call-forward DN remains unchanged.

- If the attempt to enter the new Call Forward DN was made on set A using the Call Forward All Calls feature key, the attempted entry is treated like a normal invalid DN entry (that is, when the Call Forward All Calls key is pressed a second time after the DN has been entered, the associated lamp continues to flash until a valid forward DN is entered or the key is pressed for a third time).

Copyright © 1994–2007, Nortel Networks
Nortel Networks Confidential

Copyright © 1994–2007, Nortel Networks
Nortel Networks Confidential

Prime Directory Number

Contents

This section contains information on the following topics:

"Feature description" (page 375)

"Operating parameters" (page 375)

"Feature interactions" (page 375)

"Feature packaging" (page 376)

"Feature implementation" (page 376)

"Feature operation" (page 376)

Feature description

The bottom key on a Meridian 1 proprietary telephone is the Prime DN. It is preselected for call origination. If a user wishes to place or receive a call on any other DN, the key must be manually selected.

Operating parameters

Prime DN applies only to Meridian 1 proprietary telephones. Only one Prime DN is allowed per telephone.

Feature interactions

Automatic Wake Up FFC Delimiter

If you press the Prime Directory Number, when programming a Wake up request, you cancel the programming sequence. If an invalid timer is entered, the user hears an error tone. If another feature key is pressed during programming, it is ignored by the system.

Copyright © 1994–2007, Nortel Networks
Nortel Networks Confidential

Hot Line

If the Hot Line key is assigned to key 0 on a Meridian 1 proprietary telephone, it acts as the prime DN. When the user goes off-hook without selecting a DN key, the Hot Line is activated and the call is placed without further user action.

Feature packaging

This feature is included in base system software.

Feature implementation

Assign key 0 as the Prime DN in LD 10.

Feature operation

No specific operating procedures are required to use this feature.

Copyright © 1994–2007, Nortel Networks
Nortel Networks Confidential

Privacy

Contents

This section contains information on the following topics:

"Feature description" (page 377)

"Operating parameters" (page 377)

"Feature interactions" (page 377)

"Feature packaging" (page 378)

"Feature implementation" (page 378)

"Feature operation" (page 378)

Feature description

Meridian 1 proprietary telephones automatically provide Privacy for telephones sharing a single call arrangement Directory Number (DN). When a call is in progress on the DN, no other telephone on which the DN appears can enter the call.

Operating parameters

Privacy is not available for analog (500/2500-type) telephones.

If the Directory Number (DN) is shared with any single line telephone, Privacy is not in effect for any appearance of the DN, and anyone sharing that DN can enter an active call.

Feature interactions

Automatic Redial (ARDL)

If the ARDL call is redialed on a number that is shared with any single line telephone, the ARDL call is accepted when the single line telephone goes off-hook.

Copyright © 1994–2007, Nortel Networks
Nortel Networks Confidential

Bridging

Privacy is lost when telephones are bridged. Any appearance of the DN can enter the call by going off-hook.

Call Hold, Permanent

A call placed on Permanent Hold has Privacy removed. Privacy is reinstated when the call is removed from Permanent Hold.

Group Call

The maximum number of DNs that can be added as members of a Group Call is 20. Each Multiple Appearance, Multiple Call Arrangement with Ringing (MCR) or Multiple Call Arrangement without Ringing (MCN) DN reduces the number of telephone sets that can be added to a Group Call. For example, if two telephones have the same MCR appearance of a DN, the number of telephones in the Group Call becomes 19. That is, each appearance of a DN counts as one member, up to a maximum of 20, of the Group Call.

Multiple Appearance, Single Call Arrangement with Ringing (SCR) or Single Call Arrangement without Ringing (SCN) DNs count as one member of a Group Call, irrespective of its number of DN appearances.

Multiple Appearance Directory Number

If a Multiple Appearance, SCR/SCN DN is shared by Meridian 1 proprietary telephones only, Privacy is in effect. No one can enter a call unless the call is first placed on Hold, or unless Privacy Release is activated to allow another appearance to enter the call. If this configuration is shared between these telephones and single-line telephones, Privacy is not in effect for any appearance of the DN. Anyone sharing the DN can enter the call at any time.

Privacy Override

The user can Override the inherent privacy on Meridian 1 proprietary telephones. If an appearance occurs on a telephone with Privacy Override enabled, that appearance can bridge into an active call. This pertains to calls on a multiple appearance single call Directory Number (DN) when not mixed with single line telephones.

Feature packaging

This feature is included in base system software.

Feature implementation

There are no specific implementation procedures for this feature.

Feature operation

No specific operating procedures are required to use this feature.

Copyright © 1994–2007, Nortel Networks Nortel Networks Confidential

Privacy Override

Contents

This section contains information on the following topics:

"Feature description" (page 379)

"Operating parameters" (page 379)

"Feature interactions" (page 380)

"Feature packaging" (page 380)

"Feature implementation" (page 380)

"Feature operation" (page 381)

Feature description

A Meridian 1 proprietary telephone with a Privacy Override Allowed (POA) Class of Service can enter an established call on a multiple appearance single call Directory Number (DN). However, the call cannot be joined until it is established (that is, the EOD timer has expired).

If all members of a non-mixed multiple appearance single call DN group are allowed Privacy Override, the operation of the feature is equivalent to a mixed multiple appearance single call arrangement.

When a group contains a combination of Privacy Override Allowed (POA) and Privacy Override Denied (POD) Classes of Service, the telephones denied Privacy Override cannot bridge into established calls.

Operating parameters

Privacy Override does not apply to analog (500/2500-type) telephones.

The system must be equipped with a conference loop. The number of timeslots is limited to 30 per conference loop. For Small Systems a maximum of six parties per conference is supported.

Copyright © 1994–2007, Nortel Networks
Nortel Networks Confidential

Feature interactions

Automatic Redial (ARDL)

When the Privacy Override feature is activated on the MADN key and the one set activates ARDL, this call can be accepted by other sets.

Call Park, Call Transfer

Calls in a Privacy Override conference state cannot be parked or transferred.

Conference

The Conference feature can be used to add other parties to a Privacy Override connection.

Exclusive Hold

Telephones with POA Class of Service cannot bridge into calls on Directory Numbers (DNs) with Exclusive Hold active.

Multiple Appearance Directory Number - Mixed Mode

Since the Privacy feature is not active in this mode, telephones with a POD Class of Service can bridge into an active call.

Privacy

The user can Override the inherent privacy on Meridian 1 proprietary telephones. If an appearance occurs on a telephone with Privacy Override enabled, that appearance can bridge into an active call. This pertains to calls on a multiple appearance single call Directory Number (DN) when not mixed with single line telephones.

Feature packaging

This feature is included in base system software.

Feature implementation

LD 11 - Allow or deny Privacy Override on a Meridian 1 proprietary telephone.

Prompt	Response	Description
REQ:	CHG	Change.
TYPE:	a...a	Telephone type. Type **?** for a list of possible responses.
TN		Terminal number
	l s c u	Format for Large System and CS 1000E system, where l = loop, s = shelf, c = card, u = unit.
	c u	Format for Small System and Media Gateway 1000B where c = card and u = unit.
CLS	POA (POD)	Allow or deny Privacy Override.

Copyright © 1994–2007, Nortel Networks
Nortel Networks Confidential

Feature operation

To activate Privacy Override, press the multiple appearance single call DN. You are automatically connected to the call.

Copyright © 1994–2007, Nortel Networks
Nortel Networks Confidential

Copyright © 1994–2007, Nortel Networks
Nortel Networks Confidential

Privacy Release

Contents

This section contains information on the following topics:

"Feature description" (page 383)

"Operating parameters" (page 383)

"Feature interactions" (page 383)

"Feature packaging" (page 384)

"Feature implementation" (page 384)

"Feature operation" (page 385)

Feature description

In multiple appearance single call arrangements of Meridian 1 proprietary telephones, Privacy Release allows one other appearance of the Directory Number (DN) to enter the call. Privacy is then reestablished until Privacy Release is activated again.

Operating parameters

Privacy Release is available only with Meridian 1 proprietary telephones in multiple appearance single call arrangements.

The system must be equipped with a conference loop. The number of timeslots is limited to 30 per conference loop. For Small Systems a maximum of six parties per conference is supported.

Feature interactions

Automatic Redial

When an Automatic Redial (ARDL) call is not accepted by the calling party, the Privacy Release (PRS) key is ignored if pressed.

Copyright © 1994–2007, Nortel Networks
Nortel Networks Confidential

Call Park

When a call from a Meridian 1 proprietary telephone is parked, that telephone cannot activate Privacy Release. For example, Party A calls Party B. Party B parks the call. Party A cannot activate Privacy Release.

China - Attendant Monitor

If Privacy Release is activated on a set that is involved in a monitored call, Attendant Monitor is deactivated.

Dial Access to Group Calls, Group Call

The Privacy Release feature cannot be applied to Dial Access to Group Calls and Group Call.

Exclusive Hold

If the telephone with Privacy Release has Exclusive Hold Allowed in the Class of Service, and a call is on hold, another telephone with that Multiple Appearance Directory Number (MADN) cannot access the call.

Multiple Appearance Directory Number

Privacy Release has no effect on Multiple Appearance, Multiple Call Arrangement with Ringing (MCR), or Multiple Call Arrangement without Ringing (MCN) calls.

Music, Enhanced

When using Privacy Release to add one or more members to a call already receiving Music, the Music is removed.

Ring and Hold Lamp Status

If the Privacy Release feature is activated for multiple-appearance single-call DNs, the blinking rate is based on the Class of Service of each set on which other appearances of the DN occur.

Feature packaging

This feature is included in base system software.

Feature implementation

LD 11 - Allow/deny Privacy Release for Meridian 1 proprietary telephones.

Prompt	Response	Description
REQ:	CHG	Change.
TYPE:	a...a	Telephone type. Type **?** for a list of possible responses.
TN		Terminal number

Copyright © 1994–2007, Nortel Networks
Nortel Networks Confidential

Prompt	Response	Description
	l s c u	Format for Large System and CS 1000E system, where l = loop, s = shelf, c = card, u = unit.
	c u	Format for Small System and Media Gateway 1000B where c = card and u = unit.
KEY	xx PRS	Add a Privacy Release key. M2317 telephones automatically assign the PRS key to key 28.

Feature operation

To allow someone with another appearance of the Directory Number (DN) to enter a call:

Step	Action
1	Press **Priv Rls**. All appearances of that DN flash. One other party can enter the call by pressing the flashing DN key that has the call.
2	You must press **Priv Rls** again to allow another appearance of the DN to enter the call.

—End—

Copyright © 1994–2007, Nortel Networks
Nortel Networks Confidential

Copyright © 1994–2007, Nortel Networks
Nortel Networks Confidential

Private Line Service

Contents

This section contains information on the following topics:

"Feature description" (page 387)

"Operating parameters" (page 388)

"Feature interactions" (page 388)

"Feature packaging" (page 389)

"Feature implementation" (page 389)

"Feature operation" (page 391)

Feature description

Private Line Service enables the customer to assign private Central Office (CO) lines to selected telephones or power fail transfer equipment. When associated with a Meridian 1 proprietary telephone, the following features are available to Private Line Service:

- Automatic Dialing
- Automatic Preselection
- Call Pickup
- Call Transfer
- Call Status
- Conference
- Common Audible Signaling
- Hold
- Multiple appearance single call arrangement
- Prime Directory Number

Copyright © 1994–2007, Nortel Networks
Nortel Networks Confidential

- Privacy
- Privacy Release
- Release, and
- Analog (500/2500-type) telephone/Meridian 1 proprietary telephone mix.

Operating parameters

Single line telephones with Private Line Service cannot access system features.

A maximum of 126 Private Lines are available per customer.

A Private Line should not be assigned as a Prime Directory Number (DN) unless preselection is required.

Hunting does not apply to Private Line service.

Call Forward on Private Lines (Meridian 1 proprietary telephones) is not forwarded to a second appearance of its own DN.

Feature interactions

Call Modification Features (CMF) in the trunk data block can be inhibited as follows:

- Call Transfer
- Conference
- Call Forward, and
- Message Center.
- Call Forward No Answer
  Call Forward No Answer is always inhibited on Private Lines.
- Multiple appearance
  For multiple appearance calls, call modification cannot be blocked.

Automatic Line Selection

A Private line DN is selected by Incoming Ringing/Non-Ringing Line Selection and Outgoing Line Selection.

Automatic Redial

An Automatic Redial (ARDL) call can be activated on a Private Line Service key. The call can only be redialed when the calling party's PVR or PVN key is free.

Copyright © 1994–2007, Nortel Networks
Nortel Networks Confidential

Call Park

Private lines cannot park a call.

Calling Party Privacy

The Private Line Service feature will outpulse the Privacy Indicator only if it is dialed by the originator. An asterisk will be outpulsed to the far end only if it is an Outpulsing of Asterisk and Octothorpe (OPAO) call; otherwise the asterisk signals a three-second pause.

The asterisk (*) used to introduce a pause while outpulsing digits is supported on analog and DTI trunks, but not supported on ISDN trunks. On ISDN trunks, if the OPAO feature is enabled, the asterisk (*) is outpulsed as a called party digit.

China - Attendant Monitor

Attendant Monitor is blocked from monitoring a Private DN.

Collect Call Blocking

If an incoming DID or CO call from a private line trunk terminates on a set with a CCBA Class of Service, the Collect Call Blocking answer signal is provided in place of the regular answer signal.

Do Not Disturb

Do Not Disturb cannot be used on Private Lines.

Flexible Feature Code Boss Secretarial Filtering

Flexible Feature Code Boss Secretarial Filtering takes precedence over Private Line and Hot Line.

Hot Line

A Hot Line key cannot be a Private Line, as this would defeat the benefits of Private Line service.

Station-to-Station Calling

You must go over the public network to reach a Private Line. The software PRDN is not meant to be dialed directly.

Feature packaging

This feature is included in base system software.

Feature implementation

Task summary list

The following is a summary of the tasks in this section:

1. "LD 16" (page 390)

Copyright © 1994–2007, Nortel Networks
Nortel Networks Confidential

Add or change a Private Line trunk route.

2. "LD 14" (page 390)

   Add or change Private Line trunks in the Private Line trunk route.

3. "LD 10" (page 391)

   Add or change Private Line Service for analog (500/2500-type) telephones.

4. "LD 11" (page 391)

   Add or change Private Line Service for Meridian 1 proprietary telephones.

LD 16

Prompt	Response	Description
REQ	CHG	Change.
TYPE	RDB	Route Data Block.
CUST	xx	Customer number, as defined in LD 15
ROUT		Route number
	0-511	Range for Large System and CS 1000E system.
	0-127	Range for Small System and Media Gateway 1000B.
TKTP	COT	Central Office trunk.
PRIV	YES	Route is a Private Line route.
AUTO	(NO) YES	Trunks in this route autoterminate.
ICOG	IAO	Incoming and outgoing route.

LD 14

Prompt	Response	Description
REQ	NEW CHG	Add, or change.
TYPE	COT	Central Office trunk.
TN		Terminal number
	l s c u	Format for Large System and CS 1000E system, where l = loop, s = shelf, c = card, u = unit.
	c u	Format for Small System and Media Gateway 1000B where c = card and u = unit.
XTRK	XUT XEM	Universal Trunk Card (NT8D14), E&M Trunk Card (NT8D15). Prompted only for Superloops and the first unit on the card.

Copyright © 1994–2007, Nortel Networks
Nortel Networks Confidential

Prompt	Response	Description
PRDN	xxx...x	Private Line phantom DN.
CMF	(NO) YES	Call modification is or is not inhibited for private line.

LD 10

Prompt	Response	Description
REQ:	CHG	Change.
TYPE:	500	Telephone type.
TN		Terminal number
	l s c u	Format for Large System and CS 1000E system, where l = loop, s = shelf, c = card, u = unit.
	c u	Format for Small System and Media Gateway 1000B where c = card and u = unit.
DN	xxx...x	Private Line DN (xxx...x is the same as for PRDN prompt in LD 14).

LD 11

Prompt	Response	Description
REQ:	CHG	Change.
TYPE:	a...a	Telephone type. Type **?** for a list of possible responses.
TN		Terminal number
	l s c u	Format for Large System and CS 1000E system, where l = loop, s = shelf, c = card, u = unit.
	c u	Format for Small System and Media Gateway 1000B where c = card and u = unit.
KEY	xx PVN yyy...y	Private Line non-ringing key (yyy...y is the same as for PRDN prompt in LD 14).
	xx PVR yyy...y	Private Line ringing key (yyy...y is the same as for PRDN prompt in LD 14).

Feature operation

No specific operating procedures are required to use this feature.

Copyright © 1994–2007, Nortel Networks
Nortel Networks Confidential

Copyright © 1994–2007, Nortel Networks
Nortel Networks Confidential

Public Switched Data Service

Contents

This section contains information on the following topics:

"Feature description" (page 393)

"Operating parameters" (page 394)

"Feature interactions" (page 394)

"Feature packaging" (page 396)

"Feature implementation" (page 396)

"Feature operation" (page 396)

Feature description

The Public Switched Data Service (PSDS) allows you to receive data on your system at 64 kbps over an Integrated Services Digital Network (ISDN) Primary Rate Interface (PRI) channel. See Figure 10 "Public Switched Data Service (PSDS) between system and Central Office (CO)" (page 393).

Figure 10
Public Switched Data Service (PSDS) between system and Central Office (CO)

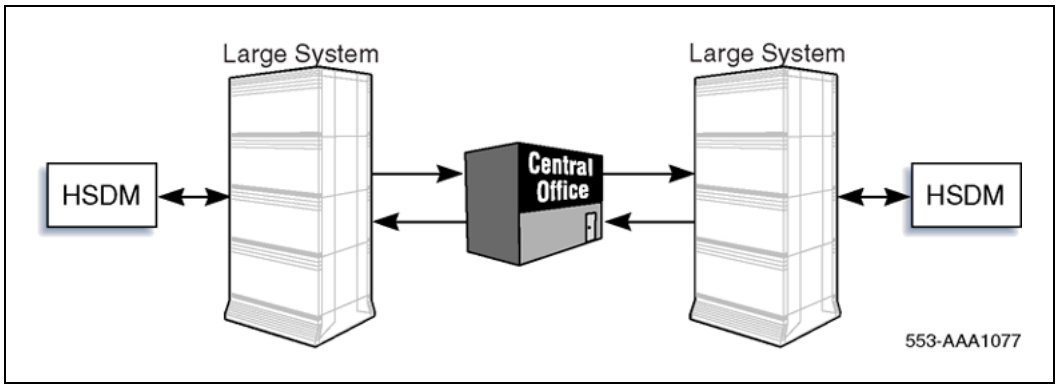

Copyright © 1994–2007, Nortel Networks
Nortel Networks Confidential

You can install a T1 link to different vendors and use the Meridian Communications Adapter (MCA) or QMT21 High Speed Data Module to initiate or receive a 56 kbps digital data call. The digital data call then transports across the vendor's digital network to another system or an SL-100.

Operating parameters

PSDS calls are supported in the following situations:

- a system and the Central Office (CO)
- a tandem call from an SL-100 to the system, and
- the system and other PSDS-compatible switches.

The PSDS supports Digital Trunk Interface (DTI) type trunks, TIE and DID/DOD trunks, and Electronic TIE Network (ETN) compatible signaling.

End-to-End DTI network

For all system networks (Point to Point), users can access the existing data facility in the system to support data calls, or they can select the Switched 56 data mode. For mixed-vendor private networks, users can only select the PSDS mode.

Feature interactions

ISDN PRI

The following routes are possible using this feature on Primary Rate Access:

- Point to Point access
  For Point to Point access of TIE trunks, the software can be modified to handle the requirements of this feature.
- Tandem call
  For tandem access, additional information on this feature is needed, or the data call can be defined as a voice call.
- DID/FEX/WATS/Accunet
  The system supports PSDS data calls to these trunk types.
- Public Network hop off
  Signaling is provided to inform the tandem switch about the PSDS data call.

Related features

When using PSDS, you may want to see the following features.

Copyright © 1994–2007, Nortel Networks Nortel Networks Confidential

Meridian Communications Adapter (MCA)

The Meridian Communications Adapter (MCA) allows asynchronous ASCII terminals, personal computers, and printers to be connected to the telephone using an RS-232C or V.35 interface. The MCA also allows synchronous applications (DTEs such as video conferencing equipment and Group IV fax units) to be connected to the telephone. See *Meridian Communications Unit and Meridian Communications Adapter: Description, Installation, Administration, Operation (553-2731-109)* for detailed information on the MCA.

Meridian Communications Unit (MCU)

The Meridian Communications Unit (MCU) provides a standalone version of the Meridian Communications Adapter (MCA).

The Meridian Communications Unit (MCU) allows you to transmit and receive data using either PSDS over the public network or a private network. The MCU, which replaces the QMT21C, is designed for domestic and international use, with transmission speeds up to 19.2 kbps asynchronous, and 64 kbps synchronous, integrated display, and self diagnostics. The MCU supports autodialing, ring again, and speed calling, as well as autobauding and automatic parity detection. You can use the MCU for:

- Video conferencing
- LAN bridging
- Bulk data/PC file transfer
- Dial back-up, and
- Host connectivity.

The MCU fully complies with RS-232C and can be configured as DCE or DTE to connect to a terminal, printer, or fax machine.

Unlike the MCA, the MCU provides a dedicated call key and call progress tones. The MCU also permits smart modem pooling.

The MCU supports the DM-DM, T-Link, V.25 bis, and PSDS interfaces as well as the RS-232C, CCITT V.35, CCITT V.24, and RS570/RS3449 (with different cables) interfaces. It complies with V.28 for European approval.

See *Meridian Communications Unit and Meridian Communications Adapter: Description, Installation, Administration, Operation (553-2731-109)* for detailed information on this feature.

Copyright © 1994–2007, Nortel Networks
Nortel Networks Confidential

Transparent Data Networking (TDN)

Transparent Data Networking provides a transparent data channel for data modules to perform end-to-end protocol exchange. This means that two data modules will wait for a circuit path to be established before exchanging protocol parameters.

The data modules and protocols that are supported by TDN are:

- Meridian Communications Adapter (MCA) card in a Meridian Modular telephone (MMT) set, which uses PSDS and T-Link protocols on external calls
- Meridian Communications Unit (MCU), a standalone version of the MCA, which uses T-Link and PSDS protocols on external calls
- Basic Rate Interface (BRI) telephones, which use T-Link, V.110, and V.120 protocols, and
- High Speed Data Module (HSDM) when configured to use PSDS.

See *Transparent Data Networking (553-2731-110)* for detailed information on TDN.

Feature packaging

This feature is included in base system software.

Feature implementation

The data selection (DSEL) in the Route Data Block can be defined as voice calls only (VCE), data calls only (DTA), or voice and data calls (VOD). The call can be defined as voice calls, regular data calls, or PSDS calls. See *Software Input Output Administration (NN43001-611)* to configure the Route Data Block.

Feature operation

Originating data calls

For direct access, dial the regular seven-digit or 10-digit number.

For special route access, dial a route access code after hearing a dial tone.

Receiving data calls

Calls are answered automatically.

An auto-answer call is answered by the data module, and no special operation is necessary.

Copyright © 1994–2007, Nortel Networks
Nortel Networks Confidential

Pulsed E and M DTI2 Signaling

Contents

This section contains information on the following topics:

"Feature description" (page 397)

"Operating parameters" (page 397)

"Feature interactions" (page 398)

"Feature packaging" (page 398)

"Feature implementation" (page 399)

"Feature operation" (page 403)

Feature description

This feature provides pulsed channel associated ABCD-bit line signaling on 2 Mbps digital trunks. This signaling is used by the French Colisée and Indonesian systems, and is equivalent to analog pulsed E&M signaling. Pulsed E&M 2 Mbps Digital Trunk Interface (DTI2) signaling can be configured by using LDs 16 and 73.

Operating parameters

This feature does not apply to Small Systems.

Firmware changes to the QPC915C (French Colisée Pulsed E&M DTI2 signaling pack) and the QPC536E DTI (Indonesian Pulsed E&M DTI2 signaling pack), to implement the timing requirements of successive signals for both French Colisée and Indonesia.

Copyright © 1994–2007, Nortel Networks
Nortel Networks Confidential

Feature interactions

China Number 1 signaling

Cancel Offering (Toll Operator Break Out) is added to the Toll Operator Break-in feature. Calling Party Control is enhanced to use the OHTT, as well as the OHT prompt in LD 16.

Digital Trunk Interface (DTI) - Commonwealth of Independent States (CIS)

Pulsed E&M is not supported by CIS DTI.

2 Mbps Digital Trunk Interface

Pulsed E&M DTI2 signaling is based on 2 Mbps DTI.

MFE for Socotel

Pulsed E&M DTI2 signaling is compatible with MFE for Socotel in the slave mode.

MFC/Semi-compelled MFC

Pulsed E&M DTI2 signaling is compatible with MFC and Semi-compelled MFC (SMFC).

New Toll Call Identification

Pulsed E&M DTI2 signaling is used to distinguish between national and international calls, in order to initiate clear back timing of the correct duration.

Periodic Pulse Metering

Pulsed E&M DTI2 signaling provides the following changes to PPM:

- the ANSWER and RE-ANSWER signals will be counted as a PPM pulse
- the counting of PPM pulses will not be activated when the call is set up; it will be activated when an ANSWER or RE-ANSWER signal is received, and
- PPM pulse detection will be turned off when a CLEAR BACK signal is received.

Lockout

Pulsed E&M DTI2 signaling will allow a flexible treatment to occur on outgoing trunks which are locked out. This will consist of allowing outgoing trunks which are locked out to send repeated FORWARD RELEASE signals.

Feature packaging

Pulsed E & M DTI2 Signaling requires the following packages:

- Pulsed E&M (PEDM) package 232
- International Supplementary Features (SUPP) package 131

Copyright © 1994–2007, Nortel Networks Nortel Networks Confidential

- 2 Mbps Digital Trunk Interface (DTI2) package 129
- Special Services for 2500 Sets (SS25) package 18
- 500 Set Dial Access to Features (SS5) package 73
- Operator Call Back (China #1) (OPCB) package 126
- Attendant Break-in/Trunk Offer (BKI) package 127
- PPM/Message Registration (MR) package 101
- Multifrequency Compelled Signaling (MFC) package 128

Feature implementation

Task summary list

The following is a summary of the tasks in this section:

1. "LD 16" (page 399)

   Configure the Route Data Block for Pulsed E and M DTI2 Signaling.

2. "LD 73" (page 401)

   Configure the DTI Data Block for Pulsed E and M DTI2 Signaling.

3. "LD 73" (page 402)

   Change the signal values for incoming/outgoing calls.

4. "LD 73" (page 402)

   Change the signal values for incoming calls.

5. "LD 73" (page 403)

   Change the signal values for outgoing calls.

LD 16

Prompt	Response	Description
...		
RPPM	...	
A1MR		First Meter Pulse. Prompted if DTRK = YES, DGTP = DTI2 and MR = PPM.

Copyright © 1994–2007, Nortel Networks
Nortel Networks Confidential

Prompt	Response	Description
	(NO) YES	Enter YES to cause the meter pulses received before an ANSWER signal to be invalid. The ANSWER signal is taken as the start of the first charging period (that is, when an ANSWER signal is received, the PPM count is incremented). NO is the default, and causes the meter pulses to be counted from the moment that the outgoing trunk is seized. When the trunk answers, the PPM count is left unchanged.
...		
IMCB	...	
TOBO		Toll Operator Break Out. Prompted if DTRK = YES, DGTP = DTI2 and MR = PPM.
	(NO) YES	If YES is entered, an OPCA signal received after a toll operator Break-in operation has been completed will result in the toll operator being removed off the call. If NO (the default) is entered, OPCA signals after a toll operator Break-in operation will be ignored.
...		
IHT	...	
OHT	0-(30)-62	Prompted if CNTL = YES and OPCB = YES. Enter the number of seconds, in increments of two, after which an outgoing CGPC non-toll call will disconnect, after the far end disconnects.
OHTT	0-(30)-62	Prompted if CNTL = YES and OPCB = YES. Enter the number of seconds, in increments of two, after which an outgoing CGPC toll call will disconnect, after the far end disconnects.
...		
FALT	...	
FRIN		Forward Release Indefinitely. Prompted only if DTRK = YES and DGTP = DTI2.

Copyright © 1994–2007, Nortel Networks
Nortel Networks Confidential

Prompt	Response	Description
	(NO) YES	If YES is entered, a FORWARD RELEASE signal is re-sent every time the Disconnect Supervision timer expires and every time it is restarted. If NO (the default) is entered, a FORWARD RELEASE signal is not resent.
FRRC		Forward Release Repetition Count. Prompted only if FRIN = YES.
	0-(4)-15	Enter the value for the number of times that FORWARD RELEASE signal is resent before an error message is printed, if an acknowledgment is expected but not received.
FRRS		Forward Release Repetition Seize. Prompted only if FRIN = YES.
	(NO) YES	Enter YES to reseize the trunk before resending the FORWARD RELEASE signal. Enter NO to not have the trunk reseized before the FORWARD RELEASE signal is resent.
FRRD	128-(384)-1920	Forward Release Repetition Delay, in milliseconds. This is the delay between sending the SEIZE signal and FORWARD RELEASE signal. It is only prompted if FRIN = YES and FRRS = YES.
RRBS		Repeat Release Before Seize. This prompt allows a FORWARD RELEASE signal to be sent immediately before a SEIZE signal on a DTI2 trunk. Prompted only if DTRK = YES, DGTP = DTI2, and FRRS is not set to YES.
	(NO) YES	Enter YES to have a FORWARD RELEASE signal resent followed by the SEIZE signal. Enter NO to seize the trunk normally.
RLSM	(0)-15	Release Mechanism Only prompted if DTRK = YES and DGTP = DTI2.

LD 73

Prompt	Response	Description
...		
PERS	...	

Copyright © 1994–2007, Nortel Networks
Nortel Networks Confidential

Prompt	Response	Description
DBNC	(10)-32	The De-bounce time for ABCD bit signals.
...		
TIME	...	
MINP	(8)-256	The Minimum Pulse Length for a Meter Pulse.
SASU	0-(1920)-32256	The Seize Acknowledge Supervision time, in milliseconds. The JDMI default = 4992 milliseconds.

LD 73

Prompt	Response	Description
...		
FALT	...	
TIME	(0)-1920	The persistence time required before signal is accepted. This value is used to implement the BLOCKING signal.

LD 73

Prompt	Response	Description
...		
E SEZ(R)	ABCD	SEIZE signal.
TIME	16-(56)-1000 16-(296)-1000	Duration of pulsed time on and off, in milliseconds. The default for on is 56, and for off is 296.
E SEZA(S)	ABCD N	SEIZE ACKNOWLEDGE (answer) signal.
TIME	0-(150)-800	Delay, in milliseconds, before sending SEIZE ACKNOWLEDGE.
P WNKS(S)	ABCD N	Wink Start.
TIME	10-(220)-630	Pulse length of WNKS signal, in milliseconds.
P OPCA(R)	ABCD N	OPERATOR CALLING (receive) signal.
TIME	16-(96)-1000 16-(160)-1000	Duration of pulsed time on and off, in milliseconds. The default for on is 96, and for off is 160.
E CONN(S)	ABCD	CONNECT (answer) signal.
TIME	10-(150)-630	Pulse length of CONN signal, in milliseconds.
C CLRB(S)	ABCD/N	CLEAR BACK (answer) signal.

Copyright © 1994–2007, Nortel Networks
Nortel Networks Confidential

Prompt	Response	Description
TIME	10-(600)-630	Pulse length of CLRB signal, in milliseconds.
P BRLS(S)	ABCD N	BACKWARD RELEASE (answer) signal.
TIME	10-(600)-2000	Pulse length of BACKWARD RELEASE signal, in milliseconds.
P FRLS(R)	ABCD N	FORWARD RELEASE (receive) signal.
TIME	16-(296)-2000 16-(960)-2000	Duration of pulsed time on and off, in milliseconds. The default for on is 296, and for off is 960.

LD 73

Prompt	Response	Description
...		
E SEZ(S)	ABCD	SEIZE signal.
TIME	10-(150)-630	Delay, in milliseconds, before sending SEIZE signal.
E SEZA(R)	ABCD N	SEIZE ACKNOWLEDGE (receive) signal.
P WNKS(R)	ABCD N	Wink Start (receive) signal.
TIME	16-(136)-504 16-(288)-504	Duration of pulsed time on and off, in milliseconds. The default for on is 136, and for off is 288.
E CONN(R)	ABCD	CONNECT (receive) signal.
TIME	16-(56)-1000 16-(296)-1000	Duration of pulsed time on and off, in milliseconds. The default for on is 56, and for off is 296.
C CLRB(R)	ABCD N	CLEAR BACK (receive) signal.
TIME	16-(296)-1000 16-(960)-1000	Duration of pulsed time on and off, in milliseconds. The default for on is 56, and for off is 296.
P FRLS(S)	ABCD N	FORWARD RELEASE (answer) signal.
TIME	10-(600)-2000	Duration of FORWARD RELEASE signal, in milliseconds.
P BRLS(R)	ABCD N	BACKWARD RELEASE (receive) signal.
TIME	16-(296)-2000 16-(960)-2000	Duration of pulsed time on and off, in milliseconds. The default for on is 296, and for off is 960.

Feature operation

No specific operating procedures are required to use this feature.

Copyright © 1994–2007, Nortel Networks
Nortel Networks Confidential

Copyright © 1994–2007, Nortel Networks
Nortel Networks Confidential

Radio Paging, X11

Contents

This section contains information on the following topics:

"Feature description" (page 405)

"Operating parameters" (page 416)

"Feature interactions" (page 417)

"Feature packaging" (page 426)

"Feature implementation" (page 426)

"Feature operation" (page 435)

Feature description

The Radio Paging (RPA) feature allows radio paging equipment (radio paging system) to be connected to asystem. The radio paging system is a communications system used to contact mobile parties equipped with portable receivers. This communication is done via radio signals. The communication channels can be single-type (allowing one party to be paged at a time), or multiple-type (allowing several parties to be paged simultaneously).

To make a paging call, the calling party dials the paging access Flexible Feature Code. The paged party receives an indication of the incoming call in the form of a special tone, a verbal message, or a display message. The paged party can then answer the incoming call from any telephone by dialing the answer paging Flexible Feature Code. The calling party remains off-hook until the call is answered. If all paging trunks are busy, the calling party receives a special congestion tone. The call can be tried again by redialing, or by activating the Ring Again feature.

Copyright © 1994–2007, Nortel Networks
Nortel Networks Confidential

When making a paging call, the system requires a paging access code, a mode digit, and dialed digit information. The paging access code is used by the paging system to identify the pager. The system derives this paging code by translating the DN of the party to be paged. This translation can be done in different ways, as described in this module. The mode digit indicates the type of display to be sent to the pager equipment (there are five possible display types). The digit information pertains to the calling party's DN. Depending on the type of paging chosen by the customer, this information is either entered manually by the calling party, or automatically by the system.

Local Radio Paging

To initiate a paging call, the Radio Paging System (RPS) requires the following activation sequence:

- Paging System Access (PSA) code
- mode digit
- information digits

The PSA code is the number used to identify a particular paging device. This code is derived by using the Directory Number (DN) of the party to be paged as a variable in the DN-PSA code translation procedure. If a valid DN is entered, the system sends the PSA code to the RPS that pages the party. If an invalid DN is entered, translation cannot be done and the caller receives Call To Vacant Number (CTVN) treatment. The caller can optionally page continuously until the following conditions are met:

- the paged party answers the page
- the caller goes on-hook
- the paging call times out

The paged party is required to answer the paging call within a specified time limit. When a paging call is not answered in time and the caller remains off-hook, a meet-me operation is possible. With this operation, calling parties to a radio pager are placed in a queue for a period of time, and the paged party can connect to the caller by dialing the answering Flexible Feature Code (FFC) and the paged party's DN. This connection appears as a simple call between two sets.

The paging time limits only apply to calls internal to the system. All external calls transferred to the RPA feature will be subject to the recall timer (not the normal attendant recall) if the call is not answered.

The paged party can answer a paging call from one of the following:

- A set connected to the system by dialing the answering FFC followed by their own DN in order to connect to the caller and free the paging trunk.

Copyright © 1994–2007, Nortel Networks
Nortel Networks Confidential

- A Public Switched Telephone Network (PSTN) telephone in order to contact the system attendant and request that the paging call be answered. The attendant dials the answering FFC followed by the DN to connect to the caller while the paged party is held on the attendant console's source-side. The two parties are then connected in the normal way.

When there are multiple paging calls to a pager, any attempt to page a party already engaged in a paging call will receive ringback (if configured) from the system or call progress tones from the RPS. The caller will continue to page until the paged party answers or the caller recalls.

Remote Radio Paging

Remote Radio Paging (RRPA) provides a network-wide meet-me paging capability from a centralized location. Radio Paging can be accessed by remote nodes through a Coordinated Dialing Plan. These remote nodes can define CDP steering codes that route calls to the Radio Paging node.

The Radio Paging (RPA) package is not required at remote nodes, unless post-selection Radio Paging is required.

These steering codes are the equivalent of Flexible Feature Codes for Radio Paging, and are referred to as *Remote Radio Paging (RRPA) FFCs*. The steering codes must not be deleted by digit manipulation, since the digits are interpreted as the Radio Paging FFC at the radio paging node.

Figure 11 "A typical Remote Radio paging configuration" (page 408) illustrates a possible Remote Radio Paging configuration:

Copyright © 1994–2007, Nortel Networks
Nortel Networks Confidential

Figure 11
A typical Remote Radio paging configuration

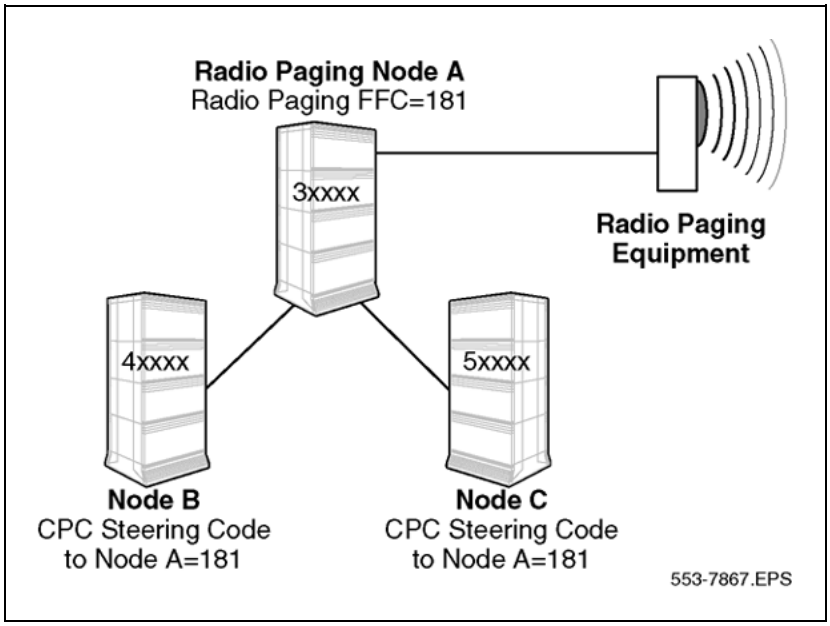

Node A, which is equipped with the Remote Radio Paging feature, is referred to as the Radio Paging node. The Radio Paging FFC is defined as 181. At remote nodes B and C, steering codes of 181 have been defined to route calls to node A. To access Radio Paging from nodes B and C, a caller simply has to dial 181.

Post Selection Access to Remote Radio Paging

Remote Radio Paging allows the *post selection* operation of Radio Paging from all nodes in the network. For this functionality, all nodes must be equipped with the Remote Radio Paging feature. For post-selection access, Trunk Steering Codes (TSCs) and Distant Steering Codes (DSCs) are defined as Remote Radio Paging (RRPA) FFCs.

If a post-selection access is made to a set on the same node, the originally-called set must be either ringing or busy. If the originally-dialed set is on another node, it must be on an established call. In this latter case, the established call is disconnected before being routed to the radio paging node.

Post-selection access can be performed from circuit switched network-type sets, Meridian 1000 series sets and Meridian proprietary sets, and attendant consoles.

Copyright © 1994–2007, Nortel Networks
Nortel Networks Confidential

Directory number to Paging System Access code translation

Each mobile paging device is identified by a unique Paging System Access (PSA) code. A single DN can only be translated to one PSA code. The following are the different types of translation methods available:

- no translation with DN sent as PSA code (single digits can be outpulsed immediately as dialed, or batched and sent all together)
- last two digits of DN sent as PSA code
- last three digits of DN sent as PSA code
- last four digits of DN sent as PSA code or
- a translation table is searched, and the stored PSA code for the DN is sent (several DNs can be associated with a single PSA code)

With the Group Hunting feature, it is possible to forward a call to a pilot DN which points to the table containing a list of DNs to be called. In this table the RPAC and DN for RPA can be stored.

Invalid directory number handling

With the first four methods, it is not possible for the system to detect if the DN is invalid. With the last method, an invalid DN is blocked with the caller receiving CTVN treatment. An individual with no telephone (or DN with which to associate) can use RPA through the use of a dummy DN. The method in which an RPS responds to an invalid PSA code varies by system.

Multiple Radio Paging systems

The RPA feature allows up to 16 (numbered 0 - 15) RPSs to be configured. The following are required to configure the RPA data block:

- The translation table is to be used for all systems.
- The DN is entered with respect to a particular system number.

Paging indications

The Radio Paging Access Code (RPAC), which is a defined FFC, allows access to the procedures required to initiate a paging call. After the access FFC is dialed, the caller receives the paging tone which is removed after the first digit of the DN is entered. Seizing the trunk to the RPS before or after dialing the DN, depends on the number of RPSs configured for the customer. After the initiating FFC and DN are entered, ringback can be provided or the RPS tones can be received.

If a trunk to the RPS is not available, the caller will receive the configured congestion busy tone. The call will have to be repeated when a trunk becomes available or the Ring Again feature is used (not for an inoperative RPS). The system will seize an idle paging trunk and send a PSA code to the RPS.

Copyright © 1994–2007, Nortel Networks
Nortel Networks Confidential

The following are cases where a tone from the system will be returned to the caller to indicate that paging is in progress:

- If ringback is not required, no tone is provided (some RPSs provide call progress tones to the caller).
- If ringback and detection-of-call-accepted signal are selected, then the caller gets the ringback tone (only after receiving a call accepted signal from the RPS).
- If ringback is required and detection-of-call-accepted signal is not required, then the caller gets the ringback tone after the valid entry of the FFC and DN.

When the caller is call forwarded (by CFNA or CFWAC) to a radio pager, a Recorded Announcement (RAN) can be sent to the caller.

Dialing plans

Two types of dialing plans can be used in anetwork:

- **Coordinated**. A single dialing plan is created to cover all the systems.
- **Independent**. Each switch has its own dialing plan, and the systems are connected by the use of RPACs.

The dialing plans can be arranged in various ways which can affect the way RPA works and how RPACs are manipulated.

With regard to dialing plans, the RPAC must be numeric to allow access from a secondsystem. Also, the Calling Line Identification (CLID) is displayed if RPA is equipped, otherwise the route access code and member number are displayed.

Single paging system

This arrangement has two or more systems connected, but only one system (the source) has a RPS connected. Telephones connected to any connected system can page any party using the same RPAC. The paged party can answer a paging call from any telephone on the source system. A telephone on a non-source system can connect to a telephone on the source system by dialing the DN. If the call is redirected (for example, by ATT, CFW, or CFNA) the set on the non-source system can access the RPS.

Multiple paging systems

This arrangement has two or moresystems connected, with each having a connected RPS. Different RPACs are required for each RPS (the user must be aware of which system is connected to which RPS). Trunk access between systems is handled by internal manipulation of the RPACs. When possible, RPSs should be connected to the same system.

Copyright © 1994–2007, Nortel Networks
Nortel Networks Confidential

Radio Paging system signals

The RPS has two categories of signals:

State of paging call

The following are the signals an RPS can send to thesystem in order to indicate the state of the paging call:

- A disconnect signal indicates that the paging trunk can be dropped.
- A call progress signal followed by a disconnect signal indicates a paging call is in progress.
- An all-digits-received signal indicates that all required digits are received.
- An absence signal, which is the receiving of a disconnect signal before a call progress signal, indicates that a pager is installed in the paging rack. (Calls to the pager in the rack receive the congestion tone from the system.).
- A paging-call-accepted signal indicates that the call is accepted.

Fault-clearing and maintenance

The system can interpret the ready-for-service signal from an RPS. The following system procedures occur when a fault on the paging hardware is detected:

Step	Action
1	All paging calls are dropped.
2	All trunks on the faulty system are made maintenance busy.
3	Subsequent paging calls on the faulty RPS will receive maintenance-busy treatment.

—End—

The following system procedures occur when the fault is corrected:

Step	Action
1	Idle all trunks on an RPS.
2	Each RPS is checked (faulty systems are made maintenance busy) after a system initializes and/or reloads.

—End—

Copyright © 1994–2007, Nortel Networks
Nortel Networks Confidential

Paging time limits

For sets internal to system network

Each RPAC has time limits defining how long a paged party has to answer a call. (The time limits only apply to sets internal to the system network, as external calls are subject to attendant (ATT) recall.) The following are the three paging timers:

- **Speechpath**. For the duration, the path is maintained.
- **Non-speechpath**. For the duration, a paging trunk is held to send digit information to the RPS.
- **Meet-me**. For the period of time to perform a meet-me operation, started after outpulsing is finished (interdigit timing is used for timing the DN entry).

The paging timers can be configured in the following two ways:

1. A warning tone is given eight seconds before a speechpath is dropped. After the speechpath timer expires, the trunk is dropped and the paged party is put under the meet-me timer. The caller is kept in a meet-me queue for this time.
2. The paging trunk is dropped if a paging-call-accepted signal is sent by the RPS. If a paging-call-accepted signal is not sent, after the non-speechpath timer expires the paging trunk is dropped. A meet-me timer then comes into effect.

   If a paging call is not answered before the meet-me timer is activated, the paging trunk is dropped (available for other calls) and the paging device stops paging.

   If a paging call is not answered after the meet-me timer has expired, the paging set is subjected to line lock-out procedures and ringback (if configured) to the caller is stopped.

For sets external to system network

The recall timer overrides the existing Attendant Recall on all external calls transferred to the paging trunks. The recall timer is required because a paged party is expected to take a longer time to answer a call. Any recall to the attendant is presented to the attendant as a recall Incoming Call Indicator (ICI). Forwarded calls to the RPS will recall to the attendant. External calls are transferred to the paging equipment by the following:

- **Attendant**. Defined in the RTSA feature.
- **Set**. For calls transferred by circuit switched network sets.

Copyright © 1994–2007, Nortel Networks
Nortel Networks Confidential

Methods of operation

Two different operational methods, automatic and manual, are available for RPA. Various RPACs are provided for in each method. Each RPAC has different options associated with it.

Automatic

The system sends all necessary digit information automatically for the caller. The digit information cannot be modified.

Step	Action
1	The following are the procedures for an RPA call: Enter the RPAC.
2	Enter the DN of the paged party. The system then transmits the following digit information to the RPS: a. PSA code of the receiving device, b. mode digit, and c. the DN of the caller, if required (DN key used to page call).

—End—

Manual

The caller is required to enter the mode of operation that is desired. The caller sends any required digit information from the set.

The following are the procedures for an RPA call:

Step	Action
1	Enter the RPAC.
2	Enter the DN of the paged party (optionally translated to a PSA code).
3	Enter the mode digit.
4	Enter the necessary digit information.
5	Enter # to indicate the end-of-digit information. The system then transmits the following digit information to the RPS: a. PSA code of the receiving device b. mode digit, and c. all entered digit information.

Copyright © 1994–2007, Nortel Networks
Nortel Networks Confidential

—End—

Parallel paging

Parallel paging is a type of operation that applies to some TIE trunk interfaces (primarily used in Switzerland).

Parallel paging has the following characteristics:

- The caller remains off-hook until the paged party answers or until the call is terminated.
- The caller does not get any call progress tones from the RPS, only ringback from the system.
- The paged party's receiving device only has the capability of indicating that there is a call.
- Only the display bleep mode of operation is allowed.
- The caller receives no indication that a PSA code is invalid. The system supplies ringback tone until the call times out.

Initiating a paging call

Each of the following two procedures for initiating a paging call use the same RPAC, but require that the DN be dialed at different times.

Preselection

Radio Paging is accessed immediately by entering the RPAC and the DN. The caller knows the RPA feature is required before going off-hook.

Post-selection

The caller dials the DN before knowing that RPA is required. While receiving ringback or busy tone, the caller dials an RPAC (an FFC) to make the destination set stop ringing (the DN of the paged party does not have to be entered a second time).

When the caller puts a call on hold (For example, by Call Transfer or Conference key) and dials another set, post-selecting on Call Transfer or Conference is not allowed.

The automatic and manual methods of operation allow post-selection access to RPA. Single-digit post-selection access codes are not supported at Remote Radio Paging (RRPA) nodes.

The following are ways to perform post-selection access to RPA:

Copyright © 1994–2007, Nortel Networks
Nortel Networks Confidential

From a circuit switched network set The caller sends a recall signal and receives a special dial tone, then dials the required RPAC or has single-digit access using the 16-digit post-selection feature. The caller receives Call to Vacant Number (CTVN) treatment if the RPAC is invalid.

From a Meridian 1 proprietary set The caller presses the RPAG key (that has an RPAC associated with it) or 0 - 9 using single-digit post-selection to access RPA. The caller receives CTVN treatment if the RPAC is invalid.

From an attendant console The caller presses the RPAG key (configured with an RPAC) to contact the paged party. The attendant receives no special dial tone, and the PAG key lamp is not used. When the RPAG key is pressed, the flashing SRC or DEST lamp becomes lit if the post-selection was successful, otherwise it remains flashing.

Modes of operation

A variety of modes, defined in mode digits, are available to allow the caller to send different types of digit information to the pager before completing the paging procedure. Some mode digits require additional information from the caller. The mode digits conform to the European Selective Paging Manufacturers Association (ESPA) standards. The caller can optionally receive call progress tones from the RPS while off-hook.

When the attendant extends a call to a pager that is in the rack, an absence signal is returned and the call is relinked into the attendant queue. When a telephone extends a call to a pager that is in the rack, the call is recalled to the set.

The following are the five mode digits:

Mode 1: External meet-me display

With Mode 1, the paged party receives a bleep and/or EXT is displayed (for external caller) on the pager. The external number or trunk route and member number are not sent by the system. The paged party accesses a telephone and enters the answering RPAC (an FFC) followed by their DN. The system connects the two parties.

Mode 2: Internal meet-me display

With Mode 2, the paged party receives a bleep and/or the caller's DN (1 to 7 digits) is displayed in the form MMdn on the pager. The paged party accesses a telephone and enters the answering RPAC (an FFC) followed by their DN. The system connects the two parties. Network (ISDN) calls are considered internal and display the set's Calling Line Identification (CLID).

Copyright © 1994–2007, Nortel Networks
Nortel Networks Confidential

Mode 3: Display bleep

With Mode 3, the paged party receives a bleep and/or the caller's DN (1 to 7 digits) is displayed in the form Cdn on the pager. The paged party makes a simple call to the caller.

Mode 4: Two-way speechpath

With mode 4, the paged party receives a bleep and the caller's DN (1 to 7 digits) is displayed on the pager. A two-way speechpath (between the caller and pager) is created for a specified period of time.

Mode 5: Alarm display

With Mode 5, the paged party receives a bleep frequency and/or unique text is displayed (explaining the urgency of the call) and/or the caller's DN. The paged party makes a call to the caller.

This mode is for emergency use only.

Terminating a paging call

The Radio Paging trunk can be released in the following four ways:

- The paged party answers the paging call by dialing the answering RPAC followed by their DN.
- The caller goes on-hook.
- The paging call times out.
- A disconnect signal is sent from the RPS.

Operating parameters

A maximum of 16 RPSs are allowed per customer.

The number of channels to the RPS is limited to the number of trunk members allowed for a trunk route.

A PSA code must be a minimum of one digit to a maximum of seven digits in length.

Single-digit post-selection access codes are not supported at Remote Radio Paging (RRPA) nodes.

Post-selection access at RRPA nodes is not supported on the ABCD keys of ABCD sets.

All DNs in the network must have the same fixed length.

The RPA feature is offered to each system disk as a package only.

The translation table size is restricted by the amount of memory available.

The serial type of paging is not supported.

The RPA feature is not available within a Dial Intercom Group (DIG).

Copyright © 1994–2007, Nortel Networks
Nortel Networks Confidential

The Multi-party Operations (MPO) Three-party Service does not work while RPA is in progress.

Call transferring an RPA call to another party is not supported.

Adding an RPA call to a conference is not supported.

Since ISDN BRI telephones do not support FFCs, they cannot be used to access or answer RPA calls if the BRI telephones are local on the paging node. For network situations, BRI telephones can access and answer remote RPA calls. This is possible because the RPAX/RPAN FFCs are dialed as DSC/TSC steering codes.

For network RPA recall, the originating, tandem and paging nodes must be system switches.

For the Pre-selection to Paging situation, if the paged DN following the RPAX FFC is not local to the paging node, the CPND name for this DN cannot be obtained to display on the calling party. If the paged DN is local on the paging node and has CPND defined, the CPND can be retrieved and sent to the calling party for display purposes. For Post-selection to Paging, the CPND of the paged DN will be displayed even if the DN is not local to the paging node.

There is an existing option that allows the replacement of the RPAX FFC with a character string on set's displays. This is controlled by the DCHR prompt in LD 58. This only applies to the local paging node. On the remote node, the RPAX FFC is treated as DSC/TSC and therefore will be displayed as it is. This is an existing limitation of network Radio Paging and remains unchanged.

If a network call comes in to a set on the paging node and is redirected to paging by CFNA, the calling name cannot be retrieved and updated on the answering set when the paging call is answered. This happens only if the set on the paging node has CPND defined. If the set does not have CPND defined, the calling name could be updated on the answering party. This is a design limitation.

The following hardware is required for RPA operation:

- Televerket (TVT) Tateco system T-800 or T-900
- Hasler system DS-1000 or DS-2000
- trunk cards for parallel paging QPCxxx (TIE)

Feature interactions

Access restrictions

The RPA feature uses a TIE or Central Office (CO)/Public Exchange route to connect the system with the RPS equipment. This has some impact on current restrictions when the route is used for this purpose.

Copyright © 1994–2007, Nortel Networks
Nortel Networks Confidential

Class of Service restrictions

All restrictions that currently apply to TIE or CO routes do not apply if the route is used for Radio Paging. Any restricted set is capable of initiating an RPA call, while any set can be used to answer a paging call. The restricted set is capable of answering a paging call, even if it is from the exchange network.

Trunk Group Access Restrictions codes

The TIE or CO routes that are used for the RPA feature are subject to the limitations applied by Trunk Group Access Restrictions (TGAR) codes. Sets can be prevented from using RPA, but only after the RPAC entry. The restriction applies when accessing RPA and not when answering a call.

Trunk Barring

The normal trunk-to-trunk restrictions apply to the TIE or CO routes that are used for Radio Paging.

Attendant Recall

An RPA caller using a circuit switched network set cannot recall the attendant by flashing, as it is ignored.

The Radio Paging (RPA) recalls to the local attendant on the node where the RPA system is directly connected. This product improvement enables RPA to recall the attendant who originated the Radio Paging call only; the attendant may be located anywhere within a Meridian Customer Defined Network (MCDN).

The improvement also allows the attendant's display to be updated with paged name and to display paged name instead of answering name on the paged party when answered. In addition, the improvement enables network Radio Paging to show the same display information as in standalone operation.

Automatic Call Distribution

An Automatic Call Distribution (ACD) agent is allowed to transfer a call to RPA. The following are the operations:

- When a recall takes place and the transferring party is an ACD agent, the call is recalled to the ACD queue.
- When an RPA call is answered before the recall is presented to an ACD agent, the recall is removed from the queue.
- When an RPA call is answered while recall is presented to an ACD agent, the ringing is removed and the ACD agent is idled for other calls.
- When an RPA call is dropped while recall is presented to an ACD agent, it appears to the ACD agent as if the call was answered.

Copyright © 1994–2007, Nortel Networks
Nortel Networks Confidential

- When an ACD agent with an RPA recall presented presses a DN or a Make Set Busy key, the recall is removed from that ACD agent and a new recall to the ACD agent is attempted. If no ACD agents exists, the call is recalled to the attendant.

It is not possible to answer an RPA call that has recalled to an ACD agent with the Call Force option.

Automatic Dialing

The Autodial key can be programmed to perform RPA.

Automatic Timed Reminders

A new RPA recall timer (longer duration) overrides the existing recall timer. This RPA recall timer applies only to Public Switched Telephone Network (PSTN) and direct inward dialing (DID) sets using RPA trunks. The call receives Recall To Same Attendant (RTSA) treatment if the paging call is not answered by the paged party within the specified time.

Barge-in

Barge-in to either a caller trunk or an RPA trunk, while RPA is in operation, is not permitted and results in an overflow tone being returned to the attendant. The RPA operation is not affected and the paging will continue until one of the following occurs:

- the caller goes on-hook;
- the call is answered; or
- the call times out.

If an attendant attempts to Barge-in to an RPA trunk that is not busy, the trunk is seized and a dial tone is returned to the attendant. The attendant can then dial a PSA code to page the desired party. The method of operation is the same as Barge-in to an idle trunk.

Basic Automatic Route Selection

Radio Paging CO and TIE trunk routes can be set up with BARS.

These routes should not be entered in a schedule with normal CO or TIE routes, because they will respond differently.

Break-in

Break-in to either a caller or paged party, while RPA is in operation, is not permitted and results in an overflow tone being returned to the attendant. The RPA operation is not affected, and paging continues until one of the following occurs:

- the caller goes on-hook;

Copyright © 1994–2007, Nortel Networks
Nortel Networks Confidential

- the call is answered; or
- the call times out.

Busy Verify

Busy Verify for either a caller or paged party, while RPA is in operation, is not permitted and results in an overflow tone being returned to the attendant. The RPA operation is not affected and the paging will continue until one of the following occurs:

- the caller goes on-hook;
- the call is answered; or
- the call times out.

Call Detail Recording

Call Detail Recording (CDR) has two types of operation:

CDR on incoming or outgoing calls to Radio Paging system

In the first type, no CDR S record (between trunk and transferred party) is printed until the call is answered. Upon disconnection of an answered paging call, a CDR E record (between trunk and paged party) is printed, identifying the paged party DN and not the DN of the set from which the call was answered. Call Detail Recording (CDR) for internal calls is consistent with CDR for external calls.

No CDR record is printed on paging recalls which are re-extended to the paging trunk.

CDR on paging route

An "S" record is printed when an attendant extends an outgoing trunk call to a destination party. When the extended outgoing trunk call or the destination party releases to disconnect, an "E" record is printed.

Call Forward, Call Forward All Calls

This feature can allow equipped circuit switched network sets to have calls automatically forwarded to an RPAC. This forwarded number can be numeric or a non-numeric version in the FFC table.

Forwarding internal and external calls to the RPS requires the call forwarding number be defined as the RPAC and DN of paging device. If just the RPAC is entered, the paging DN is that of the set where CFW is activated. The RPS can provide a RAN for the caller.

Copyright © 1994–2007, Nortel Networks
Nortel Networks Confidential

Call Forward No Answer

A call to a circuit switched network or Meridian 1 proprietary set that is not answered after a specific number of rings is automatically forwarded to an RPS.

Call Transfer

A call can be transferred to an RPS with the following conditions: internal calls are subject to paging time outs; and external calls are subject to recall.

When transferring a call to an RPS, the transferring party may use pre-selection or post-selection method of access.

Call transferring an RPA call to another party is not supported.

Central Office/Public Exchange trunks

Central Office/Public Exchange trunks can be used for transfer of information to an RPS when the call progress tones from the RPS are received.

Conference

While in a conference, a party can make a paging call by using one of the following: switchhook flash (from a Meridian 1 proprietary set), Transfer (TRN) key, or Conference (A06) key (from a BCS set).

When the RPA call is complete, the party can drop Radio Paging and return to the conference. Adding an RPA call to a conference is not supported.

Dial 1

Using the register recall on a circuit switched network set, while receiving ringback tone, is allowed. If register recall is not allowed for a user, a ground button is used to allow post-selection initiation.

Digit Display

Meridian 1 proprietary sets

During RPA operation, the display shows the FFC and DN for pre-selection and the DN FFC for post-selection initiation. When a call is re-routed (forwarded, hunted or transferred) to the RPS, the caller's display shows the FFC and paged party DN. After a paging call is answered, the caller's display is updated to show the answering set's DN. The paged party's set displays the caller's DN.

Attendant consoles

The display is similar to the Meridian 1 proprietary set when accessing and answering RPA calls. When a recall from paging occurs, the attendant console display shows the RPA FFC and the paged party's DN. The recall ICI key also indicates that the paging call has recalled.

Copyright © 1994–2007, Nortel Networks
Nortel Networks Confidential

The CLID is displayed if that feature is equipped. With CPND, the paged party's name supplements their DN display. If the Display Characters (DCHR) option is used in the RPA (LD 58), the FFC DN is replaced by the specified characters.

Direct Inward Dialing

When an incoming DID trunk attempts to gain access to a TIE or CO trunk that is configured as having RPS equipment, these calls are not intercepted by the attendant. The RPA call is made in the normal manner. The RPAC must be numeric.

Direct Inward System Access

Public Switched Telephone Network (PSTN) calls, accessing the RPA trunk, are handled in the same fashion as direct inward dialing calls.

Do Not Disturb

A set (DN) in the Do Not Disturb (DND) state can receive paging calls.

Enhanced Flexible Hotline

The RPAC (FFC) and DN can be stored in a hotline list of pre-set digits.

Group Hunting

With Group Hunting, it is possible to forward a call to a pilot DN that points to a table containing a list of DNs to be called. In this Group Hunting table, the RPAC (FFC) and DN for RPA can be stored.

Hold

The Hold key or autohold works on a paging call as if a station-to-station call is being made. The caller's set can be on hold while receiving a ringback tone or call progress tones. When a paging call is put on hold, no indication is given if the call has been answered. The attendant console SRC lamp is continuously lit, from the winking state, when the call that is put on hold is answered.

Last Number Redial

When a valid RPA FFC with a DN is entered and the configured length is enough, the FFC and DN are stored. When a manual RPA FFC is entered, the information digits and octothorpe (#) character are also stored.

Multifrequency Compelled Signaling (MFC)

Radio Paging can be accessed by a diversion from TIE or DID trunks using MFC.

Copyright © 1994–2007, Nortel Networks
Nortel Networks Confidential

The idle signal is not sent immediately when the RPA trunk is seized, since the RPS answers with a call accepted signal or a busy signal (when the ACPS prompt is set to YES). An idle signal is sent back immediately when one of the following occurs:

- no signal can be sent back from the RPS (when the ACPS prompt is set to NO);
- a Recorded Announcement (RAN) is provided; or
- Recall on Busy is configured.

Multiple Appearance Directory Number

With a Multiple Appearance DN, only one receiving device PSA code can be associated with the DN (not associated with a particular set).

Multiple Customer Operation

Each customer can connect to the RPS equipment. The RPSs connected are independent of each other.

Multi-party Operations (MPO)

It is possible to hold an existing call (during Call Join, Three-party Service or Conference-6) and initiate or answer a paging call. Transferring an external call is subject to the RPA Recall timer. When there is no answer to an initiated paging call, the call is released in the normal manner by pressing the DN key again on a Meridian 1 proprietary set or pressing Register Recall on a circuit switched network set. The MPO user can toggle between an established call and a paging call.

Three-party Service does not work while RPA is in progress. If the caller flashes with an established held call and an active unanswered paging call, the paging call is stopped and the held call is reestablished as active.

Network Automatic Route Selection (NARS)

Radio Paging CO and TIE trunk routes can be set up with NARS.

These routes should not be entered in a schedule with normal CO or TIE routes because they will respond differently

Night Service

Incoming calls to a Night Service set (DN) can be transferred to RPA DNs. Calls can be entered or answered from the Night Service set. External calls transferred to RPA DNs recall to the Night Service DN.

Override

This feature allows a set to break into an existing call. The Break-in feature restrictions apply.

Copyright © 1994–2007, Nortel Networks
Nortel Networks Confidential

Ring Again

The RPA feature allows Ring Again to be applied when a paging route is busy. The caller can re-apply Ring Again when the congestion tone is received.

With RPA post-selection access and a caller attempting Ring Again, the indications that Ring Again is already activated or the queue is too large cannot be given until the RPAC has been dialed.

With RPA pre-selection access to a single RPS, the busy trunk indication is given immediately after the RPAC (FFC) is dialed. Ring Again only redials the trunk (on Meridian 1 proprietary sets all digits entered after the busy tone are redialed). The DN to be paged has to be re-entered.

With RPA pre-selection access to multiple RPSs and RPA post-selection access to a single RPS or multiple RPSs, the busy trunk indication is given after the DN is entered. Ring Again redials the trunk and the DN (all digit information in the automatic method is also redialed). Ring Again is ignored when a set is forwarded to the RPS, and all the trunks are busy.

Slow Answer Recall

A paging call is recalled to the attendant if it has gone unanswered after a period of time. The attendant uses the RLS key to extend the call again. The attendant console displays the RPAC (FFC), DN and CLID when there is a recall from paging.

Slow Answer Recall Modification (SLAM)

With the Slow Answer Recall Modification feature enabled, when the attendant answers a recall, the destination party is disconnected.

When the attendant answers a paging recall, the call is removed from the meet-me queue and the recall cannot be answered by the paging party by using RPA Answer. The paging party is put on the source side of the attendant; there is nothing connected on the destination side. The attendant cannot extend the call to paging by pressing the Release key. Pressing the Release key will disconnect the paging party from the source side and the attendant will become idle.

The attendant can extend the call to Radio Paging again by either: dialing the RPAX FFC + the DN (preselection); or dialing the DN, and while the DN is ringing or busy pressing the RPAG key (post-selection).

Speed Call

The Speed Call feature can be set up to perform RPA dialing.

Copyright © 1994–2007, Nortel Networks
Nortel Networks Confidential

Station-to-station calling

When a party is paged by one caller and a second party dials the paged party's DN, the call will ring the paged party's set in the normal manner.

Switchhook Flash

Using the register recall on a circuit switched network set is allowed while receiving a Ringback tone. If register recall is not allowed for a user, a ground (earth) button is used to allow the post-selection access method.

Tenant Service

A tenant can be restricted from accessing an RPA trunk and can be configured to share or privately use an RPA trunk. All other restrictions apply to RPA.

TIE trunks

This trunk type is used for information transfer to an RPS. Special hardware is required.

Traffic Measurements

The following traffic measurements are available for RPA:

- **Paging recall count**. Incremented each time a paging call is recalled to the attendant.
- **Average answer time**. The average time paging calls are in the paging queue before being answered.

Trunk Group Busy Indication

The attendant console's Trunk Group Busy (TGB) key/lamp pair can be assigned to each of the RPA trunk routes. The attendant presses the TGB key to deny a set access to a RPS. The TGB lamp goes on and all calls to the RPS are routed automatically to the attendant. Normal RPS access returns and the lamp goes off when the attendant presses the TGB key again. The following conditions apply to sets with TGAR:

- Sets with TGAR of 0 to 7 are routed to the attendant if the trunk group being accessed has been made busy by the attendant.
- Sets with TGAR of 8 to 15 are not restricted by the TGB operation by the attendant.

The TGB lamp flashes when all trunks in the paging trunk group are busy.

When a RPS is faulty, its TGB lamp flashes after all associated (with the faulty paging route) trunks have been made maintenance-busy. The reverse happens when the fault is corrected in the RPS hardware.

Copyright © 1994–2007, Nortel Networks
Nortel Networks Confidential

Feature packaging

The following feature packages are required for paging operation in addition to the Radio Paging (RPA) package 187:

- Flexible Feature Codes (FFC) package 139 (to gain access to RPA);
- 16-Button Dual-tone Multifrequency Telephone (ABCD) package 144 (to allow single digit post-selection access to RPA);
- For the Radio Paging network recall operation, Network Attendant Service (NAS) package 159 must be provisioned;
- For Remote Radio Paging, Coordinated Dialing Plan (CDP) package 59 is required to define RPA FFCs as Distant Steering Codes (DSCs) or Trunk Steering Codes (TSCs);
- To display characters instead of the Radio Paging Flexible Feature Code, Calling Party Name Display (CPND) package 95 is required; and
- Integrated Services Digital Network (ISDN) package 145 and its dependencies are required for operation in a Meridian Customer Defined (MCDN) ISDN network.

Feature implementation

Adding a Radio Paging System

Task summary list

The following is a summary of the tasks in this section:

1. "LD 15" (page 427)

   Enable or disable the RPA feature.

2. "LD 16" (page 427)

   Configure trunk route for Radio Paging feature.

3. "LD 14" (page 428)

   Enable or disable the reversing of the E-lead.

4. "LD 11" (page 428)

   Configure the RPAG key for Meridian 1 proprietary sets.

5. "LD 12" (page 428)

   Configure the RPAG key for attendant consoles.

6. "LD 56" (page 429)

   Configure the RPA warning tone.

7. "LD 57" (page 429)

   Define the Flexible Feature Codes (RPACs).

8. "LD 58" (page 429)

Copyright © 1994–2007, Nortel Networks
Nortel Networks Confidential

Define RPA customer information.

9. "LD 58 " (page 430)

   Define RPS information.

10. "LD 58" (page 431)

    Define the RPAC information.

11. "LD 58" (page 432)

    Change the Translation Table Information.

12. "LD 18" (page 432)

    Define the ABCD table.

13. "LD 18" (page 433)

    Define the pretranslation and post-translation list numbers.

LD 15

Prompt	Response	Description
REQ:	CHG	Change existing data block.
TYPE:	FTR	Features and options data block.
CUST		Customer number
	0-99	Range for Large System and CS 1000E system.
	0-31	Range for Small System and Media Gateway 1000B.
RPA	(NO) YES	Radio Paging Allowed.

LD 16

Prompt	Response	Description
REQ	CHG	Change.
TYPE	RDB	Route Data Block.
CUST	xx	Customer number, as defined in LD 15
ROUT		Route number
	0-511	Range for Large System and CS 1000E system.
	0-127	Range for Small System and Media Gateway 1000B.
TKTP	TIE COT	Trunk route.

Copyright © 1994–2007, Nortel Networks
Nortel Networks Confidential

Prompt	Response	Description
RPA	(NO) YES	Radio Paging Route.
OPR	(YES) NO	Outpulsing Route (YES is the default if RPA = YES).

LD 14

Prompt	Response	Description
REQ	NEW CHG	New, or change.
TYPE	TIE COT	TIE trunk. Central Office trunk.
TN		Terminal number
	l s c u	Format for Large System and CS 1000E system, where l = loop, s = shelf, c = card, u = unit.
	c u	Format for Small System and Media Gateway 1000B where c = card and u = unit.
CUST	xx	Customer number, as defined in LD 15
CLS	RVEP XREP	Reverse earpiece. Do not reverse earpiece.

LD 11

Prompt	Response	Description
REQ:	CHG	Change RPAG key assignment.
TYPE:	a...a	Telephone type. Type **?** for a list of possible responses.
TN		Terminal number
	l s c u	Format for Large System and CS 1000E system, where l = loop, s = shelf, c = card, u = unit.
	c u	Format for Small System and Media Gateway 1000B where c = card and u = unit.
KEY	xx RPAG yyyy	To define an RPAG key with an RPAC (FFC), where xx is a key number and yyyy is an RPAC.

LD 12

Prompt	Response	Description
REQ	CHG	Change existing data.
TYPE	2250	Attendant console type.
TN		Terminal number
	l s c u	Format for Large System and CS 1000E system, where l = loop, s = shelf, c = card, u = unit.

Copyright © 1994–2007, Nortel Networks
Nortel Networks Confidential

Prompt	Response	Description
	c u	Format for Small System and Media Gateway 1000B where c = card and u = unit.
KEY	xx RPAG yyyy	To define an RPAG key with an RPAC (FFC), where xx is the key number and yyyy is an RPAC.

LD 56

Prompt	Response	Description
REQ	NEW CHG	New, or change.
TYPE	FTC	Flexible Tone and Ringing data block.
TABL	0-31	FTC Table Number.
SCCT	(NO) YES	Modify Software Controlled Cadences and Tones.
RPAW	x xx xx xx	Radio Paging Warning tone definition.

LD 57

Prompt	Response	Description
REQ	NEW CHG	New, or change.
TYPE	FFC	Flexible Feature Codes Data Block.
CUST	xx	Customer number, as defined in LD 15
CODE	RPAX	Radio Paging Access Code.
-RPAX	RPAX xxxx	Radio Paging Access Code. Enter Flexible Feature Code. The RPACs entered here are associated with various options in LD 58.
CODE	RPAN	Radio Paging Answer call code.
-RPAN	RPAN xxxx	Radio Paging Answer call code. Enter Flexible Feature Code.

LD 58

Prompt	Response	Description
REQ	NEW CHG	New, or change.
TYPE	RPCD	Radio Paging Customer Data Block.
CUST	xx	Customer number, as defined in LD 15

Copyright © 1994–2007, Nortel Networks
Nortel Networks Confidential

Prompt	Response	Description
RPTO		Radio Paging Tone.
	SPCL DIAL NONE	Special Dialtone. Normal Dial tone. No Tone.
		This Radio Paging tone is provided after the RPAX and RPAN.
MRPS	(NO) YES	Multiple Radio Paging Systems.
TRAN		Translation type.
	TAB TWO THR FOR NO	Table Search. Last two digits of DN. Last three digits of DN. Last four digits of DN. None. Prompt is not given when MRPS = YES and TRAN is forced to TAB.
DNLN	1-(4)-7	DN length (if TRAN = NO, TWO, THR or FOR).
RCRG	0-(6)-20 X	Number of ring cycles when recall to transferring set, before reroute to attendant. (0 is the CFNA prompt value.) Reroute to attendant.
RCTI	0-(30)-120	Time to wait for a "BUSY" transferring set to become idle.
RCAL	(NO) YES	Recall if busy from RPA.
TBTR	4-(10)-30	Time between two recall attempts (to a Meridian 1 proprietary set).

LD 58

Prompt	Response	Description
REQ	NEW CHG	New, or change.
TYPE	RPS	Radio Paging System Data Block.
CUST	xx	Customer number, as defined in LD 15
SNUM	0-15	System Number.
PSAL	1-7	Paging System Access code length.
RTIM	0-(60)-630	Length of the Recall Timer.
STO	10-(30)-630	Length of time for Screech Path to be maintained in seconds.

Copyright © 1994–2007, Nortel Networks
Nortel Networks Confidential

Prompt	Response	Description
NSTO	10-(30)-630	Length of time required for paging when no Screech Path is required.
MTO	0-(150)-630	Length of the Meet-Me Time-out timer in seconds.

LD 58

Prompt	Response	Description
REQ	NEW CHG	New, or change.
TYPE	RPAX	RPAC Data Block.
CUST	xx	Customer number, as defined in LD 15
SNUM	0-15	System Number.
RPAX	nnnn	Radio Paging Access Code.
-ROUT		Route number
	0-511	Range for Large System and CS 1000E system.
	0-127	Range for Small System and Media Gateway 1000B.
-PANN	(NO) YES	Record Paging Announcement.
--RPAR	0-511 0-127	Route Number that provides the recorded announcement. For Large Systems For Small Systems
-BYPS	(NO) YES	Bypass the DN-PSA translation. If BYPS = YES, then meet-me is not available, and the trunk is accessed directly.
--OPER	(AUTO) MANU	Automatic Operation. Manual Operation.
--EXTM	(0)-9 (If OPER = AUTO)	
--INTM	(0)-1-9	Internal Mode digit for this RPAX.
--TRDN	(0)-7 (If OPER = YES)	Transmit this number of digits of the caller's DN to the paging equipment.
-PATH	NONE SPCH RNGB	Speech Path or Ringback Speech Path. Ringback to the caller.
--TWSP	If PATH = SPCH	Two-way Screech Path with a mobile pager allowed.
	(BOTH) EXT	Internal and external calls. External calls.

Copyright © 1994–2007, Nortel Networks
Nortel Networks Confidential

Prompt	Response	Description
--ACPS	If PATH = SPCH	
	(YES) NO	Radio Paging System to provide the call-in-progress signals.
--ACPT	If PATH = SPCH or RNGB,	Call Accepted is to be detected.
	(YES) NO	When PATH = RNGB or SPCH, and ACPT = YES, Ringback is provided only when the call-accepted signal is received. Speech Path opens when the start-talk signal is received. When PATH = RNGB and ACPT = NO, Ringback is provided when all the paging digit information has been sent (ending # processed). When PATH = SPCH and ACPT = NO, Speech Path is provided when all of the paging digit information has been sent (ending # processed).
--DCHR	xxxx X	Display characters. Remove all characters.

LD 58

Prompt	Response	Description
REQ	CHG	Change.
TYPE	TBL	Translation Table access.
SNUM	0-15	System Number.
DNPS	xxxx yyyy	The DN to be translated and the number of the paging equipment to which the DN is assigned.
TABT	aaa	Table Type (Prompted when REQ = PRT)
RANG	xxxx...xxxx	Print DN Range from the first DN to the second DN (Prompted when REQ = PRT).

LD 18

Prompt	Response	Description
REQ	NEW CHG	Add, or change 16 Button Data Block.
TYPE	ABCD	16 Button Data Block.
TBNO	1-254	Table Number.
DFLT	1-254	Default function table number.
PRED	(NO) YES	Pre-dial.

Copyright © 1994–2007, Nortel Networks
Nortel Networks Confidential

Prompt	Response	Description
POST	(NO) YES	Post-dial.
CONT	(NO) YES	Control.

LD 18

Prompt	Response	Description
REQ	NEW CHG	Add, or change Pretranslation table assignment.
TYPE	PRE	Pretranslation calling group assignment.
CUST	xx	Customer number, as defined in LD 15
XLAT	0-254 0-8191	Pretranslation list (Calling group to Speed Call list correlation.)
	0-254 8191	If list number 8191 is assigned to a group, pretranslation is removed for that group.
-PRE	0-8190 X	Pretranslation Speed Call List number. Remove list.
-PST	0-8190 X	Post-translation Speed Call List number. Remove list.
-SDA	0-8190 X	Single-digit Access Speed Call List Number. Remove list.

Adding a Remote Radio Paging Flexible Feature Code

Task summary list

The following is a summary of the tasks in this section:

1. "LD 87" (page 433)

   Define a Remote radio Paging (RRPA) FFC.

2. "LD 11" (page 434)

   Configure the RPAG key for Meridian 1 proprietary sets.

3. "LD 12" (page 434)

   Configure the RPAG key for attendant consoles.

LD 87

Prompt	Response	Description
REQ	NEW CHG	Add, or change.
CUST	xx	Customer number, as defined in LD 15
FEAT	CDP	Coordinated Dialing Plan Feature.
TYPE	DSC TSC	Distant Steering Code. Trunk Steering Code.

Copyright © 1994–2007, Nortel Networks
Nortel Networks Confidential

Prompt	Response	Description
DSC	xxxx	Distant Steering Code.
-FLEN	(0)-10	Flexible Length number of digits.
-DSP	LSC LOC DN	Display.
-RRPA	(NO) YES	Remote Radio Paging Access.
-RLI	xxx	Route List to be accessed for distant steering code.
-CCBA	(NO) YES	Collect Call Blocking.
TSC	xxxx	Trunk Steering Code.
-FLEN	(0)-16	Flexible Length number of digits.
-ITOH	(NO) YES	Inhibit Time Out option.
-CCBA	(NO) YES	Collect Call Blocking.
-RLI	xxx	Route List to be accessed for trunk steering code.

LD 11

Prompt	Response	Description
REQ:	CHG	Change RPAG key assignment.
TYPE:	a...a	Telephone type. Type **?** for a list of possible responses.
TN		Terminal number
	l s c u	Format for Large System and CS 1000E system, where l = loop, s = shelf, c = card, u = unit.
	c u	Format for Small System and Media Gateway 1000B where c = card and u = unit.
KEY	xx aaa yyyy	To define an RPAG key with the RRPA FFC.

LD 12

Prompt	Response	Description
REQ	CHG	Change.
TYPE	2250	Attendant console type.
TN		Terminal number
	l s c u	Format for Large System and CS 1000E system, where l = loop, s = shelf, c = card, u = unit.
	c u	Format for Small System and Media Gateway 1000B where c = card and u = unit.
KEY	xx RPAG yyyy	To define an RPAG key with the RRPA FFC.

Copyright © 1994–2007, Nortel Networks
Nortel Networks Confidential

Feature operation

The following occurs when more than one RPS is configured per customer:

- The system number is transparent to the caller;
- The DN-PSA code translation table decides which RPS to use; and
- The trunk search is done after the DN is entered.

When one RPS is configured per customer, the trunk search is made after the FFC is entered.

Different call progress tones are provided by the RPS depending on the mode digit and state of the paging call.

Automatic pre-selection

Meridian 1 proprietary or telephone

The following are the operation steps:

Step	Action
1	Off-hook. a. Set receives dial tone.
2	Enter the RPAC (FFC) for initiating RPA. a. Set receives paging tone if FFC is valid. b. Set receives CTVN treatment if FFC is invalid. c. Set receives congestion tone (as configured) if no trunk is available in a single system.
3	Enter the DN of party to be paged. a. Set receives ringback tone, call progress tones or silence (as configured) if paging was successful. b. Set receives no tone from the system if speechpath is provided. c. Set receives CTVN treatment if DN is invalid. d. Set receives congestion tone if no paging trunks are available. e. Set receives busy tone if absence signal is received.

—End—

Copyright © 1994–2007, Nortel Networks
Nortel Networks Confidential

Attendant console

When paging from a PSTN set, the attendant can access the RPA feature using the above steps and then transfer the call (similar to transferring to a normal set).

Automatic post-selection

Single-digit post-selection access codes are not supported at Remote Radio Paging (RRPA) nodes.

Meridian 1 proprietary sets

The following are the operation steps:

Step	Action
1	Off-hook. a. Set receives dial tone.
2	Enter the DN of party desired to be reached. a. Set receives ringback or busy tone if DN is valid. b. Set receives CTVN treatment if DN is invalid.
3	Press Recall key. a. Set receives recall signal.
4	Press single digit 0 - 9 for speed call list.
5	Press single alphabetic A - D, where character is a RPAG key (for RPA) for 16-Button DTMF set.
6	Enter RPAC (FFC) for initiating RPA. a. Set receives ringback tone, call progress tones or silence (as configured) if paging was successful. b. Set receives no tone from the system if speechpath is provided. c. Set receives CTVN treatment if FFC or DN is invalid. d. Set receives congestion tone if no paging trunks are available. e. Set receives busy tone if absence signal is received.
	—End—

Attendant console

The following are the operation steps:

Copyright © 1994–2007, Nortel Networks
Nortel Networks Confidential

Step	Action
1	Off-hook. a. Set receives dial tone.
2	Enter the DN of party to be paged. a. Set receives ringback or busy tone if DN is valid. b. Set receives CTVN treatment if DN is invalid.
3	Press RPAG key (for RPA). a. Set receives ringback tone, call progress tones or silence (as configured) if paging was successful. b. If the paging call recalls, the attendant can re-extend the call. c. Set receives CTVN treatment if FFC or DN is invalid. d. Set receives congestion tone if no paging trunks are available. e. Set receives busy tone if absence signal is received.

—End—

Manual pre-selection

Meridian 1 proprietary sets

The following are the operation steps:

Step	Action
1	Off-hook. a. Set receives dial tone.
2	Enter the RPAC (FFC) for initiating RPA. a. Set receives paging tone if FFC is valid. b. Set receives CTVN treatment if FFC is invalid. c. Set receives congestion tone (as configured) if no paging trunk is available.
3	Enter the DN of party desired to be reached. a. Set receives ringback or busy tone if DN is valid. b. Set receives CTVN treatment if DN is invalid.
4	Enter mode digit.
5	Enter information to be sent.

Copyright © 1994–2007, Nortel Networks
Nortel Networks Confidential

6 Enter # for end of information.

a. Set receives ringback tone, call progress tones or silence (as configured) if paging was successful.

b. Set receives busy tone if absence signal is received.

—End—

Attendant console

When paging from a PSTN set, the attendant can access the RPA feature using the above steps and then transfer the call (similar to transferring to a normal set).

Manual post-selection

Single-digit post-selection access codes are not supported at Remote Radio Paging (RRPA) nodes.

Meridian 1 proprietary set

The following are the operation steps:

Step	Action
1	Off-hook. a. Set receives dial tone.
2	Enter the DN of party to be paged. a. Set receives ringback or busy tone if DN is valid. b. Set receives CTVN treatment if DN is invalid.
3	Press Recall key. a. Set receives recall signal.
4	Press single digit 0 - 9 for speed call list.
5	Press single alphabetic A - D, where character is a RPAG key (for RPA) for 16-Button DTMF set.
6	Enter RPAC (FFC) for initiating RPA. a. Set receives no tone from the system if speechpath is provided. b. Set receives CTVN treatment if FFC or DN is invalid. c. Set receives congestion tone if no paging trunks are available.
7	Enter mode digit.

Copyright © 1994–2007, Nortel Networks
Nortel Networks Confidential

8 Enter information to be sent.

9 Enter # for end of information.

a. Set receives ringback tone, call progress tones or silence (as configured) if paging was successful.

b. Set receives busy tone if absence signal is received.

—End—

Attendant console

The following are the operation steps:

Step	Action
1	Off-hook.
	a. Set receives dial tone.
2	Enter the DN of party to be paged.
	a. Set receives ringback or busy tone if DN is valid.
	b. Set receives CTVN treatment if DN is invalid.
3	Press RPAG key.
	a. Set receives ringback tone, call progress tones or silence (as configured) if paging was successful.
	b. If the paging call recalls, the attendant can re-extend the call.
	c. Set receives CTVN treatment if FFC or DN is invalid.
	d. Set receives congestion tone if no paging trunks are available.

—End—

Answering the paging call

Paged party

The paged party receives a paging indication followed by one of the following types of information:

- no information
- a short speech cut-through, or
- digits displayed on receiving device.

Copyright © 1994–2007, Nortel Networks
Nortel Networks Confidential

A paged party can respond after receiving the information, as in the following:

- When the information is the caller's DN, the paged party responds by initiating a normal station-to-station call.
- When the information is not telephone related, the receiving device might get a coded message to perform some action.

Pre-selection and post-selection

Meridian 1 proprietary set

The following are the operation steps:

Step	Action
1	Off-hook from any set on the system. a. Set receives dial tone.
2	Enter the FFC for answering paging calls. a. Set receives paging tone if the FFC is valid. b. Set receives CTVN treatment if FFC is invalid.
3	Enter DN of your set. a. Set is connected to the caller if the DN is valid. b. Set receives CTVN treatment if the DN is invalid or is not being paged.

—End—

Attendant console

When answering a paging call from a PSTN set, the attendant is required to make the connection. The attendant dials using the above method (FFC and DN) as if the call is being extended to another set.

Copyright © 1994–2007, Nortel Networks
Nortel Networks Confidential

Radio Paging Product Improvements

Contents

This section contains information on the following topics:

"Feature description" (page 441)

"Operating parameters" (page 441)

"Feature interactions" (page 442)

"Feature packaging" (page 443)

"Feature implementation" (page 444)

"Feature operation" (page 445)

Feature description

A Radio Paging system is a communications tool used to contact mobile parties by means of radio signals. A caller can use their telephone to page a mobile party who has a mobile portable receiving device.

This product improvement enables RPA to recall the attendant who originated the Radio Paging call only; the attendant may be located anywhere within an ISDN Meridian Customer Defined Network (MCDN) configured with Network Attendant Services (NAS).

The improvement also enables an attendant's display to display paged name, instead of answering name, on the paging party when answered, and to make network Radio Paging show the same display information as in the standalone operation. For more information about Radio Paging, please see the Radio Paging feature module in this guide.

Operating parameters

Since ISDN Basic Rate Interface (BRI) sets do not support Flexible Feature Codes (FFCs), they cannot be used to access or answer RPA calls if the BRI sets are local on the paging node. For network situations, BRI sets can

Copyright © 1994–2007, Nortel Networks
Nortel Networks Confidential

access and answer remote RPA calls. This is possible because the Radio Paging Access Code (RPAX)/Radio Paging Answering Code (RPAN) FFCs are dialed as Distant Steering Codes (DSCs)/Trunk Steering Codes (TSCs).

For Pre-selection Paging, if the paged DN following the RPAX FFC is not local to the paging node, the Call Party Name Display (CPND) name for this DN cannot be obtained to be displayed on the calling party's terminal. If the paged DN is local on the paging node and has CPND defined, the CPND can be retrieved and sent to the calling party for display purposes. For Post-selection Paging, the CPND of the paged DN will be displayed even if the DN is not local to the paging node.

If a network call comes in to a set on the paging node and is redirected to paging by Call Forward No Answer (CFNA), the calling name cannot be retrieved and updated on the answering set when the paging call is answered. This happens only if the set on the paging node has CPND defined. If the set does not have CPND defined, the calling name can updated on the answering party's set.

The following hardware is required for Radio Paging operation: Radio Paging System equipment meeting European Selective Paging Manufacturers' Association (ESPA) requirements; trunk cards (QPC296/QPC287/QPC551/QPC71/QPC237/NTD9742A/NT5K19AA) or Extended Flexible E&M (XFEM) cards (NT5K83/NT5K72/NT5K50/NT5K19).

The following hardware is required for Large Systems: PRI – NT5D97; DDP2 – NT8D72; and DCH – QPC757, NT6D11, or NT6D70 (MSDL).

The following hardware is required for Small Systems: PRI – NTAK09 with NTAK93 data port; PRI2 – NTAK79, or NTDK50 with NTBK51 DCHI data port; ISL – NTAK02.

Feature interactions

Call Detail Recording Enhancement

When an attendant makes an outgoing call (established on the source side) and then extends the call to remote radio paging on another node by using a normal trunk (for example, Trunk X), an "S" record is printed when the attendant releases to extend the call to network RPA.

If the outgoing trunk call releases before the paged call is answered, the "E" record will show the normal trunk ID (Trunk X).

If the paged call has been answered when the outgoing trunk call releases, the "E" record will show the paged DN instead of Trunk X.

Copyright © 1994–2007, Nortel Networks
Nortel Networks Confidential

Display of Calling Party Denied

If this feature is enabled (packaged under the International Supplementary features package 131), additional Classes of Service can be assigned to sets to determine whether or not their DN and CPND information will be displayed on other sets. No CPND or DN information is displayed on sets involved in a network RPA call that have name display denied or digit display denied Class of Service.

Network Attendant Services

Network Attendant Services (NAS) configuration is a requirement for the Network Radio Paging (NRPA) Recall to Same Attendant (RTSA) feature. Without NAS, NRPA RTSA is not active, and existing operation will be followed.

With NAS configured, if an RPA recall to the attendant on the originating node is not allowed, the recall will be presented on the paging node. Existing operation prior to this development is performed. There is no new interaction introduced with NAS features.

Slow Answer Recall Modification

With the Slow Answer Recall Modification (SLAM) feature enabled, when the attendant answers a recall the destination party is disconnected. This also applies to Radio Paging.

When the attendant answers a paging recall, the call is removed from the meet-me queue and the recall cannot be answered by the paging party by using RPA Answer. The paging party is put on the source side of the attendant; there is nothing connected on the destination side. The attendant cannot extend the call to paging by pressing the Release key. Pressing the Release key will disconnect the paging party from the source side and the attendant will become idle.

The attendant can extend the call to Radio Paging again by either: dialing the RPAX FFC + the DN (preselection); or dialing the DN, and while the DN is ringing or busy pressing the RPAG key (post-selection).

Feature packaging

Radio Paging (RPA) package 187 must be provisioned to activate this feature.

To gain access to RPA, Flexible Feature Codes (FFC) package 139 must be provisioned.

For the Radio Paging network recall operation, Network Attendant Service (NAS) package 159 must be provisioned.

Copyright © 1994–2007, Nortel Networks
Nortel Networks Confidential

For Remote Radio Paging, Coordinated Dialing Plan (CDP) package 59 is required to define RPA FFCs as Distant Steering Codes (DSCs) or Trunk Steering Codes (TSCs).

To display characters instead of the Radio Paging Flexible Feature Code, Calling Party Name Display (CPND) package 95 is required.

Integrated Services Digital Network (ISDN) package 145, and its dependencies, are required for operation in an MCDN ISDN network.

Feature implementation

Task summary list

The following is a summary of the tasks in this section:

1. "LD 87 " (page 444)

   Set up remote Radio Paging on originating node.

2. "LD 15" (page 444)

   In order for the Recall to Same Attendant portion of this feature to operate network wide, the Recall to Same Attendant (RTSA) prompt has to be activated on the originating node.

LD 87

Prompt	Response	Description
REQ	NEW CHG	New, or change.
TYPE	TSC DSC	Trunk/Distant Steering Code (enter RPAX/RPAN FFC defined on paging node).
TSC DSC	xxxx	Radio Paging FFC from paging node.
RRPA	(NO) YES	Remote Radio Paging option.
RLI		Route List Index of route list block used to route to paging node.

LD 15

Prompt	Response	Description
REQ:	NEW CHG	New, or change.
TYPE:	ATT_DATA	Attendant console options.
...		
- RTSA	(RSAD) RSAA RSAX	Recall to same attendant denied. Recall to same attendant allowed. Recall to same attendant with queuing on busy.

Copyright © 1994–2007, Nortel Networks
Nortel Networks Confidential

Feature operation

With ISDN NAS enabled, the RPA Recall will recall to the same attendant who originated the call. The attendant may be located anywhere in the ISDN NAS network.

When the originating attendant answers the RPA recall, the call can be extended again by simply pressing the Release key.

When the paged party answers, recall to the originating attendant will be cancelled if the attendant has not yet answered.

If the paged party answers while the paging call is recalled to the originating attendant (buzzing), the request to cancel the recall is sent from the paging node to the originating node. If the attendant answers the recall before receiving the cancel message, the attendant is connected to both the paging and answering parties.

If the RPA RTSA network wide feature is not allowed, the recall is presented on the paging node. Existing operation prior to this development is performed. The RPA RTSA network wide feature is not allowed when one of the following conditions occurs:

- The originating attendant is busy (active on a loop) and RTSA is not RSAX on the originating node.
- The originating attendant is disabled or in maintenance mode.
- The originating attendant is in Night Service.
- The originating attendant is in Position Busy mode.
- The paging call was not handled by an attendant on the originating node. This includes:
  - A set directly dials access to remote paging.
  - The call is transferred by a set to remote paging.
  - An attendant dials access to remote paging on the source side, with no other parties involved.
- The originating attendant never released to extend the paging call to the calling party (that is, the attendant has the calling set on the source side and the paging call on the destination side at recall time).

The recall time out for an RPA call is defined on the node that is directly connected to the RPA system, not the originating node from where the attendant extended the call. This is because the RPA timer is usually longer than the normal recall time out so that the paged party will have enough time to answer the call.

Copyright © 1994–2007, Nortel Networks
Nortel Networks Confidential

Copyright © 1994–2007, Nortel Networks
Nortel Networks Confidential

Radio Paging Product Improvement Continuation

Contents

This section contains information on the following topics:

"Feature description" (page 447)

"Operating parameters" (page 449)

"Feature interactions" (page 451)

"Feature packaging" (page 451)

"Feature implementation" (page 451)

"Feature operation" (page 454)

Feature description

A Radio Paging System (RPS) is a communications tool used to contact mobile parties by means of radio signals. With this system, a set can page a mobile party that is equipped with a radio paging device. The Radio Paging Product Improvement Continuation enhances the performance of the Radio Paging feature by providing the following:

- an increase in the number of digits sent to and displayed on a Radio Paging device
- the ability to activate/deactivate Pretranslation for Radio Paging calls
- five internal/external call treatments to a pager installed in the paging rack

Pager Display

With the existing Radio Paging functionality, when Calling Line Identification (CLID) information is sent to a paging device, a maximum of seven digits are displayed on the pager.

Copyright © 1994–2007, Nortel Networks
Nortel Networks Confidential

With the Radio Paging Product Improvement Continuation, however, up to 16 digits can be displayed on a pager. Therefore, it is possible for the entire CLID information to be displayed. In order to specify the number of digits (0-16) to be sent to the Radio Paging System, the Transmit Caller's DN (TRDN) prompt must be defined in LD 58.

Pretranslation

Pretranslation allows the creation of a flexible dialing plan by using Speed Call lists as Pretranslation Tables. With the Radio Paging Product Improvement Continuation, Pretranslation is activated/deactivated for Radio Paging calls by defining the Pretranslation (PRET) prompt in LD 58. This activation/deactivation takes place regardless of whether or not Pretranslation is allowed at a customer level.

Pagers installed in the paging rack

With existing Radio Paging functionality, the treatment of external calls forwarded to pagers in the paging rack is defined by the Recall if busy from Radio Paging (RCAL) prompt in LD 58. If RCAL is set to NO, the caller receives a busy tone. If RCAL is set to YES, the call is routed to the attendant. When an internal call is forwarded to a pager in the paging rack, the caller receives a busy tone.

With this Product Improvement Continuation, the user chooses what happens to internal/external calls forwarded to a pager in the paging rack. The treatment of these calls is defined by the Treatment for Internal Calls (INTR) and Treatment for External Calls (EXTR) prompts in LD 58.The INTR and EXTR prompts replace the RCAL prompt.

CAUTION
The treatment for external calls to a pager in the paging rack is **not** converted automatically. Therefore, the EXTR prompt must be defined. If EXTR is not defined, when an external call is forwarded to a pager in the paging rack, the call receives the default treatment for external calls (busy tone).

The Radio Paging Product Improvement Continuation offers the following five possibilities for the treatment of calls to pagers in the paging rack:

- The caller receives a busy tone.
- The call is routed to an attendant.
- The caller receives a special tone (SRC1-SRC8) or an announcement (with RAN equipment) delivered from the Tone and Digit Switch (TDS) card.
- The caller receives an announcement from a RAN machine.
- The call is routed to Meridian Mail.

Copyright © 1994–2007, Nortel Networks
Nortel Networks Confidential

Busy Tone

When INTR or EXTR is set to BUSY, the caller receives a busy tone.

Routed to an Attendant

When INTR or EXTR is set to ATT, the call is routed to an attendant.

Special Tone or Announcement

When INTR or EXTR is set to SRC1-SRC8, the caller receives a special tone, programmed in LD 56, or an announcement. After an announcement is provided to the caller, the call is disconnected. Recorded Announcement (RAN) equipment is required to provide this announcement.

Announcement from RAN

When INTR or EXTR is set to RAN, the caller receives an announcement from a RAN machine and is then disconnected or routed to an attendant after the message is heard. Post RAN treatment is defined by the RAN post announcement treatment (POST) prompt in LD 16.

For this enhancement to function, a RAN route must be specified by defining the Route number that provides the Recorded Announcement (RANR) prompt in LD 58. The RAN route must be specified prior to defining the RANR prompt.

Meridian Mail

When INTR or EXTR is set to MAIL, the call is routed to Meridian Mail. In this case, the caller receives an announcement stating that the call is being rerouted to Meridian Mail. With this enhancement, all Meridian Mail functions are available.

For this enhancement to function, the Meridian Mail Directory Number (MMDN) prompt must be defined in LD 58. Prior to defining the MMDN prompt, however, the Voice Automatic Call Distribution (ACD) messages queue must be defined in LD 23. The maximum input for Voice ACD is four digits or seven digits if the Directory Number Expansion (Seven Digit) (DNXP) package 150 is equipped.

Operating parameters

The Radio Paging Product Improvement Continuation is applicable on a stand-alone system with a Radio Paging system or in an Integrated Services Digital Network (ISDN) Meridian Customer Defined Network (MCDN) with a centralized Radio Paging System.

A maximum of 16 digits can be sent to Radio Paging equipment, as only 16 digits can be stored in the Calling Line Identification (CLID) field.

Copyright © 1994–2007, Nortel Networks
Nortel Networks Confidential

As per existing Radio Paging functionality, if the calling number is not available, the Route Access Code of the incoming trunk is displayed on the Radio Paging device.

If the calling number is shorter than the specified value defined at the TRDN prompt, the missing digits are replaced by zeros on the pager's display. With the existing functionality, a shorter calling number is also displayed on a pager in this manner.

If the calling number is greater than the specified value defined at the TRDN prompt, the most significant digits are displayed. The unnecessary digits are deleted.

The treatment of calls to a pager in the paging rack is only applicable if the Radio Paging device conforms to the standards of the European Selective Paging Manufacturer's Association (ESPA).

When the Recorded Paging Announcement (PANN) prompt is set to YES in LD 58, each redirected call to the paging equipment receives a recorded announcement stating that the called party is being paged. This announcement is provided even if the pager is in the paging rack.

When a pager is in the paging rack and PANN is set to YES, the caller receives an announcement stating that the pager is in the paging rack. After this announcement, the treatment, as a result of the INTR and EXTR prompts, is performed.

When the INTR or EXTR prompts are set to RAN and all Recorded Announcement (RAN) trunks are busy, the caller receives normal ringback tone. As soon as a RAN trunk becomes available, the caller hears a recorded announcement. This is as per existing RAN functionality.

Meridian Mail must be located on the same node as the paging device, in order for calls to a pager in the paging rack to be re-routed to Meridian Mail. If Meridian Mail and the paging device are not located on the same node, an error message appears at the overlay level.

When INTR or EXTR is set to Mail and the maximum number of calls to the Meridian Mail DN exceeds the limit that was set at the MAXP prompt in LD 23, the caller receives normal ringback tone. As soon as the number of calls is less than or equal to the MAXP value, the caller receives the recorded announcement or the defined Meridian Mail function. This is as per existing Meridian Mail functionality.

Copyright © 1994–2007, Nortel Networks
Nortel Networks Confidential

Feature interactions

Radio Paging Product Improvement Continuation has no specific interactions with existing features.

Feature packaging

The Radio Paging Product Improvement Continuation requires the following packages:

- Radio Paging (RPA) package 187, which requires the following package to access Radio Paging:
  - Flexible Feature Codes (FFC) package 139
- Pretranslation (PXLT) package 92

The following packages are required for Meridian Mail:

- Make Set Busy (MSB) package 17
- Basic Automatic Call Distribution (BACD) package 40
- Automatic Call Distribution Package A (ACDA) package 45
- Command Status Link (CSL) package 77
- Command and Status Link with Alpha Signaling (CSLA) package 85
- Integrated Message System (IMS) package 35
- Message Waiting Center (MWC) package 46
- End-to-End Signaling (EES) package 10
- Directory Number Expansion (Seven Digit) (DNXP) package 150 for the Meridian Mail DN (MMDN) to contain a maximum of seven digits

The following package is required for Recorded Announcement (RAN):

- Recorded Announcement (RAN) package 7

Feature implementation

Task summary list

The following is a summary of the tasks in this section:

1. "LD 58" (page 452)

   Allow or deny Pretranslation.

2. "LD 58" (page 452)

   Set the treatment and number of digits.

Copyright © 1994–2007, Nortel Networks
Nortel Networks Confidential

The Radio Paging feature must be configured prior to implementing Radio Paging Product Improvement Continuation. If Pretranslation is to be allowed, the Pretranslation feature must also be configured. Depending upon how the INTR and EXTR prompts are defined, Mail and Recorded Announcement (RAN) must be implemented.

LD 58

Prompt	Response	Description
REQ	CHG	Change existing data.
TYPE	RPCD	Radio Paging Customer Data Block.
CUST	xx	Customer number, as defined in LD 15
...		
TRAN		Translation type.
	(TAB)	Translation lookup table (default)
	TWO	Last two digits of DN
	THR	Last three digits of DN
	FOR	Last four digits of DN
	NO	No translation (DN sent as PSA code) The TRAN prompt is not given if MRPS = YES. TRAN is then forced to TAB.
- DNLN	0-(4)-16	DN length.
...		
RCTI	0-(30)-120	Time to wait for a "BUSY" transferring set to become idle. After this time, the call is routed to the attendant.
PRET	(YES) NO	Pretranslation for RPA calls (allowed) or denied.

Use LD 58 to set the internal and external treatment for calls to a pager in the paging rack, and set the number of digits of the caller's set transmitted to the paging equipment

LD 58

Prompt	Response	Description
REQ	CHG	Change existing data.
TYPE	RPAX	Radio Paging Access Code Data Block.
CUST	xx	Customer number, as defined in LD 15
RPAX	nnnn	Radio Paging Access Code. This prompt is repeated to allow multiple entries. Access Codes must be previously defined in LD 57.
ROUT		Route number
	0-511	Range for Large System and CS 1000E system.
	0-127	Range for Small System and Media Gateway 1000B.

Copyright © 1994–2007, Nortel Networks Nortel Networks Confidential

Prompt	Response	Description
PANN	(NO) YES	Recorded Paging Announcement (denied) or allowed) for this route.
- RPAR	0-511 0-127	Route number that provides the Recorded Announcement. For Large Systems For Small Systems
INTR	xxxx (BUSY) ATT SRC1-SRC8 RAN MAIL	Treatment for internal calls to a pager that is in the paging rack. Caller receives a busy tone (default). Call is routed to the attendant. Tones or announcement delivered from the TDS card which is programmed in LD 56. Call is routed to the RAN machine. Call is routed to Meridian Mail.
- RANR		RAN route number for "Authcode Last" prompt (NAUT)
	0-511	Range for Large System and CS 1000E system.
	0-127	Range for Small System and Media Gateway 1000B.
- MMDN	xxxx	Meridian Mail DN which provides the recorded announcement or the defined function. MMDN is prompted if INTR = MAIL. The MMDN may be up to four digits. However, if Directory Number Expansion (DNXP) package 150 is equipped, seven digits are allowed.
EXTR	xxxx (BUSY) ATT SRC1-SRC8 RAN MAIL	Treatment for external calls to a pager that is in the paging rack. Caller receives a busy tone (default). Call is routed to the attendant. Tones or announcement delivered from the TDS card, programmed in LD 56. Call is routed to the RAN machine. Call is routed to Meridian Mail.
- RANR		RAN route number for "Authcode Last" prompt (NAUT)
	0-511	Range for Large System and CS 1000E system.
	0-127	Range for Small System and Media Gateway 1000B.
- MMDN	xxxx	Meridian Mail DN which provides the recorded announcement or the defined function. MMDN is prompted if EXTR = MAIL. The MMDN may be up to four digits. However, if Directory Number Expansion (DNXP) package 150 is equipped, seven digits are allowed.
...		
OPER	(AUTO) MANU	Automatic operation (default). Manual operation.
- EXTM	(0)-9	External mode digit for this RPAX. EXTM is prompted when OPER = AUTO.

Copyright © 1994–2007, Nortel Networks
Nortel Networks Confidential

Prompt	Response	Description
- INTM	(0)-9	Internal mode digit for this RPAX. INTM is prompted when OPER = AUTO.
- TRDN	(0)-16	Transmit the last x digits of the caller' s DN to the paging equipment. TRDN is prompted if OPER = AUTO.
...		

Feature operation

No specific operating procedures are required to use this feature.

Copyright © 1994–2007, Nortel Networks
Nortel Networks Confidential

Recall after Parking

Contents

This section contains information on the following topics:

"Feature description" (page 455)

"Operating parameters" (page 455)

"Feature interactions" (page 455)

"Feature packaging" (page 456)

"Feature implementation" (page 456)

"Feature operation" (page 456)

Feature description

This enhancement to the Call Park feature causes a parked call to be recalled to the attendant or night DN if the attendant is in Night Service, rather than to the parking set, if not answered within a customer-defined period of time (two-minute maximum). The call may be external or internal.

Operating parameters

This feature does not apply to calls parked by Automatic Call Distribution (ACD) agents.

This feature operates in a standalone, but not in a network environment.

Feature interactions

Call Park

If the attendant is in Night Service, and a parked call is not answered within a customer-defined period of time (two-minute maximum), then the Recall after Parking feature recalls a parked call to the attendant or night DN

Copyright © 1994–2007, Nortel Networks
Nortel Networks Confidential

instead of the parking telephone. If the parked call is recalled to a multiple appearance night DN, only the first appearance of the night DN will ring. The call may be external or internal.

The recall to the attendant appears on the Recall ICI key. If the attendant is in Night Service, the recall occurs to the night DN. If the night DN is busy, the call is queued if it is an external call.

Feature packaging

The Recall After Parking feature is included in Call Park (CPRK) package 33.

Feature implementation

LD 50 - Configure Recall after Parking at the RECA prompt.

Prompt	Response	Description
...		
CPTM	30-(45)-240	Call Park Timer (in seconds). The amount of time a call is held in the parked state before recalling the parking set or the attendant.
RECA	(NO) YES	Recall Attendant. YES = unanswered parked calls recall the attendant. NO = unanswered park calls recall the parking set.

Feature operation

The recall to the attendant appears on the Recall ICI key. If the attendant is in Night Service, the recall occurs to the Night DN. If the Night DN is busy, the external calls are queued.

Copyright © 1994–2007, Nortel Networks
Nortel Networks Confidential

Recall to Same Attendant

Contents

This section contains information on the following topics:

"Feature description" (page 457)

"Operating parameters" (page 458)

"Feature interactions" (page 458)

"Feature packaging" (page 460)

"Feature implementation" (page 460)

"Feature operation" (page 461)

Feature description

The Recall to Same Attendant (RTSA) feature allows a recall to return to the attendant which last extended the call. If that attendant is busy, the recall is routed to either the first available idle attendant (option RSAA), or queued to the requested attendant until the attendant becomes idle (option RSAX). A call queued to an attendant in this way takes precedence over all other calls. Queued recalls are presented in the order in which they were queued.

The types of calls and recalls which can be queued are as follows:

- inter-attendant calls
- meter recalls
- slow answer recalls
- park recalls
- Camp-on recalls, and
- Call Waiting recalls.

Copyright © 1994–2007, Nortel Networks
Nortel Networks Confidential

Operating parameters

Attendant recalls brought about by switchhook flash, dial 0, call transfer, conference or the use of a recall key on a Meridian 1 proprietary telephone will not be affected by the RTSA feature.

RTSA will not apply to calls extended by Automatic Call Distribution (ACD) agents.

If an attendant console is maintenance or position busy, then recalls to it will be presented to the first idle attendant console, no matter which option has been specified.

If an attendant fails to answer a direct recall, that attendant console is forced into position busy, and the recall is presented to the first idle attendant.

RTSA is not supported by Centralized Attendant Service (CAS).

If the customer enters Night Service while recalls are timing for RTSA, these recalls will not be directed to the night station.

Feature interactions

AC15 Recall: Timed Reminder Recall

With the AC15 Timed Reminder Recall feature, if RTSA = RSAA the call is presented to the attendant who last extended the call, if RTSA = RSAX the call is presented to the attendant who last extended the call or put in the queue if this attendant is busy.

Attendant Forward No Answer

If the attendant does not answer a call and the Attendant Forward No Answer feature is equipped, the console is forced into the Position Busy state and the call routed to the first available idle attendant.

Attendant Overflow Position

Recalls and inter-attendant calls are not routed to the Attendant Overflow Position.

Attendant Position Busy

If an attendant console is in maintenance or Position Busy when a Recall to Same Attendant call is recalled to it, the recall is presented to the first available idle attendant. If an attendant goes into Position Busy with a Return to Same Attendant call in Call Waiting, the waiting call is presented to the first available attendant.

Automatic Call Distribution

Recall to Same Attendant does not apply to calls extended by Automatic Call Distribution agents.

Copyright © 1994–2007, Nortel Networks
Nortel Networks Confidential

Call Forward No Answer

If the attendant does not answer a call and the Attendant Forward No Answer feature is equipped, the console is forced into the Position Busy state and the call routed to the first available idle attendant.

Call Waiting Options

All options for call-waiting calls do not apply to calls queued to a specified attendant. The exception to this is the display call waiting key, which shows the number of calls in the overall attendant queue and the calls in the queue for a specified attendant.

Centralized Attendant Service

Centralized Attendant Service does not support the Recall to Same Attendant feature.

Flexible Attendant Call Waiting Thresholds

The Recall to Same Attendant (RTSA) feature has precedence over the Flexible Attendant Call Waiting Thresholds (FACWT) feature. If either RSAA or RSXA options are selected, RTSA has precedence over FACWT in determining the Call Waiting Lamp state. If one or more RTSA calls are waiting in the attendant queue, RTSA will set the Call Waiting Lamp state to wink (30 impulses per minute).

RTSA calls are not included when the FACWT feature determines the number of calls waiting.

Group Hunt

Calls redirected from a group hunt list via the listed DN or flexible attendant DN, and transferred back to the Pilot DN, are recalled if the Slow Answer Recall Timer expires. However, in practical configurations, the hunt terminates on the entry with the listed DN or attendant DN before the Slow Answer Recall Timer expires; consequently, the call is not redirected to that DN and presented on the applicable ICI key on the console. Therefore, the call is never presented as a recall, so that Recall to the Same Attendant does not apply.

Idle Extension Notification

An Idle Extension Notification recall will always recall to the same attendant, regardless of the configuration of the Recall to Same Attendant (RTSA) feature.

Multi-Party Operations

Users of analog (500/2500-type) telephones can perform an attendant recall during a two-party connection by performing a switchhook flash and then dialing the attendant DN.

Copyright © 1994–2007, Nortel Networks
Nortel Networks Confidential

Multi-Tenant Service

If a specified attendant is in maintenance or Position Busy, the recall first tries to terminate at another attendant within the same console group, and then to the night DN.

Network Attendant Service

This feature operates on a network-wide basis for the following call types:

- Slow Answer Recall
- Camp-on Recall, and
- Call Waiting Recall.

The operation of this feature is affected by the programming for the option in the Customer Data Block of the system where the attendant answering the call resides.

Periodic Pulse Metering

Meter recalls are returned to the same attendant whether Recall to Same Attendant is allowed or not. If Return to Same Attendant with Queuing on Busy (RSAQ) is selected as an option, the recalls are queued to a specified attendant.

Ring Again on No Answer

A telephone that is recalling the attendant cannot apply Ring Again on No Answer.

Tenant Service

Recall to Same Attendant applies to Tenant Service. If a specified attendant is in maintenance or Position Busy, the recall first tries to terminate at another attendant within the same console group, and then to the night DN.

Voice Messaging

Recall to Same Attendant does not apply to recalls from the Voice Messaging System.

Feature packaging

This feature is included in base system software.

Feature implementation

LD 15 - Modify data for each customer member to be configured.

Prompt	Response	Description
REQ	CHG	Change.
TYPE	ATT_DATA	Attendant console options

Copyright © 1994–2007, Nortel Networks
Nortel Networks Confidential

Prompt	Response	Description
...		
RTSA	(RSAD) RSAA	Recall to same attendant (denied) allowed.
	RSAX	Recall to same attendant allowed, with queuing on busy attendant.

Feature operation

If the requested attendant is idle, a recall to it will be presented on the loop key, and on the corresponding MTR, IAT, or RLL Incoming Call Indicator (ICI) key.

When a recall is queued specifically for an attendant, this will be indicated on the attendant console by a wink lamp state for the Call Waiting lamp.

Copyright © 1994–2007, Nortel Networks
Nortel Networks Confidential

Copyright © 1994–2007, Nortel Networks
Nortel Networks Confidential

Recall with Priority during Night Service

Contents

This section contains information on the following topics:

"Feature description" (page 463)

"Operating parameters" (page 463)

"Feature interactions" (page 463)

"Feature packaging" (page 463)

"Feature implementation" (page 464)

"Feature operation" (page 464)

Feature description

This feature (RPNS) places a priority level on the order in which calls queued to a Night DN are processed as follows:

- recall of an external call
- a new external call, and
- other calls.

This is the normal order during day processing.

Operating parameters

Due to the prioritizing of call processing, low priority calls may remain queued for a long time before being processed.

Feature interactions

There are no feature interactions associated with this feature.

Feature packaging

International Supplementary Features (SUPP) package 131.

Copyright © 1994–2007, Nortel Networks
Nortel Networks Confidential

Feature implementation

LD 15 - Configure Recall with Priority during Night Service.

Prompt	Response	Description
REQ:	CHG	Change.
TYPE:	NIT	Night Service options
...		
- RPNS	(NO) YES	(Deny) allow Recall with Priority during Night Service.

Feature operation

The recall to the attendant appears on the Recall ICI key. If the attendant is in Night Service, the recall occurs to the Night DN. If the Night DN is busy, the external calls are queued.

If there is an occurrence of several calls of the same type to a station, the calls are presented to the station in their chronological order of arrival.

Copyright © 1994–2007, Nortel Networks
Nortel Networks Confidential

Recorded Announcement

Contents

This section contains information on the following topics:

"Feature description" (page 465)

"Operating parameters" (page 466)

"Feature interactions" (page 466)

"Feature packaging" (page 467)

"Feature implementation" (page 467)

"Feature operation" (page 469)

Feature description

The Recorded Announcement (RAN) feature allows the system to connect calls automatically to a customer-provided Recorded Announcement machine. Recorded Announcements can be used for:

- Automatic Call Distribution (ACD)
- Automatic Wake Up
- Intercept Treatment (INTR)
- Recorded Overflow Announcements (ROAs), and
- Network Queuing feature, which has Call Back Queuing (CBQ), Coordinated Call Back Queuing (CCBQ), Call Back Queuing to Conventional Main (CBQCM), and Off-Hook Queuing (OHQ).

The system software detects calls to connect to the Recorded Announcement (RAN) machine, determines the Intercept Treatment required, and connects the call to the proper Recorded Announcement. The system then monitors the RAN machine.

Copyright © 1994–2007, Nortel Networks
Nortel Networks Confidential

The system provides the software programs to control the announcement recorder and the circuit packs. Two types of circuit packs can be used:

- Recorded Announcement (RAN) Trunk Cards (QPC74) contain four identical trunk circuits for the interface between the system and the announcement machine. See *Circuit Card Reference (NN43001-311)* for engineering information. When the QPC74 is used, all ports on the card must be dedicated as TYPE RAN or TYPE MUS.
- Universal Trunk Cards (NT8D14AA) contain eight identical trunk circuits that can be configured independently in the system software. See *Circuit Card Reference (NN43001-311)* for a description.

Operating parameters

Dial access to RAN trunk groups is allowed and is limited only by Trunk Group Access Restrictions (TGARs).

When the QPC74 is used, all ports on the card must be dedicated as TYPE RAN or TYPE MUS.

Feature interactions

Conference, No Hold Conference

A RAN trunk cannot be Conferenced or No Hold Conferenced.

Collect Call Blocking

A RAN route is defined as having CCBA YES or NO, which is used if Coordinated Dialing Plan (CDP) or ACD queues were not used to get to the RAN route. If the call is routed through ACD/CDP to terminate on RAN, the Collect Call Blocking (CCB) treatment will depend upon the CCB data of the ACD/CDP, and not of the RAN route.

FCC Compliance for DID Answer Supervision

With FCC Compliance for DID Answer Supervision, incoming DID calls that are intercepted to a Recorded Announcement (RAN) are provided with answer supervision.

Group Hunt

Calls which are queued against the Group Hunt Pilot DN cannot receive Recorded Announcement.

Recovery on Misoperation of Attendant Console

If a Recorded Announcement is given to the destination side that has been intercepted, the connection to the destination side is considered as invalid. Therefore, if the attendant tries to extend the source to the destination using the RELEASE key or another LOOP key, the operation is ignored. The attendant must first press the RELEASE DESTINATION key to release

Copyright © 1994–2007, Nortel Networks Nortel Networks Confidential

the destination, and then extend the call to the source. If the HOLD key is pressed, the source party is put on hold and the Recorded Announcement is disconnected on the destination side.

Source Included when Attendant Dials

The source is included in a conference involving the attendant, the source, and Recorded Announcement or music treatment. Intrusion tone is not provided in this case.

Trunk Traffic Reporting Enhancement

The Trunk Seizure Option is not supported on RAN trunks.

Feature packaging

Recorded Announcement (RAN) package 7, which requires Intercept Treatment (INTR) package 11.

Feature implementation

Task summary list

The following is a summary of the tasks in this section:

1. "LD 16" (page 467)

   Enable Recorded Announcement (RAN) trunk route.

2. "LD 14" (page 468)

   Enable Recorded Announcement (RAN) trunk.

LD 16

Prompt	Response	Description
REQ	NEW CHG	Add, or change.
TYPE	RDB	Route Data Block.
CUST	xx	Customer number, as defined in LD 15
ROUT		Route number
	0-511	Range for Large System and CS 1000E system.
	0-127	Range for Small System and Media Gateway 1000B.
TKTP	RAN	RAN trunks.
All RAN route members must be removed before the route can be removed.		

Copyright © 1994–2007, Nortel Networks
Nortel Networks Confidential

Prompt	Response	Description
RTYP	CAP	Code-a-Phone recording device. Software allows announcements of up to 608 seconds.
	AUD	Audichron recording device (required when connecting to a Universal Trunk Card). Software allows announcements of up to 64 seconds.
	CK2	Cook Electric recording device. Software allows announcements of up to 64 seconds.
	DGT	Digital Recorders 213300 & 213400. Software allows announcements of up to 256 seconds.
	CON	NT7M series digital recorders. Software allows announcements of up to 608 seconds.
REP	1-15	Number of times the announcement repeats during each connection.
POST	ATT	Call is routed to attendant after specified number of repetitions (applies to Direct Inward Dial [DID] calls on Intercept).
	DIS	RAN is removed after a specified number of repetitions.
STRT	IMM	Call connects immediately to announcement.
	DDL	Call connects to announcement at the start of announcement.
ASUP	(NO) YES	Supervision (is not) or is required to inform the Central Office (CO) when the call is answered.
ACOD	xxx...x	Trunk route access code.
All RAN route members must be removed before the route can be removed.		

LD 14

Prompt	Response	Description
REQ	NEW CHG	Add, or change.
TYPE	RAN	RAN trunk data block.
TN		Terminal number
	l s c u	Format for Large System and CS 1000E system, where l = loop, s = shelf, c = card, u = unit.
	c u	Format for Small System and Media Gateway 1000B where c = card and u = unit.
CUST	xx	Customer number, as defined in LD 15
RTMB		Route number and Member Number
	0-511 1-4000	Range for Large System and CS 1000E system.
	0-127 1-4000	Range for Small System and Media Gateway 1000B.

Copyright © 1994–2007, Nortel Networks
Nortel Networks Confidential

If a night table is used with Network Automatic Call Distribution (NACD), the FROA and FRT values in LD 23 need to be set for the Recorded Announcement feature. FROA should be "NO" and FRT should be four seconds greater than the last entry time of the night table.

Feature operation

No specific operating procedures are required to use this feature.

Copyright © 1994–2007, Nortel Networks
Nortel Networks Confidential

Copyright © 1994–2007, Nortel Networks
Nortel Networks Confidential

Recorded Announcement Broadcast

Contents

This section contains information on the following topics:

"Ring Again" (page 531)

"Operating parameters" (page 481)

"Feature interactions" (page 482)

"Feature packaging" (page 484)

"Feature implementation" (page 484)

"Feature operation" (page 494)

Feature description

The Recorded Announcement Broadcast (RANBRD) feature expands the existing functionality of the Recorded Announcement (RAN) feature. Previously, the Recorded Announcement (RAN) feature used one-to-one connection between a calling party and a designated RAN trunk connected to a physical Recorded Announcement machine. Therefore, if four calling parties were receiving RAN treatment then four RAN trunks were occupied to provide this functionality.

The Recorded Announcement Broadcast feature eliminates the need for multiple cross-connections to provide recorded announcement. With this feature, multiple calling parties receive RAN treatment from one RAN trunk. Thus allowing a RAN trunk to simultaneously broadcast announcements to a maximum of 48 calling parties per RAN trunk. This expansion maximizes the usage of available RAN trunks.

This feature also introduces the following enhancements:

- Incremental Software Management limits
- RAN signalling capabilities
- Multi-Channel RAN Machine Types and Modes

Copyright © 1994–2007, Nortel Networks
Nortel Networks Confidential

- Message Staging Through Queuing Thresholds for Delay Dial Start/Stop RAN machines
- Music on Waiting
- Traffic Study Option

Each of the above enhancements are discussed in the sections that follow.

Incremental Software Management limits

Two new License limits on Broadcast Routes and Broadcast Connections are introduced with this feature.

LD 22 is modified to print the new License information on RAN Broadcast connections that is introduced for the RAN Broadcast feature. The existing SLT command prints the License information for the system.

Customers can modify License parameters via keycode. A keycode is a machine-generated digitally signed list of customer capabilities and authorized software release. A security keycode scheme protects License parameters.

To expand License limits, customers must order and install a new keycode. This installation is performed using the Keycode Management feature. All Keycode Management commands are executed in LD 143. For further information on keycode installation, see *Communication Server 1000M and Meridian 1 Large System Upgrade Procedures (NN43021-458).*

For further information on Incremental Software Management, see *Features and Services Reference (NN43001-106).*

Broadcast Routes

The License limit on broadcast routes is based on the number of broadcasting RAN routes available on a system. A new License header in LD 16 indicates License broadcasting RAN information for the system. This information is updated as each new RAN broadcasting route is configured by the customer. The upper License limit for broadcast routes is 511 for Large Systems and 127 for Small Systems. Table 40 "New Broadcast RAN Routes License Information in LD 16" (page 472) shows the Broadcast RAN Route License information that is added to the header in LD 16.

Table 40
New Broadcast RAN Routes License Information in LD 16

RAN RTE	AVAIL: xx	USED: xx	TOT: xx

Copyright © 1994–2007, Nortel Networks
Nortel Networks Confidential

Broadcast Connections

The License limit on broadcast connections is based on the number of broadcast RAN connections available on the system. Additional broadcast RAN connections can be purchased incrementally. A new License header in LD 14 indicates License broadcasting RAN connections License information for the system. Table 41 "New Broadcast RAN Connections License information in LD 14" (page 473) shows the Broadcast RAN Connections License information that is added to the header in LD 14.

Table 41
New Broadcast RAN Connections License information in LD 14

TNS	AVAIL: xxxxx	USED: xxx	TOT: xxxxx
RAN CON	AVAIL: xxxx	USED: xxx	TOT: xxxx

As each new broadcasting RAN trunk is configured, the number of available broadcast connections is subtracted from the maximum number of broadcast connections to the RAN trunk. Any calling party that is listening to a recorded announcement through a broadcasting RAN trunk represents a broadcast connection.

The following scenario provides a detailed example of the new License limits that are applicable to this feature. Assume that a customer has an upper License limit of 5 broadcast RAN routes and an upper License limit of 240 broadcast connections. When the customer defines a new broadcast RAN route, the new number of available broadcast RAN is equal to the upper limit less 1, in this case that would be 4 broadcast RAN routes. When the customer configures 2 RAN trunks for the RAN route in LDs 14 and 16 broadcast connections to each trunk. The number of available broadcast connections is now equal to the upper limit less the number of configured broadcast RAN connections. So, in this scenario the customer has a total of 208 (240 -16-16=208) broadcast connections and a total of 4 broadcast RAN routes.

RAN Signaling

Immediate Start

With immediate start RAN signaling, the calling party is connected to the recorded announcement immediately. With this signaling, calling parties barge-in on the announcement. Therefore, the calling party can be connected to the announcement such as the beginning, middle or end.

The RAN Broadcast feature allows immediate start configuration the option of receiving Music On Hold to calling parties waiting for RAN treatment.

Copyright © 1994–2007, Nortel Networks
Nortel Networks Confidential

Delay Dial

With delay dial RAN signaling, the calling party is only connected at the start of a recorded announcement. With RAN Broadcast, calling parties can have the option of Music On Hold while waiting for the start of the announcement.

Multi-Channel RAN Machine Types and Modes

Multi-Channel corresponds to multiple RAN channels that can be configured within one RAN trunk route. In a Multi-Channel RAN route, each trunk has its own dedicated RAN channel on a physical RAN machine. Multi-Channel RAN routes do not support the cross connecting (daisy chains) of multiple trunk ports together so that several callers hear the same RAN message.

As an example in Multi-Channel RAN configuration, a Level Start/Stop Multi-Channel (MLVL) route could have trunk ports each configured with its own RAN channel. Each trunk could be assigned several RAN Broadcast connections. If the message is 15 seconds long, then queuing could be configured to start playing a message every 3 seconds.

The new multi-channel machine types - Continuous Mode Multi-Channel (MCON), Pulse Start/Stop Multi-Channel (MPUL) and Level Start/Stop Multi-Channel (MLVL) - are not linked to RAN machine or a given trunk. All trunks belonging to the RAN route are considered independent. RAN trunks and RAN machine channels are connected one to one. Accordingly, if one RAN trunk is detected as faulty then all other trunks are not impacted.

For these new RAN machine types, the maximum length of the recorded announcement is configured is two hours. The meaning of a ground signal received from the RAN machine (play or idle) is configured in LD 16. This prompt was previously only applicable to XFEM RAN trunks.

These new RAN machine types are applicable to broadcasting and non broadcasting RAN routes.

Recorded Announcement Broadcast supports two machine modes: Continuous and Start/Stop. Both modes support immediate start and delay dial configurations.

Table 42 "RAN modes and Hardware" (page 474) outlines the hardware requirements and new RAN modes. RAN Broadcast requires an external RAN machine and a RAN trunk card.

Table 42
RAN modes and Hardware

	Types of RAN Modes		
Hardware	Continuous	Level Start/ Stop	Pulse Start/ Stop

Copyright © 1994–2007, Nortel Networks
Nortel Networks Confidential

QPC (X74)	X		X
XUT (NT8D14)	X		
EXUT (NT8D14)	X	X	X
XFEM (NT5K83)	X		X
Integrated Recorded Announcer (NTAG36)	X	X	

As shown in Figure 12 "Integrated Record Announcer Hardware" (page 475), the Nortel Integrated Record Announcer card eliminates the need for an external RAN machine. The Integrated Record Announcer emulates the Extended Universal Trunk (EXUT) card capabilities and provides built-in, physical RAN channels.

Figure 12
Integrated Record Announcer Hardware

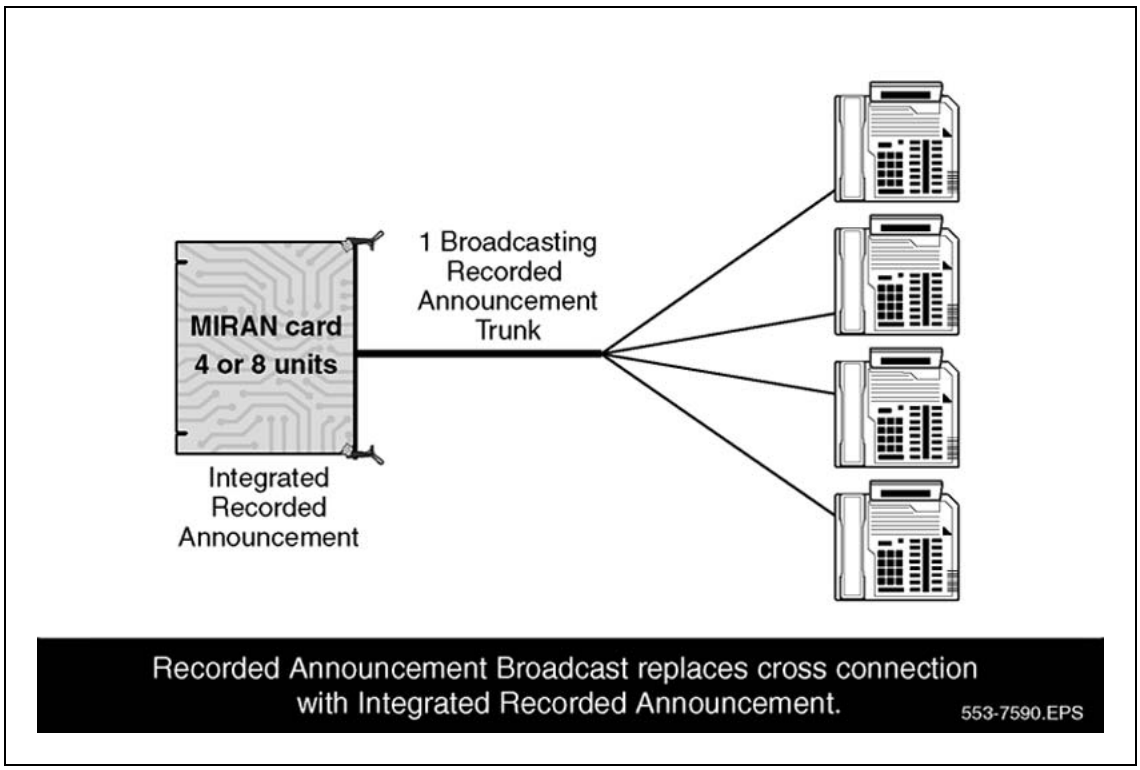

Copyright © 1994–2007, Nortel Networks
Nortel Networks Confidential

Continuous Mode

In Continuous mode, the recorded message is repeatedly played over and over. Calling parties requiring RAN treatment barge in on a playing message or receive ringback tone until the message starts over.

In Continuous mode, the maximum recommended amount of connections is between 10 and 16 connections per broadcasting RAN trunk. This amount depends on the following factors: CPU performance, answer supervision and delay between two announcements. This engineering requirement exists due to the fact that the system does not control the RAN channel. In Continuous mode, the message is continually running a recorded message with a short delay (usually less than 500 ms) between two announcements. If a RAN trunk is already broadcasting a recorded message to 12 calling parties and 12 calling parties require RAN treatment, then at the end of the message the system must disconnect these callers and connect the next calling parties before the message plays again.

Accordingly, the 12 connection limitation prevents the calling parties from hearing a RAN message that has already started playing. This value of 12 can be increased depending on the system specifications. As an example, a delay between two announcements that is greater than 500 ms. If answer supervision is not returned when the calling party connects to the recorded announcement, then up to 24 connections per Continuous mode RAN trunk are supported.

Recorded Announcement Broadcast introduces a new Continuous mode machine type called Continuous Mode Multi-Channel (MCON). Independent (asynchronous) RAN trunks can belong to a MCON RAN route which was not permitted with the existing Audichron/Cook 211 (AUD), NT7M Digital Recorders (CON) or 213300 and 213400 Digital Recorders (DGT) Continuous mode machine types.

Figure 13 "RAN Broadcast using Start/Stop or Continuous Mode Configuration" (page 477) illustrates RAN Broadcast using Start/Stop or Continuous Mode configuration.

Copyright © 1994–2007, Nortel Networks
Nortel Networks Confidential

Figure 13
RAN Broadcast using Start/Stop or Continuous Mode Configuration

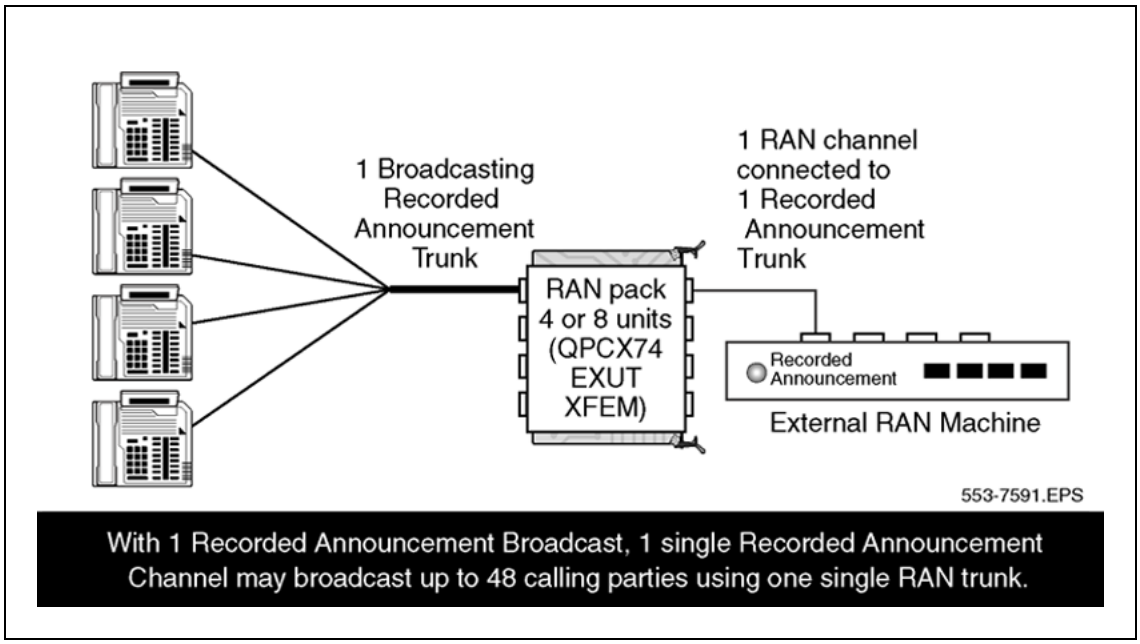

Start/Stop Mode

In Start/Stop mode, the recorded message does not begin to play the recorded announcement until a start pulse signal is received from the RAN machine. There are two types of Start/Stop mode: Pulse Start/Stop and Level Start/Stop.

With Start/Stop configuration, the system controls when the RAN message starts and stops. Therefore, if 30 calling parties require RAN treatment, the system waits to start the recorded announcement until all 30 callers are ready to be connected. When the message is finished playing, the system disconnects all 30 callers and waits until the next 30 callers are queued before sending a message to the RAN machine to start playing the message. The recommended value for the maximum number of connections per broadcast start/stop trunk is 30. Again, this value can be increased depending on the system specifications. As an example, if the answer supervision signal is not returned when the calling party connects to the recorded announcement, then up to 48 connections per Start/Stop RAN trunk are supported.

With Pulse Start/Stop, the start signal is pulse. This pulse activates the playback of the recorded announcement. The announcement is played until completion. All other start pulses are ignored until the announcement has finished.

Copyright © 1994–2007, Nortel Networks
Nortel Networks Confidential

With Level Start/Stop, the start signal is a level. The leading edge of the start signal initiates the playback of the recorded announcement. This continues until either the trailing edge of the start signal occurs or the announcement has finished. When a trailing edge is detected, the recorded announcement is terminated and level start signal is sent to the RAN machine to immediately reset the recorded announcement.

Recorded Announcement Broadcast introduces two Start/Stop mode machines types called Pulse Start/Stop Multi-Channel (MPUL) and Level Start/Stop Multi-Channel (MLVL).

Message Staging

Recorded Announcement Broadcast allows the staging of recorded announcement for Delay Dial Start/Stop Machines. The staging of announcements is controlled by the queuing thresholds programmed in LD 16 for Delay Dial Start/Stop machines. With staging, if several copies of a recorded announcement are available on different RAN ports, then the start time of the recording can be staggered. For queued calling parties, this decreases the waiting time to hear the start of the announcement.

In Continuous modes, the staging of announcements is determined by the RAN machine.

Queuing Thresholds for Delay Dial Start/Stop Machines

The Recorded Announcement Broadcast feature introduces two new queuing thresholds for Start/Stop RAN machines configured with Delay Dial signaling (STRT=DDL in LD 16).

These new queuing thresholds allow customers to stagger recorded announcements using both time and number of calls as threshold triggers. Queuing thresholds optimizes a calling party's waiting time and the number of calls waiting to receive RAN treatment.

As an example, a customer has a recorded announcement that is 15 seconds in length. This announcement is used in a high volume Automatic Call Distribution (ACD) environment. In this scenario, a calling party requiring RAN treatment can range between 1 to 30 at any given time. With RAN Broadcast the 15 second message can be staggered. With this arrangement, 5 trunk ports could be configured in a RAN broadcast route with each trunk provisioned with 10 RAN broadcast connections. The message could then programmed to play every 3 seconds or when 10 caller are queued (TITH = 3 and NCTH = 10 in LD 16). In this configuration, each of the 5 trunks would be connected to individual RAN channels with each channel having the identical 15 second message. The calling party would only have to wait a maximum of 3 seconds before receiving a recorded announcement message.

Copyright © 1994–2007, Nortel Networks
Nortel Networks Confidential

With the new queuing thresholds, when the waiting or the number of calls threshold is met or exceeded the system searches for an available RAN Trunk and connects all queued callers waiting for a recorded announcement. If the system cannot locate an available trunk, then the waiting calls are requeued without a threshold so that waiting callers are connected to a RAN trunk as soon as it becomes available.

However, if RAN trunks are not available then callers are requeued without a threshold until the next RAN trunk is available. At this point, all threshold exceeded callers listen to the recorded announcement.

If no time or number threshold is configured, then all queued parties are connected to the first available RAN trunk. This includes callers that have just been queued by the system. Therefore, the system does not assign any priority to waiting callers when no thresholds have been configured.

Music on Waiting

Recorded Announcement Broadcast feature supports music on waiting for queued callers on both broadcasting and non-broadcasting RAN trunks. With this enhancement, music is provided when a calling party is queued to receive a recorded announcement. A selected music source is provided to waiting callers until the system locates an available RAN trunk. The music on waiting enhancement replaces ringback tone.

Traffic Study Option

The Traffic Period Option (TPO) allows a customer to enhance their TFC002 reports to accumulate trunk usage data after every traffic period instead of accumulating usage only after a call disconnects. With this option enabled in LD 17, the Common Channel Signaling (CCS) associated with lengthy calls is reported in each traffic report interval throughout the duration of the call.

Previously, this feature did not apply to RAN and Music trunks. However, with the introduction of the RAN Broadcast feature, changes are made to the Trunk Traffic Reporting Enhancement with the introduction of TFC111. The TFC111 report provides information on the usage of broadcasting routes.

For the TFC111 to be output, the customer report number 11 must be selected using the SOPC command in LD 2. For example, for Customer 0, SOPC 0 11 is entered. To print the TFC111 report, the TOPC command in LD 2 is used. For example, for Customer 0, TOPC 0 11 is entered. The TFC 111 report is also printed when automatic traffic reports are scheduled in LD 2.

A traffic message is output each time the number of active broadcasting connections is equal to the system's License limit.

The new TFC111 report provides the following information:

- the trunk type

Copyright © 1994–2007, Nortel Networks
Nortel Networks Confidential

- the number of successful broadcast connections of the trunk associated with route
- the average duration of broadcast connects for route
- the average waiting time for RAN requests
- the maximum waiting time for RAN requests
- the waiting time threshold peg count
- the number of waiting parties threshold peg count
- the broadcast connection peg count for three lowest usage trunks

Table 43 "New Customer Traffic Measurement Outputs" (page 480) is an example of the customer report, TFC 111, for RAN Broadcast routes.

Table 43
New Customer Traffic Measurement Outputs

System ID 0200	TFC111	
Customer Number 000		
Route Number 031	Trunk Type RAN	
Successful broadcast connections peg count 000817	Average call duration 00006	Average waiting duration 00004
Maximum waiting time 00007	Waiting time threshold peg count 00000	Number of waiting parties threshold peg count 00000
Broadcast connections peg count for lowest trunk usage 00000	Broadcast connections peg count for next to lowest trunk usage 00000	Broadcast connection peg count for second lowest trunk usage 00002

Maximum number of connections per broadcasting RAN trunk

Table 44 "Recommended maximum number of connections per trunk" (page 481) shows the maximum number of connections per broadcasting RAN trunk that can be configured. These values depend on system configuration; therefore, some systems can allow greater values or request lower values.

When no answer supervision signal is to be returned at the time the caller receives the announcement, more connections are supported. This is the case with unsupervised trunks, internal calls, or when the answer signal has already been sent.

Copyright © 1994–2007, Nortel Networks
Nortel Networks Confidential

If answer supervision is returned, there is a high impact on real-time. Therefore, it is recommended that the maximum number of connections per RAN trunk be set to a lower value (see Table 44 "Recommended maximum number of connections per trunk" (page 481)).

To achieve maximum efficiency, TFC111 and the TITH and NCTH thresholds can be used. For instance, the difference between the number of times TITH was met and NCTH was met provides an indication of how the system reacts to the incoming RAN request rate. In the case of a high rate, a greater number of NCTH was met than TITH. This indicates that the number of connections is insufficient.

Table 44
Recommended maximum number of connections per trunk

RAN mode	Is answer supervision returned when RAN is provided?	Recommended maximum number of connections per RAN trunk
Continuous mode with less than 500ms between two announcements	Yes	up to 12
Continuous mode with less than 500ms between two announcements	No	up to 24
Start/Stop mode	Yes	up to 30
Start/Stop mode	No	up to 48

Operating parameters

The Recorded Announcement Broadcast feature is applicable to RAN routes only.

The Integrated Recorded Announcer card provides a multi-tasking environment for certain voice processing intensive applications, such as RAN and Music on Hold. This card stores recorded music and announcements in flash memory using two audio ports. The setup or modification of sound files is done using a set or a TTY. This card stores recorded music and announcements in flash memory or PCMCIA flash memory cards. Music can be played from an analog source, such as a Compact Disc (CD) player or a Muszac source, through the Integrated Recorded Announcer card. It is not a requirement that Music be recorded within the Integrated Recorded Announcer. The card plays music from other sources.

Copyright © 1994–2007, Nortel Networks
Nortel Networks Confidential

When configuring this feature, the mode supported by the external RAN machine and system hardware must match. The EXUT card supports continuous, pulse start/stop and level start/stop. The XFEM card supports continuous and pulse start/stop modes. The Integrated Recorded Announcer card supports continuous and level start/stop modes.

The Integrated Recorded Announcer card is associated with a certain port on the EXUT card. Each recorded announcement can be associated with more than one port at one time.

Traditional Recorded Announcement and Recorded Announcement Broadcast can exist on the same system.

If using a Start/Stop RAN machine, it is recommended that both the Waiting Time Threshold (TITH prompt) and the Number of Calls Waiting Threshold (NCTH prompt) be configured.

The Waiting Time Threshold (TITH) and the Number of Calls Waiting Threshold (NCTH) prompts should be configured to minimize caller's waiting time. TITH should be set to the length of the RAN message divided by the number of RAN trunks. NCTH should be set to the maximum number of connections per trunk divided by the number of RAN repetitions. All RAN trunks should have the same number of allowed connections to trigger RAN starts.

The continuous mode multichannel, the level start/stop multichannel and the pulse start/stop multichannel all support independent RAN trunks.

A RAN route can be modified to disallow broadcasting, provided that all trunks do not have any active calls connected when changes are made. When modifying a RAN route to allow broadcasting, the number of available License RAN connections must be sufficient or the change is not permitted.

In customer situations with high RAN usage, continuous RAN is recommended. In situations with a fluctuating or low incoming rate, a start/stop RAN with thresholds configured at a low value is recommended.

Feature interactions

Answer Supervision

Answer Supervision is provided based on the configuration of the RAN route. When music is provided to queued callers waiting for an announcement, the answer supervision is returned as though the recorded announcement was given.

Copyright © 1994–2007, Nortel Networks Nortel Networks Confidential

Automatic Call Distribution, Recorded Overflow Announcement

Automatic Call Distribution (ACD) and Recorded Overflow Announcement (ROA) allows queued calls to an ACD agent or attendant to be routed to a recorded announcement informing the calling party of the delay. If music is selected between the first and second recorded announcement, queued calls can be routed to a second announcement if they are still waiting in the queue.

When Music on Waiting is configured for the second RAN route, the music source selected by the Automatic Call Distribution or Recorded Overflow Announcement feature, already provided to a queued call, is not replaced by the one selected by the second RAN route when this queued call is waiting to be connected to the second RAN.

Automatic Wake Up

Automatic Wake Up (AWU) broadcast capability is independent of the RAN broadcast capability. AWU broadcast is only applicable to AWU trunks.

Incremental Software Management

The License limits introduced by this feature impact the number of units available and used by the Incremental Software Management feature. The License header at the start of LD 14 is updated to indicate the broadcast RAN connections License information on the system.

INIT ACD Queue Call Restore

ACD calls queued for receiving RAN are restored by the INIT ACD Queue Call Restore feature following system initialization. All other calls queued for RAN are dropped, and the callers hear silence.

If system initialization occurs when an Automatic Call Distribution (ACD) call is being greeted by ACD RAN, the RAN greeting is automatically disconnected. If the call is restored by the INIT ACD Queue Call Restore feature, the call is presented to the appropriate ACD Directory Number as a new call.

When system initialization occurs, Music on Waiting is stopped and the restored call is presented to the ACD DN as a new call.

Integrated Call Center Management

Integrated Call Center Management (ICCM) broadcast capability is independent of the RAN Broadcast capability. ICCM broadcast is only applicable to IVR voice ports.

The script command GIVE RAN<RAN route number> connects a call to the specified RAN route and the RAN broadcast feature will apply if applicable.

Copyright © 1994–2007, Nortel Networks
Nortel Networks Confidential

Music Broadcast

The Music Broadcast feature is applicable to Music only, and the RAN Broadcast feature is applicable to RAN only.

Feature packaging

The Recorded Announcement Broadcast (RANBRD) feature is package 327. The following packages are also required:

- Recorded Announcement (RAN) package 7
- Intercept Treatment (INTR) package 11

Feature implementation

Task summary list

The following is a summary of the tasks in this section:

1. "LD 16" (page 486)

   Define Continuous RAN Route.

2. "LD 16" (page 487)

   Define Immediate Start/Stop RAN Route.

3. "LD 16" (page 488)

   Define Delay Dial Start/Stop RAN Route.

4. "LD 14 " (page 489)

   Define new RAN Trunk.

5. "LD 16" (page 490)

   Define Continuous RAN route with Integrated Recorded Announcer.

6. "LD 16" (page 491)

   Define Immediate Start/Stop RAN route with Integrated Recorded Announcer.

7. "LD 16 " (page 492)

   Define Delay Dial Start/Stop RAN route with Integrated Recorded Announcer.

8. "LD 14" (page 493)

   Define a RAN trunk.

The following scenario provides details on how to configure RAN Broadcasting and Non Broadcasting using different applications such as Automatic Call Distribution (ACD) queues and intercept treatments.

Copyright © 1994–2007, Nortel Networks
Nortel Networks Confidential

Assume the following scenario exists. You have a system configured with non-broadcasting RAN. Your system has 3 RAN routes. Route 1 has 1 trunk with low usage and handles RAN intercept treatments. Route 2 has 8 trunks with variable usage and handles Recorded Overflow Announcement (ROA). Route 3 has 16 trunks with high usage and handles all Automatic Call Distribution (ACD) greetings into your call centre.

Table 45 "Non-Broadcasting Scenario" (page 485) and Table 46 "Broadcasting Scenario" (page 485) provide a non-broadcasting and a broadcasting scenario respectively.

Table 45
Non-Broadcasting Scenario

RAN Routes	Usage	RAN Mode	Number of Trunks	RAN Machine Type
1	Low	Start/Stop	1	Cook 201/QAY1.
2	Varied	Continuous	8	Audichron/Cook 211 (required for XUT trunks)
3	High	Continuous	16	Audichron/Cook 211 (required for XUT trunks)

In the non-broadcasting scenario the following system requirements exist:

- a total of 25 (1 + 8 + 16) RAN trunks
- a total of 3 RAN channels

When using the RAN Broadcast feature in the same scenario, RAN trunks and RAN channels requirements are reduced. With this feature, each group of RAN trunks is replaced by one broadcast RAN trunk with maximum number of connections set to the number of cross connected trunks. RAN Broadcast allows a maximum of 48 connections per RAN trunk.

Table 46
Broadcasting Scenario

RAN Routes	Usage	RAN Mode	Number of Trunks	RAN Machine Type	Broadcast Connection/ Trunk
1	Low	Start/Stop	1	Cook 201/ QAY1	non broadcast

Copyright © 1994–2007, Nortel Networks
Nortel Networks Confidential

RAN Routes	Usage	RAN Mode	Number of Trunks	RAN Machine Type	Broadcast Connection/ Trunk
2	Varied	Continuous	1	Audichron/ Cook 211 (required for XUT trunks)	8 connections
3	High	Continuous	1	Audichron/ Cook 211 (required for XUT trunks)	16 connections

In the broadcasting scenario, the following system requirements exist:

- a total of 3 (1+1+1) RAN trunks
- a total of 3 RAN channels
- a total of 2 RAN Broadcast Route License limits
- a total of 24 (8 + 16) RAN Connections License limits

The broadcasting scenario can be further enhanced if RAN routes 2 and 3 used a Delay Dial Start/Stop RAN trunk with the Number of Calls Waiting Threshold and Waiting Time Threshold configured.

LD 16

Prompt	Response	Description
REQ	NEW CHG	Add new data. Change existing data.
TYPE	RDB	Route Data Block.
CUST	xx	Customer number, as defined in LD 15
ROUT		Route number
	0-511	Range for Large System and CS 1000E system.
	0-127	Range for Small System and Media Gateway 1000B.
TKTP	RAN	Recorded Announcement trunk type.
RTYP		Recording devices for RAN trunks where:
	AUD	Audichron/Cook 211 (required for XUT trunks).
	CON	NT7M Digital Recorders.
	DGT	213300 and 213400 Digital Recorders.
	MCON	Continuous mode Multichannel.
REP	1-15	Number of repetitions of recorded announcements.

Copyright © 1994–2007, Nortel Networks
Nortel Networks Confidential

Prompt	Response	Description
POST		RAN Post announcement treatment where:
	ATT	Route to attendant after maximum repetitions
	DIS	Disconnect after maximum repetitions.
STRT		Start arrangement where:
	IMM	Immediately connect call to recording.
	DDL	Delay call connection until start of recording.
WAIT	RGB	Provide ringback for call queuing for RAN trunk (default). MUS = Provide music for calls queuing for RAN trunk.
- MRT		Music route for RAN queuing.
	0-511	For Large Systems
	0-127	For Small Systems MRT is only prompted for RAN route with WAIT = MUS.
BDCT	YES	Allow RAN broadcast for this route. NO = Deny RAN broadcast for this route (default), except for CS 1000E, where the default is YES.
ASUP	(NO)	Do not return answer supervision (default). YES = Return answer supervision. CO = Return answer supervision only if originator is a Central Office trunk.
ACOD	x...x	Access Code for the trunk route. The Access Code must not conflict with the numbering plan. ACOD can be four digits, or seven digits with DNXP package 150 equipped.

LD 16

Prompt	Response	Description
REQ	NEW	Add new data.
	CHG	Change existing data.
TYPE	RDB	Route Data Block.
CUST	xx	Customer number, as defined in LD 15
ROUT		Route number
	0-511	Range for Large System and CS 1000E system.
	0-127	Range for Small System and Media Gateway 1000B.
TKTP	RAN	Recorded Announcement trunk type.
RTYP		Recording devices for RAN trunks where:
	CAP	Code-A Phone.
	CKM	Cook 201 multichannel.
	PUL	Pulse start/stop (Enhanced Universal Trunk cards).
	LVL	Level start/stop (Enhanced Universal Trunk cards).
	MPUL	Pulse start/stop multichannel.
	MLVL	Level start/stop multichannel.

Copyright © 1994–2007, Nortel Networks
Nortel Networks Confidential

Prompt	Response	Description
REP	1-15	Repetitions of recorded announcements.
POST	aaa	RAN Post announcement treatment where: ATT = Route to attendant after maximum repetitions DIS = Disconnect after maximum repetitions.
STRT	IMM	Immediately connect call to recording.
WAIT	RGB	Provide ringback for call queuing for RAN trunk (default). MUS = Provide music for calls queuing for RAN trunk.
- MRT	0-511 0-127	Music route for RAN queuing. For Large Systems For Small Systems MRT is only prompted for RAN route with WAIT = MUS.
BDCT	YES	Allow RAN broadcast for this route. NO = Deny RAN broadcast for this route (default), except for CS 1000E, where the default is YES.
ASUP	(NO)	Do not return answer supervision (default). YES = Return answer supervision. CO = Return answer supervision only if originator is a Central Office trunk.
ACOD	x...x	Access Code for the trunk route. The Access Code must not conflict with the numbering plan. ACOD can be four digits, or seven digits with DNXP package 150 equipped.

LD 16

Prompt	Response	Description
REQ	NEW CHG	Add new data. Change existing data.
TYPE	RDB	Route Data Block.
CUST	xx	Customer number, as defined in LD 15
ROUT		Route number
	0-511	Range for Large System and CS 1000E system.
	0-127	Range for Small System and Media Gateway 1000B.
TKTP	RAN	Recorded Announcement trunk type.
RTYP		Recording devices for RAN trunks where:
	CAP	Code-A Phone.
	CK2	Cook 201/QAY1.
	CKM	Cook 201 Multichannel.
	PUL	Pulse start/stop (Enhanced Universal Trunk cards).
	LVL	Level start/stop (Enhanced Universal Trunk cards).
	MPUL	Pulse start/stop multichannel.
	MLVL	Level start/stop multichannel.

Copyright © 1994–2007, Nortel Networks
Nortel Networks Confidential

Prompt	Response	Description
REP	1-15	Repetitions of recorded announcements.
POST	aaa	RAN Post announcement treatment where: ATT = Route to attendant after maximum repetitions DIS = Disconnect after maximum repetitions.
STRT	DDL	Delay call connection until start of recording.
WAIT	(RGB)	Provide ringback for call queuing for RAN trunk (default). MUS = Provide music for calls queuing for RAN trunk.
- MRT	0-511 0-127	Music route for RAN queuing For Large Systems For Small Systems MRT is only prompted for RAN route with WAIT = MUS.
BDCT	YES	Allow RAN broadcast for this route. NO = Deny RAN broadcast for this route (default), except for CS 1000E, where the default is YES.
- TITH	(0)-300	Waiting Threshold in seconds. Default value of zero means no threshold applies.
- NCTH	(0)-100	Number of Calls Waiting Threshold. Default value of zero means no threshold applies.
ASUP	(NO)	Do not return answer supervision (default). YES = Return answer supervision. CO = Return answer supervision only if originator is a Central Office trunk.
ACOD	x...x	Access Code for the trunk route. The Access Code must not conflict with the numbering plan. ACOD can be four digits, or seven digits with DNXP package 150 equipped.

LD 14

Prompt	Response	Description
REQ	NEW CHG	New, or change.
TYPE	RAN	Recorded Announcement trunk data block.
TN		Terminal number
	l s c u	Format for Large System and CS 1000E system, where l = loop, s = shelf, c = card, u = unit.
	c u	Format for Small System and Media Gateway 1000B where c = card and u = unit.
...		
XTRK	a...a	Extended Trunk. To specify hardware, according to the RAN mode defined in LD 16, see Table 42 "RAN modes and Hardware" (page 474).

Copyright © 1994–2007, Nortel Networks
Nortel Networks Confidential

Prompt	Response	Description
RTMB		Route number and Member Number
	0-511 1-4000	Range for Large System and CS 1000E system.
	0-127 1-4000	Range for Small System and Media Gateway 1000B.
- CONN	(4)-48	Define the maximum number of broadcast connections allowed for this trunk. *CONN is only prompted for associated RAN route with broadcasting allowed (BDCT=YES in LD 16).*

The following feature implementation is applicable to customers using the Integrated Recorded Announcer card.

LD 16

Prompt	Response	Description
REQ	NEW CHG	New, or change.
TYPE	RDB	Route Data Block.
CUST	xx	Customer number, as defined in LD 15
ROUT		Route number
	0-511	Range for Large System and CS 1000E system.
	0-127	Range for Small System and Media Gateway 1000B.
TKTP	RAN	Recorded Announcement trunk type.
RTYP	MCON	Continuous Multi-channel.
- LGTH	4-(60)-7200	Maximum message length in seconds. This is only prompted for the continuous mode multichannel, the level start/stop multichannel and the pulse start/stop multichannel.
- GRD	(IDLE)	Ground signal from RAN indicates that machine is idle (default). PLAY = Ground signal from RAN indicates that machine is playing.
REP	1-15	Repetitions of recorded announcements.
POST	aaa	RAN Post announcement treatment where: ATT = Route to attendant after maximum repetitions DIS = Disconnect after maximum repetitions.
STRT	aaa	Start arrangement where: IMM = Immediately connect call to recording. DDL = Delay call connection until start of recording.
WAIT	(RGB)	Provide ringback for call queuing for RAN trunk (default). MUS = Provide music for calls queuing for RAN trunk.

Copyright © 1994–2007, Nortel Networks
Nortel Networks Confidential

Prompt	Response	Description
- MRT	0-511 0-127	Music route for RAN queuing For Large Systems For Small Systems MRT is only prompted for RAN route with WAIT = MUS.
BDCT	YES	Allow RAN broadcast for this route. NO = Deny RAN broadcast for this route (default), except for CS 1000E, where the default is YES.
ASUP	(NO)	Do not return answer supervision (default). YES = Return answer supervision. CO = Return answer supervision only if originator is a Central Office trunk.
ACOD	x...x	Access Code for the trunk route. The Access Code must not conflict with the numbering plan. ACOD can be four digits, or seven digits with DNXP package 150 equipped.

LD 16

Prompt	Response	Description
REQ	NEW CHG	Add new data. Change existing data.
TYPE	RDB	Route Data Block.
CUST	xx	Customer number, as defined in LD 15
ROUT		Route number
	0-511	Range for Large System and CS 1000E system.
	0-127	Range for Small System and Media Gateway 1000B.
TKTP	RAN	Recorded Announcement trunk type.
RTYP	MLVL	Level start/stop multichannel recording devices for RAN trunks.
- LGTH	4-(60)-7200	Maximum message length in seconds. This is only prompted for the continuous mode multichannel, the level start/stop multichannel and the pulse start/stop multichannel.
- GRD	(IDLE)	Ground signal from RAN indicates that machine is idle (default). PLAY = Ground signal from RAN indicates that machine is playing.
REP	1-15	Repetitions of recorded announcements.
POST	aaa	Post RAN treatment where: ATT = Route to attendant after maximum repetitions DIS = Disconnect after maximum repetitions.

Copyright © 1994–2007, Nortel Networks
Nortel Networks Confidential

Prompt	Response	Description
STRT	IMM	Immediately connect call to recording.
WAIT	(RGB)	Provide ringback for call queuing for RAN trunk (default). MUS = Provide music for calls queuing for RAN trunk.
- MRT	 0-511 0 -127	Music route for RAN queuing For Large Systems For Small Systems MRT is only prompted for RAN route with WAIT = MUS.
BDCT	YES	Allow RAN broadcast for this route. NO = Deny RAN broadcast for this route (default), except for CS 1000E, where the default is YES.
ASUP	(NO)	Do not return answer supervision (default). YES = Return answer supervision. CO = Return answer supervision only if originator is a Central Office trunk.
ACOD	x...x	Access Code for the trunk route. The Access Code must not conflict with the numbering plan. ACOD can be four digits, or seven digits with DNXP package 150 equipped.

LD 16

Prompt	Response	Description
REQ	NEW CHG	Add new data. Change existing data.
TYPE	RDB	Route Data Block.
CUST	xx	Customer number, as defined in LD 15
ROUT		Route number
	0-511	Range for Large System and CS 1000E system.
	0-127	Range for Small System and Media Gateway 1000B.
TKTP	RAN	Recorded Announcement trunk type.
RTYP	MLVL	Level start/stop multichannel recording devices for RAN trunks.
- LGTH	4-(60)-7200	Maximum message length in seconds. This is only prompted for the continuous mode multichannel, the level start/stop multichannel and the pulse start/stop multichannel.
- GRD	(IDLE)	Ground signal from RAN indicates that machine is idle (default). PLAY = Ground signal from RAN indicates that machine is playing.

Copyright © 1994–2007, Nortel Networks
Nortel Networks Confidential

Prompt	Response	Description
REP	1-15	Repetitions of recorded announcements.
POST	aaa	RAN Post announcement treatment where: ATT = Route to attendant after maximum repetitions DIS = Disconnect after maximum repetitions.
STRT	DDL	Delay call connection until start of recording.
WAIT	(RGB)	Provide ringback for call queuing for RAN trunk (default). MUS = Provide music for calls queuing for RAN trunk.
- MRT	0-511 0-127	Music route for RAN queuing For Large Systems For Small Systems MRT is only prompted for RAN route with WAIT = MUS.
BDCT	YES	Allow RAN broadcast for this route. NO = Deny RAN broadcast for this route (default), except for CS 1000E, where the default is YES.
- TITH	(0)-300	Waiting Time Threshold in seconds. The default value of (0) means no threshold applies. TITH is only prompted when BDCT = YES and STRT = DDL.
- NCTH	(0)-100	Number of Calls Waiting Threshold. Default value of zero means no threshold applies. NCTH is only prompted when BDCT = YES and STRT = DDL.
ASUP	(NO)	Do not return answer supervision (default). YES = Return answer supervision. CO = Return answer supervision only if originator is a Central Office trunk.
ACOD	x...x	Access Code for the trunk route. The Access Code must not conflict with the numbering plan. ACOD can be four digits, or seven digits with DNXP package 150 equipped.

LD 14

Prompt	Response	Description
REQ	NEW CHG	Add new data. Change existing data.
TYPE	RAN	Recorded Announcement trunk data block.
TN		Terminal number

Copyright © 1994–2007, Nortel Networks
Nortel Networks Confidential

Prompt	Response	Description
	l s c u	Format for Large System and CS 1000E system, where l = loop, s = shelf, c = card, u = unit.
	c u	Format for Small System and Media Gateway 1000B where c = card and u = unit.
XTRK	EXUT	Enhanced Extended Universal Trunk card. To use the new Integrated Recorded Announcer card, the XTRK prompt must be set to EXUT.
...		
RTMB		Route number and Member Number
	0-511 1-4000	Range for Large System and CS 1000E system.
	0-127 1-4000	Range for Small System and Media Gateway 1000B.
- CONN	(4)-48	Maximum number of broadcast connections allowed for this trunk. CONN is only prompted for associated RAN route with broadcasting allowed (BDCT=YES in LD 16). The CONN prompt defines the maximum number of broadcast connections allowed for a RAN trunk at any given time. As an example, if sixteen is configured, then the physical broadcasting trunk may broadcast up to sixteen callers at one time.

Feature operation

No specific operating procedures are required to use this feature.

Copyright © 1994–2007, Nortel Networks
Nortel Networks Confidential

Recorded Overflow Announcement

Contents

This section contains information on the following topics:

"Feature description" (page 495)

"Operating parameters" (page 495)

"Feature interactions" (page 497)

"Feature packaging" (page 497)

"Feature implementation" (page 497)

"Feature operation" (page 499)

Feature description

Recorded Overflow Announcement (ROA) allows delayed calls to the attendant to be connected to a recorded announcement notifying the calling party of the delay. A second recorded message can also be provided to the calling party repeatedly until an attendant answers the call.

A call that is waiting in the queue receives the first recorded message after the expiration of a timer (T1). After the message is given, the call returns to the attendant queue. While the call is in the waiting state, it can be connected either to Music (MUS), Ringback tone (RGB), or Silence (SIL).

If a second recorded announcement is specified, the call receives the message upon expiration of a second timer (T2). After the second message is given, the call is placed in the attendant queue again. There is no limit to the number of times a call can be given the second recorded message.

Operating parameters

Recorded Overflow Announcement (ROA) treatment is provided to call types assigned to Incoming Call Indicator (ICI) keys on the attendant console.

Copyright © 1994–2007, Nortel Networks
Nortel Networks Confidential

A maximum of 20 ICI keys can be assigned to receive Recorded Overflow Announcement (ROA) treatment.

The delay time thresholds for the first and second recorded announcements (T1 and T2) are assigned in LD 15. The thresholds shown in Table 47 "Delay time thresholds" (page 496) can be defined for these timers.

Table 47
Delay time thresholds

	Thresholds		
	Minimum	**Default**	**Maximum**
T1	0 seconds	20 seconds	2,044 seconds
T2	2 seconds	40 seconds	2,044 seconds

Loop start trunks do not provide disconnect supervision and are not recommended for use with the ROA feature. A call on a loop start trunk that is abandoned after the recorded message is given must be manually cleared by the attendant.

ROA is not provided on release link trunks from Centralized Attendant Service (CAS) remote locations.

When the CAS feature is activated at a remote circuit switched network, the ROA feature is inactive at the remote site.

If music is required, the Music (MUS) package 44 must be equipped. Music can be provided after the first and second Recorded Announcement (RAN). A customer provided music source is required, connected through a Music trunk. Music is provided to delayed calls through a conference circuit pack in a listen-only mode. The music source provided by the customer must be compatible with the RAN trunk card.

Private Lines are not eligible for ROA.

ROA is not provided for any type of transferred call. A recalled call from Meridian Mail, an analog (500/2500-type) telephone, or a proprietary telephone, will not be eligible for ROA treatment.

ROA is only provided for call types assigned to Incoming Call Indicator (ICI) keys. The following call types are eligible, if related ICI keys are assigned:

- Trunk routes
- LDN 0 through LDN 3
- Dial 0
- Dial 0 Fully Restricted
- Intercept Treatment (INTR)
- Call Forward Busy

Copyright © 1994–2007, Nortel Networks
Nortel Networks Confidential

- Call Forward No Answer
- Message Waiting (MW)
- Lockout, and
- Station Category Indication (SCI).

Feature interactions

Automatic Call Distribution (ACD)

The RAN route used for ROA can be the same route that is used for ACD and Intercept Treatment.

Call Transfer

ROA is not provided for any type of transferred call.

Night Service

The ROA feature is inactive when the system is in Night Service.

Feature packaging

Recorded Overflow Announcement (ROA) package 36 requires Recorded Announcement (RAN) package 7.

Feature implementation

Task summary list

The following is a summary of the tasks in this section:

1. "LD 16" (page 497)

   - Enable Recorded Announcement (RAN) trunk route.

2. "LD 14" (page 498)

   Enable Recorded Announcement (RAN) trunk.

3. "LD 15" (page 499)

   Configure Recorded Announcement (RAN) in the customer data block.

LD 16

Prompt	Response	Description
REQ	NEW, CHG	Add, or change.
TYPE	RDB	Route Data Block.
CUST	xx	Customer number, as defined in LD 15
....	....	
ROUT		Route number
All RAN route members must be removed before the route can be removed.		

Copyright © 1994–2007, Nortel Networks
Nortel Networks Confidential

Prompt	Response	Description
	0-511	Range for Large System and CS 1000E system.
	0-127	Range for Small System and Media Gateway 1000B.
....	....	
TKTP	RAN	RAN trunks.
RTYP	CAP	Code-a-Phone recording device. Software allows announcements of up 608 seconds.
	AUD	Audichron recording device (required when connecting to a Universal Trunk Card). Software allows announcements of up to 64 seconds.
	CK2	Cook Electric recording device. Software allows announcements of up to 64 seconds.
	DGT	Digital Recorders 213300 & 213400. Software allows announcements of up to 256 seconds.
	CON	NT7M series digital recorders. Software allows announcements of up to 608 seconds.
....	....	
REP	1-15	Number of times the announcement repeats during each connection.
POST	ATT	Call is routed to attendant after specified number of repetitions (applies to Direct Inward Dial [DID] calls on Intercept).
	DIS	RAN is removed after a specified number of repetitions (call is kept in Automatic Call Distribution queue).
STRT	IMM	Call connects immediately to announcement.
	DDL	Call connects to announcement at the start of announcement.
....	....	
ASUP	YES	Return Answer Supervision by RAN to originator. ASUP=NO (Default)
		ASUP must be set to YES to allow the following options in LD 15 (at the WAIT prompt): Caller hears Ringback (RGB), Music (MUS), or Silence (SIL) while waiting.
ACOD	xxx...x	Trunk route access code.
....	....	
All RAN route members must be removed before the route can be removed.		

LD 14

Prompt	Response	Description
REQ	NEW CHG	Add, or change.
TYPE	RAN	RAN trunk data block.

Copyright © 1994–2007, Nortel Networks
Nortel Networks Confidential

Prompt	Response	Description
TN		Terminal number
	l s c u	Format for Large System and CS 1000E system, where l = loop, s = shelf, c = card, u = unit.
	c u	Format for Small System and Media Gateway 1000B where c = card and u = unit.
CUST	xx	Customer number, as defined in LD 15
RTMB		Route number and Member Number
	0-511 1-4000	Range for Large System and CS 1000E system.
	0-127 1-4000	Range for Small System and Media Gateway 1000B.

LD 15

Prompt	Response	Description
REQ	CHG	Change.
TYPE	ROA	Recorded Overflow Announcement options
CUST		Customer number
	0-99	Range for Large System and CS 1000E system.
	0-31	Range for Small System and Media Gateway 1000B.
OPT	(ROX), ROI	Recorded Overflow (excluded) included.
- FRRT	xxx	Route number for the first recorded announcement.
- FRT	0-(20)-2044	Time in seconds before the first announcement plays.
- SRRT	xxx	Route number for the second recorded announcement.
- SRT	2-(40)-2044	Time in seconds before second announcement plays.
- WAIT	RGB, MUS, SIL	Caller hears Ringback (RGB), Music (MUS), or Silence (SIL) while waiting.
- - MURT	xxx	Route Number for Music route if WAIT = MUS.
- RICI	xx . .xx . .xx	Incoming Call Indicator (ICI) key numbers eligible for ROA.

Feature operation

No specific operating procedures are required to use this feature.

Copyright © 1994–2007, Nortel Networks
Nortel Networks Confidential

Copyright © 1994–2007, Nortel Networks
Nortel Networks Confidential

Recorded Telephone Dictation

Contents

This section contains information on the following topics:

"Feature description" (page 501)

"Operating parameters" (page 501)

"Feature interactions" (page 501)

"Feature packaging" (page 502)

"Feature implementation" (page 502)

"Feature operation" (page 503)

Feature description

This feature provides dial access to customer-supplied dictation equipment. Operation of the equipment can be either voice or dial controlled. The actual controls vary with the type of dictation equipment used.

To access the dictation equipment, the user dials the access code assigned to the dictation route. Access to the route is controlled by Trunk Group Access Restrictions (TGARs).

Operating parameters

There are no operating parameters associated with this feature.

Feature interactions

Multi-Party Operations

Users of analog (500/2500-type) telephones cannot make a consultation call while connected to a dictation trunk.

Conference

Recorded Telephone Dictation trunks cannot be used in a conference call.

Copyright © 1994–2007, Nortel Networks
Nortel Networks Confidential

Feature packaging

This feature is included in base system software.

Feature implementation

Task summary list

The following is a summary of the tasks in this section:

1. "LD 16" (page 502)

   Enable a trunk route for the Recorded Telephone Dictation feature.

2. "LD 14" (page 502)

   Enable a trunk for the Recorded Telephone Dictation feature.

LD 16

Prompt	Response	Description
REQ	CHG	Change.
TYPE	RDB	Route Data Block.
CUST	xx	Customer number, as defined in LD 15
ROUT		Route number
	0-511	Range for Large System and CS 1000E system.
	0-127	Range for Small System and Media Gateway 1000B.
TKTP	DIC	Recorded Telephone Dictation trunk route.
ICOG	OGT	Outgoing trunk route.
ACOD	xxx...x	Directory Number (DN) to dial to access the dictation device.

LD 14

Prompt	Response	Description
REQ	CHG	Change.
TYPE	RDB	Route Data Block.
TN		Terminal number
	l s c u	Format for Large System and CS 1000E system, where l = loop, s = shelf, c = card, u = unit.
	c u	Format for Small System and Media Gateway 1000B where c = card and u = unit.
CUST	xx	Customer number, as defined in LD 15
RTMB		Route number and Member Number
	0-511 1-4000	Range for Large System and CS 1000E system.
	0-127 1-4000	Range for Small System and Media Gateway 1000B.
SIGL	aaa	Trunk signaling.

Copyright © 1994–2007, Nortel Networks
Nortel Networks Confidential

Prompt	Response	Description
STRO	aaa	Outgoing start arrangement.
SUPN	(NO) YES	Answer and disconnect supervision (not) required.

Feature operation

No specific operating procedures are required to use this feature.

Copyright © 1994–2007, Nortel Networks
Nortel Networks Confidential

Copyright © 1994–2007, Nortel Networks
Nortel Networks Confidential

Recovery on Misoperation of Attendant Console

Contents

This section contains information on the following topics:

"Feature description" (page 505)

"Operating parameters" (page 505)

"Feature interactions" (page 505)

"Feature packaging" (page 506)

"Feature implementation" (page 506)

"Feature operation" (page 507)

Feature description

The Recovery of Misoperation on the Attendant Console feature provides a safeguard in the system software that prevents calls from being inadvertently disconnected.

Operating parameters

For Centralized Attendant Service, misoperation of the attendant console at the main node cannot be prevented.

Feature interactions

Call Forward All Calls, Call Forward Busy, Call Forward by Call Type, Call Forward External Deny, Call Forward, Internal Calls, Call Forward No Answer, Call Forward No Answer Second Level, Hunting

These features take precedence over the Recovery of Misoperation feature.

Copyright © 1994–2007, Nortel Networks
Nortel Networks Confidential

Electronic Switched Network

If the attendant dials an incomplete Electronic Switched Network (ESN) number as a destination, pressing the Release key or another loop key is ignored. The attendant can dial more digits as long as the interdigit timer has not timed out. To dial to another number, the attendant must first press the Release Destination key to release the destination.

Music on Hold

Music on Hold, if allowed, is applied to calls put on hold due to the Autohold on the loop key option.

Recorded Announcement

If a recorded announcement is given to the destination side that has been intercepted, the connection to the destination side is considered as invalid. Therefore, if the attendant tries to extend the source to the destination using the Release key or another loop key, the operation is ignored. The attendant must first press the Release Destination key to release the destination, and then extend the call to the source. If the Hold key is pressed, the source party is put on hold and the recorded announcement is disconnected on the destination side.

Through Dialing

If an attendant dials a trunk access code and then presses the Release key or another loop key, the station on the source side and the trunk on the destination side are connected and released from the console. The source can then dial the remaining digits to access an outside destination. The Hold key is ignored.

Feature packaging

This feature is included in base system software.

Feature implementation

LD 15 - Activate Recovery on Misoperation of Attendant Console.

Prompt	Response	Description
REQ:	CHG	Change.
TYPE:	FTR	Features and options
CUST		Customer number
	0-99	Range for Large System and CS 1000E system.
	0-31	Range for Small System and Media Gateway 1000B.
OPT	(AHD) AHA	Autohold on loop Key (denied) allowed.
	(REA) RED	Release on Exclusion (allowed) denied.

Copyright © 1994–2007, Nortel Networks
Nortel Networks Confidential

Feature operation

This section describes how the feature works in each of the following cases:

- Misoperation of Release key and loop keys
- Misoperation of Autohold on loop key
- Misoperation of Release Source key and Release Destination key.

Misoperation of Release key and loop keys

In the following cases, pressing the Release key or the loop key is ignored:

- Extending a call to a vacant number
- Extending a call to restricted station or trunk
- Extending to a station restricted by Trunk Barring

Intercept treatment is returned for the above conditions.

- Extending to a partially-dialed number
- Extending a network-blocked call
- Extending a station in the Do Not Disturb mode
- Extending to a station in the Make Set Busy mode
- Extending to a station in the Maintenance-busy state
- Extending to a station in the Line Lockout state
- Extending to a busy extension without Camp-on or Call Waiting
- Extending to a station restricted by Trunk-to-Trunk Connection Restriction
- Releasing from a conference connection – The attendant is prevented from releasing a conference connection, established on the source side, by pressing the Release key or a loop key in the following cases:
  - — if there is no destination. Pressing either the Release key or a loop key places the active loop on hold rather than releasing it. The conference can be released by pressing the Release Source key.
  - — if the attempt to extend the call to the destination was not successful. The conference can be released by pressing the Release Destination key.
  - — if there is another party already connected as a destination. Pressing the Hold key, Release key or another loop key puts the active loop on hold, rather than releasing it. The destination side can be released by pressing the Release Destination key. The source side can be released by pressing the Release Source key. If an established conference connection cannot be released due to Trunk-to-Trunk Connection Restriction, pressing the Release Source

Copyright © 1994–2007, Nortel Networks
Nortel Networks Confidential

key causes the conference to be released from the console and the trunks disconnected.

Busy tone or overflow tone is returned for the above conditions.

Misoperation of Autohold on the loop key

On a console that is equipped with the Autohold on loop key option, if the attendant is on a call that has terminated properly and presses the loop key while switching to another call, the active loop is placed on hold rather than being released. Besides preventing the inadvertent release of the caller, this option allows the attendant to toggle between any number of held calls by having to press only one key. If the attendant is on a call that cannot be terminated properly, pressing another loop key releases the destination side and puts the source side on hold.

In the following cases, pressing the Release key or the loop key places the call on hold rather than releasing it.

- Extending to a busy extension without Camp-on or Call Waiting, or
- Extending to a station restricted by Trunk-to-Trunk Connection Restriction.

Misoperation of the Release Source/Release Destination key

This option allows the system to ignore the pressing of the Release Source or Release Destination key, preventing the release of either the excluded source or destination party, or a conference call connection. The source or destination party involved in a talking connection with the attendant may still be released by pressing the Release Source or Release Destination key, as appropriate. In a lockout situation, where both source and destination parties are excluded, the attendant may use either the Release Source or Release Destination key to disconnect both parties, since the attendant is not able to re-enter the connection.

Copyright © 1994–2007, Nortel Networks
Nortel Networks Confidential

Reference Clock Switching

Contents

This section contains information on the following topics:

"Feature description" (page 509)

"Operating parameters" (page 510)

"Feature interactions" (page 510)

"Feature packaging" (page 511)

"Feature implementation" (page 511)

"Feature operation" (page 511)

Feature description

This product improvement allows a Clock Controller reference to automatically switch to another tracking reference if the reference goes into a non-acceptable state (the Clock Controller can track on its primary reference, secondary reference, or be in free run). A non-acceptable state is considered as one of the following:

- The reference loop is disabled.
- For 2.0 Mbps Primary Rate Interface (PRI2), one of the following group 2 errors is detected on the reference loop:
  - The far end is in out-of-service state
  - The far end has lost Multiframe Alignment Signal
  - Alarm Indication Signal is sent
  - Loss of Frame Alignment, and
  - Loss of Multiframe Alignment.

Copyright © 1994–2007, Nortel Networks
Nortel Networks Confidential

- For DTI2, if the reference loop is in Out-of-service (OOS) grade of service, or if the reference loop is in No New Call state, if the OOS is inhibited.

Clock references are supplied to the Clock Controller by the DTI2/PRI2 pack during tracking mode. As mentioned, the Clock Controller can track on its primary reference, secondary reference, or be in free run. If tracking on primary reference and a non-acceptable state is reached, the Clock Controller switches off primary reference and tracks on secondary reference, if it is in an acceptable state, or goes into free run. While tracking in secondary reference, the Clock Controller makes regular periodic checks, at the Clock Controller Audit Rate (CCAR), to determine whether tracking can resume on the primary reference. When the primary reference returns into acceptable state, tracking on primary reference resumes during the next Clock Controller audit.

The same processing occurs if the Clock Controller is tracking on secondary reference, and it goes into a non-acceptable state. It goes into primary reference, if in acceptable state, or free run.

When tracking in free run and an non-acceptable state is encountered, the Clock Controller will first attempt to track on primary state, if in an acceptable state, and then on secondary state. The free run tracking is controlled by a free run guard timer, which is started as soon as tracking begins in free run. As soon as this timer runs out, tracking is attempted on the primary reference and then on the secondary reference. If both are still in a non-acceptable state, tracking continues in free run and the free run guard timer is restarted. If the free run guard timer is not configured, the attempt to switch over to primary or secondary reference is made only as part of the Clock Controller check for an acceptable state on the primary and secondary references.

When the Clock Controller switches from one reference to another, a small delay occurs due to the loop status update and the switching process. During this delay, the reference is given by the Clock Controller to itself in hardware free run state.

Operating parameters

Clock Controller cards QPC775 and NTRB53, and circuit packs QPC915 and QPC536 (2.0 Mbps Digital Trunk Interface), and/or NT8D72AA (PRI2).

Feature interactions

There are no feature interactions associated with this feature.

Copyright © 1994–2007, Nortel Networks
Nortel Networks Confidential

Feature packaging

Reference Clock Switching requires the following packages:

- International Supplementary Features (SUPP) package 131
- 1.5 Mbps Digital Trunk Interface (PBXI) package 75
- one or both of 2.0 Mbps Digital Trunk Interface (DTI2) package 129 and 2.0 Mbps Primary Rate Interface (PRI2) package 154

Feature implementation

Task summary list

The following is a summary of the tasks in this section:

1. "LD 60" (page 511)

   Enable automatic switch over of system clock sources on the Clock Controller.

2. "LD 73" (page 511)

   Enable fast clock switching.

LD 60

Command	Description
...	
EREF	Enable automatic switch over of system clocks. Enable automatic switch over of primary and secondary reference clocks. Also enables recovery of primary or secondary clocks when loops associated with these clocks are automatically enabled.

LD 73

Prompt	Response	Description
...		
CCGD	0-(15)-1440	Clock Controller free run Guard time (in minutes).
CCAR	0-(15)	Clock Controller Audit Rate. The time, in minutes, between normal CC audits. Only programmable on units equipped with 2.0 Mbps DTI/PRI.
EFCS	(NO) YES	Enable Fast Clock Switching.

Feature operation

No specific operating procedures are required to use this feature.

Copyright © 1994–2007, Nortel Networks
Nortel Networks Confidential

Copyright © 1994–2007, Nortel Networks
Nortel Networks Confidential

Remote Call Forward

Contents

This section contains information on the following topics:

"Feature description" (page 513)

"Operating parameters" (page 513)

"Feature interactions" (page 514)

"Feature packaging" (page 515)

"Feature implementation" (page 516)

"Feature operation" (page 518)

Feature description

Remote Call Forward (RCFW) allows a telephone user to program Call Forward from a remote telephone. With Remote Call Forward (RCFW) enabled, forwarding DNs can be defined and Call Forward All Calls can be activated from within the system or outside the local switch. The Remote Call Forward (RCFW) feature is password protected.

The Station Control Password (SCPW) is required to program Remote Call Forward. Entering a password length of 0 disables the password control for both Electronic Lock and RCFW.

Operating parameters

RCFW requires the following:

- set the password length in LD 15, at the SCPL prompt
- add passwords in LD 10 and LD 11, at the SCPW prompt
- allow Call Forward All Calls in LD 10 and LD 11, and
- define Remote Call Forward Activate (RCFA), Deactivate (RCFD), and Verify (RCFV) Flexible Feature Codes (FFC) in LD 57.

Copyright © 1994–2007, Nortel Networks
Nortel Networks Confidential

To activate RCFW from outside of the local switch, you must use the Direct Inward System Access (DISA) DN. The telephone's Prime DN is associated with the RCFW password for added security. Also, RCFW can activate or deactivate Call Forward on a telephone, and verify the same feature on a telephone.

Changes to the Station Control Password length do not take effect until after a data dump and SYSLOAD.

If there are two telephones with the same Prime DN, it is recommended that only one of them have a Station Control Password. With RCFW, it is possible that two telephones could have the same password assigned. With the same password, they could control each other's security. For the same reason, the Secondary DN for an Automatic Call Distribution (ACD) telephone should not appear as a Prime DN on another telephone.

A unique number code must be programmed for each of the FFC functions relating to RCFW: Remote Call Forward Activate (RCFA), Remote Call Forward Deactivate (RCFD), and Remote Call Forward Verify (RCFV). You can change the RCFW Directory Number (DN) from your own telephone or from a telephone remote from the switch.

RCFW is not supported for ACD telephones.

Feature interactions

Attendant Administration

Attendant Administration does not support the telephone programming associated with Remote Call Forward.

Call Forward Destination Deactivation

Remote Call Forward (RCFW) and Call Forward Destination Deactivation (CFDD) provide the same functionality but are activated differently. CFDD does not require the call forward station's control password to deactivate the call forward functionality on the call forward station.

The call forwarded destination can use the Remote Call Forward deactivation FFC as well as CFDD to deactivate the Call Forward All Calls functionality on the call forward station.

Call Forward, Internal Calls

Remote CFW Activate (RCFA), Remote CFW Deactivate (RCFD), and Remote CFW Verify (RCFV) FFCs can be used only to access CFW All Calls; they cannot be used to access Internal Call Forward.

Copyright © 1994–2007, Nortel Networks
Nortel Networks Confidential

China - Flexible Feature Codes - Outgoing Call Barring, Enhanced Flexible Feature Codes - Outgoing Call Barring

Activation of CFW to a barred DN by Remote Call Forward will be permitted, since the user has had to dial the Station Control Password, which could also have been used to deactivate Outgoing Call Barring (OCB).

Multiple Appearance Directory Number

With a Multiple Appearance Directory Number (DN) and both sets having a Station Control Password (SCPW), Remote Call Forward may not operate as intended (that is, if Call Forward has been activated using the Remote Call Forward feature, Call Forward remains activated when an attempt to deactivate it is made from the set on which it is active).

Phantom Terminal Numbers (TNs)

If Remote Call Forward is to be used in conjunction with a Phantom TN, the Phantom TNs must be configured with the Call Forward All Calls (CFW) feature.

Preventing Reciprocal Call Forward

This modification applies to Remote Call Forward.

Set-Based Administration Enhancements

A set may be remote call forwarded while someone is actively logged into it with Set-Based Administration login.

2500 Telephone Features

When Flexible Feature Codes (FFC) package 139 is defined and active on your system, a telephone provisioned for Call Forward in LD 10 can also Call Forward All Calls from a remote internal DN.

Feature packaging

The following software packages are required to implement Remote Call Forward:

- Optional Features (OPTF) package 1
- Flexible Feature Codes (FFC) package 139, and
- Controlled Class of Service (CCOS) package 81.

In addition, the following software packages are required to implement RCFW on analog (500/2500-type) telephones:

- Special Service for 2500 (SS25) package 18, and
- 500 Set Dial Access to Features (SS5) package 73.

Copyright © 1994–2007, Nortel Networks
Nortel Networks Confidential

Feature implementation

Task summary list

The following is a summary of the tasks in this section:

1. "LD 15 " (page 516)

   Set the Station Control Password length.

2. "LD 57 " (page 517)

   Define Remote Call Forward Flexible Feature Codes.

3. "LD 10" (page 517)

   Set the Station Control Password for analog (500/2500-type) telephones and allow Call Forward.

4. "LD 11" (page 517)

   Set the Station Control Password for Meridian 1 proprietary telephones and allow Call Forward.

LD 15

Prompt	Response	Description
REQ:	CHG	Change.
TYPE:	FFC	FFC gate opener.
CUST		Customer number
	0-99	Range for Large System and CS 1000E system.
	0-31	Range for Small System and Media Gateway 1000B.
...		
- SCPL	0-8	Station control password length (0-8). Entering 0 disables the Remote Call Forward and the Electronic Lock features. A data dump and SYSLOAD are required to implement a change in password length. Shorter passwords are filled with leading zeros. Passwords that are too long have the leading digits truncated.
- FFCS	YES	Change end of dialing digits in FFC.

Copyright © 1994–2007, Nortel Networks
Nortel Networks Confidential

Prompt	Response	Description
- - STRL	1-3	Number of digits to indicate FFC end of a feature activation.
- - STRG	(#), xxx	1 to 3 digits to indicate FFC end of a feature entry.

LD 57

Prompt	Response	Description
REQ	CHG	Change.
TYPE	FFC	Flexible Feature Codes.
FFCT	(NO) YES	FFC Confirmation Tone (optional).
CODE	RCFA	Remote Call Forward Activate.
RCFA	xx	RCFA code
CODE	RCFD	Remote Call Forward Deactivate.
RCFD	xx	RCFD code.
CODE	RCFV	Remote Call Forward Verify.
RCFV	xx	RCFV code.

LD 10

Prompt	Response	Description
REQ:	CHG	Change.
TYPE:	500	Telephone type.
TN		Terminal number
	l s c u	Format for Large System and CS 1000E system, where l = loop, s = shelf, c = card, u = unit.
	c u	Format for Small System and Media Gateway 1000B where c = card and u = unit.
SCPW	xxx...x	Station control password (0-8 digits as defined by prompt SCPL in LD 15).
	X	Entering X deletes the password.
FTR	CFW 4-(16)-23	Allow Call Forward and set forwarding DN length.

LD 11

Prompt	Response	Description
REQ:	CHG	Change.
TYPE:	a...a	Telephone type. Type **?** for a list of possible responses.
TN		Terminal number
	l s c u	Format for Large System and CS 1000E system, where l = loop, s = shelf, c = card, u = unit.

Copyright © 1994–2007, Nortel Networks
Nortel Networks Confidential

Prompt	Response	Description
	c u	Format for Small System and Media Gateway 1000B where c = card and u = unit.
SCPW	xxx...x	Station control password (0-8 digits as defined by prompt SCPL in LD 15).
	X	Entering X deletes the password.
KEY	xx CFW 4-(16)-23	Assign Call Forward key (xx) and set forwarding DN length.

Feature operation

From any telephone within the system, simply lift the handset and use the following procedures. From any telephone outside the system, first dial the Direct Inward System Access (DISA) number for your system, wait for dial tone, and dial any required passwords and Authorization Codes.

Step	Action
1	Dial the Remote Call Forward Activate FFC.
2	Dial the Station Control Password for the telephone to be forwarded.
3	Dial the Prime DN of the telephone to be forwarded.
4	Dial the number to which calls will be forwarded.
5	Dial the end-of-entry digit(s) (defined in LD 15), if these digits plus the number of digits in the forwarding DN are less than 24 digits. (If you do not dial the end-of-entry digits, the forwarding DN is saved but cannot be verified remotely.)

—End—

You will hear a confirmation tone after entering the main extension number, telling you that the password and extension match. You will hear a second special tone after dialing the end-of-entry digits, telling you that the procedure was successful. If you hear a fast busy signal, hang up and try again.

When entering the forwarding DN, you cannot enter more than 23 digits, including the end-of-entry digits. If you attempt to enter a 24th digit, you will hear an overflow tone.

If the forwarding DN plus the end-of-entry digits are not less than 24 digits, hang up after dialing the forwarding DN. The DN is saved but cannot be verified remotely.

Copyright © 1994–2007, Nortel Networks
Nortel Networks Confidential

To cancel Remote Call Forward:

- Dial the Remote Call Forward Deactivate FFC.
- Dial the Station Control Password for the telephone.
- Dial the Prime DN of the telephone.

To verify Remote Call Forward:

- Dial the Remote Call Forward Verify FFC.
- Dial the Station Control Password for the telephone.
- Dial the Prime DN of the telephone.
- Dial the number to which calls should be forwarded.
- Dial the end-of-entry digit(s).

If the number to which the telephone is forwarding calls does not match your entry in step 4, you will hear a fast busy signal. If the numbers do match, you will hear a confirmation tone after entering the forwarding number, provided the confirmation tone is enabled in LD 57.

When entering the forwarding DN, you cannot enter more than 23 digits, including the end-of-entry digits. If you attempt to enter a 24th digit, you will hear an overflow tone. You cannot use Remote Call Forward Verify for a forwarding DN that was entered without the end-of-entry digits because of too many digits.

Copyright © 1994–2007, Nortel Networks
Nortel Networks Confidential

Copyright © 1994–2007, Nortel Networks
Nortel Networks Confidential

Remote Radio Paging

Contents

This section contains information on the following topics:

"Feature description" (page 521)

"Operating parameters" (page 522)

"Feature interactions" (page 523)

"Feature packaging" (page 523)

"Feature implementation" (page 523)

"Feature operation" (page 524)

Feature description

This feature provides a network-wide meet-me paging capability from a centralized location. Radio Paging can be accessed by remote nodes through a Coordinated Dialing Plan; however, the Radio Paging feature is not required at remote nodes unless post-selection Radio Paging is required. These remote nodes can define CDP steering codes that route calls to the radio paging node.

These steering codes are the equivalent of Flexible Feature Codes for Radio Paging, and are referred to as *Remote Radio Paging FFCs*. The steering codes must not be deleted by digit manipulation, since the digits are interpreted as the Radio Paging FFC at the Radio Paging node.

Figure 14 "A typical Remote Radio Paging configuration" (page 522) demonstrates a possible Remote Radio Paging configuration.

Copyright © 1994–2007, Nortel Networks
Nortel Networks Confidential

Figure 14
A typical Remote Radio Paging configuration

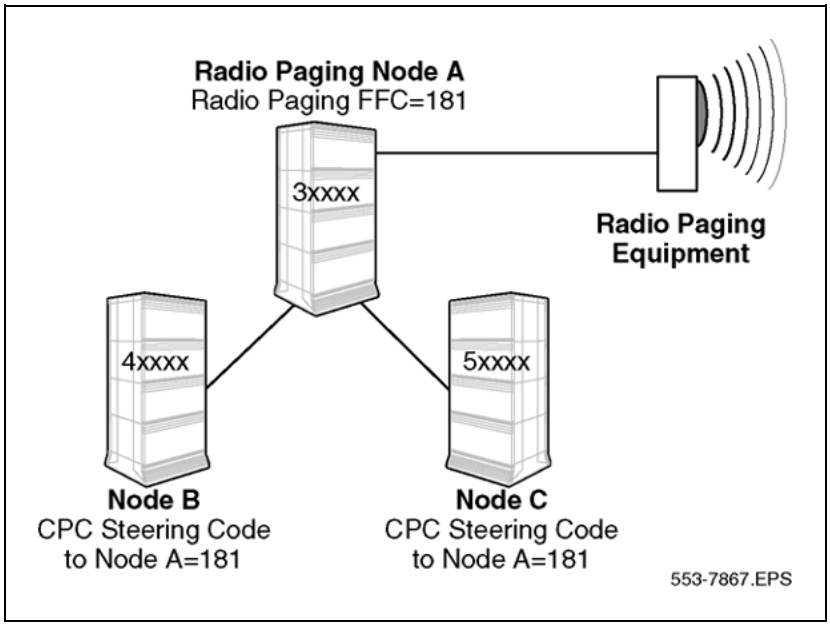

Node A, which is equipped with the Remote Radio Paging feature, is referred to as the Radio Paging node. The Radio Paging FFC is defined as 181. At remote nodes B and C, steering codes of 181 have been defined to route calls to node A. To access Radio Paging from nodes B and C, a caller simply has to dial 181.

Post Selection Access to Remote Radio Paging

This feature allows the post selection operation of Radio Paging from all nodes in the network. For this functionality, all nodes must be equipped with the Remote Radio Paging feature. For post-selection access, Trunk Steering Codes (TSCs) and Distant Steering Codes (DSCs) are defined as Remote Radio Paging FFCs.

If a post-selection access is made to a set on the same node, the originally-called set must be either ringing or busy. If the originally-dialed set is on another node, it must be on an established call. In this latter case, the established call is disconnected before being routed to the radio paging node.

Post-selection access can be performed from 500/2500-type sets, Meridian 1000 series sets, Meridian proprietary sets, and attendant consoles.

Operating parameters

All DNs in the network must have the same fixed length.

The * and # symbols cannot be used as part of the Radio Paging FFC.

Copyright © 1994–2007, Nortel Networks
Nortel Networks Confidential

Post Selection Access cannot be done using the single-digit access method.

Feature interactions

There are no feature interactions associated with this feature.

Feature packaging

Controlled Class of Service (CCOS) package 81; Flexible Feature Codes (FFC) package 139; and Radio Paging (RPA) package 187.

Feature implementation

Task summary list

The following is a summary of the tasks in this section:

1. "LD 87" (page 523)

   Create the Coordinated Dialing Plan TSCs and DSCs for remote nodes.

2. "LD 11" (page 524)

   Assign the TSC or DSC steering code to the Radio Paging key on Meridian 1 proprietary telephones.

3. "LD 12 " (page 524)

   Assign the TSC or DSC steering code to the Radio Paging key on attendant consoles.

LD 87

Prompt	Response	Description
...		
DSC	xxxx	Distant Steering Code. Respond with a four-digit value. The DSC must be identical to the Radio Paging FFC at the radio paging node.
- RRPA	(NO) YES	(Disable) enable Remote Radio Paging Access. Remote Radio Paging FFC is being used. Prompted if a CDP, TSC, or DSC is being changed.
TSC	xxxx	Trunk Steering code.

Copyright © 1994–2007, Nortel Networks
Nortel Networks Confidential

Prompt	Response	Description
		Respond with a four-digit value. The TSC must be identical to the Radio Paging FFC at the radio paging node.

LD 11

Prompt	Response	Description
...		
KEY	xx RPAG yyyy	Key number, Radio Paging, Route Access Code.

LD 12

Prompt	Response	Description
...		
KEY	xx RPAG yyyy	Key number, Radio Paging, Route Access Code.

Feature operation

No specific operating procedures are required to use this feature.

Copyright © 1994–2007, Nortel Networks
Nortel Networks Confidential

Restricted Call Transfer

Contents

This section contains information on the following topics:

"Feature description" (page 525)

"Operating parameters" (page 525)

"Feature interactions" (page 525)

"Feature packaging" (page 525)

"Feature implementation" (page 526)

"Feature operation" (page 526)

Feature description

This feature provides the Call Transfer Restricted (XFR) Class of Service for analog (500/2500-type) telephones. By assigning XFR Class of Service in LD 10, a Call Transfer attempt will not result in action. This is different from the Call Transfer Denied (XFD) Class of Service, which will route the call to the attendant when a transfer is attempted.

Operating parameters

The Three-party Service Allowed Class of Service, part of the Multiple-Party Operation feature, cannot be used together with the XFR Class of Service.

Feature interactions

There are no feature interactions associated with this feature.

Feature packaging

This feature is included in base system software.

Copyright © 1994–2007, Nortel Networks
Nortel Networks Confidential

Feature implementation

LD 10 - Enable Restricted Call Transfer for an analog (500/2500-type) telephone.

Prompt	Response	Description
...		
CLS	XFR	Restrict call transfers and do not recall to attendant.

Feature operation

With XFR Class of Service assigned, a Call Transfer request will not result in action.

Copyright © 1994–2007, Nortel Networks
Nortel Networks Confidential

Restricted Direct Inward Dialing Class of Service

Contents

This section contains information on the following topics:

"Feature description" (page 527)

"Operating parameters" (page 527)

"Feature interactions" (page 528)

"Feature packaging" (page 528)

"Feature implementation" (page 528)

"Feature operation" (page 528)

Feature description

In order to restrict certain stations from receiving Direct Inward Dialing (DID) calls, the feature will either restrict DID (RDI) calls or unrestricted DID (UDI) calls. The RDI stations will fully restrict DID calls and whereas non-DID calls will be treated according to their normal Class of Service.

Operating parameters

The Central Office must be equipped to handle the special signaling requirements associated with the Restricted DID Class of Service feature described above.

The Restricted DID Class of Service feature is not available on 1.5 Mbps digital trunks or Japanese Digital Multiplex Interface (DMI) trunks.

Attendant Administration of the Restricted DID Class of Service is not available.

Copyright © 1994–2007, Nortel Networks
Nortel Networks Confidential

Feature interactions

Class of Service Restrictions

The Restricted DID Class of Service feature changes the access restrictions for telephone sets which have the feature enabled. These sets are treated as fully-restricted with respect to direct calls from DID trunks.

Feature packaging

International Supplementary Features (SUPP) package 131.

Feature implementation

LD 10 - Enable Restricted Direct Inward Dialing for an analog (500/2500-type) telephones.

Prompt	Response	Description
...		
CLS	(UDI) RDI	This station (is not) is restricted from receiving direct DID calls.

Feature operation

No specific operating procedures are required to use this feature.

Copyright © 1994–2007, Nortel Networks
Nortel Networks Confidential

Reverse Dial on Routes and Telephones

Contents

This section contains information on the following topics:

"Feature description" (page 529)

"Operating parameters" (page 530)

"Feature interactions" (page 530)

"Feature packaging" (page 530)

"Feature implementation" (page 530)

"Feature operation" (page 530)

Feature description

This feature is used to allow a customer to define their dialpulse format as one of the following:

- regular dial format
- reverse dial format, or
- N+1 dial format.

The feature can be allowed or disallowed on either a route or on all telephones, on a customer basis, by associating a tone table with the route or customer, and setting the reverse dial format in the tone table as required.

Both the "*" and "#" are handled in the same manner as it exists in the regular format. Regular dial format is the default for the feature.

Copyright © 1994–2007, Nortel Networks
Nortel Networks Confidential

Operating parameters

The feature is supported for Central Office (CO), Foreign Exchange (FEX), Wide Area Telephone Service (WATS), TIE, and Direct Inward Dialing (DID) routes only. Internal system calls are unaffected, except when the feature applies to customers.

Feature interactions

There are no feature interactions associated with this feature.

Feature packaging

Flexible Tones and Cadences (FTC) package 125.

Feature implementation

LD 56 - Configure customer tone and ringing parameters.

Prompt	Response	Comment
...		
RDVL	(0) 1 2	No Reverse Dial format. Reverse Dial format 1 selected. Reverse Dial format 2 selected.

Feature operation

No specific operating procedures are required to use this feature.

Copyright © 1994–2007, Nortel Networks
Nortel Networks Confidential

Ring Again

Contents

This section contains information on the following topics:

"Feature description" (page 531)

"Operating parameters" (page 531)

"Feature interactions" (page 532)

"Feature packaging" (page 534)

"Feature implementation" (page 534)

"Feature operation" (page 535)

Feature description

Ring Again gives you the opportunity, after encountering a busy Directory Number (DN), to ring the DN again when it becomes free. If a dialed DN is busy, or if all the trunks are busy, pressing the Ring Again key asks the system to monitor the dialed DN or trunk. When it becomes available, the system notifies you. The call is automatically dialed again when you press the Ring Again key a second time.

When the system alerts you to Ring Again, you have a limited amount of time to respond. Analog (500/2500-type) telephones have six seconds, while Meridian 1 proprietary telephones have 30 seconds.

Operating parameters

A key/lamp pair must be assigned to Meridian 1 proprietary telephones for Ring Again. M2317 telephones access Ring Again with a soft key.

Several people can activate Ring Again against the same DN while it is busy. When the DN becomes free, the system notifies the first person in line.

Copyright © 1994–2007, Nortel Networks
Nortel Networks Confidential

For analog (500/2500-type) telephones, a Special Prefix (SPRE) or Flexible Feature Code (FFC) may be used.

Feature interactions

Attendant Blocking of Directory Number

It is possible to activate Ring Again towards a DN that is blocked due to the Attendant Blocking of DN feature.

Attendant Overflow Position

If Ring Again is activated against the Attendant Overflow Position (AOP) DN, notification is given to the originator when the telephone becomes idle. An AOP call, however, takes precedence over Ring Again notification on the AOP DN when the AOP DN becomes free.

Automatic Set Relocation

If Ring Again is active when a telephone is relocated, the feature is deactivated.

Basic/Network Alternate Route Selection (BARS/NARS)

If the system is equipped with BARS or NARS, the Ring Again feature is used with the Call Back Queuing option to queue for outgoing trunks.

Call Forward/Hunt Override Via Flexible Feature Code

Using the Ring Again feature is possible after using the Call Forward/Hunt Override FFC and encountering a busy signal. Ring Again can be placed against the set for which the Call Forward/Hunt Override FFC was used (that is, the set with CFW active should be rung by the Ring Again feature).

Call Waiting

The user is notified that a previously busy line is free only when both the original call and the waiting call have disconnected.

Calling Party Privacy

A call automatically redialed by the Ring Again – Busy Trunk feature will respect the Calling Party Privacy requested when the call was originally dialed.

Charge Account and Calling Party Number

When Ring Again is activated, no charge record is generated, but the information is stored for future use. If Ring Again is canceled before a trunk is seized, the charge number is deleted and no record is produced. If a trunk is seized later by Ring Again, the charge record is generated in the usual manner. The use of Ring Again with Charge Account ties up system resources because an auxiliary call register must be maintained in the Ring Again queue.

Copyright © 1994–2007, Nortel Networks Nortel Networks Confidential

China - Flexible Feature Codes - Outgoing Call Barring, Enhanced Flexible Feature Codes - Outgoing Call Barring

Ring Again cannot be activated after a call is barred by Outgoing Call Barring. Sets with display will not offer Ring Again.

Conference

This feature cannot be activated during a conference call.

Dial Access to Group Calls, Group Call

Ring Again cannot be applied to a Group Call.

Enhanced Override

Ring Again is the only other feature currently available once a busy telephone has been encountered. Ring Again is not allowed on an analog (500/2500-type) telephone making a Multi-Party Operations consultation call.

Group Hunt

Ring Again will not be supported.

Idle Extension Notification

During the time that an extension is supervised or temporarily blocked from receiving calls due to the Idle Extension Notification feature, it is possible to activate Ring Again towards that extension. It is also possible to request for Idle Extension Notification on an extension that is supervised for Ring Again. When the extension becomes idle, the Idle Extension Notification will be served first.

ISDN QSIG/EuroISDN Call Completion

Analog (500/2500-type) telephones can have only one Call Completion to Busy Subscriber request at a given time. Meridian 1 proprietary telephones can make Ring Again requests based on the number of Ring Again keys programmed on a telephone.

Multi-Party Operations

When a TSA Class of Service analog (500/2500-type) telephone with a call on hold encounters Busy Tone, Ring Again is not possible.

Ring Again is not allowed if the user of an analog (500/2500-type) telephone has a call on hold and receives a busy signal when calling a second party.

Network Intercom

Hot Line calls terminating on a busy key become normal calls. Hence, they may use the Ring Again feature under normal circumstances.

Copyright © 1994–2007, Nortel Networks
Nortel Networks Confidential

On Hold on Loudspeaker

Ring Again can be applied to a busy loudspeaker DN.

Override, Enhanced Override
Priority Override

Ring Again is the only other feature currently available once a busy telephone has been encountered. Ring Again is not allowed on an analog (500/2500-type) telephone making a Multi-Party Operations consultation call.

Preference Trunk Usage

Searching for an available trunk using the Ring Again feature is subject to the Preference Trunk Usage feature at trunk seizure time. Earlier trunk availability checks are not carried out.

Trunk Route Optimization - Before Answer

In case of call redirection, RGA is activated on the redirected number and not on the originally dialed number when Trunk Optimization - Before Answer (TRO-BA) is active.

Feature packaging

Ring Again is included in Optional Features (OPTF) package 1 and has no feature package dependencies.

Feature implementation

Task summary list

The following is a summary of the tasks in this section:

1. "LD 10" (page 534)

   Enable Ring Again for analog (500/2500-type) telephones.

2. "LD 11" (page 535)

   Enable Ring Again for Meridian 1 proprietary telephones.

LD 10

Prompt	Response	Description
REQ:	CHG	Change.
TYPE:	500	Telephone type.
TN		Terminal number
	l s c u	Format for Large System and CS 1000E system, where l = loop, s = shelf, c = card, u = unit.

Copyright © 1994–2007, Nortel Networks
Nortel Networks Confidential

Prompt	Response	Description
	c u	Format for Small System and Media Gateway 1000B where c = card and u = unit.
CLS	(XRD) XRA	Ring Again is (denied) or allowed.

LD 11

Prompt	Response	Description
REQ:	CHG	Change.
TYPE:	a...a	Telephone type. Type **?** for a list of possible responses.
TN		Terminal number
	l s c u	Format for Large System and CS 1000E system, where l = loop, s = shelf, c = card, u = unit.
	c u	Format for Small System and Media Gateway 1000B where c = card and u = unit.
KEY	xx RGA	Ring Again key, where: xx = key number (must be key 27 for M2317).

Feature operation

Ring Again is slightly different for each telephone type. Be sure to follow the correct operating instructions.

Meridian 1 proprietary telephones

To activate Ring Again after hearing a busy signal:

- Press **Ring Again**.
- Hang up, or press **Rls**.
- When you hear the Ring Again tone, lift the handset or select a free **DN**.
- Press **Ring Again**. The number is automatically dialed.

To cancel Ring Again:

- Press **Ring Again** before you hear the notification tone.

M2317 telephone

To activate Ring Again after hearing a busy signal:

- Press **RINGAGN**.
- Hang up, or press **Rls**.
- When you hear the Ring Again tone, lift the handset or select a free **DN**.

Copyright © 1994–2007, Nortel Networks
Nortel Networks Confidential

- Press **Call** . The number is automatically dialed.

To cancel Ring Again:

- Press **Call** before you hear the notification tone.

Analog (500/2500-type) telephones

To activate Ring Again after hearing a busy signal:

- Flash the switchhook or press **LINK**.
- Dial SPRE+1, or the Flexible Feature Code (FFC) assigned.
- When you hear the Ring Again tone bursts, lift the handset while you still hear the ringing. The number is automatically dialed.

To cancel Ring Again:

- Before you hear the notification tone, lift the handset and dial SPRE +2, or the FFC assigned, and hang up.

Copyright © 1994–2007, Nortel Networks
Nortel Networks Confidential

Ring Again on No Answer

Contents

This section contains information on the following topics:

"Feature description" (page 537)

"Operating parameters" (page 538)

"Feature interactions" (page 538)

"Feature packaging" (page 540)

"Feature implementation" (page 540)

"Feature operation" (page 541)

Feature description

The Ring Again No Answer (RANA) feature extends the capabilities of Ring Again for standalone applications, and Network Ring Again for Integrated Services Digital Network (ISDN) applications. The feature allows Ring Again to be applied to a station that does not answer.

This feature applies to Meridian 1 proprietary telephones, as well as analog (500/2500-type) telephones.

Users of Meridian 1 proprietary telephones, upon encountering a station that does not answer, can activate RANA by pressing the Ring Again (RGA) key. When the desired station goes off-hook, to make or receive a call, and then goes on-hook, the station that activated RGA receives a buzz through the telephone's loudspeaker (while the RGA lamp flashes, if that station is idle). The station user can dial the desired station by lifting the handset or pressing a DN key, and then pressing the RGA key.

Users of analog (500/2500-type) telephones, upon encountering a station that does not answer, can activate RANA by performing a recall, and then dialing the Ring Again Activate Flexible Feature Code, or dialing SPRE then

Copyright © 1994–2007, Nortel Networks
Nortel Networks Confidential

the digit 1. After receiving confirmation dial tone, the user goes on-hook to make or receive calls as usual. When the desired station goes off-hook, to make or receive a call, and then goes on-hook, the station that activated RGA receives six ring cycles as a Ring Again notification (if the station is idle). To dial the desired party, the station user has to go off-hook before the six-ring cycle ends. If the desired party goes off-hook while RANA is being applied, Ring Again Busy is activated instead of RANA.

To deactivate RANA from an analog (500/2500-type) telephone, the user goes off-hook and dials the Deactivate Ring Again or the Deactivate Feature Flexible Feature Code, or dials SPRE then the digit 2.

Operating parameters

Ring Again on No Answer cannot be applied:

- if the dialed DN is a Pilot DN
- to attendant consoles
- to a station which has been intercepted to the attendant
- to a station which is queued for an attendant
- to a station which has been recalled to an attendant due to misoperation
- to Automatic Call Distribution (ACD) stations
- to a station with Radio Paging active
- to trunks

Meridian 1 proprietary telephones must be equipped with a Ring Again (RGA) key/lamp combination.

Ring Again on No Answer is applied to the originally dialed DN only.

Feature interactions

Attendant Recall

A set that is recalling the attendant cannot apply Ring Again on No Answer.

Call Forward All Calls, Call Forward No Answer

If an unanswered call is forwarded to another station by any of these features, RANA is applied to the originally dialed station.

Call Forward/Hunt Override using Flexible Feature Code

Using the Ring Again No Answer feature is possible after using the Call Forward/Hunt Override FFC and encountering an idle set that does not answer. Ring Again No Answer can be placed against the set for which the Call Forward/Hunt Override FFC was used (that is, the set should be rung by the Ring Again No Answer feature).

Copyright © 1994–2007, Nortel Networks Nortel Networks Confidential

Group Hunting

RANA cannot be applied if the DN dialed was a Pilot DN.

Hunting

If RANA has been applied to a station going through a Hunt sequence, Ring Again is applied to that station and not the ringing station.

Intercept Treatment

A telephone that is intercepted to the attendant cannot apply Ring Again on No Answer.

Intercept to Attendant

RANA cannot be applied by a set that is intercepted to the attendant.

ISDN QSIG/EuroISDN Call Completion

Analog (500/2500-type) sets can have only one Call Completion to Busy Subscriber request at a given time. Meridian 1 proprietary sets can make Ring Again requests based on the number of Ring Again keys programmed on a set.

Multiple Appearance Directory Number

The Ring Again on No Answer feature will only function on Multiple Appearance Directory Numbers that have been assigned to two different sets provided that both users, with the Ring Again on No Answer activated, go off-hook to make a call and then go on-hook. If both users do not go off-hook then the originator will not receive a buzz through the loudspeaker.

Network Intercom

If Ring Again No Answer is activated for a Hot Type I call, it is activated as if the call had been dialed normally.

Phantom Terminal Numbers (TNs)

Although RANA can be applied to a phantom DN, it is not recommended. Because a phantom DN cannot be active or busy, the caller is not notified when the phantom DN's forward DN does not answer.

Queued Calls

RANA cannot be applied by a set which is being queued for the attendant or is in the attendant queue during Night Service.

Recall to Attendant due to Misoperation

RANA cannot be applied by a set that is recalling the attendant.

Copyright © 1994–2007, Nortel Networks
Nortel Networks Confidential

Recall to Same Attendant

A telephone that is recalling the attendant cannot apply Ring Again on No Answer.

Multiple Appearance Directory Number

The Ring Again on No Answer feature will only function on Multiple Appearance Directory Numbers that have been assigned to two different sets provided that both users, with the Ring Again on No Answer activated, go off-hook to make a call and then go on-hook. If both users do not go off-hook then the originator will not receive a buzz through the loudspeaker.

Telephones - M2317 and M3900

For RANA to function on M2317 and M3900 telephones, the telephones must be configured with a Ring Again (RGA) key. The Ring Again soft key will only be displayed when a busy call is encountered and will not be displayed during ring no answer.

Trunk Route Optimization - Before Answer

In case of call redirection, RANA is activated on the redirected number and not on the originally dialed number when Trunk Optimization - Before Answer (TRO-BA) is active.

Feature packaging

Advanced ISDN Network Services (NTWK) package 148 for network applications.

Feature implementation

Task summary list

The following is a summary of the tasks in this section:

1. "LD 15" (page 540)

   Enable the Ring Again on No Answer setting.

2. "LD 10" (page 541)

   Enable Ring Again for analog (500/2500-type) telephones.

3. "LD 11" (page 541)

   Enable Ring Again keys for Meridian 1 proprietary telephones.

LD 15

Prompt	Response	Description
REQ:	CHG	Change.
TYPE:	FTR	Features and options

Copyright © 1994–2007, Nortel Networks
Nortel Networks Confidential

Prompt	Response	Description
...		
OPT	(RND) RNA	Customer options. Ring Again on No Answer (denied) allowed.

LD 10

Prompt	Response	Description
REQ:	NEW CHG	Add, or change.
TYPE:	500	Type of set. Analog (500/2500-type).
...		
CLS	(XRD) XRA	Class of Service options. Ring Again (denied) allowed.

LD 11

Prompt	Response	Description
REQ:	NEW CHG	Add, or change.
TYPE:	a...a	Telephone type. Type **?** for a list of possible responses.
...		
KEY	RGA	Customer options. Ring Again on No Answer (denied) allowed.

Feature operation

Meridian 1 proprietary telephones

Place and Accept Ring Again on No Answer

Action	Response
1. User A calls user B.	User A receives ringback tone.
2. User A presses the Ring Again (RGA) key.	Indicator associated RGA key turns on steadily.
3. User A either goes on-hook or presses the Release (RLS) key.	Indicator associated with RGA key remains on and user A is now free to receive or make other calls.
4. User B, the user against which Ring Again was placed, goes off-hook to make a call, and then back on-hook.	User A is given a short buzz through the loudspeaker and the indicator associated with the RGA key will begin to flash.

Copyright © 1994–2007, Nortel Networks
Nortel Networks Confidential

Action	Response
5. User A either picks up the handset or presses a DN key.	User A receives dial tone.
6. User A presses the RGA key.	The user against which the Ring Again was placed is rung and the indicator associated with the RGA key is turned off.

Cancel Ring Again No Answer

Action	Response
1. User A presses the RGA key.	The indicator associated with the RGA goes from flashing to off, and ring again is cancelled.

Analog (500/2500-type) telephones

In the following feature operation description, the term recall refers to performing a register recall which may be performed in a number of different ways. Some examples are:

- Flash the switch hook (that is, the equivalent of hanging up the handset and picking it back up. This on-hook, off-hook is performed in a time period that is less than what the system would consider to be a valid disconnect).
- Press the flash or LINK button if equipped.

Place and Accept Ring Again No Answer

Action	Response
1. User A calls user B.	User A receives ringback tone.
2. User A performs a recall.	User B stops ringing and User A receives special dial tone.
User B must be in a ringing state for more than two seconds before recall is allowed.	
3. User A dials either the Ring Again Activate (RGAA) Flexible Feature Code, or the Special Prefix (SPRE) code followed by the digit "1".	User A receives dial tone indicating that the Ring Again was successfully placed.
4. User A goes on-hook.	User A is now free to receive or make other calls.

Copyright © 1994–2007, Nortel Networks
Nortel Networks Confidential

Action	Response
5. User B, the user against which the Ring Again was placed, goes off-hook to make a call, and then goes back on-hook.	User A is given six cycles of ringing as notification.
6. If User A picks up the handset before all six ringing cycles are complete.	User B is rung.
7. If user A does not pick up the handset before all six ringing cycles are complete.	Ring Again is cancelled.

Cancel Ring Again No Answer

Action	Response
1. User A goes off-hook.	User A receives dial tone.
2. User A dials either the Ring Again Deactivate (RGAD) Flexible Feature Code, the Deactivate Feature (DEAF) FFC, or the Special Prefix (SPRE) code followed by the digit "2".	User A receives dial tone indicating that the Ring Again cancellation was successful.

Copyright © 1994–2007, Nortel Networks
Nortel Networks Confidential

Copyright © 1994–2007, Nortel Networks
Nortel Networks Confidential

Ring and Hold Lamp Status

Contents

This section contains information on the following topics:

"Feature description" (page 545)

"Operating parameters" (page 546)

"Feature interactions" (page 546)

"Feature packaging" (page 546)

"Feature implementation" (page 546)

"Feature operation" (page 546)

Feature description

The standard lamp-interruption status indication used with the system is 60 impulse per minute (ipm) (flash) for incoming calls and 120 ipm (wink) for held calls on Meridian 1 proprietary telephones, or on terminals emulating Meridian 1 proprietary telephones. This feature, through a Class of Service assigned in LD 11, allows these indicators to be reversed (wink on incoming calls and flash on held calls for all keys that can carry a call, including the group-call key). Data modules with system firmware must use the standard indication of Reverse Lamp Flash Denied Class of Service.

This feature applies to the following key lamps:

- Directory Numbers (DNs)
- Conference
- Transfer
- Voice Call
- Call Waiting
- Dial Intercom Group

Copyright © 1994–2007, Nortel Networks
Nortel Networks Confidential

- Group Call (For Group Call, a fast blink can be configured to indicate that not all members of a group have answered a group call; a slow flash indicates that a call has been placed on hold by the originator.)
- Automatic Call Distribution (ACD) incalls
- ACD answer agent
- ACD supervisory call, and
- ACD emergency answer.

Operating parameters

This feature cannot be applied to analog (500/2500-type) telephones and attendant consoles.

This feature is not supported through Attendant Administration.

Feature interactions

Privacy Release

If the Privacy Release feature is activated for multiple-appearance single-call DNs, the blinking rate is based on the Class of Service of each set on which other appearances of the DN occur.

Feature packaging

International Supplementary Features (SUPP) package 131.

Feature implementation

LD 11 - Modify the data blocks for Meridian 1 proprietary telephones.

Prompt	Response	Description
...		
CLS	(RLFD) RLFA	Reversed Lamp Flash (denied) allowed.

Feature operation

No specific operating procedures are required to use this feature.

Copyright © 1994–2007, Nortel Networks
Nortel Networks Confidential

Ringback Tone from Meridian 1 Enhancement

Contents

This section contains information on the following topics:

"Feature description" (page 547)

"Operating parameters" (page 547)

"Feature interactions" (page 547)

"Feature packaging" (page 547)

"Feature implementation" (page 548)

"Feature operation" (page 548)

Feature description

With the current ringback handling, some Public Exchange/Central Office (CO) stations do not send the calling party any ringback tone when calling an analog (500/2500-type) telephone. This enhancement provides a calling-party ringback tone, when a call is placed to a system on a 2.0 Mbps digital Central Office (CO) trunk.

Operating parameters

There are no operating parameters associated with this feature.

Feature interactions

There are no feature interactions associated with this feature.

Feature packaging

International Supplementary Features (SUPP) package 131.

Copyright © 1994–2007, Nortel Networks
Nortel Networks Confidential

Feature implementation

LD 14 - Configure system Ringback Tone.

Prompt	Response	Description
...		
TYPE	COT	Central Office Trunk data block.
...		
CLS	(CORX) CORP	Central Office Ringback (not) provided by the system.

Feature operation

Ringback tone is provided until either the call has been answered by an attendant or abandoned by the originator.

Copyright © 1994–2007, Nortel Networks
Nortel Networks Confidential

Ringing Change Key

Contents

This section contains information on the following topics:

"Feature description" (page 549)

"Operating parameters" (page 549)

"Feature interactions" (page 550)

"Feature packaging" (page 550)

"Feature implementation" (page 550)

"Feature operation" (page 551)

Feature description

This feature allows the user of an M1000 series or digital telephone to change the ringing/non-ringing designation of a Single Call Ringing (SCR) or Multiple Call Ringing (MCR) directory number (DN) located on one of the telephone's key-lamp strips. This is done by using a Ringing Change (RCK) key.

Operating parameters

This feature does not apply to Private Line DNs.

The ringing designation of the Single Call Non-ringing (SCN) and Multiple Call Non-ringing DN keys cannot be changed by using the RCK key.

This feature requires a separate key/lamp configuration.

Copyright © 1994–2007, Nortel Networks
Nortel Networks Confidential

Feature interactions

Attendant Blocking of Directory Number

When the SACP key (or Signal Source) key is pressed to ring a blocked SCR where the Ring Change feature is activated, an audible ring signal will always be given. This is independent of the Ring Change status.

Directory Number Delayed Ringing

If an SCR/MCR key is toggled from "ringing" to "non-ringing", the Directory Number Delayed Ringing (DNDR) feature will apply to the key. If an SCR/MCR key is toggled again from "non-ringing" to "ringing", the key will be rung immediately and DNDR will no longer apply.

If an SCN/MCN key is toggled from "non-ringing" to "ringing", the DNDR key will ring immediately and DNDR will no longer apply. If an SCN/MCN is toggled again from "ringing" to "non-ringing", the key will not ring immediately and the DNDR feature will apply to the key.

Network Intercom

The ringing/non-ringing mode of an enhanced Hot Type D or of a Hot Type I key is not changeable by using the Ringing Change Key feature.

Feature packaging

International Supplementary Features (SUPP) package 131; and Ringing Change Key (RCK) package 193.

Feature implementation

LD 11 - Define a Ringing Change Key (RCK) for each Meridian 1 proprietary telephone to be equipped with one.

Prompt	Response	Description
...		
KEY	xx RCK y z	Key number, Ringing Change Key, first key lamp strip, second key lamp strip controlled by the key. y = (0)-7 z = 0-(3)-7 Only one RCK key per set is permitted.

Copyright © 1994–2007, Nortel Networks
Nortel Networks Confidential

Feature operation

Pressing the **RCK** key places the telephone in the Make Set Busy state. Incoming calls to the set receive busy tone, and Multiple Appearance DN calls terminate on another telephone. Pressing an idle **SCR or MCR DN** key indicates the ringing status of the key; a lit key lamp indicates a non-ringing status, and a flashing key lamp indicates a ringing status. Pressing the **SCR or MCR DN** key again changes the ringing status of the key. Pressing the **RCK** again stores the change, and causes the SCR or MCR key lamp to go dark.

During a system initialization a telephone is rendered in the Make Set Busy state. If both the Ringing Change Key and Make Set Busy features are equipped on a telephone, and an initialization occurs during operation of the **RCK** key, the RCK lamp goes dark to inform the user that the changes have not been stored. The MSB lamp is lit to inform the user that the telephone is still in Make Set Busy mode.

Copyright © 1994–2007, Nortel Networks
Nortel Networks Confidential

Copyright © 1994–2007, Nortel Networks
Nortel Networks Confidential

Ringing instead of Buzzing on Digital Telephones

Contents

This section contains information on the following topics:

"Feature description" (page 553)

"Operating parameters" (page 554)

"Feature interactions" (page 554)

"Feature packaging" (page 555)

"Feature implementation" (page 555)

"Feature operation" (page 555)

Feature description

The Ringing instead of Buzzing feature, allows a digital telephone to ring when a call is presented as follows:

- when the handset is off hook but the telephone is idle
- when the handset is off hook but the telephone is idle and when the user is busy on another line

Ringing alerts a user in a more obvious way than buzzing (previous operation).

If a call is presented to the telephone, it rings according to the Distinctive Ringing Class of Service (DRG1, DRG2, DRG3, and DRG4), instead of buzzing.

There are two Classes of Service which can be assigned in LD 11:

- RNGI (the set rings when idle but off hook and a call is presented)

Copyright © 1994–2007, Nortel Networks
Nortel Networks Confidential

- RNGB (the set rings when busy or idle, but off hook and a call is presented.

Operating parameters

This feature does not affect the features where a buzz is already provided, such as Ring Again or Manual Signaling.

Buzzing is the default configuration.

Ringing features such as Ringing Change Key, Network Distinctive Ringing or Executive Distinctive Ringing, if implemented, affect the way in which the telephone rings.

Any digital telephone can be assigned an RNGI or RNGB Class of Service.

This feature does not affect attendant consoles.

If an attempt is made to enter CLS BUZZ, RNGI or RNGB on an analog telephone programmed in LD 11, a service change error message is output.

Feature interactions

ACD calls

This feature affects calls to an M2216 telephone. Ringing is given to the agent when the CLS is programmed for ringing and the telephone is idle.

Hunting

For telephones with more than one DN, the RNGB Class of Service and Short Hunting programmed calls will ring, not buzz, when the telephone is already busy.

Short Hunting allows calls to hunt to the next higher available key on a proprietary telephone, when a call is already established on a DN key.

Short Buzz for Digital Telephones

The Ringing instead of Buzzing feature takes precedence over the Short Buzz for Digital Telephones feature.

Third Party Applications

Applications which attach to or emulate a digital telephone can be affected by this feature.

Tones, Flexible Incoming

The Ringing instead of Buzzing feature takes precedence over the Tones, Flexible Incoming feature.

Copyright © 1994–2007, Nortel Networks
Nortel Networks Confidential

Feature packaging

This feature is included in base system software.

Feature implementation

LD 11 - Configure the Ringing instead of Buzzing feature on digital telephones.

Prompt	Response	Description
REQ:	CHG	Change.
TYPE:	a...a	Telephone type. Type **?** for a list of possible responses.
TN		Terminal number
	l s c u	Format for Large System and CS 1000E system, where l = loop, s = shelf, c = card, u = unit.
	c u	Format for Small System and Media Gateway 1000B where c = card and u = unit.
CLS	(BUZZ)	Buzz (default).
	RNGI	Ringing applied when telephone is idle but off hook.
	RNGB	Ringing applied when telephone is idle but off hook or busy on the other line.

Feature operation

No specific operating procedures are required to use this feature.

Copyright © 1994–2007, Nortel Networks
Nortel Networks Confidential

Copyright © 1994–2007, Nortel Networks
Nortel Networks Confidential

Room Status

Contents

This section contains information on the following topics:

"Feature description" (page 557)

"Operating parameters" (page 559)

"Feature interactions" (page 559)

"Feature packaging" (page 560)

"Feature implementation" (page 560)

"Feature operation" (page 562)

Feature description

Room Status allows customers equipped with a Background Terminal (BGD) to store and retrieve data pertinent to the occupancy, readiness, or cleaning status of any guest room or group of guest rooms.

When equipped with the Room Status software, the system provides the following Room Status information:

- Guest registration and occupancy

OC	(occupied)
VA	(vacant)
CH	(check in)
CH OU	(check out)

- Cleaning status

RE	(cleaning required)
PR	(cleaning in progress)

Copyright © 1994–2007, Nortel Networks
Nortel Networks Confidential

CL	(room cleaned)
FA	(failed inspection)
PA	(passed inspection)
SK	(cleaning skipped)

- Sale status

NS	(not for sale)
SA	(ready for sale)

- Other status information

CCOS	(Controlled Class of Service)
DND	(Do Not Disturb)
MW	(Message Waiting)
CA	(Category one – 1 to 15)
TL	(telephone check)

Do Not Disturb (DND) has been enhanced for interaction with Room Status on an analog (500/2500-type) telephones. A new customer option allows a visual indication of when the analog (500/2500-type) telephone is in the DND mode: the lamp on the telephone lights up.

The Room Status feature provides four methods of accessing the Room Status data:

- Off-hook detection: Hotel and hospital staff generally clean occupied rooms during certain hours of the day. From a Background Terminal (BGD), an option can be entered to set all occupied rooms to "cleaning status request" mode for a predefined time-of-day interval. During this interval, the system monitors the room telephone's switchhook state to detect a change in the Room Status.
- Dial Access: This method is an enhancement to the off-hook detection method for updating the room cleaning status. This method offers seven cleaning-status options, as compared to the two offered by off-hook detection. Again, you allow or deny the dial access method by using the Background Terminal commands.
- Room Status key: A Room Status key (RMK) can be provided on a Meridian 1 proprietary set. This allows the telephone user to read or alter the status of any room in the system.
- Background Terminal: The Room Status feature is administered from a Background Terminal (BGD) assigned to the customer. BGDs are

Copyright © 1994–2007, Nortel Networks
Nortel Networks Confidential

defined in the configuration record and are connected to the system through a Serial Data Interface (SDI) port. Devices used as BGDs can be any ASCII serial terminal conforming to EIA RS-232C or CCITT V.24 standards.

Operating parameters

The Room Status key (RMK) is supported only on telephones equipped with a display.

A room telephone is defined with Controlled Class of Service allowed (CCSA). The following telephones are supported as room phones:

- Analog (500/2500-type) telephones
- Meridian 1 proprietary sets

The M2317 and ACD telephones are not supported as room phones. Room Status is not supported on telephones with DTA (data terminal allowed) Class of Service. The RMK is not supported on attendant consoles.

A room telephone is allowed to change the status of its own room.

The Room Status feature is mutually exclusive with the Multiple-Tenant, Centralized Attendant Service (CAS), and Coordinated Dialing Plan (CDP) features.

A message center must be defined for the Do Not Disturb (DND) visual indication function on an analog (500/2500-type) telephones. This is mutually exclusive of Integrated Messaging System (IMS) and Meridian Mail Message Centers.

All analog (500/2500-type) telephones that are to use the Do Not Disturb (DND) visual indication must also have an LPA (Lamp Allowed) Class of Service.

Feature interactions

Attendant Administration

Room Status is not supported by Attendant Administration.

Automatic Wake Up

Room Status and Automatic Wake Up both use the Background Terminal (BGD). If the WAKE option is selected for the check-in/check-out operation, the wake-up call for that room is canceled after a check-in or check-out operation.

Copyright © 1994–2007, Nortel Networks
Nortel Networks Confidential

Automatic Wake Up FFC Delimiter

When a guest has either checked in or out, the room status changes. If an AWU request is still active, it is canceled if it is included as part of the Check In/Out option.

Controlled Class of Service

You can change the access restrictions for room telephones from the BGD or from a telephone equipped with a Room Status key (RMK).

Hot Line

The Room Status feature is incompatible with any telephone for which going off-hook activates Hot Line.

Maid ID

Maid ID is not required but is recommended to track maid performance. The Maid ID must be entered each time the Room Status changes, or it will not be recorded.

Multiple Tenant

Telephones equipped with an RMK can change the Controlled Class of Service (CCOS) of telephones for any tenant in a Customer Group.

Off-Hook Alarm Security

Cleaning changes entered using the Off-Hook Detection Method are mutually exclusive with the Off-Hook Alarm Security (OHAS) feature. OHAS takes precedence over the off-hook detection method of the Room Status feature. If a telephone is defined with the Alarm Security Allowed (ASCA) Class of Service, the off-hook detection method does not work.

Feature packaging

Room Status (RMS) package 100 requires the following:

- Controlled Class of Service (CCOS) package 81, and
- Background Terminal Facility (BGD) package 99.

For lamp status, the requirements are as follows:

- Do Not Disturb, Individual (DNDI) package 9, and
- Message Waiting Center (MWC) package 46.

Feature implementation

Task summary list

The following is a summary of the tasks in this section:

1. "LD 10" (page 561)

Copyright © 1994–2007, Nortel Networks
Nortel Networks Confidential

Enable Controlled Class of Services (CCOS) for analog (500/2500-type) telephones requiring Room Status updates.

2. "LD 11" (page 561)

   Enable Room Status key (RMK) for digit display telephones used for Room Status.

3. "LD 15" (page 562)

   Change Customer Data Block to allow (or disallow) visual indication of Do Not Disturb (DND) feature. Offered on the customer level, this applies only to analog (500/2500-type) telephones equipped with a Message Waiting (MW) lamp.

This procedure assumes that a BGD has been assigned. See *Hospitality Features Fundamentals (NN43001-553)* for a complete description and list of commands for the Background Terminal.

LD 10

Prompt	Response	Description
REQ:	CHG	Change.
TYPE:	500	Telephone type.
TN		Terminal number
	l s c u	Format for Large System and CS 1000E system, where l = loop, s = shelf, c = card, u = unit.
	c u	Format for Small System and Media Gateway 1000B where c = card and u = unit.
CLS	(CCSD) CCSA	Controlled Class of Service (denied) allowed.

LD 11

Prompt	Response	Description
REQ:	CHG	Change.
TYPE:	a...a	Telephone type. Type **?** for a list of possible responses.
TN		Terminal number
	l s c u	Format for Large System and CS 1000E system, where l = loop, s = shelf, c = card, u = unit.
	c u	Format for Small System and Media Gateway 1000B where c = card and u = unit.

Copyright © 1994–2007, Nortel Networks
Nortel Networks Confidential

Prompt	Response	Description
CLS	ADD DDS	Automatic digit display enabled. Digit display enabled.
KEY	xx RMK	Room Status key.

LD 15

Prompt	Response	Description
REQ:	CHG	Change.
TYPE:	FTR	Features and options
CUST		Customer number
	0-99	Range for Large System and CS 1000E system.
	0-31	Range for Small System and Media Gateway 1000B.
- DNDL	YES (NO)	Indicator goes on when DND is active. Indicator does not go on (the default).
...		
TYPE	CCS	Gate opener.
- CCRS	UNR	Unrestricted call service.
	CUN CTD TLD SRE FRE FR1 FR2	With CCOS active, the restrictions entered apply.

Feature operation

To read the Room Status by using the RMK (display needed):

- Without lifting the handset, press the **RMK key**.
- Dial the Directory Number (DN) of the room telephone. The DN is displayed, followed by a dash and a two-digit code.
- The first digit indicates occupancy: zero (0) means vacant, one (1) means occupied.

  The second digit indicates Room Status:

  — 1 = RE (cleaning required)

  — 2 = PR (cleaning in progress)

  — 3 = CL (cleaned)

  — 4 = PA (passed inspection)

  — 5 = FA (failed inspection)

  — 6 = SK (cleaning skipped), and

Copyright © 1994–2007, Nortel Networks
Nortel Networks Confidential

— 7 = NS (not for sale).

To change the Room Status by using the RMK:

- Without lifting the handset, press the **RMK key**.
- Dial the Directory Number (DN) of the room telephone.
- Dial the new room status as follows:
  - — 1 = RE (cleaning required)
  - — 2 = PR (cleaning in progress)
  - — 3 = CL (cleaned)
  - — 4 = PA (passed inspection)
  - — 5 = FA (failed inspection)
  - — 6 = SK (cleaning skipped), or
  - — 7 = NS (not for sale).
- Press the **RMK key**.

To change the Room Status by using Dial Access (from the room telephone):

1. Lift the handset and dial SPRE 86.
2. Dial the room status as shown below:
   - 1 = RE (cleaning required)
   - 2 = PR (cleaning in progress)
   - 3 = CL (cleaned)
   - 4 = PA (passed inspection)
   - 5 = FA (failed inspection)
   - 6 = SK (cleaning skipped), or
   - 7 = NS (not for sale).
3. Dial * and the Maid ID followed by #, if required.
4. Hang up or press **RIs**.

   For complete details on the Room Status operation, see *Background Terminal User Guide*.

Copyright © 1994–2007, Nortel Networks
Nortel Networks Confidential

Copyright © 1994–2007, Nortel Networks
Nortel Networks Confidential

Nortel Communication Server 1000

Features and Services Fundamentals—Book 5 of 6 (N to R)

Copyright © 1994–2007, Nortel Networks
All Rights Reserved.

Publication: NN43001-106
Document status: Standard
Document version: 01.01
Document date: 30 May 2007

To provide feedback or to report a problem with this document, go to www.nortel.com/documentfeedback

Sourced in Canada.

The information in this document is subject to change without notice. The statements, configurations, technical data, and recommendations in this document are believed to be accurate and reliable, but are presented without express or implied warranty. Users must take full responsibility for their applications of any products specified in this document. The information in this document is proprietary to Nortel Networks.

Nortel, the Nortel logo and the Globemark are trademarks of Nortel Networks.

All other trademarks are the property of their respective owners.