NOTES:

1. WIRES SHALL BE SLATE IN COLOR UNLESS OTHERWISE SPECIFIED.
2. PT - LEADS FURNISHED WITH COMPONENT
3. REFERENCE DESIGNATIONS Z1, Y1 ETC. ARE FOR REFERENCE ONLY AND NEED NOT BE STAMPED ON APPARATUS
4. ALL SOLDER PER 50016 METHOD L, UNLESS OTHERWISE SPECIFIED ON SUB-ASSEMBLY DRAWINGS.
5. - - - - PRINTED CIRCUIT WIRING.

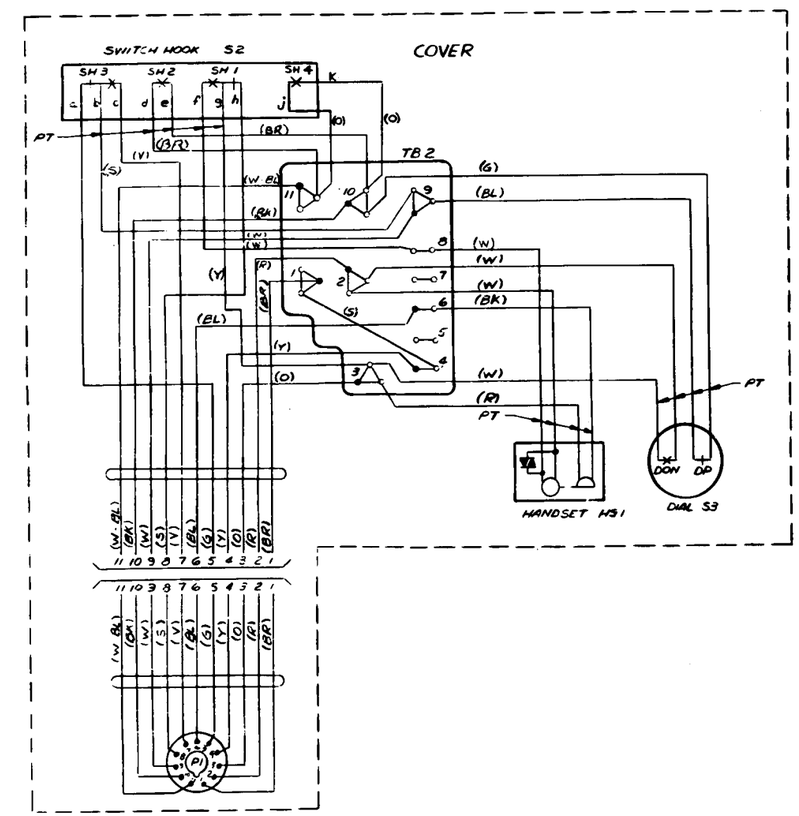

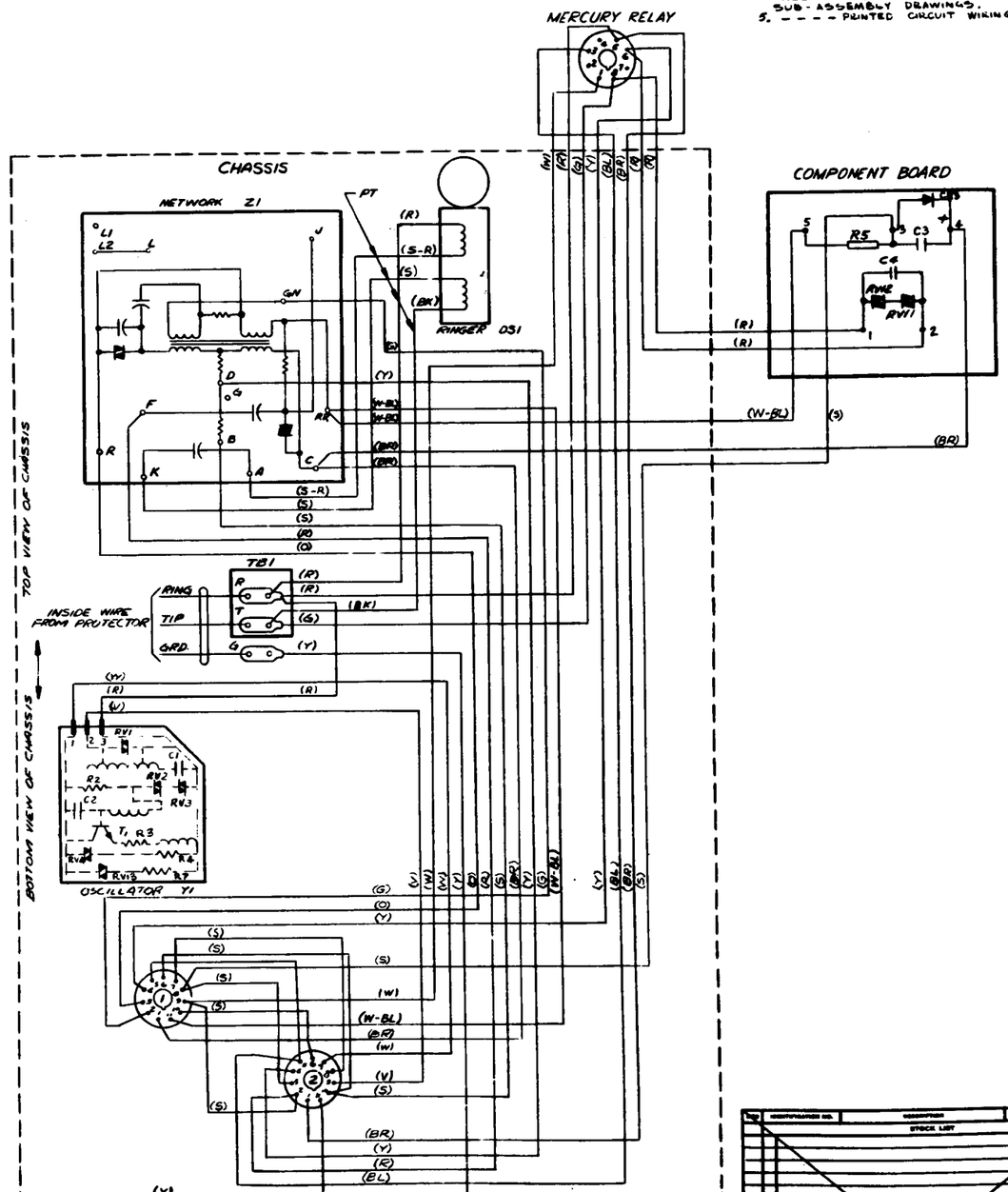

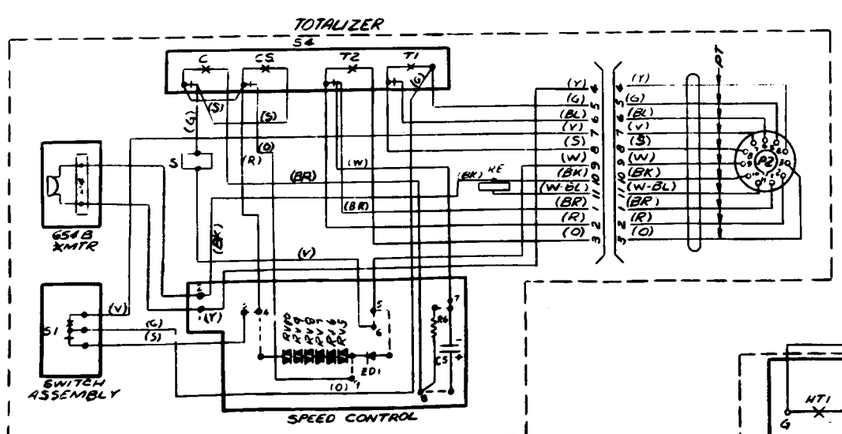

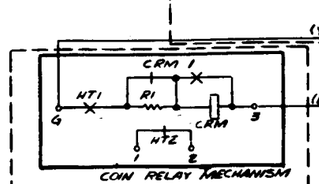

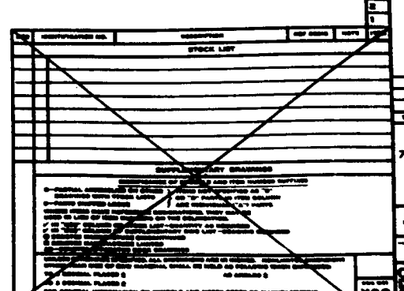

A-560507

TELEPHONE SET CONNECTING DIAGRAM

X85

A-560507