BUILDING ELECTRICAL SYSTEMS

GROUNDING

CONTENTS PAGE

1. GENERAL 1

2. PURPOSE 1

3. REQUIREMENTS 2

4. ALTERNATING CURRENT (AC) SERVICE GROUND 2

5. ALTERNATING CURRENT EQUIPMENT GROUNDING 2

6. GROUNDING ELECTRODE SYSTEM . . . 4

A. *Office Ground Electrodes* (Section 802-001-191) 4

B. Grounding Electrode Conductor . . 5

7. CENTRAL OFFICE GROUND SYSTEM (VERTICAL EQUALIZER) 5

8. TRANSFORMERS 6

9. REFERENCES 6

Figures

1. Typical Grounding Schematic 7

2. Simplified Service and Equipment Grounding Schematic 8

3. Equipment Bonding 8

4. Conduit Bonding 9

1. GENERAL

1.01 This section covers selected requirements and engineering information pertaining to the provision of grounding in telephone company (Telco) buildings. It defines the function of the AC service neutral conductor and the method of providing ground reference to the neutral.

1.02 Whenever this section is reissued, the reason(s) for reissue will be given in this paragraph.

1.03 This section covers the primary responsibilities of the building electrical designer with respect to grounding. The selected requirements summarized in the section are derived from sections:

- 802-001-180—General Grounding Requirements
- 802-001-190—Ground Systems Material
- 802-001-191—Ground Electrodes
- 802-001-192—Central Office Ground System
- 802-001-198—Grounding for AC Service Distribution.

2. PURPOSE

2.01 The primary purposes of a dependable low impedance grounding system are:

(a) ***Personnel Safety:*** To maintain low potential between frames, cabinets, ironwork, and other conductive components so as to minimize the possibility of electrical shock hazard.

(b) ***Equipment Protection:*** To supply adequate low impedance fault current paths so that overcurrent devices will function efficiently and to avoid fire hazard through elimination of high impedance points.

(c) ***Equipment Operation:*** To provide a common voltage reference and an equalized

©American Telephone and Telegraph Company, 1983

ground reference throughout the ground plane to circuits connected to it.

(d) ***Noise Reduction:*** To assist in the reduction of noise in communication circuits by ensuring that impedance is minimal between ground points throughout the system.

(e) ***Reliability:*** To maintain a ground network that resists deterioration or inadvertent disconnection and requires minimal maintenance to retain optimal effectiveness for the life of the installation.

2.02 To ensure that an effective ground network is available throughout the communication network, it is necessary to engineer a low impedance grounding system for all Bell System buildings.

3. REQUIREMENTS

3.01 The building engineering organization is responsible for providing the following:

- The main commercial AC service grounding electrode conductor
- The grounding electrode system or made electrode
- The "green wire" or AC equipment grounding conductor system
- The central office ground system up to and including the floor CO ground bar(s).

4. ALTERNATING CURRENT (AC) SERVICE GROUND

4.01 The AC service distribution systems in Telco buildings are almost without exception ***solidly grounded*** systems. This is accomplished by intentionally grounding one of the conductors (the neutral) by connecting it to a grounding electrode. (See Fig. 1.) The most common AC system encountered employs a service transformer with the secondary connected in a ***wye*** configuration providing three phase, four-wire AC service. In small installations, the secondary system may be single phase, three-wire service. Refer to Section 760-400-110, Voltage, for details.

4.02 The service ground is intended to limit the voltage on the system owing to lightning or other causes which may impose a voltage on the circuit higher than that for which it was designed, and to limit the maximum potential to ground due to normal voltage.

4.03 The neutral conductor is usually grounded at the service transformer by the serving utility and must always be grounded at the electric service switchboard. The neutral shall ***not*** , under any circumstances, be connected to a grounded object on the load side of the main disconnect device.

4.04 Neutral conductors are insulated current carrying leads and connection to a grounded object would create a load current path through the grounded objects in parallel with the neutral conductor. A neutral conductor must never be used as a source of ground reference for the same reason.

4.05 It cannot be emphasized too strongly that a neutral (grounded) conductor is ***not*** a grounding conductor. It is a single point grounded current carrying circuit conductor.

5. ALTERNATING CURRENT EQUIPMENT GROUNDING

5.01 Equipment grounding, in contrast with system grounding, relates to the manner in which nonelectrical conductive material, which either encloses energized conductors or is adjacent to them, is to be interconnected or grounded. The AC equipment ground bonds these conducting materials together to form a permanent and continuous path to the grounding electrode and provides a connection (ie, bonding jumper) to the grounded conductor (neutral).

5.02 The AC equipment ground is intended to prevent an objectionable potential above ground on conductor and equipment enclosures. It also provides a low impedance path for fault currents by connecting the equipment grounding circuit to the neutral at the source. The equipment grounding circuit or path must connect with the grounding electrode in a low impedance path, and it must also be connected through a low impedance path to the neutral.

5.03 The National Electrical Code (NEC) requires that the path to ground from circuits (feeder and/or branch), equipment, and conductor enclosures shall:

(a) Be permanent and continuous.

(b) Have capacity to conduct safely any fault current to be imposed on it.

(c) Have sufficiently low impedance to limit the voltage to ground and to facilitate the operation of the circuit protective devices.

5.04 To ensure the above requirements of continuity and low impedance and to provide additional insurance against noise generated in AC systems, all circuits shall include the "green wire" sized per table 250-95 of the NEC, even when metallic conduit is used, with certain exceptions. This exceeds NEC requirements, and is explained in detail in Section 802-001-198, Grounding for AC Service Distribution.

5.05 The equipment grounding path, therefore, will extend from the furthermost point on the circuit to the electric service switchboard where it is connected to the grounded conductor. This connection is made through the bonding jumper, PR. (See Fig. 2.) The grounding electrode conductor connects both the grounded (neutral) conductor and the equipment grounding system to the grounding electrode. The equipment grounding path is extended to downstream equipment enclosures through the conductivity of the conductor enclosure (conduit, etc) and through the green wire which provides a path parallel to the conductor enclosure. The two conductors are considered to be one, the primary path for fault current return.

5.06 Should insulation failure occur anywhere on a phase conductor so that a ground fault develops between the live conductor and the conductor enclosure, a ground fault circuit will be established as shown in Figure 2. The ground fault circuit of relatively low impedance will thus be from the point of fault on the phase conductor, usually through an arc, to the equipment grounding circuit, through the bonding jumper to the grounded conductor or neutral. The circuit is then completed through the transformer neutral to the phase conductor which has developed a ground fault, then through the various overcurrent devices that may be in series ahead of the ground fault to the point of fault.

5.07 A secondary parallel ground fault path is through the grounding electrode conductor RG2 and system grounding electrode G2, through the earth and transformer grounding electrode G1 and transformer grounding electrode conductor G1X to the transformer. (See Fig. 2.) There are other parallel ground fault circuits such as the building steel. These may have only a relatively small resistance but because in each case the other side of the circuit is a conductor within a different metallic enclosure and is widely separated, all such parallel circuits will have a high reactance and thus will not divert any significant amount of current from the main relatively low impedance path which is through the grounded conductor to the transformer, R to X.

5.08 Generally, because of this high reactance, not more than about 10 percent of the total ground fault current will flow over all the secondary or parallel paths. The main bonding jumper RP must, therefore, have conductivity sufficient to carry not less than 90 percent of the total ground fault current that may flow in the system. That ground fault current must be large enough to interrupt the fault in a reasonable time by operating the overcurrent device.

5.09 The AC equipment ground system is composed of two components (1) raceways, and (2) a network of green insulated conductors. The conductors are extended through the raceways that carry the phase conductors and connected to noncurrent carrying framework of the apparatus associated with the system. The purpose is (1) to enhance the raceway conductivity so as to ensure a low impedance path for fault current from a point of fault to overcurrent protective devices, which in turn ensures fast operation, (2) to bond across inadvertent discontinuities in raceway conductance, and (3) to short-out noise producing high impedance joints in raceways.

5.10 Metallic raceways recognized by the NEC as acceptable equipment grounding conductors are listed in NEC 250-91(b). When installed in accordance with NEC requirements, they satisfy code equipment grounding requirements. The addition of green wire equipment grounding conductors, in addition to the raceway, is a Bell System requirement. The equipment ground conductor requirements are similar but not identical to NEC requirements for grounding of equipment when nonmetallic raceway is used. The conductor requirements are covered in Section 801-001-198. It is assumed that a metallic raceway system conforming to NEC requirements always exists with the conductor system. Use of nonmetallic raceways in Bell System buildings is not recommended.

5.11 At each equipment unit such as a panel board, motor, splice box, etc, the equipment ground-

ing conductor is bonded to the equipment in accordance with NEC Article 250G. The equipment grounding conductor must also be connected to the metal of intermediate splice boxes and pull boxes in the raceway run. This provides a continuous path to ground in parallel with the metallic raceway which ensures the safe passage of fault currents to ground, even though the metallic raceway may not be electrically continuous due to loose or corroded joints. (See Fig. 3.)

5.12 Any AC distribution cabinet downstream of the main disconnect means for the distribution system, eg, lighting and power panels, power distribution service cabinets (PDSC), etc, shall ***not*** have the neutral and equipment ground bus connected together. The neutral bus shall be electrically isolated from the cabinet. If a ground bar is furnished with the cabinet, it shall be bonded to the cabinet. All equipment grounding conductors (green wires) shall terminate on this bar or be bonded to the cabinet similar to raceways.

5.13 Equipment grounding of Operations Support System (OSS) computers shall be designed in accordance with Section 802-001-196. This section can also be used for large data processing systems, subject to the approval of the computer manufacturer.

6. GROUNDING ELECTRODE SYSTEM

6.01 The grounding electrode system is defined in NEC 250-81. It consists of the principal and supplementary earth electrodes and the conductor connecting them to the system neutral: the grounding electrode conductor. (See Fig. 1.)

A. Office Ground Electrodes (Section 802-001-191)

6.02 The term "Office Ground Electrode" refers to the ground electrode whose extension into the building is used as the office principle ground point (OPGP) for connection to equipment grounding systems serving communication and computer installations.

6.03 Ground (Zero) potential is established by means of an electrode buried in the earth surrounding the installation. The electrode may be a metallic water pipe, when suitable; a system of buried driven rods interconnected with bare wire; a ground plane of horizontal buried wires; or a combination of these systems dependent on physical and electrical properties of the water system, building design, soil, and bedrock.

6.04 ***Water Pipe Ground:*** A metallic underground water piping system, when available, shall always be used as the office ground electrode. The water pipe shall be an electrically continuous underground public system or a private system of buried metallic pipes and well casing. The water piping system must be checked for continuity or verified as such with the water company.

6.05 Water companies have been increasingly employing nonmetallic pipe and insulating couplings to eliminate corrosion problems. Use of nonmetallic gaskets may also render the water pipe system useless as a ground electrode. The possibility that the water company may create one of these conditions at a future time should also be considered. However, please note that 40 feet of electrically continuous buried piping will suffice as the grounding electrode, and usually the water service pipe will be at least that long. The NEC 250-81 (a) requires that a metal underground water pipe be supplemented by an additional electrode.

6.06 A private water system is second only to a public water system as the office ground electrode. Minimum requirements, which normally will be exceeded in a practical system, are as follows: The buried portion of the pipe (including well casings bonded to the piping system) shall exceed 40 feet. The use of a drilled well for the ground electrode will normally result in substantially lower resistivity than that obtained by means of a driven ground.

6.07 A concrete encased electrode provides a good low resistivity path to earth. Such an electrode consists of not less than 20 feet of bare copper conductor not smaller than No. 4 AWG encased by at least 2 inches of concrete, and located within and near the bottom of a concrete foundation footing that is in direct contact with earth.

6.08 A concrete encased electrode is a good choice for the supplementary electrode required by the NEC when a water pipe system is used, or for a "made" electrode for buildings that do not house telecommunications equipment. The concrete encased electrode should not be used as the only electrode at telecommunications buildings because of the possibility of corrosion from DC ground return currents.

6.09 Only if a satisfactory water pipe ground is not available, then one of the "Made" electrodes

as described in Section 802-001-191, Ground Electrodes, should be provided. An exception to this general rule is that a ring ground system is required for microwave radio stations even though a water pipe suitable as a grounding electrode exists. Section 802-001-197, Grounding of Microwave Radio Stations, covers this in detail.

B. Grounding Electrode Conductor

6.10 The grounding electrode conductor connects the grounding electrode(s) to the neutral bus in the electric service switchboard as specified in NEC Article 250-23. (See Fig. 1.)

6.11 The grounding electrode conductor shall be insulated copper wire, solid or stranded. Wire size shall be in accordance with NEC Article 250-94. It should be run as directly as practical with minimum bends and no sharp bends. Preferably, it shall be surface supported and visible for inspection. Where run through walls, partitions, etc, the wire should be routed through nonmetallic sleeves. It should not be routed through metal that forms a ring or in metallic conduit, where avoidable. If so routed, the conductor must be bonded to any enclosing ring, and at each end of the metallic conduit. (See Fig. 4.)

6.12 The grounding electrode conductor is also sometimes referred to as:

- AC service grounding conductor
- AC system grounding conductor
- Main grounding conductor
- Common main grounding conductor.

6.13 When the AC service grounding electrode is different from the communication systems grounding electrode, the two electrodes must be bonded together to form a single, common electrode, as specified in NEC 250-81. This is mandatory and is required to limit any potential difference between the separate electrodes. This bonding also extends to buried metallic objects such as fence posts, buried tanks without cathodic protection, lightning rods, and other metallic items within 6 feet of the grounding electrode.

6.14 The grounding electrode conductor is sized in accordance with NEC Article 250-94 and table 250-94. As can be seen, the size of the grounding electrode conductor is based on the size of the largest service entrance conductor or the equivalent area for parallel conductors.

7. CENTRAL OFFICE GROUND SYSTEM (VERTICAL EQUALIZER)

7.01 A vertical equalizer is required to bond the floor central office ground buses together in multifloor buildings, and to provide earth potential reference to the Central Office Ground System. See Section 802-001-192, Central Office Ground System. The vertical equalizer serves:

(1) As a current path for ground current interchange between discharge ground circuits on various floors during periods of load unbalance

(2) As a low impedance path for fault currents

(3) As an effective extension of earth potential (ground electrode) to each central office ground bus connected to it.

7.02 With this arrangement, any floor central office ground bus may be considered as an appearance of the grounding electrode and any equipment requiring connection to a grounding electrode for proper operation and/or protection shall be connected to the central office ground bus on the same floor as the equipment.

7.03 A vertical riser may be a continous length of 750 MCM (No. 4/0 for single story buildings) insulated copper conductor or the steel of a building column. When the 750 MCM conductor is used, the vertical run shall be as straight as practicable with only minor bends or offsets to clear obstructions such as floor beams. No metallic conduit, sleeves, or clamps should encircle the conductor, but if unavoidable must be bonded per Fig. 4. ***Sharp bends are not permitted.***

7.04 Certain types of building columns may be employed as the central office ground system vertical equalizer. Refer to Section 802-001-192, Central Office Ground System, for specific application data.

7.05 The floor central office ground buses are made of copper, and are usually 1/4 inch x 4 inches x 16 inches or other required length. The use of alu-

minum for central office ground bus bars is not permitted. All connections to this bus bar shall be by a thermal welding process (eg, Cadweld, Thermoweld, etc) or by means of ***2 hole*** crimp connectors. Refer to Section 802-001-190, Ground Systems Material, for details.

7.06 The ground bus, on every equipment floor, is located on the vertical column which serves as the vertical equalizer; or on that column or wall that best serves the requirements of the building design when a cable conductor is used as the vertical equalizer. In steel frame buildings the ground shall be connected to building steel as described in Section 802-001-190.

7.07 More than one vertical equalizer may be required, depending on the floor area of the building. The maximum conductive run length between a bus and the furthest grounded equipment unit is restricted to those units within the perimeter of a square superimposed on a circle of a 100 foot radius from the central office ground bus. Generally, when a building perimeter is more than 100 feet from the bus, a second vertical equalizer may be required. Under this condition, it is necessary to provide a horizontal bond between the vertical risers at every third floor to provide equalization paths.

8. TRANSFORMERS

8.01 Insulating transformers, but not autotransformers, constitute a separately derived system and must be grounded in accordance with NEC Article 250-26. Sections 802-001-180 and -198 covers this information in detail.

9. REFERENCES

9.01 This material was based on the following references:

National Fire Protection Association (NFPA) 70 National Electrical Code (NEC).

Recommended Practice for Grounding of Industrial and Commercial Power Systems, IEEE STD 142-1982 "Green Book."

Grounding Electrical Distribution Systems for Safety - Soares - International Association of Electrical Inspectors - 1981.

760-400-110	Voltage
802-001-180	General Grounding Requirements
802-001-190	Ground System Material
802-001-191	Ground Electrodes
802-001-192	Central Office Ground System
802-001-196	Grounding Computer Systems
802-001-197	Grounding of Microwave Radio Stations
802-001-198	Grounding for AC Service Distribution

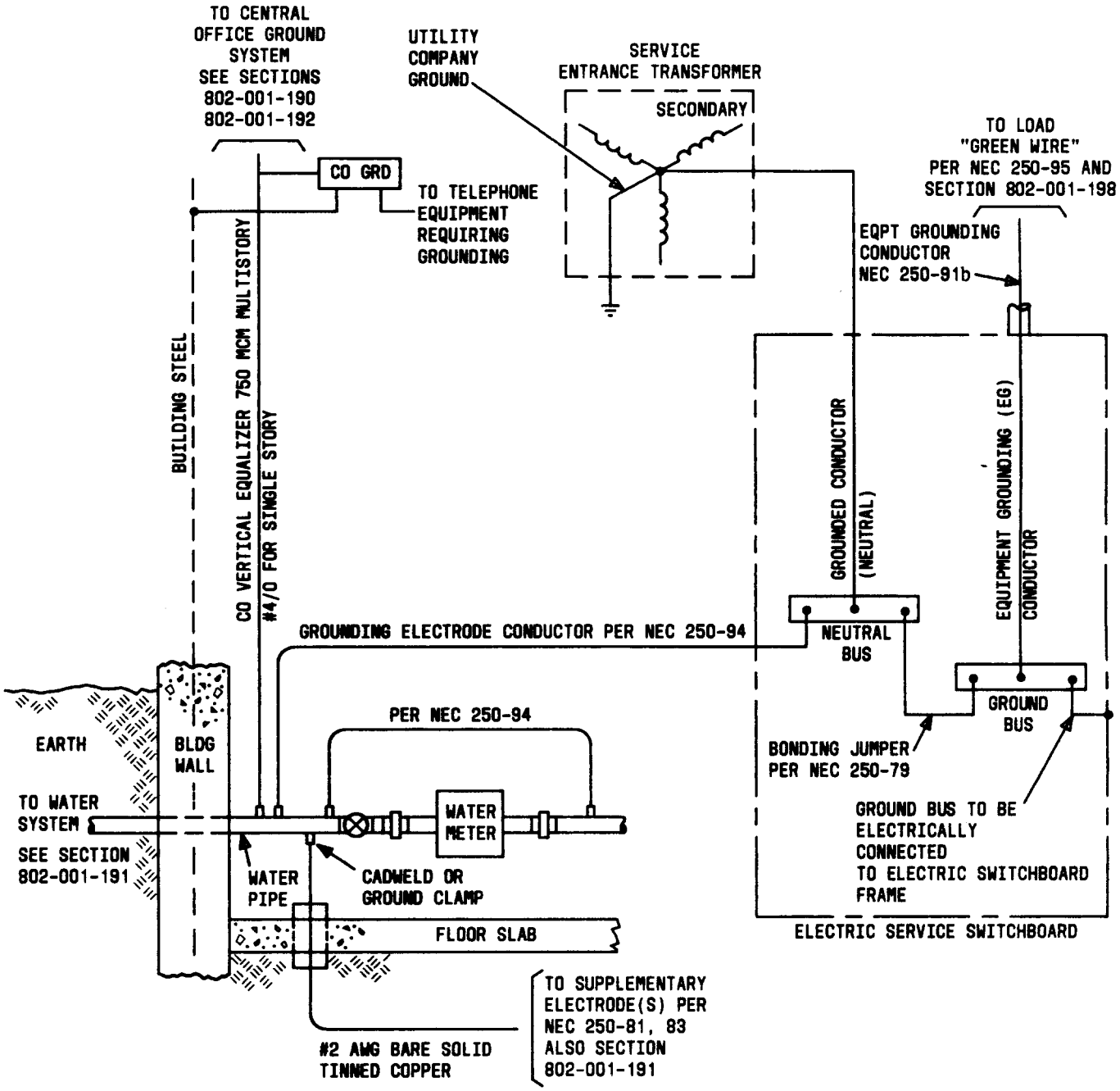

Fig. 1—Typical Grounding Schematic

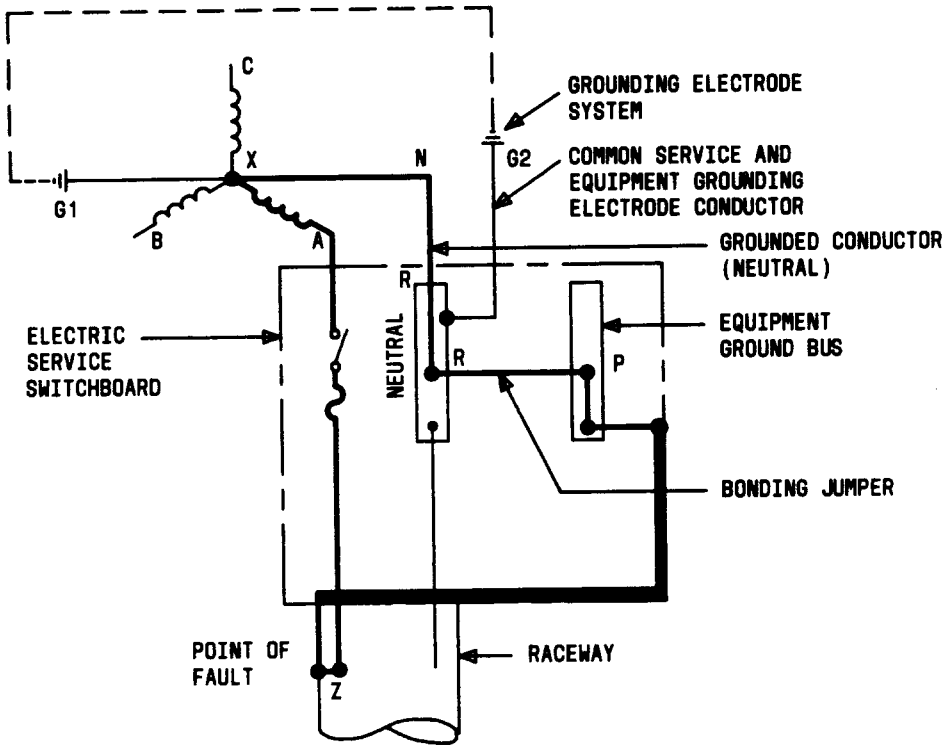

Fig. 2—Simplified Service and Equipment Grounding Schematic

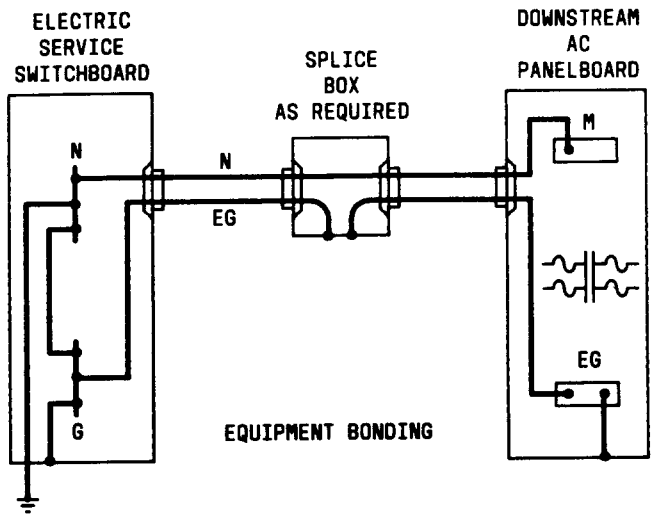

Fig. 3—Equipment Bonding

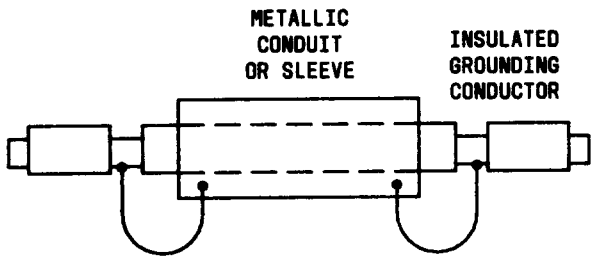

Fig. 4—Conduit Bonding