Lucent Technologies
Bell Labs Innovations

Installation and Switch Administration for the

DEFINITY® AUDIX® System Release 4.0

G3r switches

TN2181 emulation

Control Link Integration

585-300-122
Comcode 108473489
Issue 1
May 1999

Copyright © 1999, Lucent Technologies
All Rights Reserved, Printed in U.S.A.

Notice
Every effort was made to ensure that the information in this book was complete and accurate at the time of printing. However, information is subject to change.

Your Responsibility for Your System's Security
Toll fraud is the unauthorized use of your telecommunications system by an unauthorized party, for example, persons other than your company's employees, agents, subcontractors, or persons working on your company's behalf. Note that there may be a risk of toll fraud associated with your telecommunications system and, if toll fraud occurs, it can result in substantial additional charges for your telecommunications services.

You and your system manager are responsible for the security of your system, such as programming and configuring your equipment to prevent unauthorized use. The system manager is also responsible for reading all installation, instruction, and system administration documents provided with this product in order to fully understand the features that can introduce risk of toll fraud and the steps that can be taken to reduce that risk. Lucent Technologies does not warrant that this product is immune from or will prevent unauthorized use of common-carrier telecommunication services or facilities accessed through or connected to it. Lucent Technologies will not be responsible for any charges that result from such unauthorized use.

Lucent Technologies Fraud Intervention
If you suspect you are being victimized by toll fraud and you need technical support or assistance, call the appropriate BCS National Customer Care Center telephone number. Users of the MERLIN®, PARTNER®, and System 25 products should call 1 800 628 2888. Users of the System 75, System 85, DEFINITY® Generic 1, 2 and 3, and DEFINITY® ECS products should call 1 800 643 2353. Customers outside the continental United States should contact their local Lucent representative, or call one of the above numbers in the following manner:

- Dial the International Access Code; for example, 011.
- Dial the country code for the U.S., that is, 01.
- Lastly, dial either of the telephone numbers provided above.

Lucent Technologies Web Page
The world wide web home page for Lucent Technologies is:
http://www.lucent.com

Federal Communications Commission Statement
Part 15: Class A Statement. This equipment has been tested and found to comply with the limits for a Class A digital device, pursuant to Part 15 of the FCC Rules. These limits are designed to provide reasonable protection against harmful interference when the equipment is operated in a commercial environment. This equipment generates, uses, and can radiate radio-frequency energy and, if not installed and used in accordance with the instructions, may cause harmful interference to radio communications. Operation of this equipment in a residential area is likely to cause harmful interference, in which case the user will be required to correct the interference at his own expense.

Industry Canada (IC) Interference Information
This digital apparatus does not exceed the Class A limits for radio noise emissions set out in the radio interference regulations of Industry Canada.

Le Présent Appareil Nomérique n'émet pas de bruits radioélectriques dépassant les limites applicables aux appareils numériques de la class A préscrites dans le reglement sur le brouillage radioélectrique édicté par le Industrie Canada.

Trademarks
See the preface of this document.

Ordering Information
Call: Lucent Technologies BCS Publications Center
Voice 1 800 457-1235 International Voice 317 322-6791
Fax 1 800 457-1764 International Fax 317 322-6699
Write: Lucent Technologies BCS Publications Center
2855 N. Franklin Road
Indianapolis, IN 46219
Order: Document No. 585-300-122
Comcode 108473489
Issue 1, May 1999

For additional documents, refer to the section in "About This Document" entitled "Related Resources."

You can be placed on a standing order list for this and other documents you may need. For more information on standing orders, or to be put on a list to receive future issues of this document, contact the Lucent Technologies Publications Center.

Obtaining Products
To learn more about Lucent Technologies products and to order products, contact Lucent Direct, the direct-market organization of Lucent Technologies Business Communications Systems. Access their web site at www.lucentdirect.com. Or call the following numbers: customers 1 800 451 2100, account executives 1 888 778 1880 (voice) or 1 888 778 1881 (fax).

Warranty
Lucent Technologies provides a limited warranty on this product. Refer to the "Limited Use Software License Agreement" card provided with your package.

European Union Declaration of Conformity
The "CE" mark affixed to the equipment means that it conforms to the following directives. Lucent Technologies Business Communications Systems declares that DEFINITY AUDIX System equipment specified in this document conforms to the referenced European Union (EU) Directives and Harmonized Standards listed below:
EMC Directive 89/336/EEC
Low-Voltage Directive 73/23/EEC

Acknowledgment
This document was prepared by OMD Technical Publications, Lucent Technologies, Denver, CO. and Columbus, OH.

Contents

Contents iii

About This Document xiii

- Overview xiii
- Intended Audiences xiii
- Prerequisite Skills and Knowledge xiv
- Trademarks and Service Marks xiv
- Organization of This Document xiv
- How to Use This Document xvi
- Conventions Used in This Document xvi
- Related Resources xvii
- How to Get Help xviii
- How to Make Comments About This Document xviii

1 Prerequisites 1-1

- Display Set and Control-Link Integration 1-1

Task 3-1: Verify the Selected Site 1-2
Task 3-2: Gather the Required Tools 1-2
Task 3-3: Review Safety Considerations 1-3
Task 3-4: Verify the Components and Connectivity 1-3
Task 3-5: Complete the Worksheets 1-7

2 Hardware Installation 2-1

- Worksheets Needed 2-1

Task 4-1: Install the DEFINITY AUDIX System Assembly 2-2
Slot and Carrier Restrictions 2-4
DEFINITY AUDIX System Slots 2-4
Installation Steps 2-5
Task 4-2: Connect to the System Adaptor Cable 2-9
Alarm Origination/Remote Access Connection 2-9
LAN Connection 2-11
Port Connections for CL Integration 2-13

Task 4-3: Install the Terminals 2-13
3A: Installing a Terminal via Direct Connection 2-14
3B: Installing an Additional Administration Terminal via Modem 2-16
3C: Installing an Additional Administration Terminal via Asynchronous Data Units (ADUs) 2-19
3D: Installing an Additional Administration Terminal via 7400A Data Modules 2-21
Task 4-4: Install the Control-Link Cable 2-24
4A: Connect to the Packet Gateway Board via an IDI (G3r only) 2-24
4B: Connect to the TN577 via Data Set Units (DSUs) G3r Only 2-25
4C: Connect to the TN577 via 7400Ds (G3r Only) 2-26
Task 4-5: Install the Printer (Optional) 2-28
Task 4-6: Finalize and Test the Hardware 2-28

3 Definity AUDIX Option Administration 3-1

- Worksheets Needed 3-1
- Dual Administration on the 715 Terminal 3-1
- DEFINITY AUDIX Function Keys 3-2

Task 5-1: Activate Customer Options 3-3

4 Initial Switch Administration: G3r/R5r 4-1

- Worksheets Needed 4-1
- What You Must Know Before You Begin This Chapter 4-2
- Translation Overview Tables 4-2
- Administration Overview 4-4
  - Native Mode of the Switch 4-4
  - Digital Networking Availability 4-5
  - Summary of Integrations, Emulations, and Capacities 4-5
- TN2181 (Digital Port) Emulation, Control Link Integration 4-6

Task 6-1: Identifying the DEFINITY AUDIX Circuit Pack 4-6
Task 6-2: Assigning the User Defined Adjunct Names 4-10
Task 6-3: Creating the Hunt Group 4-11
Task 6-4: Defining the Call Coverage Path for Voice Ports 4-16
Task 6-5: Defining Call Coverage Paths for Subscribers 4-18

Task 6-6: Administering the Voice Ports as Stations 4-20
Rules for Administering the Voice Ports 4-21
6A: Completing the Station Screen 4-21
6B: Assigning the Call Appearance Buttons 4-30
6C: Assigning the Feature Buttons 4-33
6D: Assigning the Display Buttons 4-33
6E: Duplicating the Stations 4-34
Task 6-7: Assigning Voice Ports to the Hunt Group 4-35
Task 6-8: Administering the Digital Networking Port (Optional) 4-37
Task 6-9: Assigning the Data Link 4-39
9A: Assigning the PGATE Board 4-39
9B: Assigning the X.25 Data Module 4-41
9C: Assigning the Interface Link 4-47
9D: Assigning the Processor Channel 4-48

5 Initial Definity AUDIX Administration 5-1

- Worksheets Needed 5-1

Task 7-1: Perform Initial DEFINITY AUDIX Administration 5-2
1A: Set the DEFINITY AUDIX Clock 5-2
1B: Assign the Time Zone 5-5
1C: Assign the DEFINITY AUDIX Machine Parameters 5-6
1D: Run the Switch Translations Audit 5-8
1E: Administer Voice Ports 5-9
1F: Set Switch-Link Parameters 5-10
1G: Set System Parameters Limits 5-12
1H: Set System Parameters for INTUITY Message Manager 5-13
1I: Reboot the DEFINITY AUDIX System 5-14
Task 7-2: Activate Parameters and Basic Features 5-16
Task 7-3: Add Magneto-Optical Disks 5-18
Task 7-4: Verify the Link 5-20
Task 7-5: Check Alarm Status 5-21

6 Optional Switch Feature Administration 6-1

- Worksheets Needed 6-2
- Automated Attendant Administration 6-2

Generic 3, Version 2 and Greater Switches 6-2
Assigning a Phantom Station 6-2
Assigning a Hunt Group 6-3

Night Service to an Automated Attendant 6-3
From an Incoming Trunk 6-4
From a Listed Directory Number (LDN) 6-4
- Automated Attendant Substitute Strategies 6-5
Generic 3, Release 5, and Newer Switches 6-5
- Transfer into AUDIX 6-5
- Switch Recorded Announcement 6-6
- Switch Multiple Coverage Paths 6-8
- Listed Directory Number (LDN) Night Destination 6-8
- Expert Agent Selection (EAS) 6-8
Verify the Call Center Optional Features 6-9
Activate EAS on the System-Parameters Features screen 6-10
Activate EAS on the DEFINITY AUDIX Hunt Group 6-11
Assign each Voice Port to an Agent Login ID 6-14
Build a Vector to the DEFINITY AUDIX Hunt Group 6-16
- Continue with the Installation 6-18

7 Joint Acceptance Testing 7-1

- Acceptance Check Tasks 7-1
- Worksheets Needed 7-1
Task 9-1: Add Two Test Subscribers 7-2
Task 9-2: Test the Call Answer and Voice Mail Features 7-3
Task 9-3: Run Test MO-Disk 7-4
Task 9-4: Test The Local Area Network 7-6
Task 9-5: Clear Administration, Error, and Alarm Logs 7-8

8 Initial Subscriber Administration 8-1

- Initial Subscriber Administration Tasks 8-1
- Worksheets Needed 8-1
Task 10-1: Optimize the Class of Service (COS) Values 8-1
Task 10-2: Add the Initial Subscribers 8-3
Task 10-3: Complete Initial Administration 8-5

9 Final Switch Administration: G3r/R5r 9-1

Task 11-1: Modifying the Station Screen for Each Subscriber 9-1
Task 11-2: DCS Administration — Optional 9-2
2A: Assigning the Adjunct Names at the Remote Switch 9-3
2B: Administering DCS with X.25 Signaling 9-5
2C: Administering DCS Via ISDN-PRI D-Channel 9-13
2D: Assigning the Hunt Group at the Remote Switch 9-27
2E: Testing the DCS Network 9-31
Task 11-3: Administering the Subscribers on the Remote Switch 9-33
3A: Assigning the Call Coverage Path for Subscribers (Remote Switch) 9-33
3B: Modifying the Station Screen for Each Remote Subscriber 9-35

10 Customer Acceptance 10-1

Task 12-1: Alarm Origination Administration Test and Status MO Disk 10-1
Task 12-2: Perform a Walk Through 10-5
Task 12-3: Demonstrate Updated Customer Database 10-5
Task 12-4: Project Review 10-5

A Switch Carrier Configuration Worksheets A-1

Worksheet A-1: Port Slot Assignments (Before Carrier Rearrangement) A-2
Worksheet A-2: Port Slot Assignments (For Carrier Rearrangement) A-4
Worksheet A-3: Slot Locations for the DEFINITY AUDIX System Assembly A-5
Worksheet A-4: Control Link Cable-Connection Configuration A-6

B Switch Administration Worksheets B-1

Worksheet B-1: Administer the Voice Ports as Stations (Digital Port Emulation) B-3
Worksheet B-2: Assign the Hunt Group (Digital Port Emulation) B-6
Worksheet B-3: Assign the Call Coverage Path for Voice Ports (Digital Port Emulation) B-9
Worksheet B-4: Assign the Call Coverage Path for Subscribers (Digital Port Emulation) B-10
Worksheet B-5: Administer the Voice Ports as Stations (Analog Port Emulation) B-11
Worksheet B-6: Define the Hunt Group (Analog Port Emulation) B-13
Worksheet B-7: Assign the Hunt Group (Analog Port Emulation) B-14
Worksheet B-8a: Assign the Data Link (Control Link Integration for G3r Switches) B-16

- DCS Worksheets B-19

Worksheet B-9a: Processor Channel Assignment — BX.25 Signaling for Remote G3r switches (Control Link Integration, DCS Environment) B-20
Worksheet B-10: Hop Channel Assignment BX.25 Signaling for the Host (Control Link Integration, DCS Environment) B-21
Worksheet B-11: Assign the Remote Switch Hunt Group — BX.25 Signaling (Control Link Integration, DCS Environment) B-22
Worksheet B-12: Assign the Call Coverage Path for Remote Switch — BX.25 Signaling (Control Link Integration, DCS Environment) B-24
Worksheet B-13a: Processor Channel Assignment for a G3r Host ISDN Gateway (Control Link Integration, DCS Environment) B-25
Worksheet B-14: ISDN Signaling Group for the Host (Control Link Integration, DCS Environment) B-26
Worksheet B-14a: ISDN Signaling Group for a Remote Switch (Control Link Integration, DCS Environment) B-28
Worksheet B-15: ISDN RSC Gateway Channel Assignment for the Host (Control Link Integration, DCS Environment) B-30
Worksheet B-16: Administer Digital Networking Ports (Digital Port Emulation) B-31

■ DCP Mode 2 Planning Worksheets B-32
Worksheet B-17: Administer a 7400A Data Module and ADU (Digital Port Emulation, Digital Networking) B-32
Worksheet B-18: Administer a 7400A Data Module and/or ADU – DCP Mode 2 B-33
Worksheet B-19: Administer a Modem – Digital Networking B-35

C DEFINITY AUDIX System Administration Worksheets C-1

Worksheet C-1: Activate Customer Options C-2
Worksheet C-2: Activate IMAPI for the AUDIX Server Hardware (LAN) Options C-3
Worksheet C-3: Assign the DEFINITY AUDIX Machine ID C-4
Worksheet C-4: Assign Switch Link Translations (Control Link Integration) C-5
Worksheet C-5: Set System Parameters Limits C-6
Worksheet C-6: Assign the Time Zone C-7
Worksheet C-7: Activate Parameters and Basic Features C-7
Worksheet C-8: Add Subscribers C-10
Worksheet C-9: Set Up Alarm Origination C-13

D Optional Features Worksheets D-1

Worksheet D-1: Administering AMIS Analog Networking and Message Delivery D-1
Worksheet D-2: Automated Attendant D-5
Worksheet D-3: Administering a Bulletin Board D-8
Worksheet D-4: Administering Outcalling D-9
Worksheet D-5: Administering Switch Recorded Announcement D-10

E Terminal Configuration E-1

Worksheet E-1: Terminals E-1

F **Migration Procedure** **F-1**

- Materials and Information Needed F-2
- Migration Checklist F-3

Task F-1: Shut Down the DEFINITY AUDIX System F-3
Task F-2: Export the Switch Voice Ports F-4
Task F-3: Remove the Voice Ports from the Hunt Group F-5
Task F-4: Connect the External Tandberg Tape Drive F-6
Task F-5: Back-Up the DEFINITY AUDIX Data F-7
Task F-6: Remove the Existing DEFINITY AUDIX System F-12
Task F-7: Install DEFINITY AUDIX 4.0 F-13
Task F-8: Restore the Existing Data F-17
Task F-9: Remove the Tape Drive F-20
Task F-10: Verify the DEFINITY AUDIX Administration F-20
10A: Display Customer Options F-20
10B: Verify the Voice Port Configuration F-22
10C: Verify the Subscribers F-23
Task F-11: Administer Changes to the Switch F-23
11A: Determine the Number of Voice Ports F-23
11B: Administer the Voice Port Station Screen F-24
11C: Add Voice Ports Back to the Hunt Group F-27
Task F-12: Complete Additional Migration Tasks F-29

G **Announcement Set Considerations and Installation** **G-1**

- Customized Announcement and Fragments G-1
  - Customer Modified and Added Fragments G-1
  - Announcement Set Identifiers G-1
- Installing Additional Language Sets G-3

H **Terminal and Modem Settings** **H-1**

- Terminal Option Settings H-1
- Modem Option Settings (for Port C Modems) H-5
  - US Robotics Sportster 33.6 H-5
  - Paradyne Comsphere Models 3810 and 3820 H-6
  - Paradyne Comsphere Model 3910 H-6
  - Generic Modems H-7

7400A Data Module Settings H-10
7400B Data Module Settings H-10
- MPDM Option Settings H-11
  7400D Data Module Settings H-11

I Changing Switch Integrations, Port Emulations, and Number of Voice Ports I-1

- Changing from Analog to Digital Port Emulation I-1
  Verifying the Emulation and Integration Types I-1
  Verifying the DEFINITY AUDIX TN568 Circuit Pack I-2
  Administering the Voice Ports I-2
  Changing the Hunt Group I-2
  Adding the Voice Port Coverage Path I-2
- Changing from CL Integration — Analog to DS Integration — Digital I-3
  Verifying the Emulation and Integration Types I-3
  Removing Voice Ports I-4
    Verifying the Port IDs of the Voice Ports I-4
    Removing Existing Voice Ports I-5
  Verifying the Circuit Pack I-6
  Administering the Voice Ports I-7
  Changing the Hunt Group I-7
  Adding the Voice Port Coverage Path I-7
  Changing Subscriber Stations I-8
  Disabling the Data Link I-8
- Changing from DS Integration — Digital to CL Integration — Digital I-8
  Turning Off Message Waiting Indicators I-8
  Verifying the Emulation and Integration Types I-9
  Verifying the Circuit Pack I-10
  Assigning User Defined Adjunct Names (G3r Only) I-10
  Re-administering the Voice Ports I-10
  Changing the Hunt Group I-11
  Assigning the Data Link I-11
  Changing Subscriber Stations I-11
  Checking the Switch Link I-12

- Decreasing the Number of Digital Voice Ports from 12 to 8 I-12
  - Changing the Voice Group Screen on the DEFINITY AUDIX System I-12
  - Verifying DEFINITY AUDIX Customer Options I-13
  - Add a Networking Port I-13
  - Removing Ports from the Hunt Group I-13
  - Removing Voice Ports I-16

J Analog Port Administration J-1

- G3r/R5r J-2

Task J-1: Identifying the Circuit Pack — Analog Emulation J-2
Task J-2: Assigning the User Defined Adjunct Names J-3
Task J-3: Administering the Voice Ports as Stations J-3
3A: Completing the Station Screen J-4
3B: Duplicating the Station J-7
Task J-4: Assigning the Hunt Group J-7

AB Abbreviations AB-1

GL Glossary GL-1

IN Index IN-1

About This Document

Overview

This document describes the following procedures:

- Installation of DEFINITY® AUDIX® Voice Messaging System release 4, version 0 (4.0)
- Administration of a DEFINITY switch to make DEFINITY AUDIX service available
- Initial administration of DEFINITY AUDIX
- Acceptance testing procedures for the hardware and software comprising the DEFINITY AUDIX system.
- Procedures for migrating from a previous release of DEFINITY AUDIX to release 4.0.

The procedures are described in the form of specific tasks that should be completed in sequence.

Intended Audiences

This document is intended for the following audiences:

- Personnel responsible for installing the DEFINITY AUDIX System hardware
- Software Specialists (SS), Software Associates (SA), and other personnel (such as factory personnel and customers) responsible for performing initial administration of DEFINITY AUDIX and cut-to-service procedures
- Lucent Technologies customers who must administer a switch to work with the DEFINITY AUDIX system
- Lucent Technologies and Lucent-certified service personnel who must administer and maintain a DEFINITY AUDIX system and the switch that supports it
- Field support and the remote service center personnel

Prerequisite Skills and Knowledge

The information in this document assumes no prerequisite training. However, DEFINITY AUDIX system installation or upgrade training is recommended. To install this product, an installer should have basic knowledge of the switch, DEFINITY AUDIX, fault isolation, the customer's application, and toll fraud protection.

Trademarks and Service Marks

The following trademarks are mentioned throughout this document:

Product Name	Company
AT™	Trademark of Hayes Microcomputer Products, Inc.
AUDIX®	Registered trademark of Lucent Technologies
DEFINITY®	Registered trademark of Lucent Technologies
INTUITY™	Registered trademark of Lucent Technologies
ProLogix™	Registered trademark of Lucent Technologies
U.S. Robotics®	Registered trademark of 3Com Corporation
Sportster®	Registered trademark of 3Com Corporation

Organization of This Document

This document is organized as follows:

- Chapter 1, "Prerequisites", identifies site requirements, required tools, safety considerations, and supported configurations.
- Chapter 2, "Hardware Installation", describes the tasks required for installing the DEFINITY AUDIX system hardware and the associated peripherals.
- Chapter 3, "Definity AUDIX Option Administration" describes the initial setup of customer and server options on the DEFINITY AUDIX system.
- Chapter 4, "Initial Switch Administration: G3r/R5r", describes the initial tasks required to administer the Definity Audix voice ports on the switch.
- Chapter 6, "Optional Switch Feature Administration", describes the tasks required to administer optional Definity Audix features on the switch.
- Chapter 5, "Initial Definity AUDIX Administration", describes the tasks required for initial administration of the DEFINITY AUDIX system.
- Chapter 7, "Joint Acceptance Testing", describes the tasks required to verify the DEFINITY AUDIX system installation and operation.

- Chapter 8, "Initial Subscriber Administration", describes how to add the initial set of subscribers to the DEFINITY AUDIX system database.
- Chapter 9, "Final Switch Administration: G3r/R5r", describes the tasks required to add the initial set of DEFINITY AUDIX subscribers to the switch.
- Chapter 10, "Customer Acceptance", describes the tasks that the Project Manager should complete with the customer to ensure the DEFINITY AUDIX system is fully functional.
- Appendix A, "Switch Carrier Configuration Worksheets" includes the worksheets for selecting the appropriate slots for the DEFINITY AUDIX system within any allowed switch carrier.
- Appendix B, "Switch Administration Worksheets" includes the worksheets required to complete the initial switch administration.
- Appendix C, "DEFINITY AUDIX System Administration Worksheets" includes the worksheets for completing the initial DEFINITY AUDIX administration.
- Appendix D, "Optional Features Worksheets" includes the worksheets for administering optional features on the DEFINITY AUDIX system.
- Appendix E, "Terminal Configuration" includes the worksheet for configuring the DEFINITY AUDIX administration terminal.
- Appendix F, "Migration Procedure" describes the procedure for migrating from a previous version of DEFINITY AUDIX to version 4.0.
- Appendix G, "Announcement Set Considerations and Installation", describes how to customize announcement and fragment sets, and add new language sets.
- Appendix H, "Terminal and Modem Settings", contains a list of option settings for supported terminals and modems. However, this appendix does not provide procedures for setting the options. Refer to the appropriate manual supplied with the terminal and modem for these procedures.
- Appendix I, "Changing Switch Integrations, Port Emulations, and Number of Voice Ports", describes the tasks required to change several configuration parameters of the switch administration of the Definity Audix system.
- Appendix J, "Assigning the G3r/R5r Data Link Over 400 Feet", describes an alternative procedure for installing a data link if the distance between the switch and the Definity Audix system in a remote module is over 400 feet.
- Appendix K, "G2/System 85 as a Remote Switch in a DCS", describes the procedure for administering a G2 or System 85 as a remote switch in a DCS environment using the Definity Audix system on a host switch.
- Appendix J, "Analog Port Administration", describes the tasks required to administer analog port emulation.

A list of abbreviations, a glossary, and an index are also provided.

How to Use This Document

Those who install and upgrade hardware and software on DEFINITY AUDIX systems should reference the tasks within the entire document, including the appendices. Appendix A through Appendix E include worksheets that must be completed before starting the installation.

Field Support, Remote Service Center (TSC, ITAC, CDEs, and distributors), and factory personnel should read the entire document to gain a thorough overview of the DEFINITY AUDIX system installation procedures.

Conventions Used in This Document

The following typographic conventions are used in this document:

- Keyboard keys that you press are shown in rounded boxes. For example, an instruction to press the carriage return or equivalent key is shown in this document as:

  Press ENTER.

- The word *enter* means to type a value or command and then press the ENTER key. For example, an instruction to type **y** and press ENTER is shown in this document as:

  Enter **y** to continue.

  NOTE:
  To send the information to the DEFINITY AUDIX system, the RETURN key (located on the right side of your keyboard) must be pressed after you type a command or a response to a prompt. On some keyboards, this key is labeled ENTER instead of RETURN.

  If your keyboard has *both* a RETURN key and an ENTER key (as on the 513 and 615 keyboards), use the RETURN key.

- Two or three keys that you press at the same time (that is, you hold down the first key while pressing the second key and, if appropriate, the third key as well) are shown in rounded boxes separated by hyphens. For example, an instruction to press and hold CONTROL while typing the letter **d** is shown in this document as:

  Press CONTROL -D.

- Information that is displayed on your terminal screen — including screen displays, field names, prompts, and error messages — is shown in typewriter-style constant-width type. Information that you enter from your keyboard is shown in constant-width bold type. Here is an example:

At the login: prompt, enter **`audix`**

- Variables whose values are supplied by you or the system are shown in italic type. For example, an error message that is displayed on the screen with one of your specific filenames might be shown generically in this document as:

  The filesystem *filename* is out of space.

Related Resources

Refer to the Lucent Technologies Business Communications Systems Publications Catalog on the World Wide Web at the following address for a current list of DEFINITY AUDIX and switch documentation:

http://www.lucent.com/enterprise/documentation/

The following documents are related to DEFINITY AUDIX system installation and upgrades.

- For all DEFINITY AUDIX system planning information, see *Planning for DEFINITY AUDIX System*, 585-300-602.
- For complete instructions on administering Digital Networking, see *DEFINITY AUDIX System — Digital Networking*, 585-300-534.
- For information about earlier versions of the system, see *DEFINITY AUDIX System — Documentation Guide*, 585-300-011. This book lists currently available editions of books covering the earlier systems as well as version 4.0.
- For complete details on ongoing administration of a DEFINITY AUDIX system, see *DEFINITY AUDIX System — Administration*, 585-300-507.
- For complete details on the DEFINITY AUDIX system, see *DEFINITY AUDIX System — System Description*, 585-300-214.
- For all maintenance procedures, see *DEFINITY AUDIX System — Maintenance*, 585-300-121.
- For installation and operation information on the G3-MA (SAT-PC), see *DEFINITY Communications System Generic 3 Management Applications Station Provisioning*, 555-229-202.
- For installation and operation information on INTUITY Message Manager, see *INTUITY Message Manager User Guide*, 585-310-725.

To order additional Lucent Technologies documents from within the USA, call the Lucent Technologies Customer Information Center, 1-800-432-6600, and request each item by the appropriate document number.

How to Get Help

If problems arise during installation of the DEFINITY AUDIX System that cannot be resolved locally, call the appropriate remote service center. The number will be provided to you by the Project Manager overseeing this installation.

How to Make Comments About This Document

The reader comment card is located after the title page. While we have tried to make this document fit your needs, we are interested in your suggestions for improving it and urge you to fill one out.

If the reader comment card has been removed from this document, please send your comments to:

Lucent Technologies
Product Documentation
Room 22-2X57
11900 North Pecos Street
Denver, Colorado 80234

Send e-mail comments to:

octeltechpubs@lucent.com

Prerequisites

1

This chapter describes prerequisites for installing a DEFINITY AUDIX system. These include:

Task 1-1 - "Verify the Selected Site".

Task 1-2 - "Gather the Required Tools"

Task 1-3 - "Review Safety Considerations"

Task 1-4 - "Verify the Components and Connectivity"

Task 1-5 - "Complete the Worksheets"

Before beginning the installation, make sure you complete these prerequisites.

NOTE:
If this Installation or Migration includes Digital Networking, ensure that the Installation Specification is completed and available.

NOTE:
The installation of INTUITY™ Message Manager requires that the following information be obtained from the LAN Administrator. This information is required for administration of the DEFINITY AUDIX Server:

Gateway Address
Subnet Mask
IP Address
Link Integrity of the LAN

Display Set and Control-Link Integration

The Definity Audix system can be connected to the switch in one of two ways: display set (DS) or control-link (CL) integration. CL integration requires an external connection from the switch to an RS-232C port (Port B) on the TN568

circuit card of the Definity Audix system. DS integration uses a channel internal to the switch that would otherwise be used to transfer display-set information. You need to know which integration type - DS or CL - to set up for this installation. If you do not know the integration, contact the project manager or the remote support center before proceeding.

Task 1-1: Verify the Selected Site

Defining and ensuring that the site meets the DEFINITY AUDIX system requirements is the responsibility of the Project Manager and the customer, and must be *completed before* you install the DEFINITY AUDIX system. The guidelines are listed here so that you are aware of these requirements.

Verify that the site selected for the switch and the DEFINITY AUDIX system provides the following:

- For a DEFINITY AUDIX system installed in an existing switch, two contiguous slots in a switch carrier to house the DEFINITY AUDIX system. If your switch carrier is a CMC however, the system only requires one slot if you install it in slot 6. (see Appendix A for details on configuring the port slots on the switch.)
- Easy access for cabling
- Adequate work space for the system administrator and operators
- A temperature range of 65° F to 85° F (18° C to 29° C)
- A humidity range of 20 to 60%, non-condensing.
- The site must be secure and provide protection from excessive sunlight, heat, cold, chemicals, static electricity, magnetic fields, vibration, and particulate matter.

Task 1-2: Gather the Required Tools

To install an DEFINITY AUDIX system, you must have the following tools:

- No. 1 or No. 2 Phillips screwdriver
- Narrow width, flat blade screwdriver
- 1/4-inch nut driver (recommended)
- Antistatic grounded wrist strap

Task 1-3: Review Safety Considerations

WARNING:
Electronic equipment can be damaged by electrostatic discharge. Observe proper electrostatic discharge precautions when handling computer components, in particular, circuit cards, disk drives, and the system board. Wear a ground wrist strap on your bare skin and connect the strap to ground.

DANGER:
Do not touch the switch backplane while installing the DEFINITY AUDIX system. The backplane contains dangerous voltages and currents.

To prevent damage to the equipment and yourself, adhere to the following:

- Make sure you are familiar with the procedures necessary to prevent electrostatic damage to the equipment.
- Properly ground a wrist strap.
- Place the grounded wrist strap on your bare wrist. The wrist strap must contact your bare skin directly. Do *not* wear it over your clothes.
- Do not remove the DEFINITY AUDIX system assembly from the polyethylene bag until:
  - — Your wrist strap is on your wrist and properly grounded.
  - — You have made room in the switch carrier and you are ready to insert the DEFINITY AUDIX System assembly in the carrier.
- If you need to work on the DEFINITY AUDIX System assembly — that is, disassemble it — place the assembly on a grounded antistatic work mat.

Task 1-4: Verify the Components and Connectivity

Review the connectivity diagrams in Figure 1-1 and Figure 1-2 to gain a general understanding of how to connect the DEFINITY AUDIX system. With CL integration, Port B must be used to connect the DEFINITY AUDIX system to the switch.

In these drawings, optional connection methods are shown in braces. The optional connections are illustrated in diagrams presented later in the chapter. Refer to these diagrams for details on the various connections.

Compare the diagrams corresponding to your particular application with the actual parts you received to make sure you have all the required parts. In

addition to the components illustrated in the diagrams, you can connect most terminals, modems, and printers.

If you do not have all the required parts, follow your normal procedure with the factory to acquire the missing parts. After you have reviewed the connectivity diagram and have verified the DEFINITY AUDIX system components, proceed to the tasks in Chapter 2, "Hardware Installation".

NOTE:
If DEFINITY AUDIX will be used as a server for local area network (LAN) applications such as INTUITY Message Manager, we recommend that you install the LAN connecting block (see "Alarm Connection Via an External Modem" on page 2-10) before installing DEFINITY AUDIX.

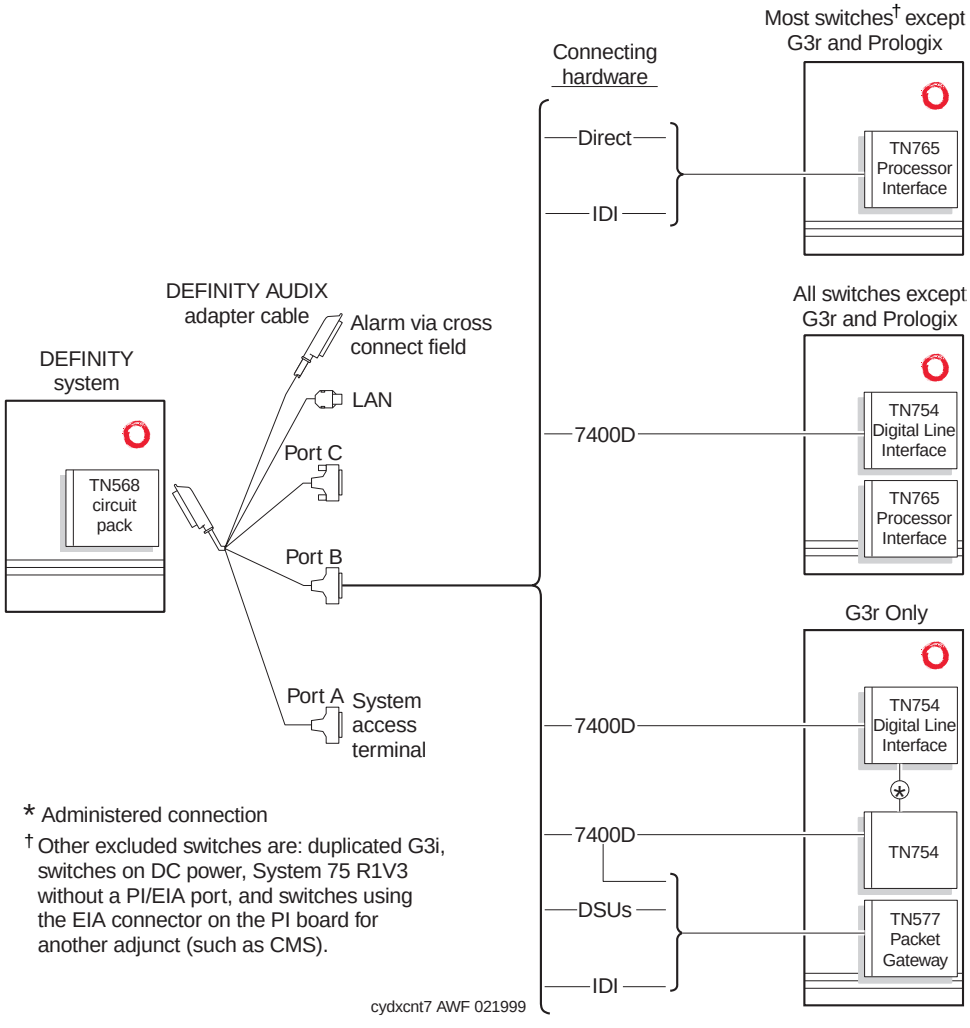

Figure 1-1. DEFINITY AUDIX System Connectivity Diagram - CL Integration

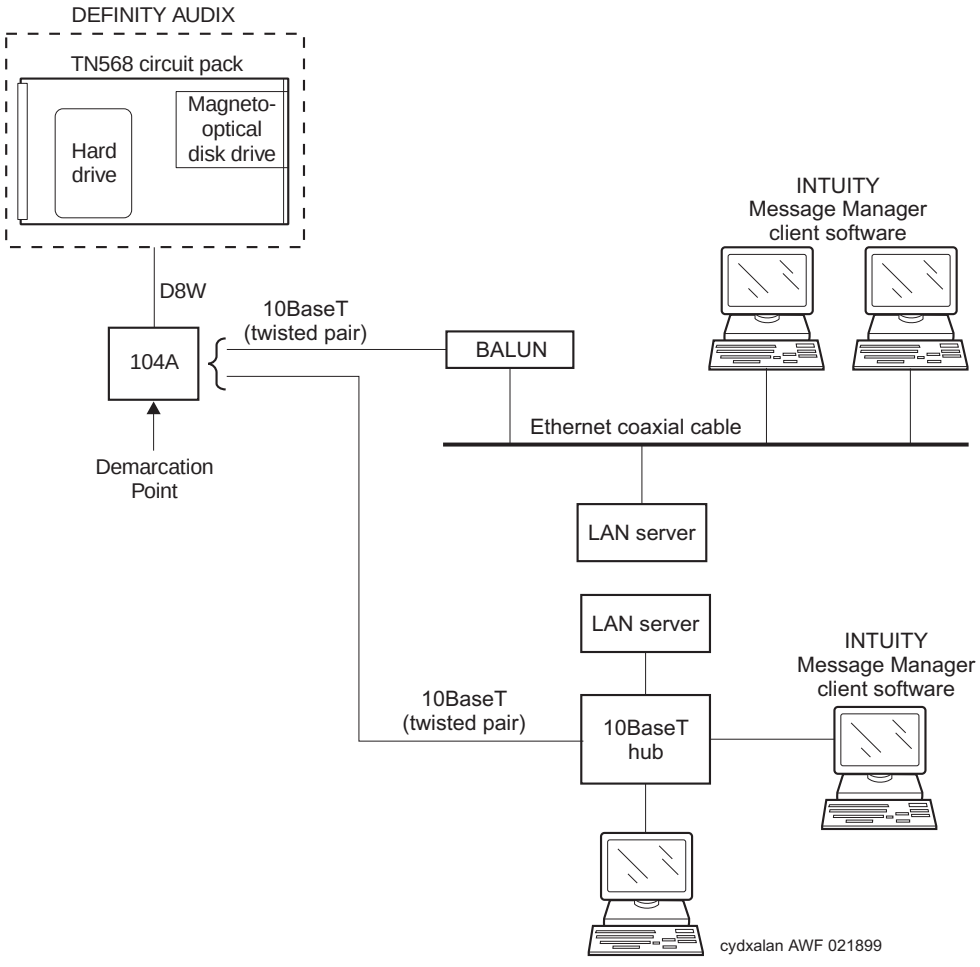

Figure 1-2. DEFINITY AUDIX LAN Connectivity

NOTE:
If DEFINITY AUDIX is to be used as a server for LAN applications such as INTUITY Message Manager, Lucent must install a connecting block for the LAN within 25 feet of the switch. The customer is responsible for the connection between the LAN and the connecting block.

Figure 1-2 shows two possible ways of connecting the DEFINITY AUDIX system to a LAN. For both choices, the RJ45 connector on the system adaptor cable connects to a 10BaseT LAN system. Further details are provided in "LAN Connection" on page 2-10.

Task 1-5: Complete the Worksheets

Before starting the installation process, the Program Manager, Software Specialist, Software Associate, or installing technician must complete the relevant worksheets in Appendix A through Appendix E. These worksheets include installation variables that are critical to the success of this process.

1 Prerequisites
Complete the Worksheets *1-8*

Hardware Installation

2

This chapter describes the tasks required to install the DEFINITY AUDIX system and peripheral hardware.

You can install the DEFINITY AUDIX system in any of the following switches.

- G3r [V1-V4, R5 or greater]

The DEFINITY AUDIX system installation tasks are virtually the same for all switch types. Therefore only one set of tasks is provided. These installation tasks include:

Task 2-1 - "Install the DEFINITY AUDIX System Assembly"

Task 2-2 - "Connect to the System Adaptor Cable"

Task 2-3 - "Install the Terminals"

Task 2-4 - "Install the Control-Link Cable"

Task 2-5 - "Install the Printer (Optional)"

Task 2-6 - "Finalize and Test the Hardware"

Worksheets Needed

Before beginning these tasks, make sure you have the completed the following worksheets.

- Worksheet A-1: Port Slot Assignments (Before Carrier Rearrangement)
- Worksheet A-2: Port Slot Assignments (For Carrier Rearrangement)
- Worksheet A-3: Slot Locations for the DEFINITY AUDIX System Assembly
- Worksheet C-2: Activate IMAPI for the AUDIX Server Hardware (LAN) Options
- Worksheet C-9: Set Up Alarm Origination

- Worksheet E-1: Terminals

NOTE:
The worksheets are included in appendices A-E. Refer to the appendix corresponding to the worksheet letter. For example, worksheet A-1 is in appendix A, worksheet C-10 is in appendix C, etc.

Task 2-1: Install the DEFINITY AUDIX System Assembly

WARNING:
To prevent damage to the DEFINITY AUDIX system assembly, make sure that you have connected the DEFINITY AUDIX system assembly adapter cable to the port connector on the back of the switch (as described in Step 4 of the installation steps below) before you insert the DEFINITY AUDIX system assembly in the switch carrier.

NOTE:
If you are installing the system in a new switch purchased with Definity Audix, the adaptor cables will already be installed.

WARNING:
You can install the DEFINITY AUDIX system assembly in the switch when the switch is powered either on or off. When the assembly is inserted in the switch carrier, it automatically powers up, runs diagnostics, and boots. To avoid a hard disk crash, never remove the assembly without first completing the procedure to shut down the DEFINITY AUDIX system and allowing the hard disk to completely spin down.

For the same reason, do not power cycle the switch (for example, during switch acceptance tests) once the DEFINITY AUDIX system assembly is inserted until you have shut down the DEFINITY AUDIX system. Refer to Chapter 1 in DEFINITY AUDIX System — Maintenance, 585-300-121, for the shutdown procedure.

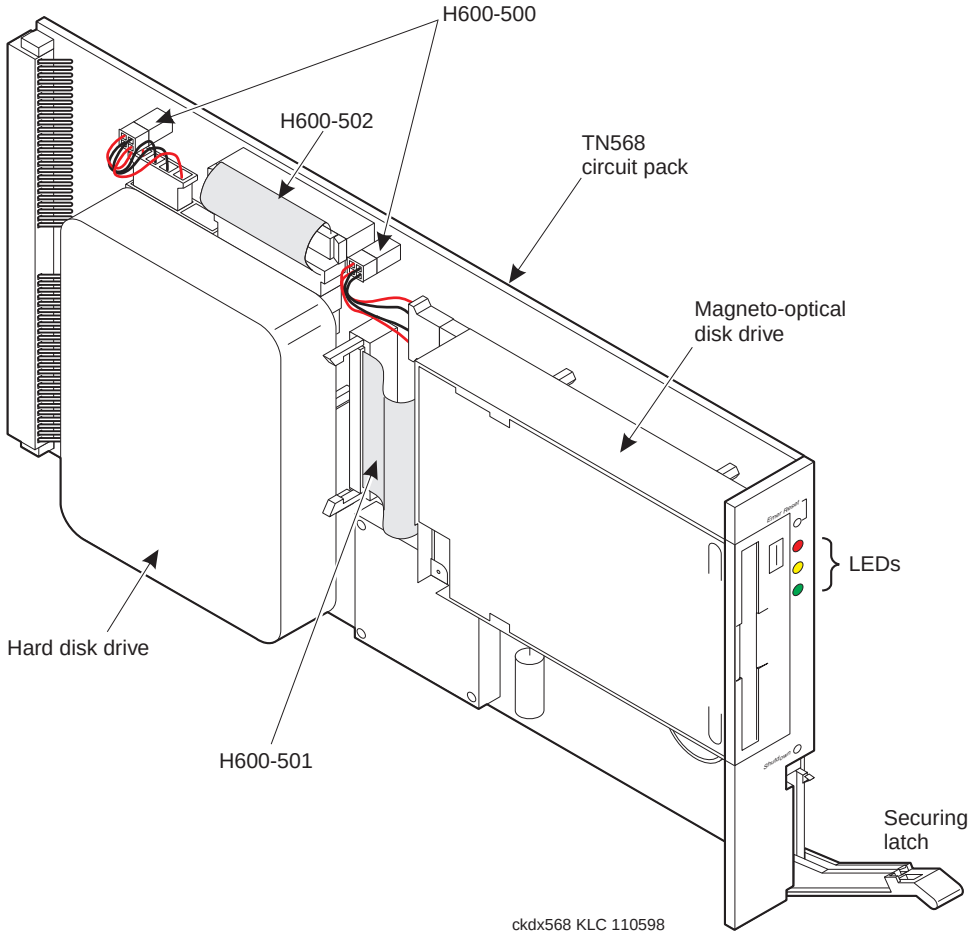

Figure 2-1. DEFINITY AUDIX System Assembly

Slot and Carrier Restrictions

If you must rearrange circuit packs in the switch to accommodate the DEFINITY AUDIX system assembly, rearrange the packs as indicated on Worksheet A-2 before proceeding.

Do not use slot 14 (or slot 13 in an EPN control cabinet) for the DEFINITY AUDIX system if you are installing the system in a System 75 XE or in a single-carrier cabinet of a DEFINITY G1, G3i, G3r, or G3s.

See the worksheets in Appendix A, "Switch Carrier Configuration Worksheets", for detailed information on rearranging circuit packs and on slot restrictions.

DEFINITY AUDIX System Slots

The DEFINITY AUDIX system assembly requires two contiguous port slots in the switch carrier. In this task, the two slots are referred to as the first and second slot, with the understanding that they can be any two contiguous port slots.

The slots are numbered from left to right on the front panel of the switch cabinet, and from right to left on the rear panel, as shown in Figure 2-2. Facing the front panel, the two port slots are occupied by the DEFINITY AUDIX system assembly as follows:

- The first (left) slot is occupied by the DEFINITY AUDIX hard disk drive and magneto-optical (MO) disk drive and does not connect to the backplane of the switch.
- The second (right) slot connects the DEFINITY AUDIX TN568 circuit pack to the backplane of the switch. This is the slot you will connect to the adaptor cable.

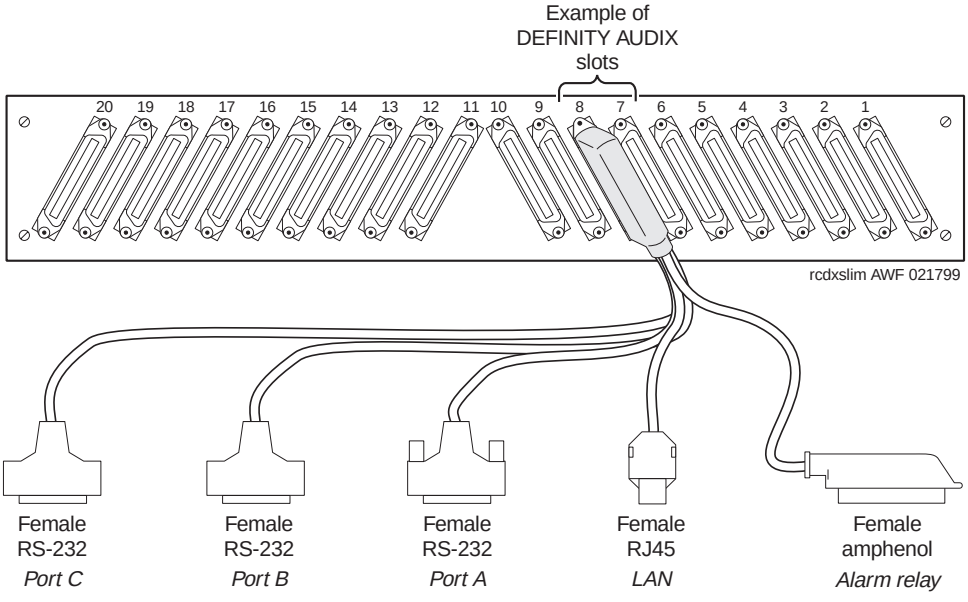

Figure 2-2. Connecting the Adapter Cable, Rear-Panel View

If the DEFINITY AUDIX system was shipped in a new switch, verify that the adapter cable is installed. If so, skip to Step 7 of this task.

NOTE:
If Definity Audix is already installed in the switch, the system will boot up when the switch is turned on.

Installation Steps

Using Worksheet A-3, follow the steps below to install the DEFINITY AUDIX system assembly.

1. Wear a ground wrist strap on your bare skin and connect to a ground when handling circuit cards, disk drives, and the system board. Refer to Task 1-3 for complete instructions.
2. Remove the amphenol connector, if any, from the second slot of the two contiguous slots reserved for the DEFINITY AUDIX system. For example, if you install the DEFINITY AUDIX system in slots 7 and 8 of carrier A in the switch, remove the amphenol connector on the Group 300 cables from slot 8. This slot provides connectivity to the DEFINITY AUDIX system circuit pack.
3. Dress down the cable you removed.

4. Referring to Figure 2-2, attach the male D-type amphenol connector of the DEFINITY AUDIX system adapter cable to the circuit card slot, that is, the second slot of the two DEFINITY AUDIX system slots.

   CAUTION:
   You must connect the adaptor cable directly to the port connector on the switch. If you install another cable between the switch and the cables, the DEFINITY AUDIX system will not operate correctly.

   If you are installing the DEFINITY AUDIX system in a DC-powered switch, perform Step 5 to install the opto-isolators. Refer to Figure 2-7 for details. Otherwise, skip to Step 6.

5. Install the 116A opto-isolators.

   a. Attach the male end of a null modem cable (supplied with the DEFINITY AUDIX system) to the RS-232C connector labeled PORT A. Attach the male connector of the 116A opto-isolator to the other end of the null modem cable.

6. Insert the DEFINITY AUDIX system assembly (see Figure 2-1) into the switch cabinet. To do so, hold the DEFINITY AUDIX system assembly by the outside edge of the faceplate and line up the TN568 circuit pack with the bottom guide of the second slot of the two reserved port slots in the switch carrier. Make sure that the assembly is properly aligned in the slot, then insert it with a single firm push, and lock it in place by pushing up the securing latch on the circuit pack.

   WARNING:
   If the switch is powered on, the DEFINITY AUDIX system automatically boots up when seated in the slot. Damage to the hard disk could occur if the assembly is removed while booting. Therefore, do not adjust or reinsert the assembly.

   If the switch is not powered on, wait until it is and then proceed to Step 7.

7. As the DEFINITY AUDIX system boots up, watch the three LEDs on the faceplate (see Figure 2-3).

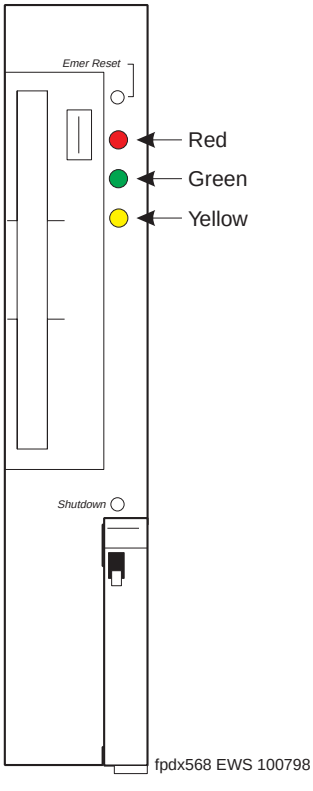

Figure 2-3. DEFINITY AUDIX System LED Display

The combined states of the LEDs listed in Table 2-1 indicate the current status of the system, including minor and major alarms. When the DEFINITY AUDIX SYSTEM boots up, the LED states should match the boot up sequence shown in the following table:

Table 2-1. LED States During Normal Boot Up Sequence

Red (failure)	Green (maintenance)	Yellow (system)	System Status
On	On	On	Board inserted, main CPU is not running (for a very short time[1])
On	On	Flashing	Firmware running diagnostic re-boot
Any value	On	Off	Booting software (for a short time[1])
Any value	Off	Flashing	UNIX is running (for a short time[1])
Any value	Off	On	AUDIX state

1. The time is the period that the LED lights are displayed.

See *DEFINITY AUDIX System — Maintenance,* 585-300-121 for a complete list of the status and alarm states.

If the DEFINITY AUDIX system does not come up to the AUDIX state within 10 minutes, write down the states displayed on the LEDs, and refer to the associated troubleshooting procedures in *DEFINITY AUDIX System — Maintenance*, 585-300-121.

NOTE:
If the system passes through the normal AUDIX state (Red - off, Green - off, Yellow - on) but ends with the following state:

Red - on, Green - off, Yellow - on

you can ignore it at this time. This is an alarm state indicating a software error that probably resulted from a port board alarm. The alarm should turn off when you administer the ports.

8. Continue with Task 2-2.

Task 2-2: Connect to the System Adaptor Cable

The system adapter cable has five connectors available for outside connections (Figure 2-2):

- Female amphenol connector: Alarm Origination/Remote Maintenance Access
- RJ45: Local Area Network (LAN) used for INTUITY™ Message Manager (IMM)
- Female RS-232: Port A: Main Terminal
- Female RS-232: Port B - Control Link or Auxiliary Terminal
- Female RS-232: Port C - External Modem

Refer to Figure 1-1 on page 1-5 for an overview of these connections.

Alarm Origination/Remote Access Connection

The DEFINITY AUDIX system can be connected to a remote location through a remote access connection. This connection can be used to transmit alarms and perform remote maintenance. For instance, when the DEFINITY AUDIX system detects a major malfunction, it closes an alarm relay and can transmit the alarm condition to a remote service center. Technicians at the remote location can then connect to the DEFINITY AUDIX through the modem connection and perform diagnostics to troubleshoot the malfunction.

A remote access alarm notification can be set up in one or both of the following configurations:

- Through an external modem (Port C)
- Through the alarm relay via the cross-connect field (female amphenol)

If Port C is connected to a modem, and the alarm relay connected to the switch via the cross-connect field, the remote service center will receive redundant alarms from both the modem and the switch. Alternatively, you can configure the cross-connect field to activate a local alarm device, such as a warning light or buzzer, instead of sending the alarm to a remote location. When this configuration is combined with a remote connection via the modem, the system can alert both the local administrator and the remote service center.

CAUTION:
Do not connect the alarm relay to any warning device that requires more than the following:

- 1 Amp
- 220 V DC
- 250V AC
- 30W
- 62.5 VA

Refer to Worksheet C-9 to determine which connection to install. Complete one or both of the procedures below.

NOTE:
The following alarm options are activated on the DEFINITY AUDIX system in Task 10-1 in Chapter 10.

Alarm Connection Via an External Modem

To connect the DEFINITY AUDIX system to an external modem:

1. Connect the modem to Port C as shown in Figure 2-4.

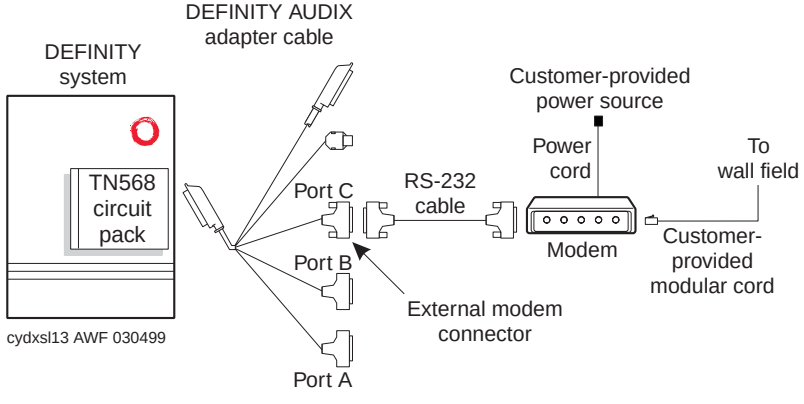

Figure 2-4. Installing the External Modem

CAUTION:
If the DEFINITY AUDIX system is installed in a DC-powered switch, you must use a ground-isolated modem.

2. Plug the modem power cord into a wall outlet and power on the modem.

3. Set the modem options. Refer to "Modem Option Settings (for Port C Modems)" in Appendix H for a complete list of option settings for all supported modems.

Alarm Connection Via the Alarm Relay

To connect the Definity Audix alarm relay to an alarm device:

1. Connect the DEFINITY AUDIX system cable to the cross-connect field.

   Attach the male amphenol connector on a Group 300 cable to the female amphenol connector on the system cable. The other end of the Group 300 cable should already be attached to the cross-connect field.

2. Perform the cross-connects for the alarm origination/remote maintenance access connection using the pin-outs listed below.

Pin	Definition
22	relay contact
47	relay contact

3. Connect the alarm device to the cross-connect field.

   You can connect the switch alarm to the DEFINITY AUDIX alarm relay or to a different device such as a warning light or buzzer.

LAN Connection

If DEFINITY AUDIX is equipped with LAN connectivity, see Worksheet C-2 to configure the LAN connection. If you are not installing a LAN connection, proceed to Task 2-3.

CAUTION:
The LAN connection is only intended for use within a building. To protect the system from lightning or other external disturbances, a router or LAN device that provides voltage suppression should be used.

The 104A connecting block is the demarcation point between DEFINITY AUDIX and the customer-provided LAN. Lucent is responsible for installing the connecting block and for connecting it to the DEFINITY AUDIX system. The customer is responsible for connecting the 104A connecting block to the LAN.

Mount the 104A connecting block to the wall field within 25 feet of the switch, and hard connect eight wires across its two wiring blocks as described below.

1. Arrange the ends of these eight wires into the connecting blocks (Figure 2-5).

2. Snap four protector caps over the top. This presses the wire into the connector.

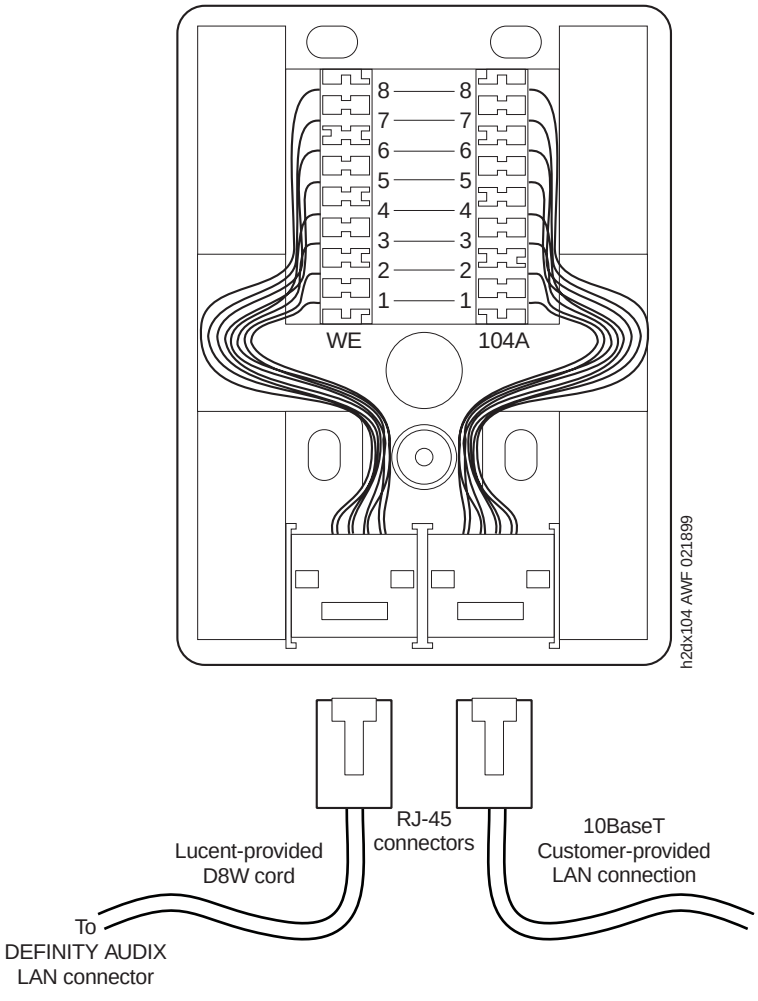

Figure 2-5. 104A Connecting Block

3. Use a D8W modular wall cord (up to 25 feet long) to connect the RJ45 connector from the DEFINITY AUDIX system to the 104A connecting block. Make this connection whether or not you activate INTUITY Message Manager right away.

   If the customer intends to connect a LAN to the DEFINITY AUDIX system, the customer must supply a 10BaseT twisted pair cable with a male RJ-45 connector. The customer is responsible for connecting this cable to the 104A connecting block and to the LAN.

The IMAPI feature for INTUITY Message Manager is activated later on in this manual using the administration terminal.

Port Connections for CL Integration

The Definity Audix system cable has three female RS-232C connectors labeled Port A, Port B, and Port C.

When using CL integration, Port B connects DEFINITY AUDIX to the switch and is not available for a system-access terminal. In this case, only one terminal can be used and it must be connected to Port A. This terminal is usually connected locally but can be connected remotely, if desired. Should ADAP software be used with this terminal, the terminal must be connected to Port A via modem connection (Task 2-3B).

Continue with Task 2-3.

Task 2-3: Install the Terminals

You will install one or two system-access terminals to perform administration and maintenance operations. The main terminal must be connected to Port A, since this port allows access to firmware diagnostics. If the DEFINITY AUDIX system is integrated via DS integration, you can also connect an auxiliary terminal to Port B. You can perform all the administration tasks from his terminal, although you cannot perform firmware diagnostics.

If the terminal is connected via a modem, you can also dial in to the remote maintenance modem on Port C. This connection is preferred for remote maintenance operations since you can perform firmware diagnostics and reboot the system from Port C without losing the modem connection.

Select one of the following subtasks to connect a system-access terminal to Port A. Use Worksheet E-1 to determine which task to complete.

- Installing a Terminal via Direct Connection
- Installing an Additional Administration Terminal via Modem
- Installing an Additional Administration Terminal via Asynchronous Data Units (ADUs)
- Installing an Additional Administration Terminal via 7400A Data Modules

The procedure for connecting a terminal to the DEFINITY AUDIX system is the same for all supported terminals with a few exceptions identified in this book. See the *DEFINITY AUDIX System — System Description*, 585-300-205, for a list of the supported terminals and modems.

If you are connecting a PC using G3-MA or DNA software as a DEFINITY AUDIX system administration and maintenance terminal, see DEFINITY Communications

System Generic 3 Management Applications Station Provisioning, 555-229-202 for installation instructions.

Keep in mind that the DEFINITY AUDIX system is data terminal equipment (DTE), and that a null modem must be installed whenever you connect the system to other DTE hardware. If you are connecting DEFINITY AUDIX to data communications equipment (DCE), use a straight RS-232 connection.

The following table lists the equipment type for hardware typically associated with DEFINITY AUDIX. Use this table to determine the type of connection you need.

Table 2-2. Equipment Type for Typical Hardware

Data Terminal Equipment (null modem required)	Data Communication Equipment (direct connection)
DEFINITY AUDIX system	DEFINITY switch DCE connector
PCs	modems
Serial Printers	data modules
Terminals[1]	

1. Some terminals include DCE ports or DTE to DCE adaptors. Refer to the manual for your terminal to determine the proper connection.

Note that you need to install a null modem between DEFINITY AUDIX and the PC to complete the DTE/DCE pair when connecting the PC, which is a DTE.

The descriptions of Task 2-3B, Task 2-3C, and Task 2-3D assume that a remote terminal is being connected to Port B. These tasks can also be used for a remote connection to Port A by substituting *A* for *B* in the descriptions.

Task 2-3A: Installing a Terminal via Direct Connection

Refer to Figure 2-6 for systems installed in AC-powered switches, and to Figure 2-7 for systems installed in DC-powered switches.

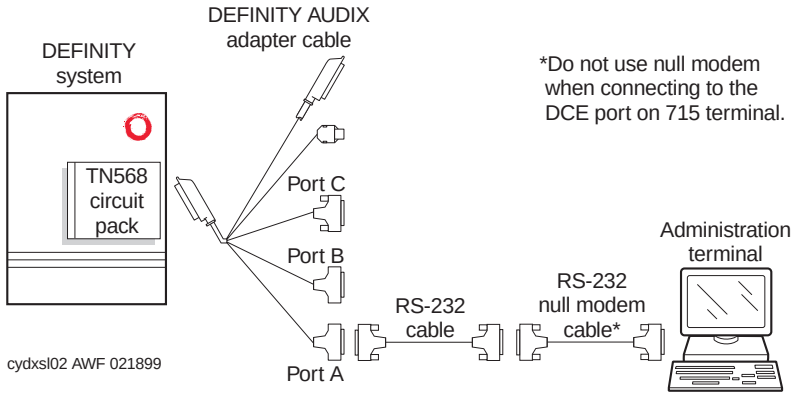

Figure 2-6. Installing a Terminal via Direct Connection (AC Switch only)

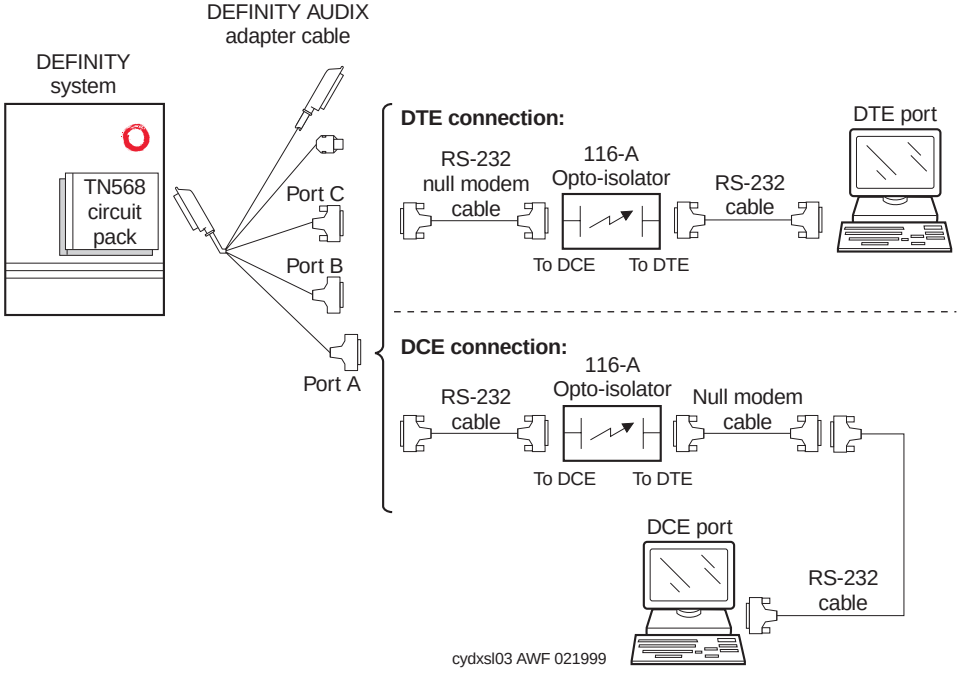

Figure 2-7. Installing a Terminal via Direct Connection (DC Switch Only)

1. If you are installing a new terminal, unpack it according to the instructions supplied with the terminal.

2. Place the terminal on a suitable table within cabling distance of the switch cabinet.
3. Connect the keyboard.
4. If you did not connect an opto-isolator to either PORT A or PORT B, connect the terminal as shown in Figure 2-6.
5. If you did connect an opto-isolator to the PORT A or PORT B connectors on the system cable (in Task 2-1), connect the equipment as shown in Figure 2-7.

   NOTE:
   For a DCE terminal connection, attach a null modem cable between the opto-isolator and the RS-232 cable as shown in Figure 2-7.

   For a 715 terminal, attach the RS-232 cable to the DCE connector on the back of the terminal.
6. Plug the terminal power cord into a wall outlet and power on the terminal.
7. Set the terminal options. See Appendix H, for a list of important option settings for supported terminals.

   If the terminal is installed correctly and the DEFINITY AUDIX system is in the AUDIX state, the terminal displays the login prompt.

   If the terminal does not display the login prompt when the DEFINITY AUDIX system is in the audix state, press RETURN a few times. If the login prompt still does not appear, refer to the troubleshooting procedures for terminal connections in *DEFINITY AUDIX System — Maintenance*, 585-300-121.
8. Continue with Task 2-4.

Task 2-3B: Installing an Additional Administration Terminal via Modem

This task describes how to connect a remote terminal via a modem to Port B, although the same procedure can be used to connect the terminal to Port A or Port C. Note that you can not connect an additional terminal to Port B if installing a control link (CL). Refer to "Port Connections for CL Integration" on page 2-13 for a discussion of proper port connections.

Note the following limitations when deciding which port to connect to:

- Port A is the primary administration terminal. Users can perform firmware diagnostics from Port A, although the modem connection drops when the system is rebooted.

- Port B is the auxiliary terminal connection and can only be used with display set integration. This connection is only for system administration. Users can not perform firmware diagnostics and therefore can not do many maintenance tasks.
- Port C is the remote maintenance terminal connection. From Port C you you can perform any maintenance task, and can reboot the system without losing the modem connection.

To ensure the modems you are installing are supported for DEFINITY AUDIX installation, refer to Table H-6 in Appendix H for a complete list of required modem features.

CAUTION:
If the DEFINITY AUDIX system is installed in a DC-powered switch, you must use a ground-isolated modem.

Refer to Figure 2-8 when performing this task.

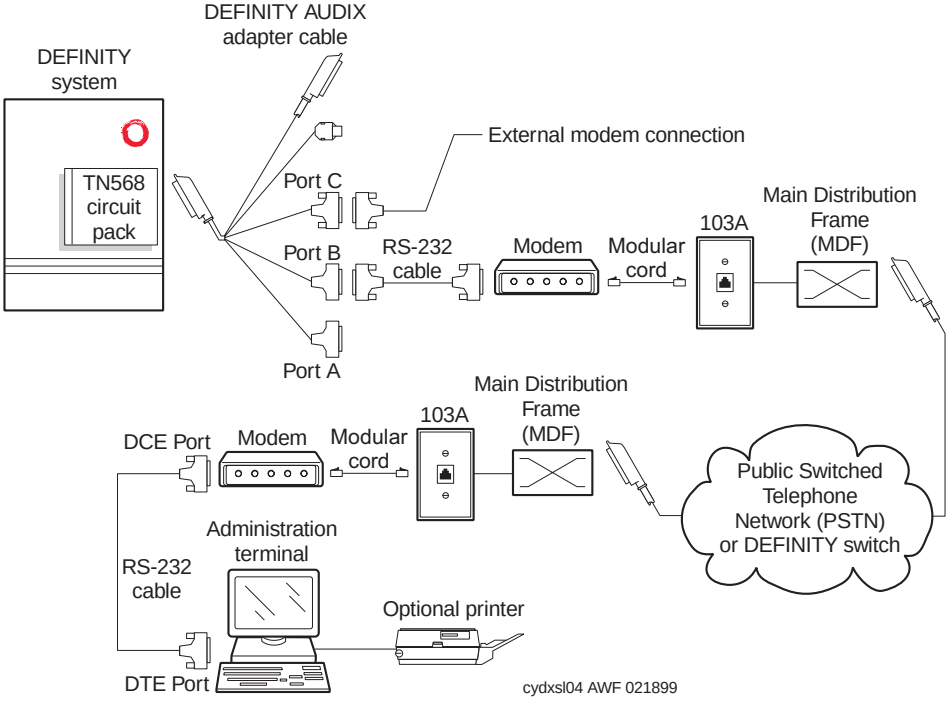

Figure 2-8. Installing an Additional Administration Terminal via Modem

1. In the room where the switch and DEFINITY AUDIX system are located, place one modem between the DEFINITY AUDIX system and a telephone jack. Place the modem close enough so each of the cables can easily reach. Also make sure the power cord on the modem is within reach of a power outlet.
2. Connect the modem to Port B of the Definity Audix system.
   a. Connect the modem to Definity Audix and to a telephone jack as shown in Figure 2-8.
   b. Plug the modem power cord into a wall outlet and power on the modem.
   c. Set the modem options. Refer to Appendix H, for a complete list of option settings for all supported modems.
3. Connect a modem to the terminal.
   a. If you are installing a new terminal, unpack it according to the instructions supplied with the terminal.
   b. Place the terminal on a suitable table and connect the keyboard.
   c. Place the other modem between a telephone jack and the terminal (within reach of a power outlet).
   d. Connect the equipment as shown in Figure 2-8.

   NOTE:
   If you connect the modem to the DCE port on a 715 terminal, you must also connect a null modem cable between the modem and the 715 terminal.

   e. Plug the modem power cord into a wall outlet and power on the modem.
   f. Set the options on the terminal and modem. Refer to Appendix H for a list of important option settings for all supported terminals and modems.
4. At the terminal, enter **AT**

   If the modem is installed correctly, it displays “OK” on the terminal screen.
5. Enter **ATDT** and the telephone number of the modem connected to the DEFINITY AUDIX system ADMIN port (listed on Worksheet E-1).

   If the terminal is installed correctly and the DEFINITY AUDIX system is in the AUDIX state, the screen displays the login prompt.

   If the terminal does not display the login prompt when the DEFINITY AUDIX system is in the AUDIX state, press RETURN a few times. If the login prompt still does not appear, see the troubleshooting procedures for terminal connections in *DEFINITY AUDIX System — Maintenance*, 585-300-121.
6. Log in to the DEFINITY AUDIX system (see Task 2-6 for login details).

If you can't log in successfully, contact the remote service center.

7. Continue with Task 2-4.

Task 2-3C: Installing an Additional Administration Terminal via Asynchronous Data Units (ADUs)

This task describes how to connect a terminal via ADUs to Port B, although the same procedure can be used to connect the terminal to Port A.

Refer to Figure 2-9 when performing this task.

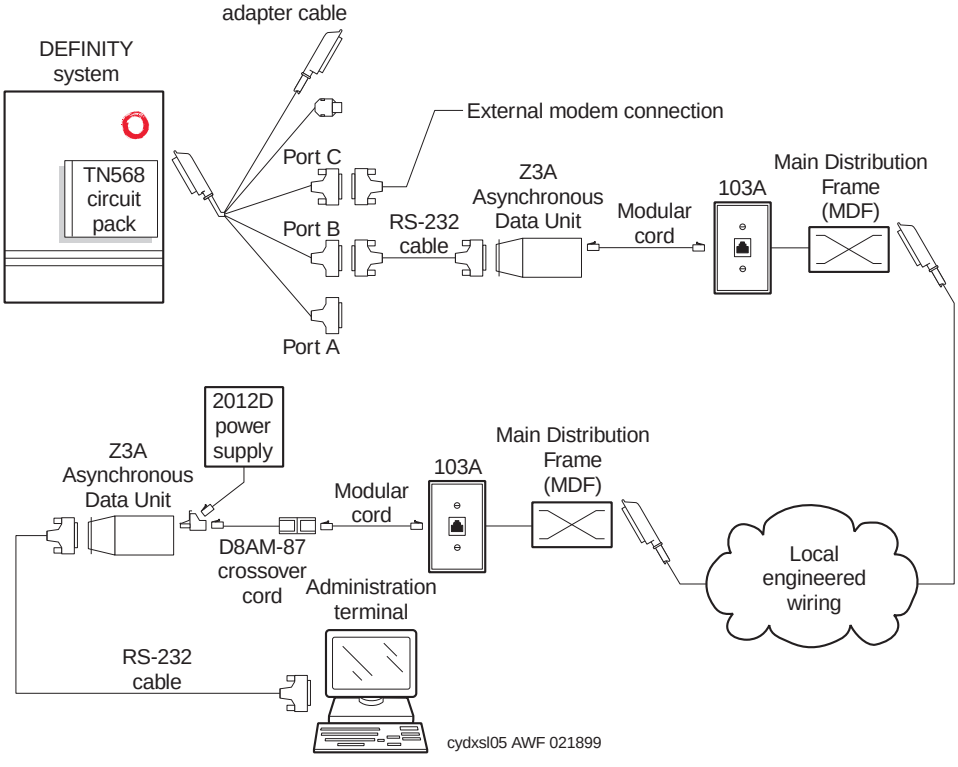

Figure 2-9. Installing an Additional Administration Terminal to DEFINITY AUDIX via ADUs

1. In the room where the switch and DEFINITY AUDIX system are located, connect the Z3A-4 ADU to the DEFINITY AUDIX system and a telephone jack as shown in Figure 2-9.

   NOTE:
   The Z23A ADU power supply can be connected to either ADU.

   To connect the 2012D ADU Power Supply to the ADU, follow the steps below:

   a. Attach the 400B2 adapter to the ADU.

   b. Plug the power supply into the adapter.

   c. Plug the power cord of the power supply into a wall outlet.

2. In the terminal room, connect the Z3A-1 ADU to the terminal.

   a. If you are installing a new terminal, unpack it according to the instructions supplied with the terminal.

   b. Place the terminal on a suitable table and connect the keyboard.

   c. Connect the equipment as shown in Figure 2-9. (The Z23A ADU power supply can be connected to either ADU.)

      NOTE:
      If you connect the ADU to the DCE port on a 715 terminal, you must also connect a null modem cable between the ADU and the 715 terminal.

   d. Power on the terminal.

   e. Set the terminal options. Refer to Appendix H for a list of important option settings for all supported terminals.

If the terminal is installed correctly and the DEFINITY AUDIX system is in the AUDIX state, the screen displays the login prompt.

If the terminal does not display the login prompt when the DEFINITY AUDIX system is in the AUDIX state, try pressing RETURN a few times. If the login prompt still does not appear, see the troubleshooting procedures for terminal connections in *DEFINITY AUDIX System — Maintenance*, 585-300-121.

3. Continue with Task 2-4 (CL integration).

Task 2-3D: Installing an Additional Administration Terminal via 7400A Data Modules

This task describes how to connect a terminal via 7400A data modules to Port B, although the same procedure can be used to connect the terminal to Port A.

Refer to Figure 2-10 when performing this task.

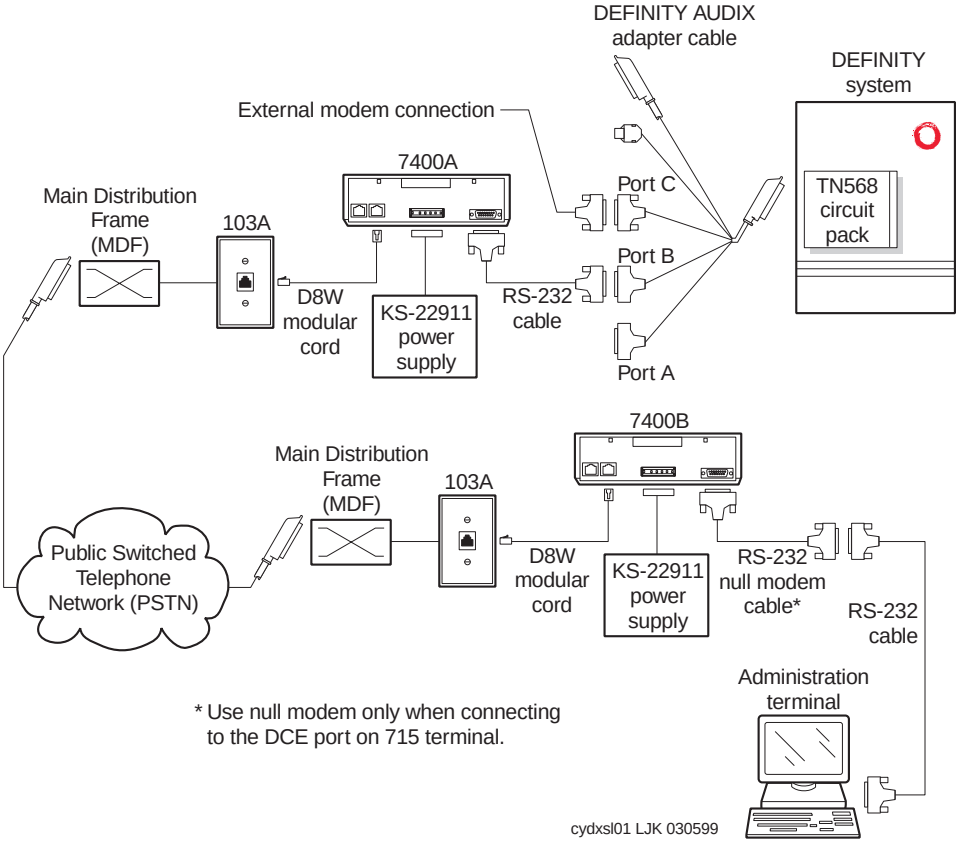

Figure 2-10. Installing an Additional Administration Terminal to the DEFINITY AUDIX system via 7400 Data Modules

NOTE:
The DEFINITY AUDIX system requires the use of a 7400A data module on the switch side of the configuration. You can also use a 7400A data module on the terminal side. However, the 7400B data module is easier to set up and use. Therefore, this procedure describes how to connect a 7400B data module to the terminal. If you are using two 7400A data modules, connect the second 7400A the same as the 7400B, but set the options as described in “Using the Front Panel in 7400A Data Module User’s Manual,” 555-020-706.

1. Make sure the EIA connector card on the 7400A (located under the top panel) is set to DCE (the factory default). If not, unplug the card and turn it around to the DCE setting. See the 7400A Data Module User’s Manual, 555-020-706, for details.
2. Connect the 7400A data module to the DEFINITY AUDIX system.
   a. Connect the equipment as shown in Figure 2-10.
   b. Connect the 4-pin connector on the 7400A power supply to the POWER connector on the data module. Plug the power supply into a wall outlet.
   c. Set the options and interface baud rate on the 7400A data module. Refer to “Using the Front Panel in the 7400A Data Module User’s Manual,” 555-020-706, for details.
3. In the terminal room, connect the 7400B data module to the terminal.
   a. If you are installing a new terminal, unpack it according to the instructions supplied with the terminal.
   b. Place the terminal on a suitable table and connect the keyboard.
   c. Check the dip switches inside the front panel. They are set to the OFF position when the terminal is shipped. If you are not connecting a telephone with this data module, reset the first dip switch (1) to the ON position. If you are connecting a telephone, leave all dip switches OFF.
   d. Connect the equipment as shown in Figure 2-10

      NOTE:
      If you connect the data module to the DCE port on a 715 terminal, you must also connect a null modem cable between the data module and the 715 terminal.

   e. Connect the 7400B power supply to the data module, and plug the power supply into a wall outlet.
   f. Plug the terminal power cord into a wall outlet. Power on the terminal.
4. Set the terminal options. Refer to Appendix H, for a list of important option settings for all supported terminals.

NOTE:
When installing a serial printer on all but a 610 BCT or the 615 BCT, set the options on the printer as described in the manual supplied with the printer. Then set the corresponding options on the terminal to match. On the 610 BCT or the 615 BCT, set the terminal options before you set the printer options.

5. At the terminal, enter **AT**

   If the 7400B data module is connected correctly, the terminal displays "OK".

6. Enter **ATDT** and the telephone number of the 7400A data module connected to the DEFINITY AUDIX system (refer to Worksheet E-1 for this number).

   After a connect interval, if the terminal and 7400 data modules are installed correctly and the DEFINITY AUDIX system is the AUDIX state, the screen displays the login prompt.

   If login prompt is not displayed when the DEFINITY AUDIX system is in the AUDIX state, try pressing RETURN a few times. If the login prompt still does not appear, see the troubleshooting procedures for terminal connections in *DEFINITY AUDIX System — Maintenance*, 585-300-121.

7. Continue with Task 2-4

Task 2-4: Install the Control-Link Cable

This task is required only if the DEFINITY AUDIX system is to be run in the CL integration mode.

The control-link cable can be connected to the switch in one of the following ways:

- Connect to the Packet Gateway Board via an IDI (G3r only)
- Connect to the TN577 via Data Set Units (DSUs) G3r Only
- Connect to the TN577 via 7400Ds (G3r Only)

Use Worksheet A-4 to determine which of the cable-connection configurations to install. Follow the steps in the corresponding subtask.

Task 2-4A: Connect to the Packet Gateway Board via an IDI (G3r only)

1. Connect the equipment as shown in Figure 2-11.

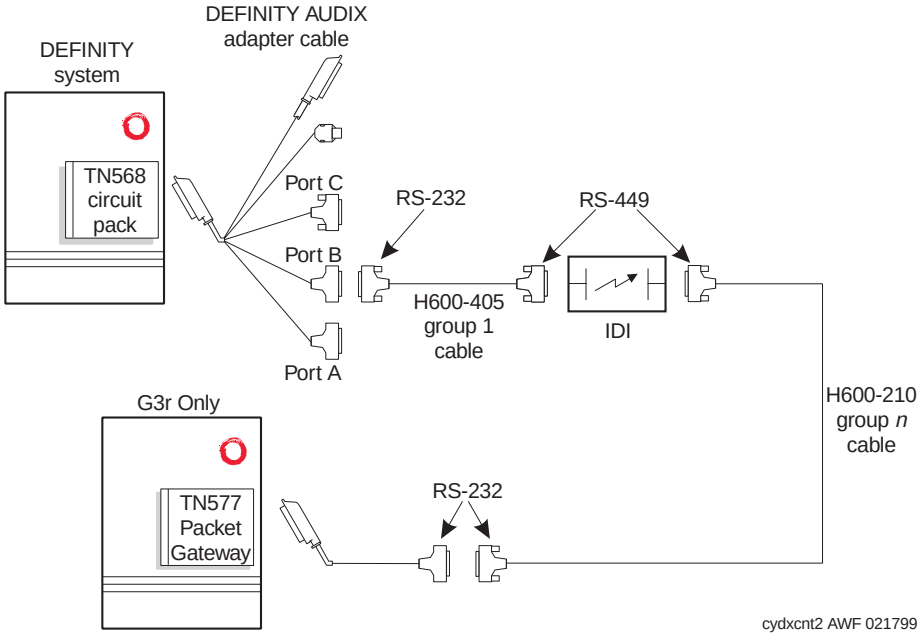

Figure 2-11. Connecting the CL Cable to a Packet Gateway Board via an IDI (G3r Only)

2. Proceed to Task 2-5.

Task 2-4B: Connect to the TN577 via Data Set Units (DSUs) G3r Only

1. Connect the equipment as shown in Figure 2-12.

NOTE:
You must swap transmit and receive pairs at the cross-connect field using a d8AM in the circuit. See the DSU reference manual for more information on DSU connectivity.

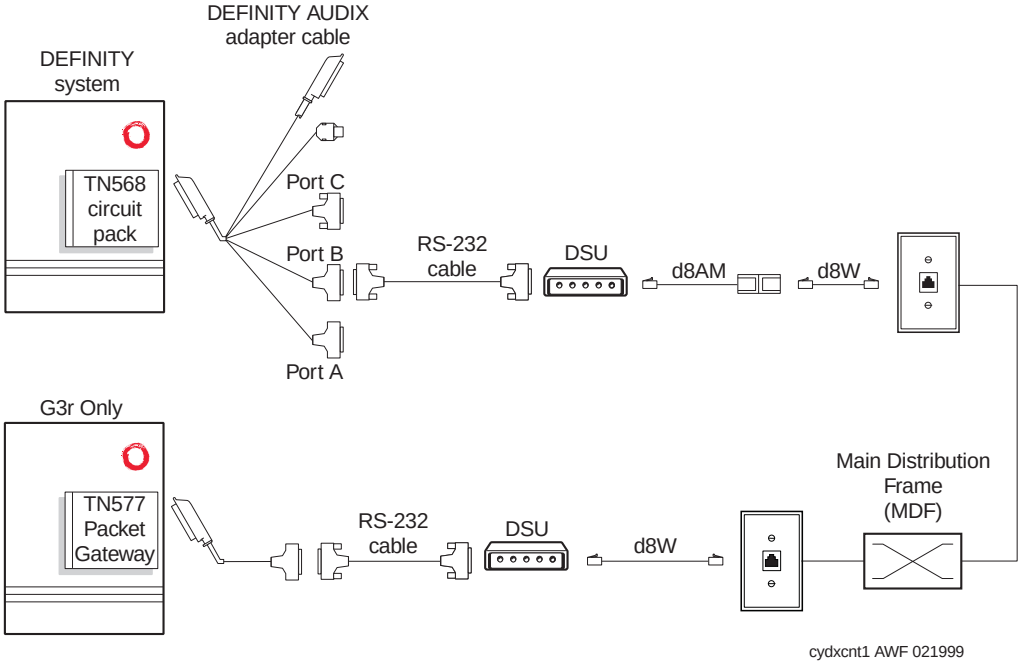

Figure 2-12. Connecting the Control Link Cable to a TN577 via DSUs

2. Proceed to Task 2-5.

Task 2-4C: Connect to the TN577 via 7400Ds (G3r Only)

1. Make sure the EIA connector card on the 7400 (located under the top panel) is set to DCE (the factory default). If not, unplug the card and turn it around to the DCE setting. See the 7400 Data Module User's Manual for details.
2. Connect the 7400 data module to the DEFINITY AUDIX system.
   a. Connect the equipment as shown in Figure 2-13.
   b. Connect the cables on each KS-22911 power supply to the POWER connector on the data modules. Plug the power supply into a wall outlet.

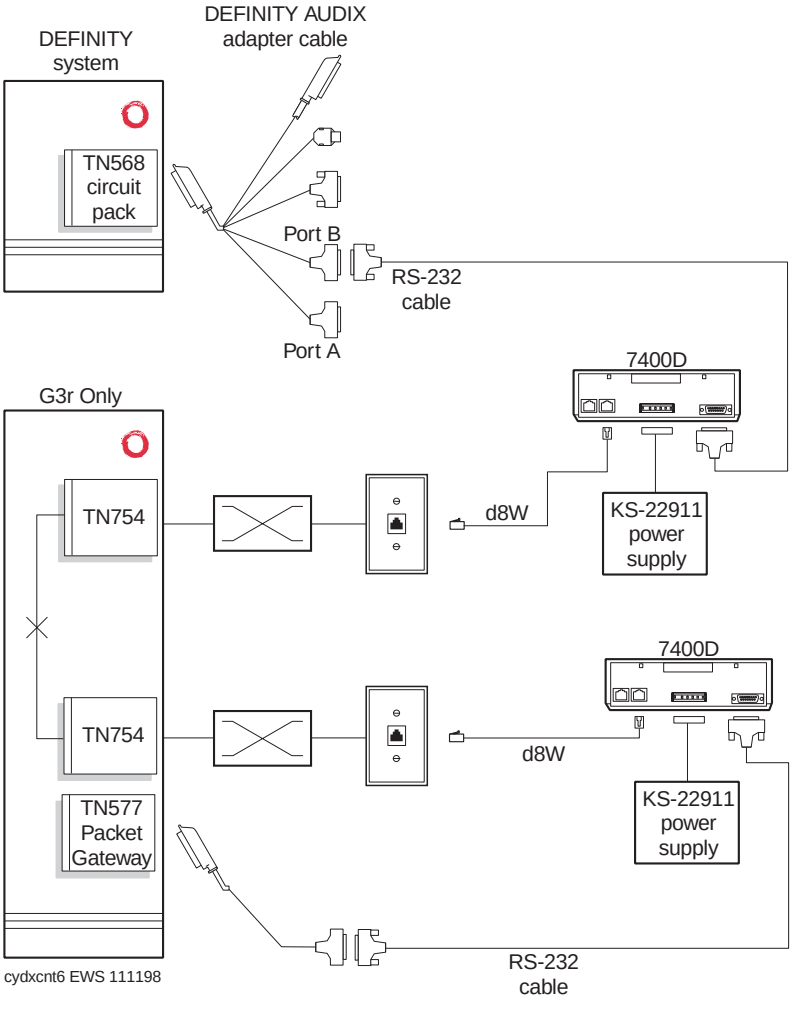

Figure 2-13. Connecting the Control Link Cable to a TN577 via 7400Ds

c. Set the options and interface baud rate on the 7400 data module. Refer to "MPDM Option Settings" in Appendix H for details.

3. Determine your next step:

- If you are installing a printer with DEFINITY AUDIX, continue with Task 2-5.
- If you are not installing a printer, continue with Task 2-6.

Task 2-5: Install the Printer (Optional)

This task is required only if the customer requested a printer on a DEFINITY AUDIX system terminal.

This task describes how to install a Lucent printer. For other printers, follow the instructions supplied with the printer, making sure you set the options required for the DEFINITY AUDIX system as described in this task.

NOTE:
If you connect a serial printer to the DEFINITY AUDIX system, you can not administer the terminal to accept dual hosts.

1. Set up the printer.
   a. Unpack the printer according to the instructions supplied with the printer.
   b. Place the printer on a suitable table.
   c. Connect the power cord to the printer and plug the cord into a wall outlet.
   d. Be sure that the printer has paper, the ribbon is properly installed, and the cover is closed.
2. Connect the printer to the terminal.
   a. Connect one end of the printer cable to either the serial or parallel port on the terminal depending on which type of terminal and printer you are installing. Secure the connector with the captive screws.

      NOTE:
      If you are connecting a serial printer to the DTE connector on a 715 terminal, you must connect a null modem between the printer and the terminal.

   b. Connect the other end to the matching port (serial or parallel) on the printer.
3. Set the options on the printer.
4. Proceed to Task 2-6.

Task 2-6: Finalize and Test the Hardware

1. Verify that the DEFINITY AUDIX system is in the AUDIX state.

To do so, check the faceplate of the DEFINITY AUDIX system. If the system is in the AUDIX state, the LEDs will look as follows: red - any state, green - off, yellow - on.

2. Log in to the DEFINITY AUDIX system at the terminal (both terminals if you have installed more than one) to verify that the terminals and modems (if applicable) are connected and set up correctly.

   NOTE:
   If the login prompt is not displayed, press RETURN once or twice.

   a. At the login prompt, type **craft** and press RETURN.

      NOTE:
      To send the information to the DEFINITY AUDIX system, the RETURN key (part of the numeric keypad) must be pressed after you type a command or a response to a prompt. Note that on some keyboards, this key is labeled ENTER instead of RETURN.

      The system displays the Password prompt.

   b. Enter **crftpw**

      The system displays the Enter terminal type prompt.

   c. Enter one of the following:

      - **513** for the following terminals:
        - 513 BCT
        - 715
        - 610 BCT with a 513 emulation package
        - 615 BCT with a 513 emulation package
        - PC with a 513 emulation package

        NOTE:
        Since **513** is the default, you can just press RETURN to select it.

      - **4410** for the following terminals:
        - 4410
        - 5410 terminal
        - 610 BCT with a 4410 emulation package.
        - 615 BCT with a 4410 emulation package.
        - PC with a 4410 emulation package.
      - **4425** for the following terminals:

— 4425

— 5425

— PC with a 4425 emulation package

- **5420** for the following terminals:

  — 5420

  — 4415

If the terminals and modems (if applicable) are connected properly and the options are set correctly, the system displays the AUDIX command line.

NOTE:
If you have installed more than one terminal, you can use either one for the remainder of this task.

3. Verify that the hardware and software components are installed properly. At the DEFINITY AUDIX system command line, enter **list configuration**

   The system displays the List Configuration screen. The following screen shows sample locations, board codes, and vintages.

```
drmfb15      Active     Alarms:  m A  Thresholds: none                    Logins: 2
list configuration
                                LIST CONFIGURATION

 Software Vintage : Release 4.0, Issue 1

                    Location    Type     Board Code      Vintage

                    01C06    MFB_BD       TN568          1
                             386_FW                      1
                    01C0600 DISK
                    01C0602 MO_DISK

enter command:
```

Figure 2-14. List Configuration Screen

NOTE:
The `Location` field initially displays “1a01” for component types MFB_BD, DISK, and MO_DISK since they are not yet administered. Ignore this field.

4. Place the label containing the DEFINITY AUDIX system shutdown warning next to the cabinet power switch.
5. Give the program disk, language disk, and one of the blank magneto-optical cartridge disks to the DEFINITY AUDIX system administrator, or put them in a safe place away from electromagnetic parts. Keep the other blank magneto-optical disk. You will install it in the drive later when you complete Task 5-3.
6. Continue with Chapter 3.

Definity AUDIX Option Administration

3

This chapter describes the tasks required to activate the customer options on the DEFINITY AUDIX System.

Worksheets Needed

Before beginning these tasks, make sure you have completed the following worksheets (included as appendices).

- Worksheet C-1: Activate Customer Options
- Worksheet C-2: Activate IMAPI for the AUDIX Server Hardware (LAN) Options
- Worksheet C-8: Add Subscribers

Dual Administration on the 715 Terminal

If you are using the 715 terminal, you can log on to both the switch and the DEFINITY AUDIX system to perform administration tasks and can easily toggle back and forth between the two. To use this feature, you must connect both the switch and DEFINITY AUDIX to a common terminal, then configure the terminal as a dual host.

The toggling functions are controlled by the four function keys, F1, F2, F3, and F8 as described in Table 3-1.

Table 3-1. Function Keys Used for Windowing on the 715

Key	Operation
Ctrl+F3	Enables the toggling function keys and displays their labels
F1	Turns off the toggling function keys
F2	Toggles between the DEFINITY AUDIX system window and the switch window
F3	Toggles between split-screen mode and full-screen mode
Ctrl+F8	Enables the DEFINITY AUDIX function keys and displays their labels (only in the DEFINITY AUDIX system window). Ctrl+F3 enables the windowing keys again and displays their labels.

DEFINITY AUDIX Function Keys

You can press the following function keys to perform basic tasks on the DEFINITY AUDIX system:

Table 3-2. Function Keys to Perform Tasks on the DEFINITY AUDIX system

Key	Operation
F1	Cancel the current task
F2	Refresh the screen
F3	Enter (or continue) the current command
F4	Clear a field value
F5	Display an explanation of the “Help” and “Choice” function keys
F6	List choices to type in the command line
F7	Display the next page
F8	Display the previous page

Task 3-1: Activate Customer Options

Customer options are normally activated before the system is shipped. Complete this task to ensure that the customer options are activated and set to their correct values. Use Worksheet C-1 to complete this task.

7. At the DEFINITY AUDIX administration terminal, enter **display system-parameters customer-options**

   The system displays the System-Parameters Customer-Options screen.

```
drmfb15      Active     Alarms:  m A  Thresholds: none                Logins: 2
change system-parameters customer-options                            Page 1 of 2
                          SYSTEM-PARAMETERS CUSTOMER-OPTIONS


                           Port Emulation Type: tn2181

                        Switch Integration Type: display-set

                  Maximum Number of Voice Ports: 12

    Maximum Number of Digital Networking Ports: 0

                       AMIS Analog Networking? y

                                  Multilingual? n

             Maximum Number of IMAPI Sessions: 32

             Hours of Voice Storage Purchased: 40
                           Total Hours on Disk: 95

enter command:
```

Figure 3-1. System-Parameters Customer-Options Screen

NOTE:
The DEFINITY AUDIX Status line displays an “M” for major alarm (and possibly other alarms) in the alarms field. The alarms should resolve themselves when you administer the voice ports in Task 5-1E and can be ignored at this time.

8. Compare the value of the following fields on the System-Parameters Customer-Options screen with the values entered in Worksheet C-1.
   - — Port Emulation Type
   - — Switch Integration Type

— Maximum Number of Voice Ports

— Maximum Number of Digital Networking Ports

— AMIS Analog Networking?

— Multilingual?

— Maximum Number of IMAPI Sessions

— Hours of Voice Storage Purchased

9. Press F1 (Cancel) to exit the screen.
10. If the value of any of these fields is *not* as specified on Worksheet C-1, contact the remote service center to have the values corrected.
11. With the cursor on the command line, enter **logoff** to log off the terminal.
12. Continue with Chapter 4.

Initial Switch Administration: G3r/R5r

4

This chapter describes the required switch administration for the DEFINITY AUDIX system R4.0 on the following DEFINITY switches:

- Release 5r
- G3r (V1 Release 5.4 or greater)
- G3r (V2-V4, Release R5 or greater)

NOTE:
If you are changing the type of switch integration or the number of voice ports on an existing system, skip this chapter and complete the appropriate procedure in Appendix I.

Worksheets Needed

Before beginning these tasks, make sure you have the completed the following worksheets.

- Worksheet A-2: Port Slot Assignments (For Carrier Rearrangement)
- Worksheet B-1: Administer the Voice Ports as Stations (Digital Port Emulation)
- Worksheet B-2: Assign the Hunt Group (Digital Port Emulation)
- Worksheet B-3: Assign the Call Coverage Path for Voice Ports (Digital Port Emulation)
- Worksheet B-4: Assign the Call Coverage Path for Subscribers (Digital Port Emulation)
- Worksheet B-8a: Assign the Data Link (Control Link Integration for G3r Switches)

What You Must Know Before You Begin This Chapter

Before you begin this chapter, you must know which options the DEFINITY AUDIX system is using. You can dial into the DEFINITY AUDIX system and enter **display system-parameters customer-options** to view the following information.

- The number of voice ports.
- Whether the system is using Display Set (DS) switch integration or Control Link (CL) switch integration.
- Whether digital networking is used. Digital networking can only be used with 8 or fewer voice ports. Digital port emulation (TN754 or TN2181) is required.
- Whether digital port emulation (TN754 or TN2181) or analog port emulation (TN746) is used. We recommend that customers who currently have analog port emulation switch to digital port emulation. Analog port emulation may have been used on earlier releases of the DEFINITY AUDIX system . See Appendix I if analog port emulation was used previously and you want to change the type to digital port emulation.

Translation Overview Tables

Use the following tables to check the translations on the switch for the DEFINITY AUDIX system. Each table lists the required field values for the relevant switch administration screens.

CAUTION:
Do not use the following tables to administer DEFINITY AUDIX on the switch unless you are very experienced with this installation. Instead, refer to the tasks following the tables for detailed instructions.

Table 4-1. Field Values for Voice Port Assignments: TN2181 emulation

Field	G3V2–V4/R5/R6	R7 or Greater
Circuit Pack screen; Code: first slot	blank	ADX12D
Circuit Pack screen; Code: second slot	TN2181	TN568
Station screen; Type	7405D	ADX16D

Table 4-1. Field Values for Voice Port Assignments: TN2181 emulation

Field	G3V2–V4/R5/R6	R7 or Greater
Name - Ports 1-10 and 12	AUDIX plus port number	AUDIX plus port number
Name - Port 11	AUDIX TRANSFER	AUDIX TRANSFER
Coverage Path	# assigned to voice ports	# assigned to voice ports
Display Module	y	y
LWC Reception	default value	default value
LWC Activation	y	y
Coverage Message Retrieval	y	y
Restrict Last Appearance (ports 1 through 4 and port 12)	y	y
Restrict Last Appearance (ports 5 through 11)	n	n
Disp Client Redir	y if hospitality = y on switch	y if hospitality = y on switch
Display Language	English	English
All other features	n	n

Table 4-2. Field Values for Button Assignments (Digital Port Emulation)

	ports 1 through 4 and port 12	ports 5 through 11
Buttons 1 – 9	call-appr	call-appr
Button 10	call-appr	brdg-appr Btn: 10 Ext: *xxxxx* (*xxxxx* = extension # for port 12)

Table 4-3. Field Values for Feature Button Assignments (Digital Port Emulation)

Button number	Feature Buttons
1	lwc-store
2	lwc-cancel
3	aux-work Grp: *xx* (*xx* = DEFINITY AUDIX hunt group number)

NOTE:
If the station screen includes the RC:____ field, leave it blank.

Table 4-4. Field Values for Display Button Assignments (Digital Port Emulation)

Button number	Display Button Assignment
1	normal
2	inspect
3	date-time
4	directory
5	cov-msg-rt
6	next
7	delete-msg

Administration Overview

The chapter describes required administration for both CL Integration and DS Integration. Refer to Chapter 6, "Optional Switch Feature Administration", for any optional switch feature administration.

Native Mode of the Switch

The DEFINITY AUDIX R4.0 system uses the TN568 circuit pack. However, many switches do not recognize this circuit pack, so the DEFINITY AUDIX system must emulate a circuit pack recognized by the switch (in this case, the TN2181). The DEFINITY AUDIX system can be configured for ports in increments of 2, with a

maximum of 12 ports with no networking ports, or 8 ports with one networking port.

Switches with R7 or greater software recognize the TN568 circuit pack as a DEFINITY AUDIX system. This recognition is called *native mode* and helps service technicians more quickly recognize a DEFINITY AUDIX system when diagnosing alarms or other problems. See the table below for the circumstances in which native mode support exists.

Digital Networking Availability

To enable networking, you must administer voice ports as digital stations, although the DEFINITY AUDIX circuit pack may be administered on the switch in either DS or CL integration. DEFINITY AUDIX Version 4.0 supports only one digital networking port. To administer digital networking, you can not administer more than 8 voice ports on the DEFINITY AUDIX system.

Summary of Integrations, Emulations, and Capacities

The following table lists the various combinations of integration, emulation, and capacities available when administering the switch to work with the DEFINITY AUDIX system

Table 4-5. Summary of Integration, Emulations, and Capacities

Switch Version	Integration	Emulation	Native (y/ n)	Networking (y/n)	TN568 max pts vm / net
G3V2/V3V4 /R5/R6	CL	TN2181 (Digital)	no	yes	12/0 8/1
	CL	TN746 (Analog)	no	no	12/0
	DS	TN2181 (Digital)	no	yes	12/0 8/1
R7 or greater	CL	TN2181 (Digital)	yes	yes	12/0 8/1
	CL	TN746 (Analog)	yes	no	12/0
	DS	TN2181 (Digital)	yes	yes	12/0 8/1

TN2181 (Digital Port) Emulation, Control Link Integration

The tasks in this chapter administer the DEFINITY AUDIX system to emulate the TN2181 digital port circuit pack on the switch using CL integration.

Complete the following tasks to administer the voice ports on the switch.

- Identifying the DEFINITY AUDIX Circuit Pack
- Assigning the User Defined Adjunct Names
- Defining the Call Coverage Path for Voice Ports
- Defining Call Coverage Paths for Subscribers
- Administering the Voice Ports as Stations
- Assigning Voice Ports to the Hunt Group
- Administering the Digital Networking Port (Optional)
- Assigning the Data Link

Task 4-1: Identifying the DEFINITY AUDIX Circuit Pack

When the DEFINITY AUDIX system circuit pack is in place in the carrier, the switch recognizes the circuit pack and the circuit pack information appears on the circuit pack screen. You do not have to administer anything.

However, when you first install the DEFINITY AUDIX system or change the circuit pack emulation, you should ensure that the switch identifies the correct circuit pack emulation. To check the DEFINITY AUDIX system circuit pack on the switch, obtain the port slot assignment from Worksheet A-2. The program manager completed this worksheet with the customer during the planning phase for the DEFINITY AUDIX system.

The DEFINITY AUDIX circuit pack is a TN568. The DEFINITY AUDIX R4.0 occupies two port slots on the switch, and the TN568 circuit pack occupies the second of the two slots.

Figure 4-1 shows the DEFINITY AUDIX system in slots 8 and 9 of a switch carrier. The TN568 circuit pack resides in the second slot, Slot 9.

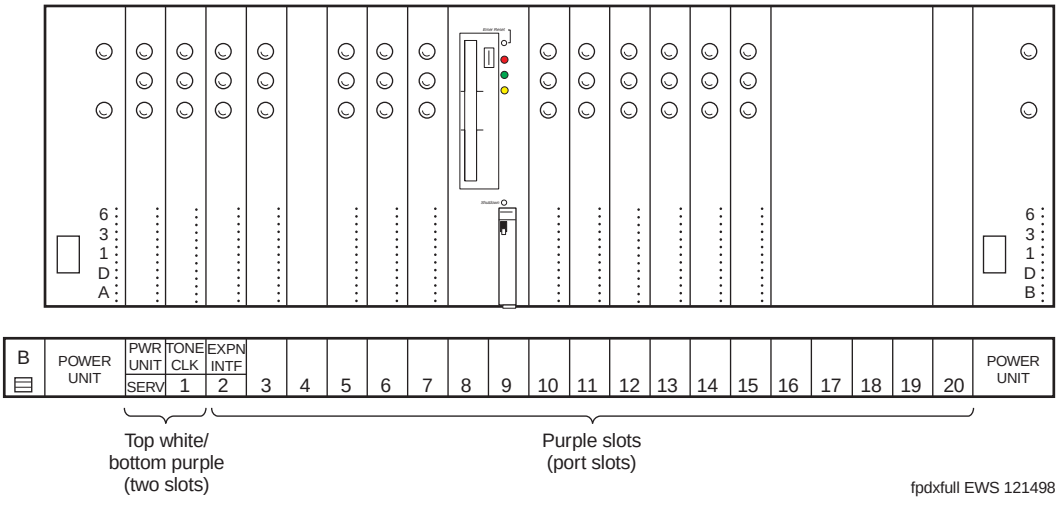

Figure 4-1. DEFINITY AUDIX System in a Switch Carrier (Slots 8 and 9)

Use the following procedure to verify that the circuit pack settings are correct:

1. At the switch administration terminal, enter **display circuit-packs *cabinet***

   where *cabinet* is the number of the switch cabinet.

   The Circuit Pack screen for the switch appears.

```
display circuit-packs 3                                  Page 4 of 5
                              CARRIER 2B

          Cabinet: 1                           Carrier B
Cabinet Layout: five carrier               Carrier Type: port

 Slot Code   Sfx    Name           Slot Code   Sfx    Name
  01:TN762       HYBRID LINE        11:TN742          ANALOG LINE
  02:TN742       ANALOG LINE        12:
  03:TN742       ANALOG LINE        13:TN771   B      MAINTENANCE/TEST
  04:TN742       ANALOG LINE        14:TN748   B      TONE DETECTOR
  05:TN742       ANALOG LINE        15:
  06:TN742       ANALOG LINE        16:
  07:                               17:
  08:                               18:
  09:TN2181      DIGITAL LINE       19:
  10:TN742       ANALOG LINE        20:

 '#' indicates circuit pack conflict.    * Use slots 01-18 with
                                           SCC Port Cabinet.
                                         * Use slots 01-20 with
                                           MCC Port Carrier.
```

Figure 4-2. Example of a Circuit Pack Screen with TN2181 Emulation (G3rV2)

```
display circuit-packs 3                                        Page 3 of 5   SPE A
                          CIRCUIT PACKS
        Cabinet: 3                        Carrier: C
Cabinet Layout: five-carrier       Carrier Type: port

Slot Code Sfx Name                    Slot Code Sfx Name
 00:                                   11:
 01:                                   12: TN465 B  CO TRUNK
 02: TN754 B  DIGITAL LINE             13: TN464 C  UDS1 INTERFACE
 03:                                   14: TN754 B  DIGITAL LINE
 04:                                   15: TN754 B  DIGITAL LINE
 05:                                   16:
 06:                                   17:
 07: TN754 B  DIGITAL LINE             18:
 08: ADX16    RESERVED-AUDIX-16D       19:
 09: TN568    MULTI-FUNCTION           21:

'#' indicates circuit pack conflict.
```

Figure 4-3. Example of a Circuit Pack Screen with TN2181 Emulation (R7r)

2. Check that the values listed on the screen correspond to the value in the table below.

Table 4-6. Circuit Pack Screen Entries

Field	Description
Slot	The port slot in which the DEFINITY AUDIX circuit board resides. The DEFINITY AUDIX circuit board occupies the second slot of the two port slots occupied by the system.
Code	The circuit pack identification code in the slot occupied by the TN568 circuit pack (second slot). **TN2181** for G3V2/V3/V4/R5/R6 **TN568** for R7 or greater The switch populates the remaining information, if any, for the first slot.
Sfx	Suffix for the circuit pack identification code. This field should be blank.

Table 4-6. Circuit Pack Screen Entries

Field	Description
Name	This display varies depending on the switch type and version.

3. Press [ENTER] or [CANCEL] to exit the screen.
4. If the Code field does not display the correct emulation for the DEFINITY AUDIX system, call the remote service center.
5. Continue with Task 4-2.

Task 4-2: Assigning the User Defined Adjunct Names

To enter the name of the DEFINITY AUDIX system on the User Defined Adjunct screen:

Use the following procedure:

1. To access the User Defined Adjunct Names screen, enter **change adjunct-name** at the switch administration terminal.

   The User Defined Adjunct Names screen appears:

```
change adjunct-names                                Page 1 of 1      SPE A


                          USER DEFINED ADJUNCT NAMES


                 AUDIX NAMES            MESSAGING SERVER NAMES
                 1: audix                     1: _______
                 2: audixcl                   2: _______
                 3: _______                   3: _______
                 4: _______                   4: _______
                 5: _______                   5: _______
                 6: _______                   6: _______
                 7: _______                   7: _______
                 8: _______
```

Figure 4-4. Example of a User Defined Adjunct Names Screen (G3r/R5r)

2. Enter a name for the DEFINITY AUDIX system under AUDIX Names on the screen. The entry can be any alphanumeric sequence up to 7 characters long.
3. Write down the name you have chosen.

   During switch administration, you will enter this name on the following screens:

   - Voice Port Station screens
   - Page 2 of the Hunt Group screen
   - Processor Channel Assignment screen
4. Continue with Task 4-3.

Task 4-3: Creating the Hunt Group

Before you can administer voice ports for DEFINITY AUDIX, you must first create a hunt group which you will later assign to each of the voice ports.

To create the hunt group:

1. Obtain the hunt group number from Worksheet B-2.
2. At the switch administration terminal, enter **add hunt-group *number***

   where *number* is the number of the hunt group you obtained in Step 1.

   The Hunt Group screen displays.

NOTE:
If you have not obtained a hunt group number, you can enter **list hunt group** to find an available hunt group, or enter **add hunt-group next** to assign the next available hunt group number.

```
change hunt-group 150                                          Page 1 of 41     SPE B
                                      HUNT GROUP
      Group Name:
    Group Number:                  Group Extension:                Group Type: ucd
                                            Skill? n                     ACD? n
           Queue? y                        Vector? n
   Security Code:        Night Service Destination:                      COR:
ISDN Caller Disp: mbr-name           Coverage Path:                       TN: 1




                                         Expected Call Handling Time (sec): 180

                Queue Length:
     Calls Warning Threshold:                     Calls Warning Port:
      Time Warning Threshold:                      Time Warning Port:
```

Figure 4-5. Example of a Hunt Group Screen — Page 1

NOTE:
The content of the screens and the position of the fields vary with each release of the switch software.

3. Use the entries in the table below and Worksheet B-2 to complete page 1 of the Hunt Group screen.

Table 4-7. Hunt Group Screen Entries — Page 1

Field	Entry
Group Name	The name you want display set users to see when they call the DEFINITY AUDIX system to access voice mail features. Use up to 15 characters. Obtain the Group Name from Worksheet B-2.
Group Number	Displays the hunt group number assigned to the hunt group when the **add hunt-group** command is entered. Write down the Group Number. In Task 4-4, you enter **h** followed by this number in the Point1 field of the Coverage Path screen.
Group Extension	An unused extension number to be assigned to the hunt group. The extension number must be 3 through 5 digits, and must be compatible with the switch dial plan. This is the extension users will dial to access voice mail features. Obtain the Group Extension from Worksheet B-2 .
Group Type	**ucd** (G3V1-V4/R5) **ucd-mia** (G3R6 or greater)
Skill?	**n**
ACD	**n** The DEFINITY AUDIX voice ports will not operate in an ACD group.
Queue?	**y** A queue is optional but recommended. Refer to Worksheet B-2 for information on setting up queues.
Vector?	**n** The DEFINITY AUDIX hunt group may be vector controlled. See Worksheet B-2 to set up vector control.
Security Code	Leave this field blank.

Table 4-7. Hunt Group Screen Entries — Page 1

Field	Entry
Night Service Destination	The destination where calls to this hunt group will redirect when the hunt group is in the night service mode. Allowable entries are an assigned extension number (can be a VDN extension), or the attendant. You can also leave this field blank. This field will be left blank for most applications, but, occasionally, an application requires calls to be redirected when the hunt group is in night service mode.
COR	Enter the class of restriction (COR) number that reflects the desired restriction for the DEFINITY AUDIX hunt group. Obtain the COR from Worksheet B-2 . For security reasons, you can assign the DEFINITY AUDIX hunt group its own COR. This COR should restrict the hunt group from accessing all outgoing trunks, or allow access only to those outgoing trunks needed for Outcalling or AMIS Analog Networking. We recommend that you do not use the default COR.
ISDN Caller Display	Enter **grp-name** or **mbr-name** to specify whether the hunt group name or member name, respectively, will be sent to the originating user (hunt group name will be used for most applications). You can complete this field if the ISDN-PRI option on the switch System-Parameters Customer-Options screen is enabled. If ISDN-PRI is not enabled, this field must be blank.
Coverage Path	Leave this field blank. Do not assign a coverage path to this DEFINITY AUDIX hunt group. Sending a call to somewhere other than the hunt group can cause problems with the DEFINITY AUDIX system.
TN	Tenant Partition Number. Default is 1.
Expected Call Handling Time (sec)	Enter a number from **0** to **9999**.
Queue Length	If Queue is **y**, enter the desired queue length. We recommend using the number of DEFINITY AUDIX voice ports you purchased. For example, you can use entries of **2**, **4**, **6**, **8**, **10**, or **12**. Design a queue based on your requirements.
Calls Warning Threshold	Leave this field blank.
Time Warning Threshold	Leave this field blank.
Calls Warning Port	Leave this field blank.
Time Warning Port	Leave this field blank.

4. Press NEXTPAGE.

   The switch displays page 2 of the Hunt Group screen.

```
change hunt-group 150                                    Page 2 of 41     SPE B
                                      HUNT GROUP

             Message Center:
  Message Center AUDIX Name:                              Primary? y
              LWC Reception:
                 AUDIX Name:
      Messaging Server Name:


 First Announcement Ext:                        First Announcement Delay (sec):
```

Figure 4-6. Example of a Hunt Group Screen — Page 2

5. Use the entries in the table below to complete page 2 of the Hunt Group screen.

Table 4-8. Hunt Group Screen Entries — Page 2

Field	Description
Message Center	**audix** **msa** (if used in vectors)
Message Center AUDIX Name	The name of the Message Center AUDIX. This field displays if the Message Center is **audix**.
Primary?	**y** Indicates that the specified AUDIX or Messaging Server is the primary adjunct.

Table 4-8. Hunt Group Screen Entries — Page 2

Field	Description
Calling Party Number to INTUITY AUDIX?	**n** (G3R7 or greater)
LWC Reception	none
AUDIX Name	The name of the DEFINITY AUDIX system as it appears on the User Defined Adjunct Names screen.
Messaging Server Name	Name of the server as it appears on the User Defined Adjunct Names screen.
First Announcement Extension	A recorded announcement extension number. You can leave this field blank. This is the announcement the caller receives after being in the queue for the time interval specified in the First Announcement Delay field. (See "Switch Recorded Announcement" on page 6-6 in Chapter 6, "Optional Switch Feature Administration", for instructions on setting up a recorded announcement.)
First Announcement Delay (sec)	This field is optional if the queue field is **y** and must be left blank if there is no first announcement. Enter the number of seconds that a call can remain in queue before the associated first announcement is given to the calling party.

6. Press [ENTER] to save the hunt group.

   NOTE:
   You will add the DEFINITY AUDIX voice ports to this hunt group in Task 4-7.

7. Continue with Task 4-4.

Task 4-4: Defining the Call Coverage Path for Voice Ports

Define a call coverage path for the voice ports using the DEFINITY AUDIX hunt group as Coverage Point 1. The DEFINITY AUDIX voice ports cover to themselves.

To define a call coverage path for the voice ports only:

1. At the switch terminal, enter **add coverage path** *number*, where *number* is the call coverage path number assigned in Worksheet B-3.

NOTE:
If you have not obtained a coverage path number, you can enter **list coverage path** to find an available coverage path, or enter **add coverage path next** to assign the next available hunt group number.

The switch displays the Coverage Path screen.

```
add coverage path 4                                        Page 1 of 1     SPE A
                                COVERAGE PATH

                          Coverage Path Number: 4
                              Next Path Number: ___     Linkage:

COVERAGE CRITERIA

   Station/Group Status         Inside Call         Outside Call
             Active?                 n                   n
               Busy?                 n                   n
       Don't Answer?                 n                   n       Number of Rings: 2
                All?                 y                   y
DND/SAC/Go to Cover?                 n                   n

COVERAGE POINTS
    Terminate to Coverage Pts. with Bridged Appearances? y
       Point1: h150                 Point2:                     Point3:
       Point4:                      Point5:                     Point6:
```

Figure 4-7. Example of a Voice Port Coverage Path Screen

2. Use the entries in the table below to complete the Coverage Path screen.

Table 4-9. Voice Port Coverage Path Screen Entries

Field	Entry
Coverage Path Number	Displays the coverage path number assigned to the coverage path when the **add coverage path** command is entered. This number should appear in the Coverage Path field on all of the voice port Station screens.
Coverage Criteria	The conditions that, when met, cause the call to redirect to coverage.

Table 4-9. Voice Port Coverage Path Screen Entries — *Continued*

Field	Entry	
Station/Group Status	Inside Call	Outside Call
Active?	**n**	**n**
Busy?	**n**	**n**
Don't Answer?	**n**	**n**
All? All calls go immediately to coverage	**y**	**y**
DND/SAC/Go to Cover?	**n**	**n**
Linkage	This is a display-only field that shows up to two additional coverage paths, when assigned, that the Next Path Number field entry is linked to.	
Next Path Number	Optional. Enter the number of the coverage path to which a call will be redirected in case of coverage failure at the current path.	
Number of Rings	Use the default. All calls go immediately to coverage.	
Point1	**h** followed by the DEFINITY AUDIX hunt group number assigned in Task 4-7.	

3. Press ENTER.
4. Continue with Task 4-5

Task 4-5: Defining Call Coverage Paths for Subscribers

Define a call coverage path for subscribers with the DEFINITY AUDIX hunt group as a coverage point. You may need to define several call coverage paths depending on how the customer wants to handle call coverage for groups of subscribers. If the DEFINITY AUDIX system was installed on an existing switch, you may need to add the DEFINITY AUDIX hunt group as another coverage point for existing coverage paths. Refer to Worksheet B-4 for coverage paths selected by the customer.

To define a call coverage path for subscribers, use the following procedure:

1. At the switch administration terminal, enter **add coverage path *number***, where *number* is the Call Coverage Path Number assigned in Worksheet B-4.

   The switch displays the Coverage Path screen.

```
change coverage path 16                                    Page 1 of 1     SPE B
                                  COVERAGE PATH

                         Coverage Path Number: 16

                             Next Path Number:             Linkage

COVERAGE CRITERIA

       Station/Group Status        Inside Call      Outside Call
                 Active?                n                n
                   Busy?                y                y
           Don't Answer?                y                y       Number of Rings: 2
                    All?                n                n
     DND/SAC/Goto Cover?                y                y

COVERAGE POINTS

    Terminate to Coverage Pts. with Bridged Appearance? n

      Point1: h150               Point2:                Point3:
      Point4:                    Point5:                Point6:
```

Figure 4-8. Example Subscriber Coverage Path Screen

2. Use the entries in the table below to complete the Coverage Path screen.

Table 4-10. Subscriber Coverage Path Screen Entries

Field	Entry
Coverage Path Number	Displays the coverage path number assigned to the coverage path when the **add coverage path** command is entered. This number should appear in the Coverage Path field on all subscriber station screens so that user stations will cover to the DEFINITY AUDIX voice ports.
Coverage Criteria	The conditions that, when met, cause the call to redirect to coverage. See Worksheet B-4 for the assigned conditions. The following conditions are suggestions.

Table 4-10. Subscriber Coverage Path Screen Entries — *Continued*

Field	Entry	
Station/Group Status	Inside Call	Outside Call
Active?	**n**	**n**
Busy?	**y**	**y**
Don't Answer?	**y**	**y**
All?	**n**	**n**
SAC/Go to Cover?	**y**	**y**
Linkage	This is a display-only field that shows up to two additional coverage paths, when assigned, that the Next Path Number field entry is linked to.	
Next Path Number	Optional. Enter the number of the coverage path to which a call will be redirected in case of coverage failure at the current path.	
Number of Rings	The number of rings (**1** through **99**). Three rings (default) is the recommended timing. This is the number of rings a user's voice terminal will ring before the switch sees a *no answer* condition and sends the call to the first coverage point. See Worksheet B-4.	
Coverage Points	The Call Coverage Paths for Point1, Point2, or Point3. Enter **h** followed by the DEFINITY AUDIX hunt group number assigned in Task 4-7.	

3. Press ENTER.
4. Continue with Task 4-6.

Task 4-6: Administering the Voice Ports as Stations

In the following procedure, you will administer each of the DEFINITY AUDIX system voice ports. Administer all 12 voice ports regardless of how many ports were purchased. The DEFINITY AUDIX system uses the unconfigured ports for message waiting indicator updates, switch audits, and time/date requests.

NOTE:
Before you administer the voice ports, you must first define at least one Class of Service (COS) and one Class of Restriction (COR) to be used exclusively by the voice ports. To administer these changes, see the DEFINITY documentation for your switch.

Information for completing the screens described in this section is available from Appendix B. The project manager completed this worksheet with the customer during the planning phase for the DEFINITY AUDIX system.

There are four subtasks for administering a DEFINITY AUDIX voice port.

- Completing the Station Screen
- Assigning the Call Appearance Buttons
- Assigning the Feature Buttons
- Assigning the Display Buttons

Rules for Administering the Voice Ports

Use the following rules when administering the voice ports:

- Administer all 12 ports regardless of how many ports were configured for the system.
- Administer voice port 12 first with 10 call appearances.
- Administer voice ports 1 through 4, each with10 call appearances.
- Set the `Restrict Last Appearance` field to **y** for voice port 12 and voice ports 1 through 4.
- Type the port names in capital letters. Type the name **AUDIX** for all ports except voice port 11. Type **AUDIX TRANSFER** for voice port 11.
- Set the `Restrict Last Appearance` field to **n** for voice ports 5 through 11.
- Bridge button 10 of voice ports 5 through 11 to button 10 of voice port 12.

Task 4-6A: Completing the Station Screen

Refer to Worksheet B-1 for the information required to complete the screens.

Voice port 12 must be administered first, because voice ports 5 through 11 have a bridged call appearance to voice port 12. Voice ports 1 through 4 have the same options as voice port 12, only the `Name` and `Port` fields are different.

Complete the following steps to administer voice port 12:

1. At the switch administration terminal, enter **add station *extension*** to add voice port 12. The extension number must be the same length as the DEFINITY AUDIX system subscriber extension numbers. Extension numbers cannot start with 0.

   The switch displays the Station screen.

   The following figures show examples of the Station screen for ports 1 to 4 and port 12.

```
change station 60012                                          Page 1 of 5     SPE B

                                     STATION
       Extension: 60012           Lock Messages?  n               BCC: 0
             Type: 7405D          Security Code:                  TN: 1
             Port: 1B0512        Coverage Path 1: 5               COR: 5
             Name: AUDIX 12      Coverage Path 2:                 COS: 5

        STATION OPTIONS
              Data Module? n
          Display Module? y
                                                        Feature Module? n
```

Figure 4-9. Example of a Station Screen - Page 1 (Port 12 and Ports 1 to 4)

```
change station 60012                                          Page 2 of 5     SPE B

                                      STATION
FEATURE OPTIONS
            LWC Reception: spe
           LWC Activation? y                          Coverage Msg Retrieval? y
              CDR Privacy? n                                     Auto Answer: none
    Redirect Notification? n                                Data Restriction? n
                                                   Idle Appearance Preference? n
    Bridged Call Alerting? n
   Active Station Ringing? single                    Restrict Last Appearance? y



               AUDIX Name: audix
    Messaging Server Name:                            Audible Message Waiting? n
                                                   Display Client Redirection? y
                                                 Select Last Used Appearance? n
```

Figure 4-10. Example of a Station Screen - Page 2 (Port 12 and Ports 1 to 4)

The following figures show examples of the Station screen for ports 5 through 10.

```
change station 60005                                          Page 1 of 5     SPE B

                                     STATION
        Extension: 60005          Lock Messages?  n               BCC: 0
             Type: 7405D           Security Code:                  TN: 1
             Port: 04B1305       Coverage Path 1: 5               COR: 5
             Name: AUDIX 5       Coverage Path 2:                 COS: 5

        STATION OPTIONS
              Data Module? n
           Display Module? y
                                                        Feature Module? n
```

Figure 4-11. Example of a Station Screen - Page 1 (Ports 5 through 10)

```
change station 60005                                          Page 2 of 5     SPE B

                                       STATION
FEATURE OPTIONS
            LWC Reception: spe
           LWC Activation? y                          Coverage Msg Retrieval? y
              CDR Privacy? n                                     Auto Answer: none
    Redirect Notification? n                                Data Restriction? n
                                                     Idle Appearance Preference? n
    Bridged Call Alerting? n
   Active Station Ringing? single                      Restrict Last Appearance? n



               AUDIX Name: audix
    Messaging Server Name:                              Audible Message Waiting? n
                                                     Display Client Redirection? y
                                                   Select Last Used Appearance? n
```

Figure 4-12. Example of a Station Screen - Page 2 (Ports 5 through 10)

The following figure shows an example of the Station screen for port 11.

```
change station 60011                                        Page 1 of 5     SPE B

                                          STATION
        Extension: 60011                     Lock Messages? n               BCC: 0
             Type: 7405D                     Security Code:                  TN: 1
             Port: 04B1311                 Coverage Path 1: 5               COR: 5
             Name: AUDIX TRANSFER          Coverage Path 2:                 COS: 5

        STATION OPTIONS
              Data Module? n
           Display Module? y
                                                                 Feature Module? n
```

Figure 4-13. Example Station Screen - Page 1 (Port 11)

```
change station 60011                                        Page 2 of 5     SPE B

                                        STATION
FEATURE OPTIONS
            LWC Reception: spe
           LWC Activation? y                          Coverage Msg Retrieval? y
              CDR Privacy? n                                     Auto Answer: none
    Redirect Notification? n                                Data Restriction? n
                                                  Idle Appearance Preference? n
    Bridged Call Alerting? n
   Active Station Ringing? single                   Restrict Last Appearance? n



               AUDIX Name: audixcl
    Messaging Server Name:                             Audible Message Waiting? n
                                                  Display Client Redirection? y
                                                 Select Last Used Appearance? n
```

Figure 4-14. Example Station Screen - Page 2 (Port 11)

2. Use the entries in the table below to complete the Station screen entries for each port.

NOTE:
Some of the entries in the table might be on page 2 of the Station screen for your switch. Press NEXTPAGE and PREVPAGE to move between the two screens.

Table 4-11. Station Screen Entries

Field	Entry
Extension	A valid extension number (3 to 5 digits) that agrees with the dial plan. Each voice port needs a unique extension number. It is suggested that the number used for the AUDIX TRANSFER extension be an easy number to remember. Obtain the extension from Worksheet B-1.
BCC	Bearer Capability Class is a display-only field set to 0 (default) for stations. (This value indicates voice or voice-grade data.) This field is only displayed when the ISDN-PRI option is enabled on the switch System-Parameters Customer-Options screen.
Type	Select one of the following: **7405D** (G3V1-V4/R5/R6) **ADX16D** (G3R7 or greater)
Lock Messages	**n**
COR	Select a Class of Restriction (COR) used exclusively by the voice ports. The COR should provide security for the voice ports that reflects the desired restriction. Obtain the COR from Worksheet B-1.
Port	The digital port equipment location of the DEFINITY AUDIX system TN568 circuit pack on the switch. Enter 5 to 7 characters (for example, **01A0501**). Obtain the port number from Worksheet B-1. ■ The first character identifies the cabinet. The default is **1** if there is no entry. Valid entries are **1, 2, or 3.** The next character identifies the carrier (**A**, **B**, **C**, **D**, or **E**). The next two characters identify the slot number in the carrier (**01** to **20** for multi-carrier cabinets or **01** to **18** for single-carrier cabinets. The DEFINITY AUDIX system occupies two slots in the switch. Enter the number of the second slot. Slot 2 is occupied by the TN568 DEFINITY AUDIX system circuit pack. ■ The last two characters identify the circuit number. Valid entries are **01** to **12**. Assign the first voice port to circuit 01, the second to circuit 02, etc. Voice port 11 should have the name **AUDIX TRANSFER**.
Security Code	Leave this field blank.

Table 4-11. Station Screen Entries

Field	Entry
COS	Select a Class of Service (COS) used exclusively by the voice ports. The COS must only allow access to the features Call Forwarding All Calls and Data Privacy (indicated by *y*). All other features for the COS should be set to *n*. Obtain this from *Worksheet B-1*.
Name	**AUDIX** *x* where *x* equals the circuit number of each port except port 11, or enter any other name beginning with AUDIX. Enter the name **AUDIX TRANSFER** (all capital letters) for voice port 11. The extension number of voice port 11 is used with the Transfer Into Mailbox feature. Obtain the name from *Worksheet B-1*.
Coverage Path	Enter the same Coverage Path number you created for the voice ports in Task 4-4. This coverage path should cover all calls to the DEFINITY AUDIX hunt group. Obtain this number from Worksheet B-1.
LWC Reception	Use the default value
LWC Activation	**y** The DEFINITY AUDIX system uses the Leave Word Calling (LWC) switch feature to light and extinguish message waiting indicators (MWIs) on user's voice terminals.
SMDR or CDR Privacy	**n**
Redirect Notification	**n**
Per Button Ring Control	**n**
Bridged Call Alerting	**n**
Data Module	**n**
Display Module	**y** To operate as a digital voice port, the DEFINITY AUDIX software requires an optional display module.
Auto Select any Idle Appearance	**n**
Coverage Message Retrieval	**y** The DEFINITY AUDIX system does not use this feature at present but may use it in the future.
Auto Answer	**n**

Table 4-11. Station Screen Entries

Field	Entry
Data Restriction	**n**
Idle Appearance Preference	**n**
Restrict Last Appearance	**n** for voice ports 5 through 11. **y** for voice ports 1 through 4 and port 12. Call appearance 10 on voice port 12 should not receive incoming calls since other voice ports have a bridged appearance to call appearance 10 of voice port 12. An incoming call to this appearance would cause all voice ports to ring.
Feature Module	**n**
Coverage Module	**n**
Disp Client Redir	Displayed if the switch Hospitality feature is activated. Enter **y** for the voice port to answer calls from stations with a COS having the Client Room option.
Display Language	**English** (or others, as purchased)
Select Last Used Appearance	**n**
Active Station Ringing	**single**
H.320 Conversion	**n** (G3V6 or greater)
TN	Tenant Partition Number. Default is 1.
AUDIX Name	Enter the name assigned on the User Defined Adjunct Names screen in Task 4-2.
Messaging Server Name	Name of the server as it appears on the User Defined Adjunct Names screen (R5r or greater) or leave blank.
Audible Message Waiting	**n**

3. Press NEXTPAGE

   Page 2 of the Station screen appears.

4. Continue with Task 4-6B.

Task 4-6B: Assigning the Call Appearance Buttons

1. Press NEXTPAGE if needed to display the Call Appearances screen.

```
add station 60012                                          Page 3 of 5     SPE A

                                        STATION
   SITE DATA
         Room:                                                      Headset? n
         Jack:                                                      Speaker? n
        Cable:                                                     Mounting: d
        Floor:                                                  Cord Length: 0
     Building:                                                    Set Color:



ABBREVIATED DIALING
     List1:                      List2:                      List3:

BUTTON ASSIGNMENTS
   1: call-appr                              6: call-appr
   2: call-appr                              7: call-appr
   3: call-appr                              8: call-appr
   4: call-appr                              9: call-appr
   5: call-appr                             10: call-appr
```

Figure 4-15. Example Call Appearances (Port 12 and Ports 1- 4)

```
add station 60005                                          Page 3 of 5     SPE A

                                        STATION
   SITE DATA
         Room:                                                      Headset? n
         Jack:                                                      Speaker? n
        Cable:                                                     Mounting: d
        Floor:                                                  Cord Length: 0
     Building:                                                    Set Color:



ABBREVIATED DIALING
    List1:                      List2:                      List3:

BUTTON ASSIGNMENTS
   1: call-appr                             6: call-appr
   2: call-appr                             7: call-appr
   3: call-appr                             8: call-appr
   4: call-appr                             9: call-appr
   5: call-appr                            10: brdg-appr   Btn: 10   Ext: 60012
```

Figure 4-16. Example Call Appearances (Ports 5– 11)

- For ports 1 through 4 and port 12, set all ten BUTTON ASSIGNMENTS to **call-appr**
- For ports 5 through 11, do the following:
  a. Set the first nine BUTTON ASSIGNMENTS to **call-appr**
  b. Set the tenth BUTTON ASSIGNMENTS to **brdg-appr Btn: 10 Ext: *XXXX*** where *XXXX* is the extension number of voice port 12.

NOTE:
Older switches do not allow you to duplicate ports with bridged appearances. If your switch doesn't allow this operation, remove the bridged appearance from port 5 before you duplicate it. Then add the bridged appearance when you administer each of the voice ports.

2. Continue with Task 4-6C.

Task 4-6C: Assigning the Feature Buttons

1. Press NEXTPAGE

   The next page of the Station screen appears.

```
add station 60012                                   Page 4 of 5     SPE A
                                        STATION

         FEATURE BUTTON ASSIGNMENTS

           1: lwc-store                                13:
           2: lwc-cancel                               14:
           3: aux-work     RC:       Grp: 150          15:
           4:                                          16:
           5:                                          17:
           6:                                          18:
           7:                                          19:
           8:                                          20:
           9:                                          21:
          10:                                          22:
          11:                                          23:
          12:                                          24:
```

Figure 4-17. Example of a Feature Button Assignments Screen

2. Assign the following feature buttons on the FEATURE BUTTON ASSIGNMENTS portion of the Station screen:
   1. **lwc-store**
   2. **lwc-cancel**
   3. **aux-work RC: Grp: *XXX***, where *XXX* is the number of the DEFINITY AUDIX Hunt Group assigned in Task 4-3. Obtain the Hunt Group number from Worksheet B-2.
   4. Continue with Task 4-6D.

Task 4-6D: Assigning the Display Buttons

1. Press NEXTPAGE until the DISPLAY BUTTON ASSIGNMENTS page appears.

```
change station 60012

            Page 5 of 5     SPE A


                                    STATION

  DISPLAY BUTTON ASSIGNMENTS

   1: normal
   2: inspect
   3: date-time
   4: directory
   5: cov-msg-rt
   6: next
   7: delete-msg
```

Figure 4-18. Display Button Assignments Screen

2. Assign the display buttons on the Display Button Assignments screen as shown above.
3. Press [ENTER] to complete the Station screen.
4. Continue with Task 4-6E.

Task 4-6E: Duplicating the Stations

1. Duplicate port 12 using the duplicate function of your administration tool to create ports1 through 5.

   For example, enter **duplicate station *extension***

   where *extension* is the extension for voice port 12.
2. Type the Extension, Port and Name field for each voice port created.
3. Press [ENTER] to save the new voice ports.
4. For voice port 5,enter **change station *extension,*** where *extension* is the extension of the voice port.
5. Change the `Restrict Last Appearance field to` **n** (Task 4-6A), and bridge button 10 of voice port 5 to button 10 of voice port 12 (Task 4-6B).
6. Duplicate port 5 to create ports 6 through 11.

NOTE:
Older switches do not allow you to duplicate ports with bridged appearances. If your switch doesn't allow this operation, remove the bridged appearance from port 5 before you duplicate it. Then add the bridged appearance when you administer each of the voice ports in Step 7.

7. Type the Extension, `Port` and `Name` field for these voice ports. Voice port 11 has the name AUDIX TRANSFER.
8. Press [ENTER] to save the new voice ports.
9. To verify that the voice ports exist on the switch, enter **list station** *xxxxx* **count** *y*

   where *xxxxx* is the extension of voice port 1, and *y* is the number of ports you created.

   For example, **list station 55555 count** 12.

   NOTE:
   This command works only if the voice port extensions are in sequence (for example, 84444, 84445, 84446, and so on). Otherwise, you may use **list station** *extension*.

10. Continue with Task 4-7.

Task 4-7: Assigning Voice Ports to the Hunt Group

The DEFINITY AUDIX system has an even-number of ports (between 2 and 12) purchased by the customer. Place the number of ports the customer purchased into a hunt group starting with port 1. For example, if the customer purchased four ports, place ports 1, 2, 3, and 4 into the hunt group. Do not assign more than the number of ports purchased to the hunt group since the DEFINITY AUDIX system answers calls only on ports configured for the system. If you assign more than the number of ports purchased, some calls to the DEFINITY AUDIX system will go unanswered.

NOTE:
As an option, you can run the Expert Agent Selection program to automatically set up the Hunt Group. Use the instructions in Chapter 6, "Optional Switch Feature Administration", Expert Agent Selection (EAS), instead of setting up the hunt group as described in this section.

To assign the voice ports to a hunt group, use the following procedure:

1. At the switch administration terminal, enter **change hunt-group** ***number***

   where *number* is the number of the hunt group you assigned in Task 4-3.

The Hunt Group screen displays.

2. Press NEXTPAGE twice.

   The switch displays the Group Member Assignments portion of the Hunt Group screen.

```
change hunt-group 150                                          Page 3 of 41     SPE B
                                          HUNT GROUP
        Group Number: 150      Group Extension: 69999       Group Type: ucd
 Member Range Allowed: 1 - 999          Administered Members (min/max): 1 /8
                                              Total Administered Members: 8

GROUP MEMBER ASSIGNMENTS
     Ext     Name                                Ext      Name
  1: 60011   AUDIX 1                        14:
  2: 60012   AUDIX 2                        15:
  3: 60013   AUDIX 3                        16:
  4: 60014   AUDIX 4                        17:
  5: 60015   AUDIX 5                        18:
  6: 60016   AUDIX 6                        19:
  7: 60017   AUDIX 7                        20:
  8: 60018   AUDIX 8                        21:
  9: 60019   AUDIX 9                        22:
  10:60020   AUDIX 10                       23:
  11:60021   AUDIX TRANSFER                 24:
  12:60022   AUDIX 12                       25:
  13:                                       26:

At End of Member List
```

Figure 4-19. Example of the Hunt Group Screen — Group Member Assignments

NOTE:
The voice port names do not appear while you are adding the hunt group members. The next time you access this screen, the names will be displayed.

3. Use the entries in the table below to assign voice ports to a hunt group. Enter only the ports configured for the DEFINITY AUDIX system.

Table 4-12. Hunt Group Screen — Group Member Assignments Entries

Field	Description
Group Number	Group number assigned on page 1 of the Hunt Group screen.
Group Extension	Group extension assigned on page 1 of the Hunt Group screen.
Group Type	Group type assigned on page 1 (**ucd**).
Ext	The extensions of the DEFINITY AUDIX voice ports. Enter them in the same order they were assigned to the voice ports. The order must match the order on the DEFINITY AUDIX system Voice Group screen. Enter only the ports the customer purchased. For example, if the system has four configured ports, enter the extensions and names for ports 1, 2, 3, and 4. Obtain the extensions from Worksheet B-1.
Name	This is a display-only field. The voice port names are displayed the next time you access this screen.

4. Press ENTER to save the hunt group.
5. Write down the Group Number of the DEFINITY AUDIX hunt group. You enter this number in other switch administration screens.
6. Continue with the first task that applies.
   - If installing digital networking, continue with Task 4-8
   - If installing a control link, continue with Task 4-9.

Task 4-8: Administering the Digital Networking Port (Optional)

Refer to the information you received from the design center when completing the switch administration.

NOTE:
Digital networking is only possible with digital port emulation.

Before administering the Digital Networking port, you must know the extension of the first voice port for the local DEFINITY AUDIX system.

To administer the networking port:

1. At the switch administration terminal, enter **change station *extension***, where *extension* is the extension number of the first voice port.

   The switch displays the first page of the Station screen.
2. Enter **y** in the Data Module field.

This adds a Data Module screen for the station.

3. Press NEXTPAGE until the Data Module screen displays.

```
change station 31001                                          Page 6 of 6     SPE B

                                    STATION


DATA MODULE
     Data Extension: 31024             Name: networking port 1             BCC: 2
                                        COS: 1
                                        COR: 1
                ITC: restricted          TN: 1

ABBREVIATED DIALING
  List:

SPECIAL DIALING OPTION


ASSIGNED MEMBER ( Station with a data extension button for this data module )

         Ext       Name

     1:
```

Figure 4-20. Example of a Station Screen Data Module Page

4. Change each of the following fields as indicated:
   - `Data Extension` field - enter a unique extension from the switch dialing plan.
   - `Name` field - enter a name that identifies the networking port.
   - `COR` field - enter a value for COR in which:
     - Data Privacy = y
     - Calling party restriction = N
     - Called party restriction = N
     - The FRL is greater than or equal to the FRL of the trunk
   - `COS` field - enter the same value as you assigned to the voice ports.
5. Press ENTER to save the changes.

6. See *DEFINITY AUDIX System — Digital Networking*, 585-300-534, Chapter 9, “Initial Network Administration and Acceptance Tests”, for instructions to complete the switch administration for digital networking.
7. Continue with Task 4-9.

Task 4-9: Assigning the Data Link

The data link connects the DEFINITY AUDIX system TN568 circuit pack to the Generic 3r Packet Gateway (PGATE) board (TN577). The TN577 is a BX.25 protocol interface between the switch and the DEFINITY AUDIX system. The BX.25 data module is a port on the PGATE board which acts as a protocol converter and packet handler. It provides RS-449 (electrical) and RS-232 (physical) connectivity.

NOTE:
A data link is required with analog emulation. A data link is optional with digital emulation, and depends on the features required on the DEFINITY AUDIX system.

Complete this task if the DEFINITY AUDIX system connects to the switch using any of the hardware below:

- A direct cable (A direct cable can only be used if the PGATE card is in the same cabinet as DEFINITY AUDIX.)
- An Isolating Data Interface (IDI)
- A private line facility using two Data Service Units (DSUs)

NOTE:
If the distance between the switch and the DEFINITY AUDIX system in a remote module is over 400 feet, two Modular Processor Data Modules (MPDMs) are needed to complete the connection. Refer to Appendix J for instructions.

Complete the following subtasks to assign the data link:

- Task 4-9A - "Assigning the PGATE Board"
- Task 4-9B - "Assigning the X.25 Data Module"
- Task 4-9C - "Assigning the Interface Link"
- Task 4-9D - "Assigning the Processor Channel"

Task 4-9A: Assigning the PGATE Board

This task assigns a PGATE board. You do not need to perform this task if the PGATE board has been administered previously on the switch. Refer to Worksheet B-8a for information required to administer the PGATE board.

Use the following procedure to complete the Packet Gateway Board screen.

1. At the host switch, enter **add pgate *board location***

   where *board location* is the 5 or 6 character identifier of the slot in which the pgate board is installed.

   The Packet Gateway Board screen appears

```
add pgate 02c14                                                        SPE B

                                 PGATE BOARD

      Board Location: 02c14                                  Name: audix
         Application: x.25
 External Cable Type: rs232
  Port Configuration: 1) RS232          2)RS232          3)RS232          4)RS232



Command:
```

Figure 4-21. Packet Gateway Board Screen

2. Use the entries in the table below to complete the screen.

Table 4-13. Packet Gateway Board Screen Entries

Field	Description
Board Location	Enter five characters. The first two represent the cabinet (**01-22**). The third represents the carrier (**A-E**). The fourth and fifth are the slot number within the carrier (**01-20** for medium cabinets, **01-18** for small cabinets).
Name	Enter **AUDIX** or another descriptive name for the PGATE application
Application	A display-only field indicating that the communications protocol used to transmit messages over the PGATE is X.25.
External cable type	A display-only field indicating that RS232 is the type of physical interface being used between the PGATE port and the DEFINITY AUDIX system.
Port configuration	A display-only field indicating that the port is configured for RS232 communication.

3. Press ENTER.

Task 4-9B: Assigning the X.25 Data Module

This task assigns an X.25 Data Module in the G3r/R5r to communicate with the DEFINITY AUDIX system. The X.25 data module extension must correspond to an entry on the Interface Link screen in Task 4-9C. Refer to Worksheet B-8a, for the correct data module extension.

Use the following procedure to complete the Data Module screen:

1. At the switch administration terminal, enter **add data-module *spare extension***

   where *spare extension* is the extension number of the data module.

   The Data Module screen appears.

```
add data-module next                                          Page 1 of 2     SPE B

                                   DATA MODULE

    Data Extension: 60018             Name: audix
              Type: x.25                              Remote Loop-Around Test? n
              Port: 01A0501            COR: 1
         Baud Rate: 9600                TN: 1
     Endpoint Type: adjunct        DTE/DCE: dte                  Error Logging? n


      Permanent Virtual Circuit? y                 Highest PVC Logical Channel: 64
       Switched Virtual Circuit? n
```

Figure 4-22. Example Data Module Screen — Page 1

```
add data-module next                                          Page 1 of 2     SPE B

                                     DATA MODULE

    Data Extension: 60018              Name: audix
              Type: x.25                            Remote Loop-Around Test? n
              Port: 01A0501             COR: 1          Destination Number: external
         Baud Rate: 9600                 TN: 1        Establish Connection? n
     Endpoint Type: adjunct         DTE/DCE: dce              Error Logging? n
              Link: 16

      Permanent Virtual Circuit? y                  Highest PVC Logical Channel: 64
       Switched Virtual Circuit? n
```

Figure 4-23. Example Data Module Screen G3r, R7 — Page 1

2. Use the entries in the table below to complete the screen.

Table 4-14. Processor Interface Data Module Screen Entries

Field	Description
Data Extension	Displays the extension number assigned to the data module when the **add data-module** command is entered.
Type	**x.25**
Name	**AUDIX** or another name to identify the DEFINITY AUDIX system. This field is optional.
COR	The desired Class of Restriction for the data module. Obtain the COR from Worksheet B-8a.
Port	The seven-character PGATE port location to which the X.25 data module is connected (for example, 01A0501). Obtain the port number from Worksheet B-8a.

Table 4-14. Processor Interface Data Module Screen Entries

Field	Description
Endpoint Type	adjunct
DTE/DCE	dte
Baud Rate	9600
Remote Loop-Around Test?	**n**
Destination Number	**external** (R7 or greater)
Establish Connection?	**y** (R7 or greater)
Link	(R7 or greater) The Link field indicates the interface link number that connects to the DEFINITY AUDIX system. Use the following values: **1 to 16** (choose an unused link number) This link number will be entered in the `Interface Link` field in Task 4-9D.
Error Logging?	**n** Records the X.25 protocol errors in the G3r/R5r hardware error log.
Permanent Virtual Circuit	Default is **y** (cannot be changed).
Highest PVC Logical Channel	Default is **64** (cannot be changed).
Switched Virtual Circuit	Default is **n** (cannot be changed).

3. Press NEXTPAGE

   Page 2 of the Data Module screen appears.

```
add data-module next                                        Page 2 of 2     SPE B

                                   DATA MODULE

  LAYER 2 PARAMETERS
           Number of Outstanding Frames (w): 1
                 Retry Attempt Counter (N2): 2
                            Frame Size (N1): 135
   Retransmission (T1) Timer (1/10 seconds): 10
             Idle (T4) Timer (1/10 seconds): 30

  LAYER 3 PARAMETERS

    Number of Outstanding Packets: 2
    Restart (T20) Timer (seconds): 8
      Reset (T22) Timer (seconds): 10
```

Figure 4-24. Example Data Module Screen — Page 2

4. Use the entries in the following table to complete the fields on the screen:

Table 4-15. X.25 Data Module Screen Entries — Page 2

Field	Description
Number of Outstanding Frames (w)	**1** is recommended. This value specifies layer 2 window size (1 to 7 frames). If the value is 1, up to 1 frame can be sent without confirmation.
Retry Attempt Counter (N2)	Specifies the number of times (0 to 7) to send one frame when this frame is not confirmed for a period of time; default is 2.
Frame Size (N1)	Specifies the number of bytes (135 or 263) in a frame; default is 135. If the value is 135, there can be up to 1080 bits within a frame. This value is suitable for all adjuncts and for DCS.
Retransmission (T1) Timer (1/10 seconds)	The T1 timer is started at the beginning or the end of the transmission of a frame. At the end of this timer (0-250), retransmission of a frame will be initiated according to the procedures for link set up and disconnection or information transfer; default is 10.
Idle (T4) Timer (1/10 seconds)	The T4 timer is a system parameter that represents the time a DTE will allow without frames being exchanged on the data link (0 to 250); default is 30.
Number of Outstanding Packets	Specifies the number of packets (2 to 7) that can be sent without confirmation; default is 2.
Restart (T20) Timer (seconds)	The T20 timer is a DTE time limit (0 to 500) started when DTE issues a restart indication and terminated when the restart request is received or confirmed; default is 8.
Reset (T22) Timer (seconds)	The T22 timer is a DTE time limit (0 to 500) started when DTE issues a reset indication and terminated when the reset request is received or confirmed; must be 10 for the DEFINITY AUDIX system.

5. Press [ENTER].
6. Determine the next step:
   - If the switch is R7 or greater, continue with Task 4-9D.
   - If the switch is R6 or less, continue with Task 4-9C.

Task 4-9C: Assigning the Interface Link

The Interface Link screen is used to identify, describe, and enable interface links. The interface link provides a physical interface between the switch and the DEFINITY AUDIX system.

Change the Interface Links screen to add the data module assigned in Task 4-9B. Complete this task for all data link configurations.

CAUTION:
Perform this step during off-hours only. This step causes an interface reset that affects all other links that may be made to the switch, such as Distributed Communications System (DCS), Applications Processor (AP), and Call Management System (CMS).

Use the following procedure to change the Interface Links screen:

1. Enter **change communication-interface links** at the switch administration terminal.

   The Interface Links screen appears.

Figure 4-25 shows a sample R5r Interface Links screen used to define the X.25 data module Interface Link that terminates on a port in the PGATE board.

```
change communication-interface links                          Page 1 of 1     SPE B

                            INTERFACE LINKS

                    X.25      Destination   Establish      Connected
 Link   Enabled  Extension     Number      Connection   Data Module   Identification
  1:      n
  2:      n
  3:      n
  4:      y        60019     external                                   audixcl
  5:      y        60550     external                       60551       cms
  6:      n
  7:      n
  8:      n
  9:      n
 10:      n
 11:      n
 12:      n
 13:      n
 14:      n
 15:      n
 16:      n
```

Figure 4-25. Example Interface Links Screen

2. Use the entries in the table below to complete the Interface Links screen.

Table 4-16. Interface Links Screen Entries

Field	Description
Link	This is a display-only field. The Link field indicates the interface link number that connects to the DEFINITY AUDIX system. Use the following values: **1 through 16** (choose an unused link number) This link number will be entered in the `Interface Link` field in Task 4-9D.
Enable	**y** You may not be able to set this field to y until you complete Task 4-9D.
Establish Connection	Leave this field blank.
Destination Number(S75)	**external**
Identification	Use the name entered on the User Defined Adjunct Names screen.
X.25 Extension	Enter the extension of the X.25 data module administered in Task 4-9B.
Connected Data Module	Leave this field blank.

3. Press ENTER.
4. Continue with Task 4-9D.

Task 4-9D: Assigning the Processor Channel

Complete a channel on the Processor Channel Assignment screen to assign the DEFINITY AUDIX system to a processor channel. Complete this task for all data link configurations. Choose an unused processor channel (1 to128). Refer to Worksheet B-8a for an appropriate channel number.

Use the following procedure to change the Interface Links Processor Channel Assignment screen:

1. Enter **change communication-interface processor-channels** at the switch administration terminal.

   The Processor Channel Assignment screen appears.

```
change communication-interface processor-channels            Page 1 of 8     SPE B

                           PROCESSOR CHANNEL ASSIGNMENT

   Proc                     Interface     Local     Remote     Adjunct
   Chan    Application    Link   Chan    Port      Port       Name     Machine-ID
     1:
     2:
     3:
     4:
     5:      mis           5      1       3          1
     6:      audix         4      6       6          6        audixcl       1
     7:
     8:
     9:
    10:
    11:
    12:
    13:
    14:
    15:
    16:
```

Figure 4-26. Example Processor Channel Assignment Screen

```
change communication-interface processor-channels            Page 1 of 8     SPE B

                           PROCESSOR CHANNEL ASSIGNMENT

   Proc                   Gtwy       Interface      Destination     Session     Mach
   Chan Enable   Appl.     To  Mode  Link/Chan    Node      Port   Local/Remote  ID
     1:
     2:
     3:   Y      audix            8    5002  holyoke        0        2    3     3
     4:   Y      audix            8    5002  meeker         0        2    7     7
     5:
     6:
     7:
     8:
     9:
    10:
    11:
    12:
    13:
    14:
    15:
    16:
```

Figure 4-27. Example Processor Channel Assignment Screen (G3R7)

2. Use the entries described in the table below to assign the DEFINITY AUDIX system to the processor channel.

Table 4-17. Processor Channel Assignment Screen Entries

Field	Description
Proc Chan	This field is display only and identifies each of the processor channels. Choose an unused processor channel (1 to 128), and complete the fields for that channel.
Appl., Application, or Node (R7)	**audix**
Interface Link	Enter the Link assigned in Task 4-9C.
Interface Channel	The logical channel of the interface link. This entry must match the entry in the AUDIX Port Logical Channel field on the DEFINITY AUDIX Switch-Link DCIU-SCI screen. Obtain the value from Worksheet B-8a

Table 4-17. Processor Channel Assignment Screen Entries — *Continued*

Field	Description
Machine-ID	The Machine-ID of the DEFINITY AUDIX system. This entry is typically **1** unless the DEFINITY AUDIX system is serving more than one switch in a DCS network. The Machine-ID must agree with the `AUDIX` field on the DEFINITY AUDIX Switch-Link DCIU-SCI screen.
Local Port or Local Session	Enter the Switch Port number used on the DEFINITY AUDIX Switch-Link DCIU-SCI screen. Obtain the number from Worksheet B-8a.
Remote Port or Remote Session	Enter the value entered for `Interface Channel` above. This is the same value entered for AUDIX Port Logical Channel on the DEFINITY AUDIX Switch-Link DCIU-SCI screen.
Adjunct Name or Destination Node	Enter the name defined on the switch User Defined Adjunct Names screen in Task 4-2 such as audix.
Mode (R7 only)	Leave blank.
Destination Port (R7 only)	Leave blank.

3. Press [ENTER].
4. If you were unable to set the `Enable` and `Establish Connection` fields to y in Task 4-9C, complete the following steps,
   a. Enter **change communication-interface links**
   b. Change the `Enable` and `Establish Connection` fields to **y**
   c. Press [ENTER] to save the changes.
5. If the link was busied out, release it.

The following table shows the field correlations between the switch Processor Channel Assignment screen and the DEFINITY AUDIX system Switch-Link DCIU-SCI screen. The field entries on these two screens must match as specified below.

Table 4-18. Switch and DEFINITY AUDIX System Correlations

Switch Processor Channel Assignment Screen Field	DEFINITY AUDIX Switch-Link DCIU-SCI Screen Field
Interface Channel Remote Port	Logical Channel
Local Port	Switch Port
Machine-ID	AUDIX

6. Continue with Chapter 5, "Initial Definity AUDIX Administration", to administer the DEFINITY AUDIX system.

Initial Definity AUDIX Administration

5

This chapter describes the initial tasks required to administer the DEFINITY AUDIX System.

The initial system administration tasks for the DEFINITY AUDIX system are:

Task 5-1 - "Perform Initial DEFINITY AUDIX Administration"

Task 5-2 - "Activate Parameters and Basic Features"

Task 5-3 - "Add Magneto-Optical Disks"

Task 5-4 - "Verify the Link"

Task 5-5 - "Check Alarm Status"

Worksheets Needed

Before beginning these tasks, make sure you have completed the following worksheets (included as appendices).

- Worksheet B-1: Administer the Voice Ports as Stations (Digital Port Emulation)
- Worksheet B-2: Assign the Hunt Group (Digital Port Emulation)
- Worksheet B-3: Assign the Call Coverage Path for Voice Ports (Digital Port Emulation)
- Worksheet B-4: Assign the Call Coverage Path for Subscribers (Digital Port Emulation)
- Worksheet B-5: Administer the Voice Ports as Stations (Analog Port Emulation)
- Worksheet B-6: Define the Hunt Group (Analog Port Emulation)
- Worksheet B-7: Assign the Hunt Group (Analog Port Emulation)
- Worksheet B-8a: Assign the Data Link (Control Link Integration for G3r Switches)

- Worksheet C-3: Assign the DEFINITY AUDIX Machine ID
- Worksheet C-4: Assign Switch Link Translations (Control Link Integration)
- Worksheet C-5: Set System Parameters Limits
- Worksheet C-6: Assign the Time Zone
- Worksheet C-7: Activate Parameters and Basic Features
- Worksheet C-8: Add Subscribers
- Worksheet C-9: Set Up Alarm Origination

Task 5-1: Perform Initial DEFINITY AUDIX Administration

The initial DEFINITY AUDIX administration tasks are:

- Set the DEFINITY AUDIX Clock
- Assign the Time Zone
- Assign the DEFINITY AUDIX Machine Parameters
- Run the Switch Translations Audit
- Administer Voice Ports
- Set Switch-Link Parameters
- Set System Parameters Limits
- Set System Parameters for INTUITY Message Manager
- Reboot the DEFINITY AUDIX System

Task 5-1A: Set the DEFINITY AUDIX Clock

1. At the login prompt, enter **craft**

   The system displays the Password prompt.

2. Enter **crftpw**

   The system displays the Enter terminal type prompt.

3. Enter one of the following:

   - 513 for the following terminals:
     - 513 BCT
     - 715 BCT
     - 610BCT with a 513 emulation package
     - 615 BCT with a 513 emulation package
     - PC with a 513 emulation package

NOTE:
Since 513 is the default, you can just press RETURN to select it.

- 4410 for the following terminals:
  - 4410
  - 5410 terminal
  - 610 BCT with a 4410 emulation package.
  - 615 BCT with a 4410 emulation package.
  - PC with a 4410 emulation package.
- 4425 for the following terminals:
  - 4425
  - 5425
- 5420 for the following terminals:
  - 5420
  - 4415
- g3-ma for a G3-MA terminal

The system displays the DEFINITY AUDIX command line.

4. Type **set time** and press RETURN.

   The system displays the Date and Time screen.

```
drmfb15      Active     Alarms:  m A  Thresholds: none                Logins: 2
set time                                                            Page 1 of 1
                                  DATE AND TIME

      Synchronize to Switch? y

                       Month: December       Day of the Month: 29
                        Year: 1998
                        Time: 14:45

      Synchronize to Switch Result:









enter command: set time
```

Figure 5-1. Date and Time screen

5. Move the cursor to the `Month` field and type the name (not the number) of the current month.
6. Move the cursor to the Day of the Month field and type the two digits of the current day of the month (not the day of the week). For example, type **08** if the current date is April 8.
7. Move the cursor to the Year field and type the full four digits of the current year.
8. Move the cursor to the Time field and type the current time in an *hh:mm* format (*hh* specifies the hour in military (24 hour) time, and *mm* specifies the minutes).
9. With the cursor at the Synchronize to Switch field, type **y**

   NOTE:
   If the switch clock does not display the correct time, set the switch clock before performing this task. See the appropriate switch document for the procedure to set the switch clock.

10. Press F3 (Enter) to save the changes.

11. Continue with Task 5-1B.

Task 5-1B: Assign the Time Zone

Use the information on Worksheet C-6 to perform this task.

1. With the cursor on the DEFINITY AUDIX command line, type **change switch-time-zone** and press RETURN.

   The system displays the Switch Time Zone screen

```
drmfb15     Active    Alarms:  m A  Thresholds: none                Logins: 2
change switch-time-zone                                            Page 1 of 1
                                SWITCH TIME ZONE

Switch      Time      Daylight          Switch      Time      Daylight
Number      Zone      Savings?          Number      Zone      Savings?

 1:          [ ]                          2:
 3:                                       4:
 5:          7          y                 6:
 7:                                       8:
 9:                                      10:
11:                                      12:
13:                                      14:
15:                                      16:
17:                                      18:
19:                                      20:


                              Host Switch:   5


enter command: change switch-time-zone
```

Figure 5-2. Switch Time Zone Screen

If the time zones of your associated switches have not been defined for your AUDIX system, only the columns of switch numbers appear. Complete Step 2 and Step 3 below for those switches that are part of your DEFINITY communications system network.

2. In the Time Zone column, enter a number that indicates how many time zones west of Greenwich, England, the indicated switch is located. In the screen above, the prime meridian introduces time zone zero, and time zone 7 is U.S. mountain time.

3. In the Daylight Savings column, enter **y** if the indicated switch is located in a region where daylight savings time is observed. Daylight saving time is observed if the time is adjusted by an hour in April and October to take advantage of more sunlight. If daylight savings time is not observed, enter **n** in this column.
4. Press F3 (Enter) to save the changes.

   NOTE:
   Changes in these values will not take effect until you reboot the system.

5. Continue with Task 5-1C.

Task 5-1C: Assign the DEFINITY AUDIX Machine Parameters

Use information from Worksheet C-3 to complete this task.

1. With the cursor on the DEFINITY AUDIX command line, enter **change machine**

   The system displays the Machine Profile screen.

```
drmfb15     Active    Alarms:  m A  Thresholds: none                Logins: 2
change machine                                                     Page 1 of 1
                              MACHINE PROFILE

Machine Name: drmfb15      Machine Type: audix          Location: local

 Voiced Name? n        Extension Length: 5
    Voice ID: 0       Default Community: 1

ADDRESS RANGES
    Prefix                   Start Ext.   End Ext.        Warnings
1:                           00000        99999
2:
3:
4:
5:
6:
7:
8:
9:
10:

enter command: change machine
```

Figure 5-3. Machine Profile screen

2. Move the cursor to the Machine Name field and type the new name to be assigned to this DEFINITY AUDIX system. The machine name must be from one to eight characters in length.
3. Verify that the Machine Type field displays `audix`. If not, move the cursor to that field and type audix
4. Move the cursor to the Extension Length field and type the number of digits that the extensions on this DEFINITY AUDIX system will have.
5. Move the cursor to the ADDRESS RANGES fields, and fill in the starting and ending switch extensions that will have coverage on this DEFINITY AUDIX system.
6. For the remaining fields, change only the fields whose values on Worksheet C-3 are different from the default.
7. Press the F3 (Enter) function key to save the changes.

NOTE:
If you are activating IMAPI, the LAN will not recognize the machine name until you reboot the system in Task 5-1I.

8. Continue with Task 5-1D.

Task 5-1D: Run the Switch Translations Audit

The switch translations audit examines and updates internal data used by the switch interface.

This audit takes a few seconds. Run the audit as described below.

1. With the cursor on the DEFINITY AUDIX command line, type **audit switch-translations** and press RETURN.

The system displays the Audit Results screen:

```
drmfb15     Active    Alarms:  m A  Thresholds: none                    Logins: 2
audit switch-translations
                              AUDIT RESULTS                 Date: 12/29/98 14:53

                 Audit Name            Result
                 Audit Switch Xlatins  P Passed



Command Successfully Completed
enter command:
```

Figure 5-4. Audit Results Screen

2. Press F3 (Enter) to begin the audit.
3. When the audit is complete, proceed to Task 5-1E. If the audit does not complete successfully, see *DEFINITY AUDIX System — Maintenance* book, 585-300-121, to troubleshoot the problem.
4. Continue with Task 5-1E.

Task 5-1E: Administer Voice Ports

The voice ports and extensions that you administer in this task must match the ports and extensions that you administered on the switch. See Worksheet B-1 for the correct values.

CAUTION:
If you administered a digital networking port in Chapter 4, you can only administer a maximum of 8 voice ports in this task, even if you administered 12 ports on the switch.

1. With the cursor on the DEFINITY AUDIX command line, type **change voice-group** and press RETURN.

   The system displays the Voice Group screen.

```
drmfb15     Active    Alarms:  m A  Thresholds: none                Logins: 2
change voice-group                                                 Page 1 of 1
                                   VOICE GROUP

          Member  Port    Extension           Member  Port    Extension

             1    01C0601 64001                 2    01C0602 64002
             3    01C0603 64003                 4    01C0604 64004
             5    01C0605 64005                 6    01C0606 64006
             7    01C0607 64007                 8    01C0608 64008
             9    01C0609 64009                10    01C0610 64010
            11    01C0611 64011                12    01C0612 64012

enter command: change voice-group
```

Figure 5-5. Voice Group Screen

2. With the cursor at the Port field, type the location identifier of the first port. The first two digits identify the switch cabinet, the third digit identifies the carrier, the fourth and fifth digit identify the slot number, and the last two

digits identify the port number. For example, if the DEFINITY AUDIX system board is in module 1, carrier C, slot 6, the first port location is 01C0601.

3. Move the cursor to the Extension field and type the extension number of the first port.
4. Repeat Steps 2 and 3 for each port the customer purchased. Following the example in Step 2, the second port location is 01C0602, and so forth.
5. Press F3 (Enter) to save the changes.
6. Continue with Task 5-1F.

Task 5-1F: Set Switch-Link Parameters

Perform the following steps for CL integration.

1. With the cursor on the DEFINITY AUDIX command line, enter **change switch-link**

   The system displays the Switch-Link DCIU-SCI screen.

```
drmfb15      Active     Alarms:  m A  Thresholds: none                Logins: 2
change switch-link                                                   Page 1 of 1
                          SWITCH LINK DCIU-SCI

       AUDIX Port                                  AUDIX Port
Switch  Logical    Switch  Data          Switch  Logical    Switch  Data
Number  Channel    Port    Link          Number  Channel    Port    Link
   1       [redacted]                       2
   3                                        4
   5       1       58      1                6
   7                                        8
   9                                       10
  11                                       12
  13                                       14
  15                                       16
  17                                       18
  19                                       20

      Host Switch: 5
            AUDIX: 8


enter command: change switch-link
```

Figure 5-6. Switch Link DCIU-SCI Screen

2. Enter values for the Host Switch and AUDIX fields from Worksheet C-3. The number entered in the Host Switch field must match the *Local PBX ID* administered on the switch.

   NOTE:
   If the Logical Channel, Switch Port, or Data Link fields display values for any of the 20 switch numbers (rows) on this screen, these fields must be cleared. Press F4 (Clear fields) before proceeding to the next step.

- Move the cursor to the Switch Number row corresponding to the host switch number that you entered in step 2, and enter values for the Logical Channel field, the Switch Port field, and the Data Link field from Worksheet B-8a.

  The Logical Channel, Switch Port, and AUDIX numbers must be the same as the corresponding numbers administered on the switch. These fields have different names on the switch screens. The field names on the switch screens corresponding to the DEFINITY AUDIX Switch Link screen field names are shown in the following table:

Table 5-1. Field-Name Correspondence — DEFINITY AUDIX System vs. Switch

DEFINITY AUDIX Switch-link DCIU-SCI Screen	Processor Channel Screen		Remote
	System 75, G1, G3i,s,vs	G3r	System 85/G2
AUDIX Port Logical Channel	Interface Channel, or Remote Processor Channel	Interface Channel, or Remote port	Remote port
Switch Port	Processor Channel	Local Port	Local Port
AUDIX	Machine ID	Machine ID	Machine ID

3. If the DEFINITY AUDIX System is operating in a DCS environment, repeat step 3 for each remote switch-node in the DCS network. See Worksheets B-9 through B-15 for the assigned field values.

   NOTE:
   DCS-related switch administration must be done in conjunction with this task for each switch in the DCS network.

4. Once you have entered values for these fields, press F3 (Enter) to save the changes.
5. Continue with Task 5-1G.

Task 5-1G: Set System Parameters Limits

This task is required only if the customer wants to use subscriber limits that are different from the defaults. Check Worksheet C-5 to determine if you need to change the system parameters limits. If not, determine the next step:

- If INTUITY Message Manager was purchased, continue with Task 5-1H.
- If INTUITY Message Manager was not purchased, continue with Task 5-1I.

If changes are indicated on the worksheet, perform the following steps.

1. With the cursor on the DEFINITY AUDIX command line, type **change system-parameters limits** and press RETURN**.**

   The system displays the System-Parameters Limits screen.

```
drmfb15     Active    Alarms:  m A  Thresholds: none                Logins: 2
change system-parameters limits                                    Page 1 of 1
                          SYSTEM-PARAMETERS LIMITS

MESSAGE LIMITS
Message Lengths, Maximum  (seconds): 1200   Minimum  (tenths of seconds): 10
  Messages,  Total In All Mailboxes: 50000            Awaiting Delivery: 5000

ADMINISTRATION LIMITS
  Subscribers,  Local: 1000     Administered Remote: 1000
Lists,  Total Entries: 50000       Lists/Subscriber: 100   Recipients/List: 250

LOG LIMITS
    Admin Log Entries: 1000





enter command: change system-parameters limits
```

Figure 5-7. System-Parameters Limits Screen

2. Move the cursor to each of the fields that is to be changed according to Worksheet C-5, and type the new system parameters limits.
3. Once you have changed all the fields, press F3 (Enter) to save the changes.
4. Determine your next step:

- If INTUITY Message Manager was purchased, continue with Task 5-1H.
- If INTUITY Message Manager was not purchased, continue with Task 5-1I.

Task 5-1H: Set System Parameters for INTUITY Message Manager

This task is required to activate and install the LAN options that allow INTUITY Message Manager to work.

1. Inform the LAN system administrator to add the AUDIX host name to the network domain name server. This allows users to access DEFINITY AUDIX by name when addressing the AUDIX system.
2. With the cursor on the DEFINITY AUDIX command line, enter **change system-parameters IMAPI-options**

   The system displays the System-Parameters IMAPI-Options screen.

   NOTE:
   The System Parameters IMAPI-Options screen cannot be accessed if INTUITY Message Manager was not purchased.

```
drmfb15      Active     Alarms:  m A  Thresholds: none                    Login:
change system-parameters imapi-options                                   Page 1
                        SYSTEM-PARAMETERS IMAPI-OPTIONS

         Maximum Number of ENABLED IMAPI Sessions: 32

                        Enable Check New Messages: y

                        Enable Deliver CA Message: n

                       Enable Voice File Transfer: y

                            IMAPI Session Timeout: 5

                                   LAN IP Address: 135.9.180.18

                                  LAN Subnet Mask: 255.255.255.0

                   Default LAN Gateway IP Address: 135.9.180.254

                                   Link Integrity: y

enter command: change system-parameters imapi-options
```

Figure 5-8. System-Parameters IMAPI-Options Screen

3. Move the cursor to the `Maximum Number of ENABLED IMAPI Sessions` field. The value in this field should be **32**
4. Move the cursor to the `Enable Check New Messages` field. Type **y**. This allows clients to check for new messages without the overhead of logging in. If left at **n,** automatic new message notification from INTUITY Message Manager is disabled.
5. Leave the value of the `Enable Deliver CA Message` field as **n**. Entering **y** enables the public class-of-service function.
6. Move the cursor to the `Enable Voice File Transfer` field. Enter **y** to enable the use of the personal folder and a sound card in INTUITY Message Manager and also to enable voice file transfer for all subscribers who have `IMAPI Voice File Transfer enabled`.
7. Move the cursor to the `IMAPI Session Timeout` field. This is the amount of time that a session can be inactive before the user is logged out of the mailbox. Intervals can be set in five-minute increments from 5 to 60 minutes. Leave it at **5**. After logging out, the user will have an active TCP/IP connection to the AUDIX server for 5 minutes.
8. Do not change the value in the `LAN IP Address` field. This is the IP address assigned to the AUDIX server by the LAN administrator.
9. Obtain the subnet mask number from the LAN administrator. Move the cursor to the `LAN Subnet Mask` field and type in a subnet mask number. Part of this number matches the network IP address, while the remaining part contains the host interface address. (Usually, *255.255.255.0* will work.)
10. Move the cursor to the `Default LAN Gateway IP Address` field and type in the default LAN gateway IP address. This is the LAN server address to which all unknown addresses will be sent for resolution. It is also supplied by the LAN administrator and has the same form as the LAN IP Address and subnet mask number.
11. Press [F3] (Enter) to save the changes.
12. When the IP, Subnet mask, and Gateway IP address fields are set, a call must be made to the underlying TCP/IP software to assign these numbers to the interface.
13. If you changed either the customer or IMAPI option settings, reboot the DEFINITY AUDIX system.
14. Continue with Task 5-1I.

Task 5-1I: Reboot the DEFINITY AUDIX System

1. With the cursor on the DEFINITY AUDIX command line, type **reset system reboot** and press [RETURN]**.**

   The system displays the Reset System Reboot screen.

```
drmfb15     Active    Alarms:  m A  Thresholds: none                Logins: 2
reset system reboot                                               Page 1 of 1
                              RESET SYSTEM REBOOT

WARNING - Pressing [Enter] now causes the system to be rebooted to the AUDIX
          state.  The reboot cannot be cancelled after [Enter] has been pressed.


          The reboot will be performed in a camp-on manner.

          Press [Cancel] to avoid doing the reboot.









enter command: reset system reboot
```

Figure 5-9. Reset System Reboot Screen

2. Press F3 (Enter) to begin the reboot.

   During the DEFINITY AUDIX system reboot, the LEDs indicate the various system states and the terminal screen displays a series of messages about the reboot. These messages include a login prompt, but do not log in yet.

3. Wait approximately 10 minutes for the DEFINITY AUDIX system to come up to the AUDIX state.

4. When the screen displays the following message,

   `OLDTRACELOG=/var/spool/audix/oldtrace`

   press F3 (Enter) to display the login prompt.

5. Login as **craft**.

   See Task 5-1A for the login procedure.

   If the system has completed the reboot, the Status line on the screen displays audix; if the system is still booting, the Status line displays Initializing to AUDIX. (You cannot continue until the Status line changes to audix.)

6. Once the reboot completes successfully, proceed to Task 5-2. If the reboot does not complete successfully, note the state indicated on the LEDs, and see the corresponding troubleshooting procedures in *DEFINITY AUDIX System — Maintenance*, 585-300-121, before continuing.

Task 5-2: Activate Parameters and Basic Features

This task is required if the customer indicates specific features to be activated. Check Worksheet C-7 to see if any features are to be activated. If no features are to be activated, skip to Task 5-3.

1. With the cursor on the DEFINITY AUDIX command line, type **change system-parameters features** and press RETURN.

   The system displays the System-Parameters Features screen

```
change system-parameters features                                    Page 1 of 4
                          SYSTEM-PARAMETERS FEATURES

LOG-IN PARAMETERS
         Login Retries: 3              Consecutive Invalid Attempts: 18
 System Guest Password: 12345                Minimum Password Length: 0

PASSWORD AGING LIMITS (DAYS)   Subscriber   Administrator
                                Mailboxes       Login
            Expiration Interval:    0           0   (0 disables expiration)
     Minimum Age Before Changes:    0           1
 sending-restExpiration Warning:    0 ssage sendi7  pr(0 disables warnings)ies
 thresholds           to administer message space thresholds and display status
INPUT TIME LIMITS (SECONDS)
        Normal: 60     Full Mailbox Timeout: 5     Wait (*W): 180
         Between Digits at Auto-attendent or Standalone Menu: 12  (3-12)

DISCONNECT OPTIONS
        Quick Silence Disconnect? n         Silence Limit? 30 (5-30 seconds)
           Tone Based Disconnect? n

enter command: change system-parameters features
```

Figure 5-10. System-Parameters Features Screen

2. Move the cursor to any of the fields to be changed on the first page. Use the information on Worksheet C-7 to type the values specified.
3. Press F7 (Next Page) to display page two of this screen.

```
change system-parameters features                                Page 2 of 4
                         SYSTEM-PARAMETERS FEATURES

MISCELLANEOUS PARA
         Broadcast Mailbox Extension: 32999
            System Prime Time, Start: 08:00      End: 17:00
               Weekly Backup Enabled? y      Locals Only? n
              Increment(1/s), Rewind: 1      Advance: 1

FEATURE ACTIVATION
                  Traffic Collection? y
 sending-reName Record by Subscriber? ysage sendi
 thresholMultiple Personal Greetings? ysage space thresholds and display status
              End of Message Warning? y      Warning Time (seconds): 15
             Priority on Call Answer? y

CALL TRANSFER OUT OF AUDIX
 Transfer Type: basic                        Transfer Restriction: subscribers
 Covering Extension: 32300

enter command: change system-parameters features
```

Figure 5-11. System-Parameters Features Screen (page 2)

4. Move the cursor to any of the features to be activated on page 2 and enter the appropriate data as specified on the worksheet.
5. Press F7 (Next Page) to display page three of this screen.

```
change system-parameters features                                    Page 3 of 4
                         SYSTEM-PARAMETERS FEATURES

ANNOUNCEMENT SETS
             System: us-eng                  Administrative:

RESCHEDULING INCREMENTS FOR UNSUCCESSFUL MESSAGE DELIVERY
 Incr 1: 0  days  0  hrs 5  mins      Incr 2: 0  days 0  hrs 15 mins
 Incr 3: 0  days  0  hrs 30 mins      Incr 4: 0  days 1  hrs 0  mins
 Incr 5: 0  days  2  hrs 0  mins      Incr 6: 0  days 6  hrs 0  mins
 Incr 7: 1  days  0  hrs 0  mins      Incr 8: 2  days 0  hrs 0  mins
 Incr 9: 7  days  0  hrs 0  mins      Incr10: 14idays 0  hrs 0  mins
 threshol

enter command: change system-parameters features
```

Figure 5-12. System-Parameters Features Screen (page 3)

6. Move the cursor to any of the fields and change announcement sets or change rescheduling increments as needed.
7. When you have completed all the changes, press F3 (Enter) to save the changes.
8. Press F3 (Enter) again.
9. If any of the features that you just activated require special administration as specified on Worksheet C-7, see the appropriate tasks in *DEFINITY AUDIX System — Administration*, 585-300-507, for details.
10. Proceed to Task 5-3.

Task 5-3: Add Magneto-Optical Disks

The DEFINITY AUDIX system order included two blank magneto-optical disk cartridges. In Task 2-6, you gave one of these disk cartridges to the system administrator or put it in a safe place for nightly backups. You should still have the second blank disk cartridge. This cartridge is for the first nightly backup.

1. Referring to Figure 5-13, insert the blank disk cartridge into the magneto-optical disk drive with the front face to the left.

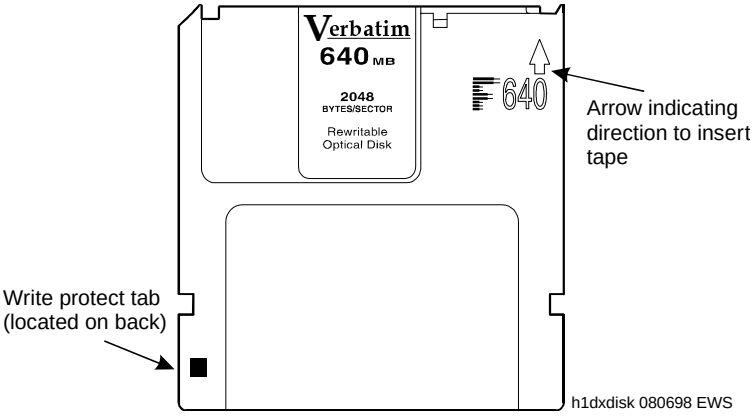

Figure 5-13. Magneto-Optical Disk Cartridge

2. At the terminal, type **add mo-disk** and press RETURN.

   The system displays the MO-Disk screen.

```
drmfb15     Active    Alarms:  m A  Thresholds: none                Logins: 2
add mo-disk                                                        Page 1 of 1
                                MO-DISK

 MO-Disk Drive Location: 01C0602

            Volume Type: backup

            Volume Name:

       Software Release: Release 4.0, Issue 1

           Machine Name: drmfb15

          Creation Date: 11/17/98

         Status of most recent "add mo-disk" operation: not run




Press [ENTER] to execute or press [CANCEL] to abort
enter command: add mo-disk
```

Figure 5-14. MO-Disk Screen

3. With the cursor on the `Volume Name` field, type the name of the backup.

4. Press F3 (Enter).

   The Message line displays the following message.

   ```
   This operation erases all existing mo-disk data.
   Press "ENTER" to confirm.
   ```

5. Press F3 (Enter) to begin the add mo-disk function.

   If you are adding an unformatted MO disk, this step could take up to 10 minutes. You will verify the status of the add mo-disk function in Task 10-1.

6. Continue with Task 5-4.

Task 5-4: Verify the Link

This task verifies that the switch-to-DEFINITY AUDIX system link is operational. Before it can be operational, you must assign the link at the DEFINITY AUDIX system.

If the DEFINITY AUDIX system link is not working, use the Maintenance manual for the appropriate switch and the following steps to diagnose the DEFINITY AUDIX system link. Substitute the brackets below with the Interface Link assigned in Task 4-9C*:*

Perform the following steps at the switch administration terminal.

1. At the switch administration terminal, make sure the time and date have been set correctly. If not, enter **set time** to correct them.
2. Enter **status link *n*** to verify that the DEFINITY AUDIX system link has been established. Under `LOCAL/REMOTE PROCESSOR CHANNELS`, `[ ]/X` should appear (where `[ ]` is the Interface Link number and `X` is the Interface Channel number assigned in Task 4-9D).
3. If the Link status is *not connected*:
   a. Enter **test link *x* r 1**

      where *x* is the number of the link.

      - If this test fails, follow the procedures in the switch maintenance manual.
      - If this test passes and the link status does not display, call the remote support center.

If the Link status is *connected* but the `[ ]/X` does not display under `LOCAL/REMOTE PROCESSOR CHANNELS`, verify the DEFINITY AUDIX system AUDIX Port Logical Channel and Switch Port translations.

4. Continue with Task 5-5.

Task 5-5: Check Alarm Status

1. With the cursor on the DEFINITY AUDIX command line, type **display alarms** and press RETURN**.**

   The system displays the Alarm Report screen.

```
drmfb15     Active    Alarms:  m A  Thresholds: none                    Logins: 2
display alarms                                                        Page 1 of 1
                                   ALARM REPORT

   The following options control which alarms will be displayed.

  ALARM TYPES
         Active? y              Resolved? n
          Major? y                 Minor? y                Warning? y


     Start Date:   /  /             Time:   :


  Resource Type:                Location:              Fault code:




enter command: display alarms
```

Figure 5-15. Alarm Report Screen

2. Check the ALARM TYPES fields for any active alarms. To do so, type **y** in each of the following fields:
   - `Active`
   - `Major`
   - `Minor`
   - `Warning`
3. Press F3 (Enter) to display the active alarms.
4. Resolve all active alarms. See *DEFINITY AUDIX System—Maintenance* book, 585-300-121, for the procedures for identifying and resolving the alarms.

Optional Switch Feature Administration

6

This chapter describes the optional switch administration for the DEFINITY AUDIX system that may be needed to tailor the DEFINITY AUDIX system to specific customer requirements. The following options are described:

- Automated Attendant Administration

  An Automated Attendant is a DEFINITY AUDIX system feature that provides the caller with a menu of options. The caller then can request a department or extension, for example, by pressing a touch tone key. An Automated Attendant extension and, optionally, a hunt group must be administered on the switch. The Automated Attendant extension should cover immediately to the DEFINITY AUDIX hunt group defined in Task 4-7.

- Automated Attendant Substitute Strategies

  A substitute for the automated attendant is needed so that calls do not go unanswered when the DEFINITY AUDIX system is busy.

- Transfer into AUDIX

  This feature allows an attendant or other party to transfer a caller back to the DEFINITY AUDIX system to record a message. This feature is useful when the caller is either sent to coverage or otherwise redirected from DEFINITY AUDIX.

- Switch Recorded Announcement

  This announcement is heard when all the DEFINITY AUDIX system voice ports are busy and calls start entering the system queue. Additional hardware is needed to activate this option.

- Switch Multiple Coverage Paths

  Multiple coverage paths provide greater flexibility for call-answer treatment and must be administered on the switch.

- Listed Directory Number (LDN) Night Destination

  The DEFINITY AUDIX hunt group can receive calls to listed directory numbers when the switch is in night service mode.

- Expert Agent Selection (EAS)

The DEFINITY AUDIX hunt group can be administered for EAS. EAS allows switch measurement data to be collected for each voice port.

Worksheets Needed

Before beginning these tasks, make sure you have completed the following worksheets (included as appendices).

- Worksheet D-2: Automated Attendant
- Worksheet D-5: Administering Switch Recorded Announcement

Automated Attendant Administration

Automated Attendant is a DEFINITY AUDIX system feature that provides the caller with a voice menu of options. The caller then can press a touch tone key to select an option such as a department or extension. Procedures for administering an automated attendant at the switch vary depending on whether the switch is a System 75 R1V3, a DEFINITY G1, or a DEFINITY Generic 3. Use the procedures described in this section to administer an automated attendant at the switch.

Generic 3, Version 2 and Greater Switches

With Generic 3, Version 2 and greater switches, you can either assign a phantom station on the switch for each main attendant or assign a new hunt group that forwards calls to the DEFINITY AUDIX hunt group.

Assigning a Phantom Station

Assign a phantom station on Generic 3, Version 2 for each main attendant. These switches do not require a physical port for a phantom station, but a switch alarm is not generated when a physical voice terminal is absent.

Use the following procedure to assign a phantom station for a main attendant.

1. Complete a station screen for the phantom station using **add station *xxxx*** or **add station next** (see Task 4-6 in Chapter 4 for details). Obtain the station type and extension number from Worksheet D-2. In the `Port` field, enter **x** to indicate that there is not a physical voice terminal associated with the port assignment. For further information, refer to the appropriate switch implementation manual.
2. Assign the phantom extension (from Step 1) as the incoming destination for the incoming call trunk groups that will be served by the automated attendant. If you are not using the automated attendant as an incoming destination for a trunk group, go to the next step.

3. From the attendant console (or administrative voice terminal), activate Call Forwarding All Calls for the automated attendant extension. Make the destination the DEFINITY AUDIX hunt group extension.
4. Run the Switch Names Audit from the DEFINITY AUDIX system if the system is administered in DS integration. Refer to *DEFINITY AUDIX System — Administration* (585-300-507) for instructions on running a Switch Names Audit.

Assigning a Hunt Group

Assign a new hunt group for the automated attendant if there is not a physical port available on the switch for a station. The hunt group forwards calls to the DEFINITY AUDIX hunt group. Use the following procedure to assign a hunt group for the automated attendant.

1. Enter **add hunt group *number***. Obtain the number from Worksheet D-2.
   a. Set `Group Name` to a name that contains the group extension. The group name can be the group extension, or the group extension can be embedded in the group name.
   b. Set `Group Extension` to the automated attendant extension on the worksheet.
   c. Set `Group Type` to **ucd** (G3V1-V4/R5), or **ucd-mia** (G3R6 or greater)
   d. Leave `Coverage Path` blank for best operation, because all calls are forwarded to the DEFINITY AUDIX hunt group extension.
   e. Set the other fields according to the customer requirements.
   f. Set `Queue?` to **n**

      NOTE:
      Do not assign any members to this hunt group.

   g. Press [ENTER].
2. Assign the automated attendant group extension (from Step 1) as the incoming destination for the incoming call trunk groups that will be served by the automated attendant. If you are not using the automated attendant as an incoming destination for a trunk group, make sure `Auth Code?` is set to **n**.
3. From the attendant console or administrative voice terminal, activate Call Forwarding All Calls for the automated attendant extension. Make the destination the DEFINITY AUDIX hunt group extension.

Night Service to an Automated Attendant

You can set up night service to an automated attendant from an incoming trunk or from a Listed Directory Number (LDN).

NOTE:
There is another way to route calls automatically by time of day. Refer to *DEFINITY AUDIX System — Administration* (585-300-507), Chapter 9, "Automated Attendant," for this alternative procedure. The Automated Attendant Routing Table and the Business and Holiday Schedule allow you to set up night service for the DEFINITY AUDIX Release 3.2 and later.

From an Incoming Trunk

Use the following procedure to set up night service to an automated attendant from an incoming trunk.

1. Assign the night automated attendant extension or hunt group number to the `Night Service` field on the trunk group screen. The night automated attendant receives all incoming calls when night service is activated.
2. Activate Call Forwarding All Calls for the night automated attendant extension or hunt group number. Make the destination the DEFINITY AUDIX hunt group extension.

While the console is in day service mode, calls are routed as usual according to the incoming destination on the trunk group screen. When the console is placed in night service mode, calls are routed according to the night automated attendant destination identified in the `Night Service` field.

From a Listed Directory Number (LDN)

Use the following procedure to set up night service to an automated attendant from an LDN.

1. Enter **change listed-directory-numbers** to assign an extension or extensions on the Listed Directory Numbers screen. The extension(s) must not exist elsewhere in the switch.
2. For each extension assigned in Step 1, assign a name that includes the night automated attendant extension or hunt group number as part of the name.
3. Assign the DEFINITY AUDIX hunt group extension in the `Night Destination` field.

When the attendant console is in day service mode, the LDN acts as usual. When the attendant console is placed in night service mode, calls are sent to the DEFINITY AUDIX hunt group extension and are answered by the automated attendant that corresponds to the number in the `LDN name` field.

Automated Attendant Substitute Strategies

A substitute for an automated attendant is needed so that calls do not go unanswered when the DEFINITY AUDIX system is busy or unavailable.

This section contains suggestions for providing a substitute for an automated attendant. Consult the appropriate switch documents for details and interactions with other features. Each DEFINITY AUDIX system installation will have to be tailored individually.

Generic 3, Release 5, and Newer Switches

For Generic 3, Version 2 or greater switches, either a phantom station or a hunt group was assigned to access the automated attendant. If a phantom station was assigned, activate the Call Vector feature to send calls somewhere else, such as the operator or recorded announcement, if the DEFINITY AUDIX system is unavailable.

If a hunt group was assigned and the DEFINITY AUDIX system is unavailable, use the attendant console to change the destination of Call Forwarding from the DEFINITY AUDIX system to a live attendant (for example, forward calls to LDN). When the DEFINITY AUDIX system becomes available, reactivate forwarding to the DEFINITY AUDIX system extension. Another option is to change the incoming destination to go to a recorded announcement while the automated attendant is out of service (see the optional feature, "Switch Recorded Announcement", in this chapter).

Transfer into AUDIX

This feature allows an attendant or other party to transfer a caller who has been sent to coverage or otherwise redirected back to the DEFINITY AUDIX system to record a message. This feature is available only with CL integration.

1. Enter **change-feature-access-codes**
2. Assign the dial access code to the field `Transfer Into AUDIX`.
3. Make sure the DEFINITY AUDIX system hunt group is assigned to the coverage path of any subscriber who intends to use this feature.

Switch Recorded Announcement

The following procedure is used to provide a recorded announcement at the switch for anyone who accesses the DEFINITY AUDIX system, either through a direct call or through call redirection. The announcement is heard when all the DEFINITY AUDIX system voice ports are busy and calls start entering the DEFINITY AUDIX system queue. Refer to Worksheet D-5 for the information required to administer this feature.

NOTE:
A TN750 Announcement circuit pack must be installed on the switch or a customer-provided external system must be wired to a vacant analog port for this feature to work.

The figure below shows the Recorded Announcements Screen for Generic 3r. The administration screen may look slightly different for other switches or switch releases.

```
change announcements                                    Page   1 of   8   SPE A
                          ANNOUNCEMENTS/AUDIO SOURCES

    Ext.  Type       COR TN  Name                      Q QLen Pro Rate Port

 1: 32101 integrated 1   1   hunt 100                  y N/A  n   32   03D19
 2: 32102 integrated 1   1   vector 2                  y N/A  n   32   03D19
 3: 32103 integrated 1   1   vector 3                  y N/A  n   64   03D19
 4: 32104 integrated 1   1   vector 4                  y N/A  n   64   03D19
 5: 32105 integ-rep  1   1   vector 5                  y N/A  n   64   03D19
 6: 32106 integrated 1   1   vector 6                  y N/A  n   64   03D19
 7: 32107 integrated 1   1   vector 7                  y N/A  n   32   03D19
 8: 32108 integrated 1   1   vector 8                  y N/A  n   32   03D19
 9: 32109 integrated 1   1   vector 9                  y N/A  n   32   03D19
10: 32110 integrated 1   1   vector 10                 y N/A  n   32   03D19
11: 32111 integrated 1   1   vector 11                 y N/A  n   32   03D19
12: 32112 integrated 1   1   vector 12                 y N/A  n   32   03D19
13: 32113 integrated 1   1   vector 13                 y N/A  n   32   03D19
14: 32114 integrated 1   1   vector 14                 y N/A  n   32   03D19
15: 32115 integrated 1   1   vector 15                 y N/A  n   32   03D19
16: 32116 integrated 1   1   vector 16                 y N/A  n   32   03D19
```

Figure 6-1. Example of a Recorded Announcements Screen (R5si)

1. At the switch administration terminal, enter **change announcements**

   a. On a vacant line (1 to 64), set `Ext.` to the extension number. The number must agree with the dial plan.

   b. Set `Type`:

      - If a TN750 is used, type **integrated**

        If you enter integrated, you must complete the `Pro` (protect) and `Rate` fields.

      - If customer-provided external equipment is used, type **analog**

        If you enter analog, you must complete the `Queue Length` and `Port` fields. The `Queue Length` field applies only if **y** is entered in the `Queue` field.

   c. Set `COR` to the desired class of restriction.

   d. Set `TN` to the Tenant Partition Number.

   e. Set `Name`. (You can use up to 15 characters to describe the announcement message.)

   f. Set Q (queue) to **y**

   g. Set `Pro` (protect) or `QLen` (queue length):

      - If a TN750 Announcement circuit pack is used, set Protect (integrated) to **n**

      - If customer-provided external equipment is used, set Queue Length (analog) to a number from **1** to **150**.

   h. If you entered integrated, set `Rate` to specify the recording speed when recording announcements on the TN750B Announcement circuit pack. Valid entries are **16**, **32**, or **64**.

   i. Set `Port` to the equipment location.

   j. Press [ENTER].

2. Enter **change hunt-group *XX*** where *XX* equals the DEFINITY AUDIX system hunt group number.

   a. Set `First Ann. Extension` to the extension of the announcement system.

   b. Set `First Announcement Delay (sec)` to **5**

   c. Press [ENTER].

3. Record the announcement.

   - For a TN750 Announcement circuit pack, dial the announcement's extension number from the console or from a voice terminal with a console class of service (COS).

- For a customer-provided external announcement system, make the recording using the instructions provided with the system.

Switch Multiple Coverage Paths

Multiple coverage paths provide greater flexibility for call-answer treatment. System 75, Generic 1, Generic 3i, Generic 3i-Global, Generic 3s, Generic 3vs, Generic 3r, Release 5si, Release 5vs, or Release 5r can have up to four paths linked together.

On the Coverage Path screen, specify a second path in the `Next Path Number` field. You can link the second path to other paths. These are displayed in the Linkage field. For more details, see the appropriate switch documentation.

Listed Directory Number (LDN) Night Destination

Direct Inward Dialing (DID) numbers can be treated as public Listed Directory Numbers (LDNs). The DEFINITY AUDIX hunt group extension may be entered as a night service destination to receive calls to these listed numbers when the switch is in the night service mode. You may want an automated attendant to handle such calls.

To use the DEFINITY AUDIX hunt group as a night service destination, enter the DEFINITY AUDIX hunt group extension in the `Night Destination` field on the switch Listed Directory Numbers screen.

Expert Agent Selection (EAS)

Expert Agent Selection (EAS) can be activated for a DEFINITY AUDIX hunt group on any system using control-link integration. However, EAS does not work with display set integration.

Expert Agent Selection allows calls to be routed to specialized Agent Login IDs that monitor and log information about each voice port. You enter the DEFINITY AUDIX hunt group number in the `Skill` field on the Agent LoginID screen to associate the Agent Login ID to the DEFINITY AUDIX hunt group. You also assign a voice port extension to each Agent Login ID to link the agent to the voice port.

Setting up an Agent Login ID for each voice port allows switch measurement data to be collected for the voice ports and allows the use of call vectoring in an EAS environment. See your switch documentation for more details to administer Expert Agent Selection.

NOTE:
The Agent Login IDs must be the same number of digits as the DEFINITY AUDIX voice port extensions. The DEFINITY AUDIX system cannot accommodate mixed dial plans. You may want to set aside a range of extensions from the switch dial plan to be used as Agent Login IDs.

A vector that queues to the DEFINITY AUDIX hunt group with EAS activated may include options to control the call in a more professional manner. For example, the queue to the DEFINITY AUDIX hunt group may be too long at times. You can put an announcement in the vector that tells the caller, “Please wait,” or, “You will be transferred to a representative who can handle your call.”

To configure the system for EAS, perform the following tasks:

- Verify the Call Center Optional Features
- Activate EAS on the System-Parameters Features screen
- Press to save the change.
- Assign each Voice Port to an Agent Login ID
- Build a Vector to the DEFINITY AUDIX Hunt Group

Verify the Call Center Optional Features

1. Enter **display system-parameters customer-options**.
2. Press NEXTPAGE until the switch displays the page that includes the `Expert Agent Selection (EAS)` field.

   The following figure shows an example of the Call Center Optional Features page of the System Parameters Customer Options screen. This page contains the EAS field on an R5si switch.

NOTE:
The location of the EAS field varies with the version of switch software.This field might be located on a different page on your switch.

```
display system-parameters customer-options                Page   3 of   4   SPE B
                         CALL CENTER OPTIONAL FEATURES

                          Logged-In ACD Agents: 500

                                 ACD? y           Service Observing (Basic)? y
                       BCMS (Basic)? y   Service Observing (Remote/By FAC)? y
              BCMS/VuStats LoginIDs? y            Service Observing (VDNs)? y
         BCMS/VuStats Service Level? y                            Timed ACW? y
                   Call Work Codes? y                   Vectoring (Basic)? y
      DTMF Feedback Signals For VRU? n                Vectoring (Prompting)? y
       Expert Agent Selection (EAS)? y            Vectoring (G3V4 Enhanced)? y
                            EAS-PHD? y   Vectoring (ANI/II-Digits Routing)? y
                  Forced ACD Calls? n   Vectoring (G3V4 Advanced Routing)? y
          Lookahead Interflow (LAI)? y                   Vectoring (CINFO)? n
Multiple Call Handling (On Request)? y          VDN of Origin Announcement? y
    Multiple Call Handling (Forced)? y              VDN Return Destination? n
  PASTE (Display PBX Data on Phone)? n                              VuStats? y
                       Reason Codes? y             VuStats (G3V4 Enhanced)? y


        (NOTE: You must logoff & login to effect the permission changes.)
```

Figure 6-2. Example of a System Parameters Customer Options Screen — Call Center Optional Features (R5si)

3. Verify that the following fields are set to **y**
   - ACD?
   - Expert Agent Selection (EAS)?
   - Vectoring (Basic)?
4. If any of these fields is not set to y, contact the remote service center to administer the changes. The remote service center should also verify that all the other settings are correct.

Activate EAS on the System-Parameters Features screen

1. Enter **change system-parameters features**

   The switch displays the System Parameters Features screen.

2. Press NEXTPAGE until the switch displays the page that includes the EAS Enabled? field.

```
display system-parameters features                    Page   7 of   8   SPE B
                        CALL CENTER SYSTEM PARAMETERS

EAS
         Expert Agent Selection (EAS) Enabled? y
        Minimum Agent-LoginID Password Length:
          Direct Agent Announcement Extension:                    Delay:
    Message Waiting Lamp Indicates Status For: station

VECTORING
                    Converse First Data Delay: 0      Second Data Delay: 2
                Converse Signaling Tone (msec): 100         Pause (msec): 70
                      Prompting Timeout (secs): 10

SERVICE OBSERVING
                Service Observing Warning Tone? y

ASAI
 Call Classification After Answer Supervision? n
```

Figure 6-3. Example of a System Parameters Features Screen (R5si)

3. Set the `Expert Agent Selection (EAS) Enabled?` field to **y**
4. Press ENTER to save the change.

Activate EAS on the DEFINITY AUDIX Hunt Group

1. At the switch administration terminal, enter **change hunt-group *number***

   where *number* is the number of the DEFINITY AUDIX Hunt Group.

   The switch displays the Hunt Group screen.

```
change hunt-group 99                                   Page   1 of   2   SPE B
                                   HUNT GROUP
      Group Name: audix hunt
    Group Number: 99              Group Extension: 32499    Group Type: ead
                                            Skill? y              ACD? y
           Queue? y                        Vector? y              AAS? n
   Security Code: ____                                            COR: 1
ISDN Caller Disp: ________                                         TN: 1

              Measured: internal                 Supervisor Extension: _____

   Controlling Adjunct: none
Multiple Call Handling: none          Acceptable Service Level (sec): ____
             Objective: _____       Expected Call Handling Time (sec): 180

           Queue Length: 16
Calls Warning Threshold: ___      Calls Warning Port: _______
 Time Warning Threshold: ___       Time Warning Port: _______

                    Redirect on No Answer (rings): 3  Redirect to VDN: 40000
              Forced Entry of Stroke Counts or Call Work Codes? n
```

Figure 6-4. Example of a Hunt Group Screen Using Expert Agent Selection — Page 1 (R5si)

2. Press PgDn until you access the Group Member Assignments page and print out the page.

   NOTE:
   The Group Member Assignments page containing the voice port extension numbers will be removed once you change ACD to **y** in an EAS environment. You need to know the voice port extension numbers later in this procedure.

3. Press PgUp until you access the first page of the Hunt Group screen.
4. Complete page 1 and page 2 of the Hunt Group screen. Make the changes listed in Table 6-1 to activate Expert Agent Selection. All other fields are the same as a standard DEFINITY AUDIX hunt group.

Table 6-1. Hunt Group Screen Differences for EAS

Field	Description
Group Type	expert agent distribution: **ead** (G3V1-V4/R5) **ead-mia** (G3R6 or greater)
Skill?	**y**
ACD?	**y**
Queue?	**y**
Vector?	**y**
AAS?	**n**
Measured	**internal** Measurement data for the ACD split/skill collected (internal to the switch) for VuStats or BCMS. **external** Measurements collected by the Call Management System. **both** Measurements collected both internally and externally. **none** No measurements collected.
Supervisor Extension	Leave this field blank.
Controlling Adjunct	**none**
Multiple Call Handling	**none**
Acceptable Service Level (sec)	Valid entries are blank or **0** through **9999**. Enter the number of seconds within which calls to this hunt group should be answered. This will allow BCMS or VuStats to report the percentage of calls that were answered within the specified time. (The BCMS/VuStats Service Level option must be set to **yes** on the System-Parameters Customer-Options screen, and **internal** appears in the `Measured` field.)

Continued on next page

Table 6-1. Hunt Group Screen Differences for EAS — *Continued*

Field	Description
Objective	Enter a numerical user-defined objective or leave this field blank. (The BCMS/VuStats Service Level option must be set to **yes** on the System-Parameters Customer-Options screen, and **internal** appears in the `Measured` field.)
Redirect on No Answer (rings)	**1** to **20**, or **blank** The maximum number of rings before a call is redirected back to the split/skill or to the administered Vector Directory Number. The port that does not answer automatically changes to an unavailable state.
Redirect to VDN	To redirect a `Redirect on No Answer` call to a Vector Directory Number (VDN) instead of to the split/skill, enter the extension number of the VDN. When all the DEFINITY AUDIX voice ports are busy or the system does not answer, you can redirect the call to a switchboard operator or to message center personnel. You can take bad ports out of service so future calls will not route to them. The VDN can look for another port and provide an announcement such as “Please wait while we redirect your call.”
Forced Entry of Stroke Counts or Call Word Codes	**n**
Message Center	**audix**

5. Press [ENTER] to save the changes.

Assign each Voice Port to an Agent Login ID

Complete an Agent LoginID screen for each DEFINITY AUDIX voice port in the Hunt Group.

1. Enter **add agent-loginID *xxxxx*** where *xxxxx* is the extension of the agent login ID or **add agent-loginID next**.

   NOTE:
   You can change agent login ID data if appropriate (enter **change agent-loginID *xxxxx***).

   The figure below shows an example of the R5si Agent LoginID screen for DEFINITY AUDIX voice port 1.

```
change agent-loginID 30000                                Page   1 of   1   SPE A
                                AGENT LOGINID

          Login ID: 30000                                        TN: 1
              Name: AUDIX Port 1                                COR: 2
     Coverage Path: ____                                 Security Code: ____
     LWC Reception: audix
               AAS? n
             AUDIX? y                   LoginID for ISDN Display? n
Direct Agent Skill: 99                  Call Handling Preference: skill-level
    Port Extension: 31008


     Skill Level   Skill Level    Skill Level     Skill Level     Skill Level
   1: 99   1     5: __   __     9: __   __     13: __   __     17: __   __
   2: __   __    6: __   __    10: __   __     14: __   __     18: __   __
   3: __   __    7: __   __    11: __   __     15: __   __     19: __   __
   4: __   __    8: __   __    12: __   __     16: __   __     20: __   __

     WARNING:  Agent must log in again before skill changes take effect
```

Figure 6-5. Example of an Agent LoginID Screen (R5si)

NOTE:
The Agent Login IDs must be the same number of digits as the DEFINITY AUDIX voice port extensions. The DEFINITY AUDIX system cannot accommodate mixed dial plans.

2. Use the entries in the table below to identify the station and complete the options for each port.

Table 6-2. Agent LoginID Screen Entries

Field	Entry
Login ID	The Login ID displays.
TN	Enter the Tenant Partition number. The default is **1**.
Name	Enter a name that identifies the DEFINITY AUDIX voice port. You may want to match the name on the voice port Station screen.
COR	Enter the Class of Restriction (from 0 to 95) for the agent. The default is **1**.

Continued on next page

Table 6-2. Agent LoginID Screen Entries — *Continued*

Field	Entry
Coverage Path	Leave this field blank.
Security Code	Leave this field blank.
LWC Reception	**audix**
AAS?	**n**
AUDIX?	**y**
LoginID for ISDN Display?	**n**
Direct Agent Skill	Enter the DEFINITY AUDIX hunt group number as a reference or leave blank.
Call Handling Preference	**skill-level**
Port Extension	Enter the extension number of the DEFINITY AUDIX voice port entered on the Station screen for that port.
Skill or SN	Enter the DEFINITY AUDIX hunt group number.
Level or SL (Primary/Secondary)	**1** **(Primary)**

3. Press [ENTER] to save the Agent LoginID screen.
4. Complete an Agent LoginID screen for each of the remaining purchased voice ports.

Build a Vector to the DEFINITY AUDIX Hunt Group

After you change the DEFINITY AUDIX hunt group to EAS, subscribers who have a coverage path to the DEFINITY AUDIX hunt group number will still cover to the hunt group. You can build a vector to the DEFINITY AUDIX hunt group to provide more specific measurements for more efficient call management and for more control over the service levels being offered.

1. Determine the DEFINITY AUDIX call coverage path for subscribers assigned in Task 4-5 in Chapter 4.

NOTE:
If you do not know the Call Coverage Path, enter **list coverage path**. The coverage path is displayed in the coverage point field as hxxx

`where xxx` is the DEFINITY AUDIX hunt group number. Remember the coverage path so you can refer to it later in this procedure.

2. Enter **add vdn *extension***

   where *extension* is the VDN extension users will dial to access DEFINITY AUDIX voice mail.

3. Use the entries in the table below to complete the Vector Directory Number (VDN) screen.

Table 6-3. VDN Screen Entries

Field	Entry
Extension	VDN extension
Name	Name you assign to the VDN
Allow VDN Override?	**n**
COR	Class of Service used by the DEFINITY AUDIX Hunt Group assigned in Task 4-3 in Chapter 4
Vector Number	**1 - 512** The Vector Number identifies the vector you will create in the task below
AUDIX Name	Name entered on the User Defined Adjunct Names screen in Task 4-2.
Measured	**none**
Ist Skill	Number of the DEFINITY AUDIX Hunt Group assigned in Task 4-3 in Chapter 4

4. Press ENTER to save the changes.
5. Enter **change vector *number***

   where *number* is the vector number you entered on the VDN screen in Step 3.

6. Use the entries in the table below to complete the Vector screen.

Table 6-4. Vector Screen Entries

Field	Entry
Number	Number you assigned to this vector (display-only field)
Name	Name of the vector (enter the same name you entered on the VDN screen)
SAI Routing?	**y**
Basic?	**y**
Prompting?	**y**
EAS?	**y**
row *n*	Enter one or more rows listing the conditional logic for routing your calls to the DEFINITY AUDIX voice ports. For example, enter: **queue-to skill *XXX* priority m** where *xxx* is the number of the DEFINITY AUDIX Hunt Group

NOTE:
To learn more about administering conditional logic for vectors, see the ECS Definity Feature Description Guide for your switch.

7. Press ENTER to save the changes.
8. Enter **change coverage path *number***

   where *number* is the Call Coverage Path number assigned to subscribers in Task 4-5 in Chapter 4.
9. in the `Point 1 field`, type **V*XXX***

   where *xxx* is the call vector for DEFINITY AUDIX assigned in step 5 above.
10. Press ENTER to save the changes.
11. Reboot the DEFINITY AUDIX system to activate the Agent Login IDs assigned to each voice port.

Continue with the Installation

After you have administered the relevant switch features for DEFINITY AUDIX, continue with Chapter 7, "Joint Acceptance Testing", before administering the subscribers on the switch.

Joint Acceptance Testing

7

Joint acceptance testing is the process of performing a series of post-installation tests to demonstrate to the customer that the DEFINITY AUDIX System is functioning properly and that IMAPI is operational. These tests must be executed jointly by the customer's LAN system administrator and an experienced Lucent technician when the installed system integrates with customer-provided equipment. The customer and Lucent representatives must run these tests and resolve issues before the service order is completed.

This chapter tests all functions of the DEFINITY AUDIX system except for DCS networking, which is administered and tested in Chapter 9. If the DEFINITY AUDIX is part of a DCS network, complete Task 9-2 in Chapter 9 to finish the joint acceptance testing.

Acceptance Check Tasks

The acceptance check tasks include:

Task 7-1 - "Add Two Test Subscribers"

Task 7-2 - "Test the Call Answer and Voice Mail Features"

Task 7-3 - "Run Test MO-Disk"

Task 7-4 - "Test The Local Area Network"

Task 7-5 - "Clear Administration, Error, and Alarm Logs"

Worksheets Needed

Before beginning these tasks, make sure you have the following worksheets:

- Worksheet B-1: Administer the Voice Ports as Stations (Digital Port Emulation).
- Worksheet C-9: Set Up Alarm Origination

The project manager should have provided you with these worksheets.

Task 7-1: Add Two Test Subscribers

1. If you have not already done so, log into the DEFINITY AUDIX local terminal as **craft**. See Task 5-1A for the login procedure.
2. Type **add subscriber** and press (RETURN).

   The system displays the Subscriber screen.

```
drmfb15     Active    Alarms:  m A  Thresholds: none                Logins: 2
add subscriber                                                     Page 1 of 2
                                 SUBSCRIBER

         Name:                                        Locked? n
    Extension:                                      Password:
          COS: class00                           Miscellaneous:
Switch Number:                               Covering Extension:
 Community ID:                                Broadcast Mailbox?

Press [ENTER] to execute or press [CANCEL] to abort
enter command: add subscriber
```

Figure 7-1. Subscriber Screen

NOTE:
The two test subscriber extensions used in this task must be administered on the switch. See Task 9-1 in Chapter 9 for details on adding subscribers to the switch. (You can add subscribers on the switch using the Add Station screen.) The second test extension must have the coverage path for the AUDIX set.

3. With the cursor in the Name field, type the name of the first test subscriber, for example, test-1 or subscriber-1.

4. Move the cursor to the Extension field and type the extension of the first test subscriber that you are using for the test.

   NOTE:
   These are the only fields that you need to fill in. The system will use defaults for the remaining fields.

5. Press F3 (Enter) to add the test subscriber.
6. Repeat Steps 2 through 5 for the second test subscriber.
7. If the system is running in a DCS environment, repeat Steps 2 through 5 for one remote test subscriber on each switch in the DCS network.

   NOTE:
   Make sure that each DCS remote subscriber is assigned the correct switch number. The switch number for DCS remote subscribers is *not* the same as the host switch number. The Switch Number field on the Subscriber screen must match the switch number for the subscriber's switch on the Switch Link DCIU-SCI screen.

8. Continue with Task 7-2.

Task 7-2: Test the Call Answer and Voice Mail Features

1. Create a test Call Answer message.
   a. From one of the test telephones, call the extension of the second test telephone.
   b. Let the telephone ring until the DEFINITY AUDIX system answers.
   c. After the system greeting and the tone, leave a test message, for example, "This is a test Call Answer message."
   d. Hang up.
2. Retrieve the Call Answer message.
   a. Go to the telephone you just called, and check the message waiting indicator. This is either a lamp on the telephone or a stutter dial tone. (The MWI signal may take up to 1 minute to appear.) If the MWI is on, Continue with Step b. If the MWI does not activate, refer to the troubleshooting procedures in *DEFINITY AUDIX System — Maintenance*, 585-300-121, to activate the MWI.
   b. From telephone with the MWI on, call the DEFINITY AUDIX extension.
   c. After the DEFINITY AUDIX system answers and prompts you for your extension, press #.

d. When the DEFINITY AUDIX system prompts you for your password, press [#]. There is no password assigned to this extension.

e. If the Name Record by Subscriber feature is on, the DEFINITY AUDIX system prompts you to record a name. Record a test name, for example, "test name."

f. Press [2] and then press [0] to listen to the message you recorded from the first test extension.

g. After listening to the message, press [*] [D] to delete the message.

3. Create a test Voice Mail message.

a. From the DEFINITY AUDIX session you are currently in, press [1].

b. After the tone, speak a test message (for example "This is a test Voice Mail message.")

c. When you have finished speaking the message, press [#] to approve the message.

d. When prompted for a destination extension, enter the extension of the first test telephone and press [#] to end the addressing.

e. Press [#] again to deliver the test message.

f. Hang up.

4. Retrieve the test Voice Mail message.

a. Walk back over to the first test telephone and check the MWI. It may take a minute or two for the MWI to turn on. When it is on, Continue with the next step. If the MWI does not activate, refer to the troubleshooting procedures in *DEFINITY AUDIX System — Maintenance*, 585-300-121 to activate the MWI.

b. Call the DEFINITY AUDIX extension to retrieve the message.

c. After the DEFINITY AUDIX system answers and prompts you for your extension, press [#].

d. When the DEFINITY AUDIX system prompts you for your password, press [#]. There is no password assigned to this extension.

e. Press [2] and then press [0] to listen to the message you recorded from the second test extension.

f. After listening to the message, press [*] [D] to delete the message.

g. Hang up.

5. Continue with Task 7-3.

Task 7-3: Run Test MO-Disk

At this point, the backup MO disk added in Task 5-3 should still be in the magneto-optical disk drive.

1. Check the status of the MO disk drive.

   a. With the cursor on the DEFINITY AUDIX command line, enter **status mo-disk** and press [RETURN].

      The system displays the Status mo-disk screen. The Status field should display `In service, idle`.

   b. If the Status field displays any other value, see the Status MO-Disk screen description in *DEFINITY AUDIX System — R4.0 Screens Reference*, 585-300-213 for an explanation of the values of the Status field or see *DEFINITY AUDIX System — Maintenance*, 585-300-121, for information on magneto-optical disk problems.

2. With the cursor on the DEFINITY AUDIX command line, enter **test mo-disk** and press [RETURN].

   The system displays the MODisk Test Results screen

```
drmfb15     Active    Alarms:  m A  Thresholds: none                Logins: 2
test mo-disk                                                       Page 1 of 1
                            MODISK TEST RESULTS            Date: 12/30/98 09:27

                                        Most Recent            Test Counters:
 Resource   Loc.    Test Name           Test Result           Pass Fail Abort
 MO_DISK    01C0602 Check MO Filesystem                          0    0    0
 MO_DISK    01C0602 Read/Write MO                                0    0    0

Press [Enter] to execute
enter command: test mo-disk
```

Figure 7-2. MODISK Test Results

3. Press [F3] (Enter) to begin the test. The test takes from 1 to 10 minutes to complete.

4. If the test does not complete successfully, refer to *DEFINITY AUDIX System — Maintenance*, 585-300-121, for information on magneto-optical disk problems.
5. When the test completes successfully, determine the next step:
   - If the following conditions are met, continue with Task 7-4.
     - — AUDIX server hardware options have been purchased.
     - — IMAPI system parameters have been activated.
   - If Audix server options or IMAPI system parameters have not been activated, go to Task 7-5.

Task 7-4: Test The Local Area Network

If possible, this task should be performed jointly with the customer's LAN system administrator.

Acceptance tests for the AUDIX server are limited to performing internal diagnostics of the server to the Lucent provided demarcation point. If a customer representative is available, joint acceptance testing will include a test of the customer's server, another AUDIX server, or a PC with or without INTUITY Message Manager.

1. With the cursor on the DEFINITY AUDIX command line, type **test lan** and press RETURN.

   The system displays the Test LAN Results screen.

```
drmfb15     Active    Alarms:  m A  Thresholds: none                Logins: 2
test lan                                                            Page 1 of 1
                                TEST LAN RESULTS            Date: 12/30/98 09:34

                                          Most Recent            Test Counters:
 Resource    Loc.    Test Name            Test Result            Pass Fail Abort
 LANINTF     01C06   Get hardware ID                               0    0    0
 LANINTF     01C06   External loop around                          0    0    0
 AIS         01C06   Test Process                                  0    0    0

Press [Enter] to execute
enter command: test lan
```

Figure 7-3. Test LAN Results Screen

2. Press F3 (Enter) to begin the tests. These tests takes up to 2½ minutes to run.
3. If any of the individual tests fail, refer to *DEFINITY AUDIX System — Maintenance*, 585-300-121 for information on troubleshooting the LAN connection. If there are problems with the network itself, the LAN system administrator must resolve these problems before proceeding with this test.
4. To test if a connection can be made to an INTUITY Message Manager user or other LAN node, at the DEFINITY AUDIX administration command line type **test lan dest** followed by the IP numerical address (in the form *nnn.nnn.nnn.nnn*) on the screen then press RETURN.
5. Press F3 (Enter).

   If the connection is made, a UNIX ping is returned. The test takes approximately 15 seconds. If the test fails, refer to *DEFINITY AUDIX System — Maintenance*, 585-300-121 for information on troubleshooting the LAN connection.
6. After the tests pass, continue withTask 7-5.

Task 7-5: Clear Administration, Error, and Alarm Logs

This task must be completed from the technical support center.

1. Call the RMC and let them know you have completed the installation and acceptance tests for this DEFINITY AUDIX system. Ask them to clear the administration, error, and alarm logs.
2. Continue with Chapter 8.

Initial Subscriber Administration

8

This chapter describes the tasks required to administer the initial subscribers.

Initial Subscriber Administration Tasks

This chapter contains the following tasks:

Task 8-1 - "Optimize the Class of Service (COS) Values"

Task 8-2 - "Add the Initial Subscribers"

Task 8-3 - "Complete Initial Administration"

Task 8-1 and Task 8-2 are completed by either the DEFINITY AUDIX system administrator or by the Lucent Software Specialist (SS), depending on the terms of the customer contract.

Task 8-3 is completed by either the system administrator or the SS administering the initial subscribers. This task reminds the administrator to perform the initial administration tasks described in *DEFINITY AUDIX System — Administration*, 585-300-507.

Worksheets Needed

Before beginning these tasks, make sure you have Worksheet C-8: Add Subscribers. The worksheet is included as an appendix in this document.

Task 8-1: Optimize the Class of Service (COS) Values

Before you administer the subscribers, you must first ensure that the COS values you assign to subscribers are optimized for your system. For instance, if you are

assigning Intuity Message Manager to a set of subscribers, you should first activate IMAPI on the appropriate COS. You can also change other COS settings to activate desired features.

Use the following procedure to activate Intuity Message Manager on a COS. You can also modify this procedure to activate other features for any Class of Service you choose.

1. Decide which class of service is appropriate for inclusion of INTUITY Message Manager.
2. With the cursor on the DEFINITY AUDIX command line, enter **change cos *x*** where *x* is the COS number you just chose.

   The system displays the Class of Service screen.

```
drmfb15      Active     Alarms:  m A  Thresholds: none                  Logins: 2
change cos 1                                                           Page 1 of 2
                                CLASS OF SERVICE

              Name: Class01        COS Number: 1            Modified? y
Addressing Format: extension

                                          Login Announcement Set: System
System Multilingual is OFF         Call Answer Primary Annc. Set: System
Call Answer Language Choice? n  Call Answer Secondary Annc. Set: System

PERMISSIONS  Type: call-answer                  Announcement Control? n
       Outcalling? n              Priority Messages? y     Broadcast: none
     IMAPI Access? y      IMAPI Voice File Transfer? y

enter command: change cos 1
```

Figure 8-1. Class of Service Screen

3. To activate INTUITY Message Manager, type **y** in the following fields:
   - `IMAPI access?`
   - `IMAPI Voice File Transfer?`
4. To activate Outcalling, type **y** in the `Outcalling` field. (See Worksheet D-4 for other details about Outcalling.)
5. Change other settings as needed.
6. Press F3 (Enter) to save the changes.
7. Repeat this procedure as needed to modify other classes of service.
8. Continue with Task 8-2.

Task 8-2: Add the Initial Subscribers

This task describes the basic procedure for adding subscribers via the Subscriber screen.The basic procedure requires entering only subscriber names and extensions. If you are activating Intuity Message Manager, Use default values for all other parameters. Check Worksheet C-8 to see if any subscribers require administration other than their names and extensions. If so, refer to Chapter 3, *Ongoing Administration*, in *DEFINITY AUDIX System — Administration*, 585-300-507, for the procedures to add and administer the subscribers. If subscribers do not require extra administration, continue with the following procedure.

NOTE:
You can also add subscribers via the AUDIX Administration and Data Acquisition Package (ADAP) **addsub** command. This procedure is described in *AUDIX Administration and Data Acquisition Package,* 585-302-502. However, before adding subscribers via ADAP, make sure the DEFINITY AUDIX system administrator has installed and administered the ADAP system.

The procedure for adding subscribers via the DEFINITY AUDIX Subscriber screen is as follows.

1. With the cursor on the DEFINITY AUDIX command line, enter **add subscriber**

   The system displays the Subscriber screen

```
drmfb15     Active    Alarms:  m A  Thresholds: none                Logins: 2
add subscriber                                                     Page 1 of 2
                                 SUBSCRIBER

         Name:                                        Locked? n
    Extension:                                      Password:
          COS: class00                           Miscellaneous:
Switch Number:                               Covering Extension:
 Community ID:                                Broadcast Mailbox?

Press [ENTER] to execute or press [CANCEL] to abort
enter command: add subscriber
```

Figure 8-2. Add Subscriber Screen

2. Type the name of the first subscriber listed on Worksheet C-8 in the Name field.
3. Type the extension of the first subscriber in the Extension field.
4. Type in the correct Class of Service for the subscriber in the COS field.

   NOTE:
   You can use the default value, or you can type any COS that is administered on DEFINITY AUDIX. Select a COS that has the appropriate settings for Intuity Message Manager, Outcalling, and any other optional features you administered in Task 8-1.

5. Press F3 (Enter) to add the subscriber.
6. Repeat Steps 1 through 5 for each subscriber listed on Worksheet C-8.
7. If the system is running in a DCS environment, repeat Steps 1 through 5 for each initial remote subscriber.

   NOTE:
   Make sure that each DCS remote subscriber is assigned the correct switch number. The switch number for DCS remote subscribers is

not the same as the host switch number. The Switch Number field on the Subscriber screen must match the switch number for the subscriber's switch on the Switch Link Dciu-Sci screen. See Task 5-1F for the instructions on obtaining the correct switch numbers. For mail boxes with no corresponding station on any switch, set the switch number to "0" (zero). If you are adding remote subscribers for digital networking, see *DEFINITY AUDIX system-Digital Networking*, 585-300-534 for instructions on adding these remote subscribers.

8. Continue with Task 8-3.

Task 8-3: Complete Initial Administration

The DEFINITY AUDIX system administrator or SS should complete the following steps.

1. Read Chapter 2 and Chapter 3 of *DEFINITY AUDIX System — Administration*, for an overview of the administration process.
2. Complete the initial administration tasks given in that book that apply to the system being installed, for example:
   - Recording automated attendant menus
   - Recording customized announcements
   - Changing system passwords
   - Installing and administering the AUDIX Administration and Data Acquisition Package (ADAP)
3. Tell your subscribers the features of their DEFINITY AUDIX system.
4. Copy and distribute any letters and user documents that your subscribers need.
5. Continue with Chapter 9.

Final Switch Administration: G3r/R5r

9

This chapter includes the final tasks required to administer DEFINITY AUDIX in the host switch. If the host switch is part of a DCS network with remote subscribers to the DEFINITY AUDIX system, this chapter also describes how to administer these remote switches. The following tasks are included:

- Modifying the Station Screen for Each Subscriber
- DCS Administration — Optional
- Administering the Subscribers on the Remote Switch

Task 9-1: Modifying the Station Screen for Each Subscriber

Modify the station screen for each subscriber to complete the subscriber administration.

At the switch administration terminal, modify the station screen for each DEFINITY AUDIX subscriber as follows:

1. Set `Coverage Path` to the subscriber coverage path defined in Task 4-5 in Chapter 4.
2. Set `LWC Reception` to **audix**
3. Set `LWC Activation?` to **y** if the subscriber is assigned the Leave Word Calling feature.
4. Set `Redirect Notification` to **y**
5. Set `Message Waiting Indication` to **led** or **neon** if the voice terminal has a message waiting indicator (MWI) lamp. This applies to 500, 2500, and 7104A voice terminals only.
6. In the `Button Assignments` field, enter the following button assignments, when needed, to interact with DEFINITY AUDIX system features:
   - **call-fwd**
   - **goto-cover**

- **lwc-store**
- **send-calls**

7. Press [ENTER] .
8. Determine your next step:
   - If DEFINITY AUDIX operates in a DCS network, continue with Task 9-2.
   - If DEFINITY AUDIX does not operate in a DCS network, continue with Chapter 10.

Task 9-2: DCS Administration — Optional

The DEFINITY AUDIX system can serve more than one switch when the switches are part of a Distributed Communications System (DCS) network. The switch that hosts the DEFINITY AUDIX system connects it to the other switches in the network. The DEFINITY AUDIX system uses the switch's existing DCS trunks for both data and voice communications. This section outlines the procedures for administering the switch as the host or as a remote switch for the DEFINITY AUDIX system in a DCS environment.

NOTE:
The procedures in this section assume that the voice trunks between the switch nodes are already translated. See the appropriate switch documentation for these procedures.

There are two possible configurations for using a DEFINITY AUDIX system in a DCS configuration:

- A DEFINITY AUDIX system in a DCS configuration via X.25 Data Channels

  A DEFINITY AUDIX system residing on a switch can support up to 20 remote switches in a DCS network. A remote switch does not have a direct data link connection to the DEFINITY AUDIX system. Rather, it passes its data through the host switch to the DEFINITY AUDIX system via a channel over the DCS X.25 data link. The DEFINITY AUDIX system on the host switch has separately administered channels to each of the supported remote switches. These channels, provided by the host switch, connect the DEFINITY AUDIX system to the remote switches via hop channels. The host switch then provides the voice port and DEFINITY AUDIX system connections for all switches in the DCS network that communicate with the DEFINITY AUDIX system. All DEFINITY AUDIX system features can be activated from both the host and remote switch.

  The remote DEFINITY AUDIX system hunt group can be a coverage point in a call coverage path at a remote switch not connected directly to the DEFINITY AUDIX system. The remote switch must be in the DCS network.

- The DEFINITY AUDIX system in a DCS configuration via ISDN-PRI D-channel

  This feature is also known as ISDN-PRI D-channel DCS AUDIX feature, and also uses X.25 connectivity between the DEFINITY AUDIX system and the host switch.

  The host switch uses ISDN-PRI to connect to remote switches in the DCS network. The feature requires the same hardware as the DCS Over ISDN-PRI D-channel feature.

Each of the following configurations is described in this section. For detailed examples of DCS in the following configurations, refer to the DEFINITY Communications System documentation.

- Traditional DCS network example
- D-channel DCS network example (private network only)
- D-channel DCS network example (public network access/egress)
- Integrated DCS network example (private network only)
- Integrated DCS network example (public network access)

To administering a DCS network, you must perform the the following subtasks:

- Assigning the Adjunct Names at the Remote Switch
- Administering DCS with X.25 Signaling or Administering DCS Via ISDN-PRI D-Channel
- Assigning the Hunt Group at the Remote Switch

Task 9-2A: Assigning the Adjunct Names at the Remote Switch

At the remote switch, enter the name of the DEFINITY AUDIX system on the User Defined Adjunct Names screen. Perform these steps at each remote switch:

1. At the remote switch administration terminal, enter **change adjunct names**

   The switch displays the User Defined Adjunct Names screen.

```
change adjunct-names                                        Page 1 of 1     SPE A

                              USER DEFINED ADJUNCT NAMES


              AUDIX NAMES                     MESSAGING SERVER NAMES

              1: audix                              1:
              2: audixcl                            2:
              3:                                    3:
              4:                                    4:
              5:                                    5:
              6:                                    6:
              7:                                    7:
              8:
```

Figure 9-1. Example of a User Defined Adjunct Names Screen (Remote R5r)

2. Under AUDIX Names column, enter the DEFINITY AUDIX name used by the host switch.

NOTE:
This same name must be entered in the AUDIX Name field on the following screens:

- add hunt-group
- change communication-interface processor-channels
- add station
- change signaling-group (ISDN)
- add term-ext group (ISDN)
- add vector-directory-number (ISDN)

Determine the next step:

- If the switch has X.25 signaling, continue with Task 9-2B.
- If the switch does not have X.25 signalling, continue with Task 9-2C.

Task 9-2B: Administering DCS with X.25 Signaling

1. Use the examples below to design a DCS network suitable for your system.

   The figure below shows the DCS switch data connections. In a DCS data link, the DEFINITY AUDIX system is incorporated in a host switch with data links to the remote switch.

   NOTE:
   The design center designs a multi-node DCS with a DEFINITY AUDIX system. You need to obtain the planning worksheets from the design center before beginning the DCS switch administration described in this chapter.

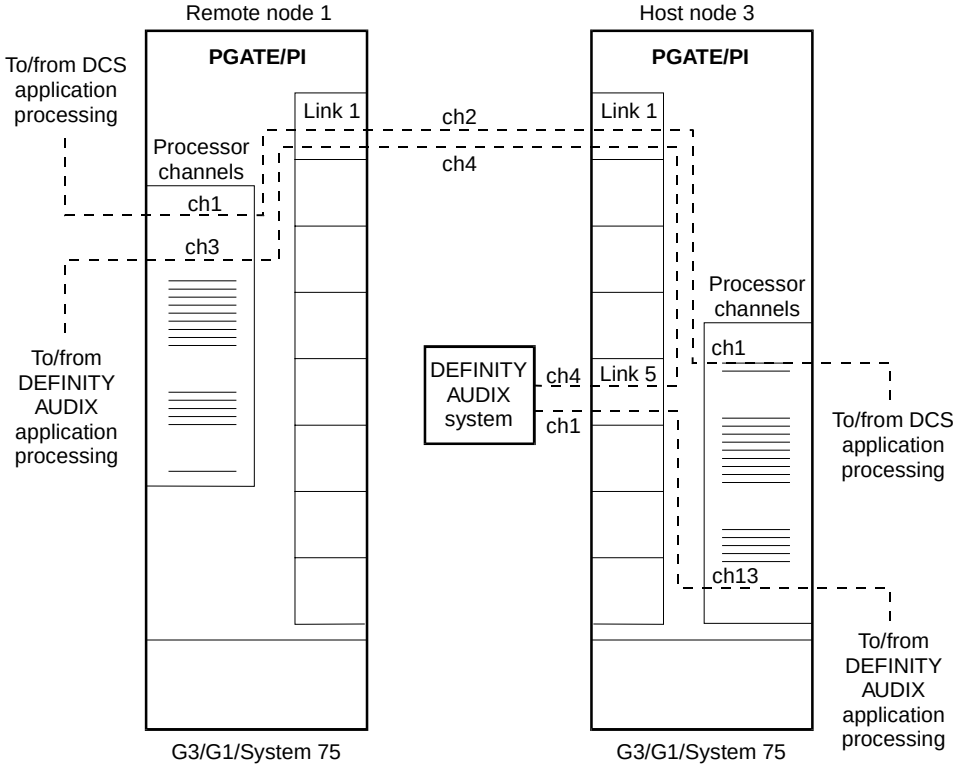

Figure 9-2. Example of a DEFINITY AUDIX System Data Link in a DCS

The figure above shows the following values:

NOTE:
The following values are just examples. Use these values only as a guide to complete this task.

Table 9-1. Example System Data Link Values

Remote (Node 1)		Host (Node 3)	
Processor Channel	3	Processor Channel	13
Interface Link	1	Interface Link	5
Interface Channel	4	Interface Channel	1
Local Port	3	DEFINITY AUDIX Machine-ID	4
Remote Port	4		

The host switch Processor Channel Assignment screen for the above example shows the following values for the DCS processor channel and the DEFINITY AUDIX processor channel:

Table 9-2. Example Values for the Host Switch Processor Channel Assignment Screen

Proc Channel	Application	Interface Link	Interface Chan	Local Port	Remote Port	Adjunct Name	Machine-ID
1	dcs	1	2	2	2		1
13	audix	5	1	59	1	AUDIXCL	4

NOTE:
There is also an associated hop channel to administer in Task 9-2B1.

The figure below shows the DEFINITY AUDIX Switch Link DCIU-SCI screen for the above example.

```
AUDIX STATUS: Active       alarms: none     thresholds: none        logins: 1
 change switch-link                                                Page 1 of 1

                          SWITCH LINK DCIU-SCI

         AUDIX Port                                AUDIX Port
Switch  Logical   Switch  Data         Switch  Logical   Switc    Data
Number  Channel   Port    Link         Number  Channel   Port     Link
   1       4       3       1              2       __       __       _
   3       1       59      1              4       __       __       _
   5       __      __      _              6       __       __       _
   7       __      __      _              8       __       __       _
   9       __      __      _             10       __       __       _
  11       __      __      _             12       __       __       _
  13       __      __      _             14       __       __       _
  15       __      __      _             16       __       __       _
  17       __      __      _             18       __       __       _
  19       __      __      _             20       __       __       _

    Host Switch: 3
          AUDIX: 4


enter command: change switch-link
Cancel  Refresh  Enter  ClearFld  Help  Choices  NextPage  PrevPage
```

Figure 9-3. Example of a DEFINITY AUDIX Switch-Link DCIU-SCI Screen

2. Continue with Task 9-2B1.

Task 9-2B1: Assigning the Processor Channel at the Remote Switch

At the remote switch, use the following steps to assign a processor channel for the DEFINITY AUDIX system on the DCS link between the remote switch and the host switch.

Perform these steps at each remote switch.

CAUTION:
The following step disables DCS transparency. We recommend you perform this procedure after normal business hours.

1. Enter **busyout link *x*** to busy out the link, where *x* is the DCS link number.
2. Enter **change communication-interface links**

a. Set `Enable?` to **n** for the DCS link between the host switch and the remote switch.

b. Press [ENTER].

3. Enter **change communication-interface processor-channels**

The remote switch displays the Processor Channel Assignment screen.

```
change communication-interface processor-channels              Page 1 of 8    SPE B

                            PROCESSOR CHANNEL ASSIGNMENT

Proc                      Interface     Local     Remote     Adjunct
Chan     Application     Link Chan     Port       Port       Name        Machine-ID
  1:
  2:
  3:
  4:
  5:     mis              5    1        3          1
  6:
  7:
  8:
  9:
 10:
 11:
 12:
 13:
 14:
 15:
 16:
.
.
.
 59:     audix            1    1        1          1        defaud          1
```

Figure 9-4. Example of a Processor Channel Assignment Screen (Remote Switch)

4. Use the entries in the table below to assign an unused processor channel on the DCS link between the remote switch and the host switch.

Table 9-3. Processor Channel Assignment Screen Entries

Field	Description
Proc Chan	This field is display-only and indicates each of the 128 processor channels. Choose an unused processor channel (**1** to **128**) and complete the fields for that channel.
Appl.	Enter **audix** to identify the channel application.
Interface Link	Enter the number of the Interface Link that was busied out at the beginning of this task. This is the DCS link that connects this remote switch to the host switch.
Interface Channel	Enter a number from **1** to **128** to identify the interface channel on the DCS link that connects this remote switch to the host switch for the purpose of connecting to the DEFINITY AUDIX system. This number must match the AUDIX Port Logical Channel field on the DEFINITY AUDIX system Switch-Link DCIU-SCI screen.
Machine-ID	Enter the Machine ID for the DEFINITY AUDIX system. This entry must match with the AUDIX field entry on the DEFINITY AUDIX Switch-Link DCIU-SCI screen.
Local Port	Enter the Switch Port number used on the DEFINITY AUDIX Switch-Link DCIU-SCI for the remote switch.
Remote Port	Enter the value entered for Interface Channel above. This is the port on which the host switch expects the connection to be established.
Adjunct Name	Enter the name defined on the switch User Defined Adjunct Names screen in Task 9-2A, such as **audix**. This name must match the AUDIX Name field on the host switch User Defined Adjunct Names screen for this DEFINITY AUDIX system if the host switch is a G3r/R5r.

5. Press ENTER.

The following table shows the field correlations between a remote switch Processor Channel Assignment screen and the DEFINITY AUDIX system Switch-Link DCIU-SCI screen. The field entries on these two screens must match as specified below.

Table 9-4. Remote Switch and DEFINITY AUDIX System Correlations

Remote Switch Processor Channel Assignment Screen Field	DEFINITY AUDIX Switch-Link DCIU-SCI Screen Field
Interface Channel Remote Port	AUDIX Port Logical Channel
Local Port	Switch Port
Machine-ID	AUDIX

At the remote switch administration terminal, perform the following steps to enable the DCS link between the host switch and the remote switch.

CAUTION:
These steps will restart all links on this interface. It is recommended that you perform them after normal business hours.

6. Enter **change communication-interface links**
7. Set `Enable` to **y** for the DCS link you disabled at the beginning of this task.
8. Press [ENTER] to save this change.
9. Continue with Task 9-2B1.

Task 9-2B1: Assigning the Hop Channel at the Host Switch

Go to the host switch administration terminal. At the host switch, complete the following steps to establish a hop (a software data path) from the remote switch through the host switch to the DEFINITY AUDIX system.

CAUTION:
This step disables DCS transparency. It is recommended that you perform this step after normal business hours.

1. Enter **busyout link *x***, where x is the link number of the DCS link between the host switch and the remote switch.
2. Enter **busyout link *x***, where *x* is the link number of the link between the host switch and the DEFINITY AUDIX system.
3. Enter **change communication-interface links**
   a. Set `Enable?` to **n** for the DCS link between the host switch and the remote switch.

b. Set `Enable?` to **n** for the link between the host switch and the DEFINITY AUDIX system.

c. Press [ENTER].

4. Enter **change communication-interface hop-channels**

   The switch displays the Hop Channel Assignment screen.

```
change communication-interface hop-channels                    Page 1 of 4     SPE B

                              HOP CHANNEL ASSIGNMENT

   Index  Link/Channel A  Link/Channel B    Index  Link/Channel A  Link/Channel B
     1:    5      4        1      4          17:
     2:                                      18:
     3:                                      19:
     4:                                      20:
     5:                                      21:
     6:                                      22:
     7:                                      23:
     8:                                      24:
     9:                                      25:
    10:                                      26:
    11:                                      27:
    12:                                      28:
    13:                                      29:
    14:                                      30:
    15:                                      31:
    16:                                      32:
```

Figure 9-5. Example Hop Channel Assignment Screen (Host)

5. Use the entries in the table below to complete the Hop Channel Assignment screen.

Table 9-5. Hop Channel Assignment Screen Entries (Host)

Field	Description
Link	Enter an interface link number from **1** through **12**. For the first link, enter the Interface Link from the host switch Processor Channel Assignment screen for the link that connects the remote switch to the host switch (this is the link busied out in step 1 of this task).
Channel A	Enter the Interface Chan from the remote switch Processor Channel Assignment screen for the channel that connects the remote switch to the DEFINITY AUDIX system on the host switch.
Link	Enter an interface link number from **1** through **12**. For the second link, enter the Interface Link from the host switch Processor Channel Assignment screen for the link that connects the host switch to the DEFINITY AUDIX system (this is the link busied out in step 2 of this task).
Channel B	Enter the Remote Port from the remote switch Processor Channel Assignment screen for the channel that connects the remote switch to the DEFINITY AUDIX system. This is also the AUDIX Port Logical Channel used on the DEFINITY AUDIX Switch-Link DCIU-SCI screen for the remote switch.

6. Press [ENTER].

   Perform the following steps to enable the DCS link between the host switch and the remote switch and between the host switch and the DEFINITY AUDIX system.

   CAUTION:
   These steps will restart all links on this interface. It is recommended that you perform them after normal business hours.

7. At the host switch terminal, enter **change communication-interface links**
8. Set `Enable` to **y** for both the DCS link between the host switch and the remote switch and for the link between the host switch and the DEFINITY AUDIX system.
9. Press [ENTER].
10. Continue with Task 9-2D.

Task 9-2C: Administering DCS Via ISDN-PRI D-Channel

Complete this task if the switch does not have X.25 signalling.

This section contains step-by-step procedures to administer a DEFINITY AUDIX system on a switch in a DCS network using an ISDN-PRI D-channel configuration (also known as DCS+). Network design examples for the following networks are provided in the DEFINITY documentation.

- Traditional DCS networks, D-channel DCS networks (private network only)
- D-channel DCS networks (public network access/egress)
- Integrated DCS networks (private network only)
- Integrated DCS networks (public network access)

NOTE:
The design center can assist you when designing a multi-node DCS+ with a DEFINITY AUDIX system.

The figure below shows an example of the DCS+ switch data connections with a remote switch and a host switch with a DEFINITY AUDIX system.

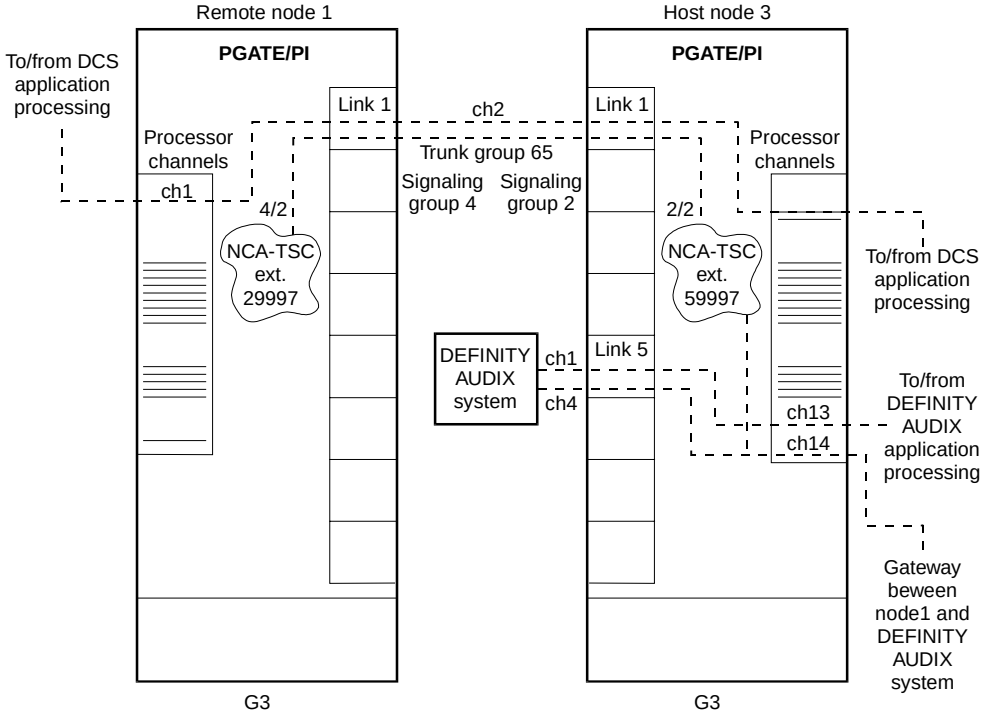

Figure 9-6. Example DEFINITY AUDIX System in an ISDN DCS+ Network

The figure above shows the following example values for a DCS network:

Table 9-6. Example Values for a DCS Network

Remote (Node 1)		Host (Node 3)	
Signaling Group	4	Signaling Group	2
Administered NCA TSC Index	2	Administered NCA TSC Index	2
NCA-TSC Extension	29997	NCA-TSC Extension	59997
		Gateway Processor Channel	14

The following figure shows an example of the DEFINITY AUDIX system Switch Link DCIU-SCI screen for the above example.

```
AUDIX STATUS: Active       alarms: none     thresholds: none        logins: 1
 change switch-link                                                Page 1 of 1

                          SWITCH LINK DCIU-SCI

         AUDIX Port                                AUDIX Port
Switch  Logical   Switch  Data         Switch  Logical   Switch    Data
Number  Channel   Port    Link         Number  Channel   Port      Link
   1       4       3       1              2       __        __       _
   3       1       59      1              4       __        __       _
   5       __      __      _              6       __        __       _
   7       __      __      _              8       __        __       _
   9       __      __      _             10       __        __       _
  11       __      __      _             12       __        __       _
  13       __      __      _             14       __        __       _
  15       __      __      _             16       __        __       _
  17       __      __      _             18       __        __       _
  19       __      __      _             20       __        __       _

    Host Switch: 3
          AUDIX: 4


enter command: change switch-link
Cancel  Refresh  Enter  ClearFld  Help  Choices  NextPage  PrevPage
```

Figure 9-7. Example of a DEFINITY AUDIX Switch-Link DCIU-SCI Screen

Task 9-2C1: Assigning the Processor Channel at the Host Switch

At the host switch terminal, use the following steps to assign a processor channel as the gateway between the DEFINITY AUDIX system and the remote switch.

1. Enter **change communication-interface processor-channels**

   The switch displays the Processor Channel Assignment screen.

```
change communication-interface processor-channels              Page 1 of 8    SPE B

                              PROCESSOR CHANNEL ASSIGNMENT

Proc                        Interface     Local     Remote     Adjunct
Chan     Application       Link Chan     Port      Port       Name        Machine-ID
  1:
  2:
  3:
  4:
  5:     mis                 5    1        3         1
  6:     audix               5    1        6         1        audixcl          1
  7:
  8:
  9:
 10:
 11:
 12:
 13:
 14:
 15:
 16:
```

Figure 9-8. Example of a Processor Channel Assignment Screen (ISDN Gateway)

2. Use the entries in in the table below to assign a gateway between the DEFINITY AUDIX system and the remote switch.

Table 9-7. Processor Channel Assignment Screen Entries (ISDN Gateway)

Field	Description
Proc Chan	This field is display-only and indicates each of the 128 processor channels. Choose an unused processor channel (**1** to **128**) and complete the fields for that channel. This processor channel provides a gateway on the host switch.
Application	Enter **gateway** to identify the channel application, ISDN Gateway.
Interface Link	Enter the Interface Link from the host switch Interface Links screen for the DEFINITY AUDIX link.
Interface Channel	Enter a number from **1** to **64** to identify the interface channel that connects the DEFINITY AUDIX system to the host switch.

Table 9-7. Processor Channel Assignment Screen Entries (ISDN Gateway)

Field	Description
Remote Port	Enter the value entered for Interface Channel above. This is the port on which the host switch expects the connection to be established.
Machine-ID	Leave this field blank.
Local Port	Enter the Switch Port number used on the DEFINITY AUDIX Switch-Link DCIU-SCI screen for the DEFINITY AUDIX system.

3. Press ENTER.
4. Continue with Task 9-2C1.

Task 9-2C1: Assigning the Signaling Group at the Host Switch

The Signaling Group screen is used to administer the call-associated (CA) and non-call-associated (NCA) Temporary Signaling Connections (TSC) used in support of DCS Over ISDN PRI D-channel feature.

Before assigning the Signaling Group at the host switch, ensure that the following steps are complete to enable voice communications on the DCS connection between the host switch and the remote switch. This is part of the DCS administration. The DEFINITY AUDIX system uses the existing DCS trunks for both data and voice communications. Refer to the DEFINITY Communications System documentation for more information.

1. Set up DCS on a trunk group between the host switch and the remote switch with `Used for DCS` set to **y** and `DCS Signaling` set to **d-chan** (**change trunk-group *number***). In the example, the trunk group is 65.
2. Set up a Uniform Dial Plan code for the trunk group between the host switch and the remote switch (**add udp *number***).
3. Define the UDP Code on the AAR (Automatic Alternate Routing) Digit Analysis Table (**change aar analysis *number***). The AAR digit analysis table is used to route the call.
4. Define a route pattern for the UDP Code on the trunk group (65 in the example) (**add route-pattern *UDP Code***).

Perform these steps at the host switch administration terminal.

1. Enter **change signaling-group *x*** where *x* is the signaling group associated with the DCS non-call-associated temporary signaling connection (NCA-TSC) on the remote switch. (It is assumed that DCS is administered already on this signaling channel.)

   The Signaling Group screen appears.

```
change signaling-group 4                                        Page 1 of 5    SPE A

                                  SIGNALING GROUP

Group Number: 4        Associated Signaling? y           Max number of NCA TSC: 64
                          Primary D-Channel: 01C0716      Max number of CA TSC: 500
                                                         Trunk Group for NCA TSC: 57
          Trunk Group for Channel Selection: 57
```

Figure 9-9. Example Signaling Group Screen — Host (Page 1)

2. Use the entries in the table below to complete the screen.

Table 9-8. Signaling Group Screen Entries — Host (Page 1)

Field	Description
Group Number	Displays the signaling group number
Associated Signaling	**n** indicates Non-Facility Associated Signaling.
Primary D-channel	The port number associated with the DS1 Interface circuit pack port. Currently, with FAS and NFAS, it is always the 24th port on the DS1 Interface circuit pack. Default is blank.
Secondary D-channel	The port number associated with the DS1 Interface circuit pack port used for secondary D-channel signaling. Currently, with FAS and NFAS, it is always the 24th port on the DS1 Interface circuit pack. Default is blank.

Table 9-8. Signaling Group Screen Entries — Host (Page 1)

Field	Description
Max Number of NCA TSC	Increment this field entry by 1 (for example, if this entry is **2**, change it to **3**). This is the maximum number of simultaneous Non-Call Associated Temporary Signaling Connections (NCA-TSCs) that can exist in the Signaling Group. This number includes all NCA-TSCs that are administered on Pages 2 through 5 of the screen and those NCA-TSCs that tandem through the switch in route to another switch in the network. Valid entries are **0** to **256**; default is **0**.
Max number of CA TSC	The maximum number of simultaneous Call Associated Temporary Signaling Connections (CA-TSCs) that can exist in the Signaling Group. Valid entries are **0** to **400**; the default is **0**.
Trunk Group for NCA TSC	The ISDN-PRI trunk group number whose incoming call handling table will be used to handle incoming NCA-TSCs through the signaling group. Valid entries are **1** to **666**; the default is blank.
Trunk Brd	Displayed when Associated Signaling is n (indicates NFAS). Enter a 5-character DS1 Interface circuit pack number that has trunk members belonging to this Signaling Group. Default is blank.
Interface ID	Displayed when Associated Signaling is **n** (indicates NFAS). An interface ID (**0** to **31**) for the corresponding DS1 Interface circuit pack.

3. Press NEXTPAGE
4. The switch displays the second page of the screen.

```
change signaling-group 4                                        Page 2 of 5    SPE A

                            ADMINISTERED NCA TSC ASSIGNMENT

Service/Feature:                          As-needed Inactivity Time-out (min):
 TSC   Local                                                        Adj.    Mach:
Index   Ext.     Enabled  Established      Dest. Digits     Appl.     Name     ID
  1:   60010        y      permanent         29998          dcs
  2:   60030        y      permanent         29997          audix    audixcl    1
  3:                n
  4:                n
  5:                n
  6:                n
  7:                n
  8:                n
  9:                n
 10:                n
 11:                n
 12:                n
 13:                n
 14:                n
 15:                n
 16:                n
```

Figure 9-10. Example Signaling Group Screen — Host (Page 2)

Use the entries described in the table below to assign a TSC Index.

Table 9-9. Signaling Group Screen Entries — Host (Page 2)

Field	Description
Service/Feature	The service type for all administered NCA-TSCs assigned in this Signaling Group. Valid entries are **accunet**, **i800**, **inwats**, **lds**, **mega800**, **megacom**, **multiquest**, **nca-tsc**, **operator**, **sdn**, **sub-operator**, **wats-max-bnd**, and [user-defined services]. Default is blank.
As-needed Inactivity Time-out (min)	The inactivity time-out for as-needed NCA-TSCs assigned in the Signaling Group. An as-needed administered NCA-TSC staying inactive in this time period will be removed from service. Valid entries are **10** through **90**; default is blank.

Table 9-9. Signaling Group Screen Entries — Host (Page 2) — *Continued*

Field	Description
TSC Index	Display only field. Choose a free index. The administered NCA TSC index represents one DCS logical channel connecting any two PBXs.
Local Ext	Enter an unassigned extension number. This assigns an extension on the switch to the administered NCA-TSC.
Enabled	**y**
Established	**permanent**
Dest. Digits	Enter the digits needed to route the administered NCA-TSC to the far-end switch. Valid entries are digits **0**-**9** and can include up to 15 digits. Default is blank.
Appl.	**gateway**
Machine ID	Enter the Machine ID of the far-end switch this administered NCA-TSC is to be connected to.
Add. Name	Enter the name of the DEFINITY AUDIX system as it appears on the host G3r/R5r User Defined Adjunct Names screen.

5. Press ENTER .
6. Continue with Task 9-2C1.

Task 9-2C1: Assigning the ISDN TSC Gateway Channel at the Host Switch)

This task maps the signaling group/TSC-index pair assigned in Task 9-2C1 to the processor channel used by the DEFINITY AUDIX system assigned in Task 9-2C1.

Perform these steps at the host switch administration terminal.

1. Enter **change isdn tsc-gateway**

   The ISDN TSC Gateway Channel Assignment screen appears.

```
change isdn tsc-gateway                                          Page 1 of 2    SPE A

                         ISDN TSC GATEWAY CHANNEL ASSIGNMENT

   Sig    Adm'd NCA   Processor   Appli-        Sig   Adm'd NCA   Processor   Appli-
  Group  TSC Index    Channel    cation       Group  TSC Index    Channel    cation
  1: 2       2           14       audix        17:
  2:                                           18:
  3:                                           19:
  4:                                           20:
  5:                                           21:
  6:                                           22:
  7:                                           23:
  8:                                           24:
  9:                                           25:
 10:                                           26:
 11:                                           27:
 12:                                           28:
 13:                                           29:
 14:                                           30:
 15:                                           31:
 16:                                           32:
```

Figure 9-11. Example of an ISDN TSC Gateway Channel Assignment Screen

2. Use the entries in the table below to complete the Gateway Channel Assignment Screen.

Table 9-10. ISDN TSC Gateway Channel Assignment Screen Entries

Field	Description
Sig Group	Enter the Group Number from page 1 of the Signaling Group screen in Task 9-2C1.
Adm'd NCA TSC Index	Enter the TSC Index chosen on the Signaling Group screen in Task 9-2C1.
Processor Channel	Enter the processor channel chosen in Task 9-2C1.
Application	**audix**

3. Press ENTER.
4. Continue with Task 9-2C1.

Task 9-2C1: Administering DCS Via ISDN-PRI at the Remote Switch

Before assigning the Signaling Group at the remote switch, complete the following steps to enable voice communications on the DCS connection between the remote switch and the host switch. This is part of the DCS administration. The DEFINITY AUDIX system uses the existing DCS trunks for both data and voice communications. Refer to the DEFINITY Communications System documentation for more information.

1. Set up DCS on a trunk group between the remote switch and the host switch with `Used for DCS` set to **y** and `DCS Signaling` set to **d-chan** (**change trunk-group *number***). In the example, the trunk group is 65.
2. Set up a Uniform Dial Plan code for the trunk group between the remote switch and the host switch (**add udp *number***).
3. Define the UDP Code on the AAR (Automatic Alternate Routing) Digit Analysis Table (**change aar analysis *number***). The AAR digit analysis table is used to route the call.
4. Define a route pattern for the UDP Code on the trunk group (65 in the example) (**add route-pattern *UDP Code***).

The Signaling Group screen assigns the call-associated (CA) and non-call associated (NCA) temporary signaling connections (TSCs) for ISDN-DCS trunk groups on the remote switch.

Perform these steps at the remote switch administration terminal.

1. Enter **change signaling-group *x*** where *x* is the signaling group associated with the DCS non-call associated temporary signaling connection (NCA-TSC) on the host switch. (It is assumed that DCS is already administered on this signaling channel.)

   The switch displays page 1 of the Signaling Group screen.

```
change signaling-group 1                                        Page 1 of 5    SPE A

                                  SIGNALING GROUP

Group Number: 1        Associated Signaling? y           Max number of NCA TSC: 0
                          Primary D-Channel: 01C0416      Max number of CA TSC: 0
                                                        Trunk Group for NCA TSC:
          Trunk Group for Channel Selection:
```

Figure 9-12. Example Signaling Group Screen — Remote (Page 1)

2. Use the entries in the table below to complete page 1 of the Signaling Group screen.

Table 9-11. Signaling Group Screen Entries — Remote (Page 1)

Field	Description
Group Number	Displays the signaling group number
Associated Signaling	**n** indicates Non-Facility Associated Signaling.
Primary D-channel	The port number associated with the DS1 Interface circuit pack port. Currently, with FAS and NFAS, it is always the 24th port on the DS1 Interface circuit pack. Default is blank.
Secondary D-channel	The port number associated with the DS1 Interface circuit pack port used for secondary D-channel signaling. Currently, with FAS and NFAS, it is always the 24th port on the DS1 Interface circuit pack. Default is blank.

Continued on next page

Table 9-11. Signaling Group Screen Entries — Remote (Page 1) — *Continued*

Field	Description
Max Number of NCA TSC	The maximum number of simultaneous Non-Call Associated Temporary Signaling Connections (NCA-TSCs) that can exist in the Signaling Group. This number includes all NCA-TSCs that are administered on Pages 2 through 5 of the screen and those NCA-TSCs that tandem through the switch in route to another switch in the network. Valid entries are **0** to **256**; default is **0**.
Max number of CA TSC	The maximum number of simultaneous Call Associated Temporary Signaling Connections (CA-TSCs) that can exist in the Signaling Group. Valid entries are **0** to **400**; default is **0**.
Trunk Group for NCA TSC	The ISDN-PRI trunk group number whose incoming call handling table will be used to handle incoming NCA-TSCs through the signaling group. Valid entries are **1** to **666**; default is blank.
Trunk Group for Channel Selection	The assigned trunk group number. Default is blank.
Trunk Brd	Displayed when `Associated Signaling` is **n** (indicates NFAS). Enter a 5-character DS1 Interface circuit pack number that has trunk members belonging to this Signaling Group. Default is blank.
Interface ID	Displayed when `Associated Signaling` is **n** (indicates NFAS). Enter an interface ID (**0** to **31**) for the corresponding DS1 Interface circuit pack.

3. Press NEXTPAGE.

   The switch displays the next page of the Signaling Group screen.

```
change signaling-group 1                                        Page 2 of 5    SPE A

                              ADMINISTERED NCA TSC ASSIGNMENT

Service/Feature:                          As-needed Inactivity Time-out (min):
 TSC   Local                                                        Adj.    Mach:
Index   Ext.     Enabled  Established      Dest. Digits     Appl.     Name     ID
  1:   29998        y      permanent         60010          dcs                 3
  2:   29997        y      permanent         60030          audix    audixcl    4
  3:                n
  4:                n
  5:                n
  6:                n
  7:                n
  8:                n
  9:                n
 10:                n
 11:                n
 12:                n
 13:                n
 14:                n
 15:                n
 16:                n
```

Figure 9-13. Example Signaling Group Screen — Remote (Page 2)

4. Use the entries described in the table below to assign a TSC Index.

Table 9-12. Signaling Group Screen Entries — Remote (Page 2)

Field	Description
Service Feature	The service type for all administered NCA-TSCs assigned in this Signaling Group. Valid entries are **accunet**, **i800**, **inwats**, **lds**, **mega800**, **megacom**, **multiquest**, **nca-tsc, operator**, **sdn**, **sub-operator**, **wats-max-bnd**, and [user-defined services]. Default is blank.
As-needed Inactivity Time-out (min)	The inactivity time-out for as-needed NCA-TSCs assigned in the Signaling Group. An as-needed administered NCA-TSC staying inactive in this time period will be removed from service. Valid entries are **10** through **90**. Default is blank.
TSC Index	Enter the `TSC Index` assigned to the host switch in Task 9-2C1. The administered NCA TSC index represents one DCS logical channel connecting any two PBXs.

Table 9-12. Signaling Group Screen Entries — Remote (Page 2) — *Continued*

Field	Description
Local Ext	The value entered in the `Dest. Digits` field for the host switch in Task 9-2C1.
Enabled	**y**
Establish	**permanent**
Dest. Digits	The value entered in the `Local Ext.field` for the host switch in Task 9-2C1.
Appl.	**audix**
Machine ID	The value entered in the `Machine ID` field for the far-end switch this administered NCA-TSC is to be connected to.
Adj. Name	Enter the name of the DEFINITY AUDIX system as it appears on the host G3r/R5r User Defined Adjunct Names screen.

5. Press [ENTER].
6. Continue with Task 9-2D.

Task 9-2D: Assigning the Hunt Group at the Remote Switch

This section contains step-by-step procedures to administer a hunt group for the DEFINITY AUDIX system on a remote switch. These procedures assume that DCS connectivity is already administered.

NOTE:
If the DEFINITY AUDIX system is not supporting a DCS network, this section does not apply.

If the DEFINITY AUDIX system is supporting a DCS network, then assign the host switch DEFINITY AUDIX system AUDIX extension number to the remote DEFINITY AUDIX system (rem-audix) hunt group. No host switch administration is required.

1. At the remote switch administration terminal, enter **add hunt-group *number*** to assign a new hunt group.

   The switch displays the Hunt Group screen.

```
add hunt-group 12                                          Page 1 of 41    SPE A

                                   HUNT GROUP

      Group Name: AUDIX
    Group Number: 12             Group Extension: 62000      Group Type: ucd
                                           Skill: n                 ACD? n
           Queue? n                       Vector? n
   Security Code:      Night Service Destination:                   COR: 1
ISDN Caller Disp:                  Coverage Path:                    TN: 1



                                     Expected Call Handling Time (sec): 180
```

Figure 9-14. Example Hunt Group Screen — Page 1 (Remote Switch)

2. Use the entries in the table below to complete the screen.

Table 9-13. Hunt Group Screen Entries — Page 1 (Remote Switch)

Field	Entry
Group Number	Displays the hunt group number assigned to the hunt group when the **add hunt-group** command is entered. An **h** followed by this number is included in user coverage paths in Task 9-3A.
Group Extension	Enter an unused extension number of 3 through 5 digits to be assigned to the hunt group. This is the extension users will dial at the remote switch to access voice mail features.
Group Type	**ucd**
Group Name	The name you want display set users to see when they call the DEFINITY AUDIX system to access voice mail features. Use up to 15 characters. **AUDIX** must be part of the name, although you can use other characters in addition.

Table 9-13. Hunt Group Screen Entries — Page 1 (Remote Switch) — *Continued*

Field	Entry
Coverage Path	Leave this field blank. Do not assign a coverage path to this DEFINITY AUDIX hunt group. Sending a call to somewhere other than the hunt group can cause problems with the DEFINITY AUDIX system.
COR	Enter the class of restriction (COR) number that reflects the desired restriction for the DEFINITY AUDIX hunt group. For security reasons, the DEFINITY AUDIX hunt group should be assigned its own COR that is restricted from accessing all outgoing trunks or only those outgoing trunks needed for Outcalling or AMIS Analog Networking. It is recommended that the default COR not be used.
Security Code	Leave this field blank.
Message Center	**rem-audix**
ACD	**n**
Queue?	**n**
Night Service Destination	Enter the destination where calls to this hunt group will redirect when the hunt group is in the night service mode. Allowable entries are an assigned extension number, the attendant, or you can leave this field blank. This field will be left blank for most applications, but occasionally an application requires calls to be redirected when the hunt group is in night service mode.
Vector?	**n**
ISDN Caller Disp	Enter **grp-name** or **mbr-name** to specify whether the hunt group name or member name, respectively, will be sent to the originating user (hunt group name will be used in most applications). This field is required if the ISDN-PRI option on the switch System-Parameters Customer-Options screen is enabled. If ISDN-PRI is not enabled, this field must be blank.
TN	Tenant Partition Number. Default is **1**.
Expected Call Handling Time (sec)	This field appears only if the `Vectoring (Advanced Routing)` field on the System-Parameters Customer-Options screen is set to yes. Enter a number from **0** to **9999**.

3. Press NEXTPAGE.

   The switch displays Page 2 of the Hunt Group screen.

```
add hunt-group 12                                          Page 2 of 41    SPE A

                                   HUNT GROUP

                Message Center: audix           AUDIX Extension: 12000
     Message Center AUDIX Name:                          Primary: y
                 LWC Reception: none
                    AUDIX Name:
         Messaging Server Name:
```

Figure 9-15. Example Hunt Group Screen — Page 2 (Remote Switch)

4. Use the entries in the table below to complete page 2 of the Hunt Group screen.

Table 9-14. Hunt Group Screen Entries — Page 2 (Remote Switch)

Field	Description
Message Center	**rem-audix**
AUDIX Extension	Enter the extension number assigned to the DEFINITY AUDIX system hunt group at the host switch.
Message Center AUDIX Name	Enter the name assigned on the User Defined Adjunct Names screen in Task 9-2A.
Primary?	Enter **y** to indicate that the specified AUDIX or Messaging Server is the primary adjunct.

Table 9-14. Hunt Group Screen Entries — Page 2 (Remote Switch) — *Continued*

Field	Description
LWC Reception	**none**, **audix**, or **spe**
AUDIX Name	Enter the name of the DEFINITY AUDIX system as it appears on the User Defined Adjunct Names screen.
Messaging Server Name	Name of the server as it appears on the User Defined Adjunct Names screen.

5. Press ENTER.

   Leave the remaining pages of the screen blank.

6. Continue with Task 9-2E.

Task 9-2E: Testing the DCS Network

Complete the following steps to test the Call Answer, Voice Mail, and Leave Word Calling features for each remote test subscriber added in Task 7-1 in Chapter 7.

1. Create a test Call Answer message.
   a. From one of the test telephones, call the extension of the remote subscriber.
   b. Let the telephone ring until the DEFINITY AUDIX system answers.
   c. After the system greeting and the tone, leave a test message (for example, “This is a test Call Answer message.”)
   d. Hang up.
2. Retrieve the Call Answer message.
   a. If you are in contact with someone at the remote site, ask that person to check the MWI on the remote subscriber’s phone. The MWI signal is either a lamp on the telephone or a stutter dial tone that appears within a minute after leaving the test message. If it is on, Continue with the next step. If the MWI does not activate, refer to the troubleshooting procedures in *DEFINITY AUDIX System — Maintenance*, 585-300-121 to activate the MWI.
   b. Call the remote DEFINITY AUDIX extension. If the remote switch is a System 85 or G2, this will be the same number as for the local DEFINITY AUDIX system. For all other remote switch types, the DEFINITY AUDIX extension for the remote switch will be different from the extension for the local DEFINITY AUDIX system.

c. When the DEFINITY AUDIX system answers and prompts you for your extension, enter the remote subscriber's extension and press [#].

d. When the DEFINITY AUDIX system prompts you for your password, press [#]. There is no password assigned to this extension.

e. If the Name Record by Subscriber feature is on, the DEFINITY AUDIX system prompts you to record a name. Record a test name, for example, "test name."

f. Press [2] and then press [0] to listen to the message you recorded from the first test extension.

g. After listening to the message, press [*] [D] to delete the message.

3. Create a test Voice Mail message.

a. Call the local (host) DEFINITY AUDIX extension.

b. After the DEFINITY AUDIX system answers and prompts you for your extension, press [#].

c. When the DEFINITY AUDIX system prompts you for your password, press [#]. There is no password assigned to this extension.

d. Press [1] to create a Voice Mail message. After the tone, speak a test message, for example "This is a test Voice Mail message."

e. When you finish the message, press [#] to approve the message.

f. When prompted for a destination extension, enter the extension of the remote test subscriber and press [#] to end the addressing.

g. Press [#] again to deliver the test message.

h. Hang up.

4. Retrieve the test Voice Mail message.

a. If you are in contact with someone at the remote site, ask that person to check the MWI. The MWI is either a lamp on the telephone or a stutter dial tone that appears on the remote test subscriber's telephone one minute after leaving the test message. If it is on, Continue with Step b. the MWI does not activate, refer to the troubleshooting procedures in *DEFINITY AUDIX System — Maintenance*, 585-300-121activate the MWI.

b. Call the remote DEFINITY AUDIX extension to retrieve the message. If the remote switch is a System 85 or G2, this will be the same number as for the local DEFINITY AUDIX system. For all other remote switch types, the DEFINITY AUDIX extension for the remote switch will be different from the extension for the local DEFINITY AUDIX system.

c. After the DEFINITY AUDIX system answers and prompts you for your extension, enter the remote test subscriber's extension and press [#].

d. When the DEFINITY AUDIX system prompts you for your password, press [#]. There is no password assigned to this extension.

e. Press [2] then press [0] to listen to the message you recorded.

f. After listening to the message, press [*] [D] to delete the message.

g. Hang up.

5. Send a Leave Word Calling (LWC) message to and from the remote test subscriber. If possible, have someone check the MWI at the remote site.
6. Repeat Steps 1 through 5 for each DCS remote test subscriber.
7. Continue with Task 9-3.

Task 9-3: Administering the Subscribers on the Remote Switch

To be able to use the DEFINITY AUDIX system, all DEFINITY AUDIX system subscribers on the remote switch must be assigned the appropriate switch features and coverage path.

NOTE:
Before the subscribers can log into the DEFINITY AUDIX system, the DEFINITY AUDIX system administrator must administer the DEFINITY AUDIX system. (The DEFINITY AUDIX system will not answer unless the `Switch Number` field on the DEFINITY AUDIX system Subscriber screen is filled in for each subscriber.)

Task 9-3A: Assigning the Call Coverage Path for Subscribers (Remote Switch)

Define a call coverage path for subscribers with the DEFINITY AUDIX hunt group set up in Task 9-2D as a coverage point. You may need to define several call coverage paths depending on how the customer wants to handle call coverage for groups of subscribers. You may need to add the DEFINITY AUDIX hunt group as another coverage point for existing coverage paths.

To define a call coverage path for subscribers, perform the following procedure at the remote switch administration terminal.

1. Enter **add coverage path *number*** where *number* is the number of the coverage path.

   The switch displays the Coverage Path screen.

```
change coverage path 3                                        Page 1 of 1     SPE A

                                    COVERAGE PATH

                        Coverage Path Number: 3

                            Next Path Number:                 Linkage:

   COVERAGE CRITERIA

      Station/Group Status     Inside Call           Outside Call
             Active?                n                     n
               Busy?                y                     y
       Don't Answer?                y                     y     Number of Rings: 2
                All?                n                     n
ND/SAC/Go to Cover?                 y                     y

COVERAGE POINTS

       Terminate to coverage pts. with Bridged Appearances? n
         Point1: h99               Point2:               Point3:
         Point4:                   Point5:               Point6:
```

Figure 9-16. Example of a Subscriber Coverage Path Screen

2. Use the entries in the table below to complete the Coverage Path screen

Table 9-15. Subscriber Coverage Path Screen Entries

Field	Entry	
Coverage Path Number	Displays the coverage path number assigned to the coverage path when the **add coverage path** command is entered. This number should appear in the Coverage Path field on all subscriber station screens on the remote switch so that user stations cover to the DEFINITY AUDIX voice ports.	
Coverage Criteria	The conditions that, when met, cause the call to redirect to coverage. (The following conditions are suggestions.)	
Station/Group Status	Inside Call	Outside Call
Active?	**n**	**n**
Busy?	**y**	**y**
Don't Answer?	**y**	**y**
All?	**n**	**n**
SAC/Go to Cover?	**y**	**y**

Table 9-15. Subscriber Coverage Path Screen Entries — *Continued*

Field	Entry
Linkage	This is a display-only field that shows up to two additional coverage paths, when assigned, that the Next Path Number field entry is linked to.
Next Path Number	Optional. Enter the number of the coverage path to which a call will be redirected in case of coverage failure at the current path.
Number of Rings	Enter the number of rings from **1** through **99**. Two rings (default) is the recommended timing. This is the number of rings a user's voice terminal rings before the switch sees a *no answer* condition and sends the call to the first coverage point.
Coverage Points	The Call Coverage Paths. For Point1, Point2, or Point3, enter **h** followed by the DEFINITY AUDIX hunt group number assigned in Task 9-2D.

3. Press ENTER.
4. Continue with Task 9-3B.

Task 9-3B: Modifying the Station Screen for Each Remote Subscriber

At the remote switch administration terminal, modify the station screen for each DEFINITY AUDIX remote subscriber as follows:

1. Set `Coverage Path` to the subscriber coverage path defined in Task 9-3A.
2. Set `LWC Reception` to **audix**
3. Set `LWC Activation?` to **y** if the subscriber is assigned the Leave Word Calling feature.
4. Set `Redirect Notification` to **y**
5. Set `Message Waiting Indicator?` to **led** or **neon** if the voice terminal has an MWI lamp. This applies to 500, 2500, and 7104A voice terminals only.
6. Under `BUTTON ASSIGNMENTS`, enter the following button assignments when needed to interact with DEFINITY AUDIX system features:
   - **call-fwd**
   - **goto-cover**
   - **lwc-store**

- **send-calls**

7. Press [ENTER].
8. Continue with Chapter 10.

   The Software Specialist or installing technician must complete Task 10-1 in Chapter 10 to finish the installation and initial administration tasks. The rest of the tasks in this chapter must be completed by the Project Manager.

Customer Acceptance

10

With the exception of Task 10-1, this chapter lists the tasks that the Project Manager must complete with the customer to hand the DEFINITY AUDIX system over to the customer. Most of these tasks are part of the Streamlined Implementation process. Therefore, they are not described fully in this document, but are listed here as a final check to make sure they are completed.

Task 10-1: Alarm Origination Administration Test and Status MO Disk

Worksheet C-9 indicates whether alarm origination is to be activated through *AUDIX only*, through *switch only*, or through *audix & switch*. If alarm origination is to be set up through the switch only, skip to Step 9 of this task.

You will perform this task jointly with personnel at the INADS center, which is part of the Technical Services Organization (TSO) at Lucent.

The steps listed below present a typical execution of this task. The steps for this site may vary, depending on the approach you agree upon with the INADS personnel.

1. Call the INADS center and request administration and test of alarm origination for this DEFINITY AUDIX system.
2. If you have not already done so, log in to the DEFINITY AUDIX system terminal as **craft**. Refer to Task 5-1A for the login procedure.
3. Type **change system-parameters maintenance** and press RETURN.

   The system displays the System-Parameters Maintenance screen

```
drmfb12     Active    Alarms:   wA  Thresholds: none                    Logins: 1
change system-parameters maintenancer          ClearFld        Help Page 1 of 2
                      SYSTEM-PARAMETERS MAINTENANCE

   Product Identification Number: __________
            Machine Network Name: drmfb12
                 System Location: ________________________________

 Manual Trouble Reporting Number: 1-800-56-AUDIX
 Automatic Alarm Reporting Telephone Number:
  ____________________________________________________________

 Remote Modem Initialization String:message sending privileges for communities
  ate1&f0&b1&k0&n6&u2s0=1s13=1y0&w0

 Alarm Origination Remote Access Port Baud Rate: 1200
 outcalling           to administer outcalling schedules
 System Notes:
 ____________________________________________________________________________
 ____________________________________________________________________________
 ____________________________________________________________________________
 ____________________________________________________________________________

e
```

Figure 10-1. System-Parameters Maintenance Screen - Page 1

With information given to you by the Project Manager and with the help of the INADS personnel, fill in all fields on the screen.

4. Verify that the following fields are filled in:
   - Product Identification Number
   - Machine Network Name
   - System Location
   - Automatic Alarm Reporting Telephone Number
   - Remote Modem Initialization String

     The default initialization string listed below is configured for US Robotics 28.8 and 33.6 modems:

     AT&F0E1X4&A3&B1&K0&N6&U2S0=1S13=1Y0&W0

     The DEFINITY AUDIX system will input this string into the non-volatile memory whenever you reboot the system.

CAUTION:
Do not modify the initialization string unless the remote service center tells you to do so.

If you have a different modem, see "Modem Option Settings (for Port C Modems)" in Appendix H to optimize this initialization string.

- Alarm Origination Remote Access Port Baud Rate

5. Press NEXTPAGE (F7) to display the second page of System-Parameters Maintenance screen

```
change system-parameters maintenance                                Page 2 of 2
                      SYSTEM-PARAMETERS MAINTENANCE

                  Alarm Origination Active? n
           All Alarms Resolved Notification? n

     ALARM ACTION:
                                                Major Minor
                                        System: call  call
                                   SCSI Devices: call  call
                                    Filesystems: call  call
                                    Switch Link: call  call
                                    Voice Ports: call  call
                                     Networking: call  call
                                    Maintenance: call  call

Close Contacts on Alarm Origination Failure? y

        Maximum Number of Event Log Entries: 10000

enter command: change system-parameters maintenance
```

Figure 10-2. System-Parameters Maintenance Screen - Page 2

If Worksheet C-9 indicates that alarm origination is to be activated through the *switch only*, enter **n** in the Alarm Origination Active? field. If either *audix only*, or *audix & switch*, is indicated on the worksheet, enter **y** in the Alarm Origination Active? field.

6. Ask the INADS personnel to log in and display the System-Parameters Maintenance screen. The following steps should then be completed by INADS personnel:

   a. Check that the login is successful.

b. Check that the Product Identification Number on the System-Parameters Maintenance screen is correct.

c. Enter the **test alarm-origination** command, terminate the session, and hang up.

d. Check the appropriate trouble ticket. The trouble ticket should show **INADS, n, MINOR** in the description field to indicate that a minor off-board alarm was reported to INADS. There may be additional text in the description field if other resolved alarms were reported.

e. Make a second call, log in to the DEFINITY AUDIX system, and check the error log to verify that there are no problems.

f. Terminate the session and hang up.

7. If all the fields are properly filled in, press [F1] (Cancel) to exit the screen.

   This completes the alarm origination test.

8. Verify the status of the add mo-disk function performed in Task 5-3, by typing **status mo-disk** followed by [RETURN].

   The system displays the Status MO-Disk screen.

```
drmfb15     Active    Alarms:  m A  Thresholds: none                Logins: 2
status mo-disk                                                     Page 1 of 1
                          STATUS MO-DISK

  MO Drive Location: 01C0602
             Status: In service, idle

DRIVE:
           Equipped? y
             Vendor: OLYMPUS
              Model: MOS350
           Revision: T102

CARTRIDGE:
           Equipped? y              Self-Diagnostics: pass
       Administered? y                    Write Test: pass
      Write Enabled? y                     Read Test: pass
   Capacity(Mbytes): 640MB               Verify Test: pass



Status Command Complete
enter command:
```

Figure 10-3. Status MO-Disk Screen

9. The Status field should display *In service, idle*. If it does not, see *DEFINITY AUDIX System — Maintenance*, for information to correct the problem.
10. Continue with Task 10-2 .

Task 10-2: Perform a Walk Through

Perform a walk-through with the customer in which you do the following:

- Show the customer the System-Parameters Customer-Options screen to verify that the purchased ports and features are activated

  NOTE:
  Log in to the administration terminal as **cust** to display this screen.

- Verify that the second blank magneto-optical disk is present

  NOTE:
  The first is installed in the magneto-optical disk drive for system backups.

- Verify that all DEFINITY AUDIX system documentation is present, and then tell the customer how to use the documentation.
- Provide the customer with a list of telephone numbers for technical support.

Task 10-3: Demonstrate Updated Customer Database

Show the customer the Test Alarm-Origination Short screen to verify that the customer database is updated.

Task 10-4: Project Review

Conduct a project review according to current procedures.

Switch Carrier Configuration Worksheets

A

To install a DEFINITY AUDIX system in a System 75, DEFINITY, or ProLogix at a customer site, the switch must have two[1] contiguous port slots available in a carrier. If the switch does not have two contiguous port slots available, the system will have to be rearranged or a new carrier purchased.

NOTE:
Verify that the switch and switch software load can accommodate the DEFINITY AUDIX system. See *System Description* (585-300-214) for the load requirements of the DEFINITY AUDIX system.

Whoever is assigned the task of reconfiguring the circuit packs should complete the following steps:

1. Complete Worksheet A-1. In the first row, indicate the type of carrier, such as port carrier or control carrier. In the remaining rows, write the circuit pack currently occupying the indicated port slot. The total number of port slots depends on the type of switch and function of the carrier.
2. Using the carrier configuration rules in the correct document for the customer's switch, determine how two[1] contiguous port slots can be obtained for the DEFINITY AUDIX system.
   - For G3V2 or higher, use *DEFINITY Communications System Generic 3 System Description and Specifications*, 555-230-201, Issue 2 or higher.

   In reconfiguring the circuit packs use the following guidelines:
   - Move as few packs as possible; look for a carrier that has one or two contiguous port slots already available.
   - Consider the costs of testing once the carrier has been rearranged (for example, tie trunks and DS1 packs are more expensive to test than some other types of circuit packs).
   - Keep in mind the ease with which circuit packs can be moved. Circuit packs are listed below in order of easiest to most difficult to move:

1. For the ProLogix, the DEFINITY AUDIX system only needs one slot if it is installed in slot 6.

— Analog line packs: stations, CO, WATS, DID, and AUX

— Hybrid line packs

— Digital line packs

NOTE:
(Try to avoid packs associated with any of the following: data sets with many feature buttons, console, data lines, CEO's line, speech synthesizers, announcements.)

— BRI line packs

— Tone detector packs

— Tie Trunk packs

— ISDN packs/DS1 packs

— Pooled modem packs

— Tone Clock Board (not movable)

— ASAI-related packs: BRI/LAN Gateway

The above list is not complete. The switch may include other packs that are difficult to move.

3. Complete Worksheet A-2 to show which two[2] contiguous slots the DEFINITY AUDIX system will use and where the other circuit packs should be placed. Give the completed Worksheet A-2 to the technician who will rearrange the carrier circuit packs.

Worksheet A-1: Port Slot Assignments (Before Carrier Rearrangement)

Date _____

Prepared by _____

Contact telephone number _____

Complete the following worksheet to indicate how circuit packs are currently arranged in the switch carrier.

2. The DEFINTY AUDIX system only needs one port slot in a ProLogix if it is installed in slot 6.

On the worksheet, the slots are numbered as seen from the front of the carrier, with slot 1 on the far left and slot 20 on the far right[3]. It is not necessary to fill in the worksheet for all existing circuit packs. Specify only those circuit packs that must be moved (if any) in the carrier reconfiguration process.

	Carrier A	Carrier B	Carrier C	Carrier D	Carrier E
Carrier Function					
Port slot 1					
Port slot 2					
Port slot 3					
Port slot 4					
Port slot 5					
Port slot 6					
Port slot 7					
Port slot 8					
Port slot 9					
Port slot 10					
Port slot 11					
Port slot 12					
Port slot 13					
Port slot 14					
Port slot 15					
Port slot 16					
Port slot 17					
Port slot 18					
Port slot 19					
Port slot 20					

3. The slot order is different for a ProLogix. The Prologix is a stacked cabinet with slot 1 - 5 on the bottom, and slots 6 - 10 on top.

Worksheet A-2: Port Slot Assignments (For Carrier Rearrangement)

Date _____

Prepared by _____

Contact telephone number _____

Complete the following worksheet to indicate how circuit packs should be arranged in the switch carrier before the DEFINITY AUDIX system is installed. On the worksheet, the slots are numbered as seen from the front of the carrier, with slot 1 on the far left and slot 20 on the far right.[4] It is not necessary to fill in the worksheet for all existing circuit packs. Specify only the new positions of circuit packs that must be moved (if any) and then indicate the two slots the DEFINITY AUDIX system is to occupy.

Use the information in this appendix to determine the carrier into which the DEFINITY AUDIX system should be installed.

	Carrier A	Carrier B	Carrier C	Carrier D	Carrier E
Carrier Function					
Slot 1					
Slot 2					
Slot 3					
Slot 4					
Slot 5					
Slot 6					
Slot 7					
Slot 8					
Slot 9					
Slot 10					
Slot 11					
Slot 12					
Slot 13					
Slot 14					
Slot 15					
Slot 16					
Slot 17					

4. The slot order is different for a ProLogix. The Prologix is a stacked cabinet with slot 1 - 5 on the bottom, and slots 6 - 10 on top.

	Carrier A	Carrier B	Carrier C	Carrier D	Carrier E
Carrier Function					
Slot 18					
Slot 19					
Slot 20					

Worksheet A-3: Slot Locations for the DEFINITY AUDIX System Assembly

Date _____

Prepared by _____

Contact telephone number _____

In the worksheet below, specify the locations of the two[5] contiguous slots into which the DEFINITY AUDIX system assembly is to be installed.

Slot occupied by DEFINITY AUDIX System	Digital Port Equipment Location[1]
first	
second	

1. For System 75, the equipment location is a 5-character identifier; the first character identifies the carrier, the second and third characters identify the slot number, and the fourth and fifth characters identify the port number. As an example, a valid location for System 75 is **B0701**: carrier B, slot 07, and port 01. For all other switches, an additional 1 or 2 digits is prepended to the carrier, slot, and port location to identify the cabinet. For example, the location **02B0701** specifies cabinet 02, carrier B, slot 07, port 01.

5. The DEFINTY AUDIX system only needs one port slot in a ProLogix if it is installed in slot 6.

The two contiguous slots are administered with codes or left blank as listed in the following table. The assignments are dependent on the switch type and whether the switch link is administered as a Digital Port (DP) or Analog Port (AP).

Switch	DS or CL	Left-hand slot	Right-hand slot
All switch releases lower than 7	DP		TN754 TN2181
	AP		TN746
All switch releases 7.1 or greater	DP	**ADX12D** **ADX8D**	**TN568**
	AP	ADX12A	TN568

Worksheet A-4: Control Link Cable-Connection Configuration

Date _____

Prepared by _____

Contact telephone number _____

This worksheet is required if the DEFINITY AUDIX system is to be run in the control link (CL) integration mode. Complete the following worksheet to indicate how the control link cable is to be connected to the switch carrier.

Fill in the column that corresponds to the type of control link connection to the switch that will be installed. For each equipment item, indicate the number needed; or enter the length or type needed, if applicable.

Connect To:	Digital Line Interface TN 754, TN2181	PI/ Direct Connect	Processor Interface with IDI	Packet Gateway (G3r Only)
Carrier [A-E]				
Group 311 cable from Port B [#ft]		NA	NA	
MPDM [#]		NA	NA	
D8W-87 cable [#ft]		NA	NA	NA
103A Jack [#]		NA	NA	
25-pin cable [#ft]		NA	NA	

Connect To:	Digital Line Interface TN 754, TN2181	PI/ Direct Connect	Processor Interface with IDI	Packet Gateway (G3r Only)
H600-406(G_) cable [#ft] (Synch null modem cable)	NA		NA	NA
IDI [#]	NA	NA		
DSU	NA	NA	NA	
H600-405 cable [#ft]	NA	NA		NA
H600-210 cable [#ft]	NA	NA		NA
H600-347 cable [#ft]	NA	NA	NA	
BX.25 cable [#]	NA	NA	NA	

Switch Administration Worksheets

B

Before a software associate or software specialist can perform initial switch administration for the DEFINTY AUDIX system, he or she must obtain certain information from the customer. This appendix has worksheets that a software associate or software specialist and the customer should complete before installation. The worksheets include information necessary for required switch administration and any optional switch features the customer wants to use.

These tasks are described in detail in Chapter 4.

Worksheets are included for the following list of tasks. After the name of the task in the list, *digital port emulation* means the task may apply to DEFINITY AUDIX systems emulating digital ports in display set or control link integration mode. *Analog port emulation* means the task applies only to DEFINITY AUDIX systems emulating an analog port board. *Control link integration* means the task applies to systems operating in control link integration, regardless of its emulation type. *DCS environment* means the task applies to only those DEFINITY AUDIX systems being installed in a switch that operates in a DCS network. *Digital Networking* means the task applies to DEFINITY AUDIX systems that are digitally networked with other AUDIX systems. *All* means the task may apply to any DEFINITY AUDIX system, regardless of its mode of operation.

- Administer the voice ports as stations — Digital port emulation
- Assign the hunt group — Digital port emulation
- Assign the call coverage group for voice ports — Digital port emulation
- Assign the call coverage path for subscribers — Digital port emulation
- Administer the voice ports as stations — Analog port emulation
- Define the hunt group — Analog port emulation
- Assign the hunt group — Analog port emulation
- Assign the data link — Control link integration
- Processor channel assignment DCS BX.25 signaling for remote, non-G3r nodes — Control link integration, DCS environment
- Processor channel assignment DCS BX.25 signaling for remote G3r nodes — Control link integration, DCS environment

- Hop channel assignment DCS BX.25 Signaling for the host — Control link integration, DCS environment
- Assign remote switch hunt group — Control link integration, DCS environment
- Assign the call coverage path for DCS remote switch — Control link integration, DCS environment
- Assign the processor channels for an ISDN Gateway for a non-G3r host — Control link integration, DCS environment
- Assign the processor channels for an ISDN Gateway for a G3r host — Control link integration, DCS environment
- Define the ISDN signaling group for the host — Control link integration, DCS environment
- Define the signalling group for remote nodes — Control link integration, DCS environment
- Assign the ISDN RSC gateway — Control link integration, DCS environment

Because some of the information needed for these tasks depends on whether the DEFINITY AUDIX system is using digital port emulation or analog port emulation, a separate set of worksheets is included for each. If the DEFINITY AUDIX system is running in control link (CL) integration in a DCS environment, additional copies of the relevant worksheets are needed for each remote switch in the DCS network.

In this appendix, the following conventions apply for values listed in the right-hand column of the worksheets:

- [values in plain type and brackets] are the defaults
- **[values in bold type with brackets]** are recommended
- **values in bold type with no brackets** are required

Worksheet B-1: Administer the Voice Ports as Stations (Digital Port Emulation)

Date _____

Prepared by _____

Contact telephone number _____

The information in the following tables is required for administering the DEFINITY AUDIX voice ports on the switch. For more information on these fields, see Chapter 4.

For digital port emulation, DEFINITY AUDIX can emulate either the TN754 circuit pack (8 port board) or the TN2181 circuit pack (12 port board). In either case, all digital ports must be administered on the switch (either 8 or 12) and on the DEFINITY AUDIX system regardless of how many ports the customer purchased. However, only the number of ports actually purchased are administered in the hunt group.

`Extension` Complete next table.	See next table
`Set type options` (TN754 and TN2181)	**7405D** (S75, G1, G3V1-V4, R5, R6, ProLogix R6) **ADX16D** (G3R7 and higher; ProLogix R7 and greater)[1]
`Port` Complete next table.	See next table
`Name` Complete next table.	See next table
`Lock Messages`	**n**
`Security Code`	leave blank
`Coverage Path` Enter the number you want to use to identify the coverage path for voice ports. This coverage path should cover all calls to the DEFINITY AUDIX hunt group.	

`COR` To prevent toll fraud, Lucent Technologies recommends that you select a Class of Restriction (COR) for voice ports such that subscribers can only call other numbers with the *same* COR. If, after careful consideration, you find that subscribers do need to be able to call numbers with different CORs, add permissions for these (one at a time) as required. (The AMIS Analog Networking, Digital Networking, Message Delivery, and Outcalling features require that subscribers be able to access outside lines.) See *DEFINITY AUDIX System — Administration*, 585-300-507 for more information on preventing toll fraud.	
`COS` Select a class of service (COS) for the voice ports that permits the Call Forwarding all Calls and the Data Privacy features to be activated. Lucent Technologies recommends that the COS permit *only* these features to be activated.	
`LWC Reception`	System 75, G1, G3V1 with 8-port emulation ■ audix (G3r) ■ ap-spe (System 75 R1V3) ■ msa-spe (G1, G3iV1, G3vsV1) G3i/G3s/G3vs/R5vs/R5si ■ msa-spe G3r ■ audix
`LWC Activation`	y
`SMDR (CDR) Privacy`	**[n]**
`Redirect Notification`	**[n]**
`Bridged Call Alerting`	**[n]**
`Coverage Message Retrieval`	**[y]**
`Auto Answer`	**[n]**
`Data Restriction`	**[n]**
`Idle Appearance Preference`	**[n]**
`Restrict Last Appearance` Complete next table.	See next table
`Coverage Module`	**[n]**
`Messaging Server Name` (G3r only)	leave blank

`AUDIX Name` (G3r only) This name appears on the switch USER-DEFINED ADJUNCT NAMES screen.	
`Display Language` (G3i-Global only)	**English**
`Feature Module` (S75 and G1 only)	**[n]**
`Headset` (S75 only)	**[n]**
Client Room Redirection	**Y**

1. ADX16D is the recommended set type for digital port emulation in all DEFINTY and ProLogix switches R7 and above.

Worksheet B-2: Assign the Hunt Group (Digital Port Emulation)

Date _____

Prepared By _____

Contact Telephone Number _____

The information in the following tables is required for assigning the hunt group. Use Table B-2 for G3V2 and higher and ProLogix.

Enter the location, name, and extension for each of the 12 voice ports in the worksheet below:

Table B-1. G3V2 and Higher, ProLogix

DEFINITY AUDIX Port	Digital Port Equipment Location	Name	Extension	Restrict Last Appearance
1		**[AUDIX 1]**		**y**
2		**[AUDIX 2]**		**y**
3		**[AUDIX 3]**		**y**
4		**[AUDIX 4]**		**y**
5		**[AUDIX 5]**		**n**
6		**[AUDIX 6]**		**n**
7		**[AUDIX 7]**		**n**
8		**[AUDIX 8]**		**n**
9		**[AUDIX 9]**		**n**
10		**[AUDIX 10]**		**n**
11		**[AUDIX TRANSFER]**		**n**
12		**[AUDIX 12]**		**y**

The following information is required to define a hunt group (containing the voice port members) for the DEFINITY AUDIX system voice ports. Only the number of ports actually purchased should be administered in the hunt group.

`Group Number` Enter the number you want to use to identify the DEFINITY AUDIX hunt group. (This number, preceded by an **h**, is entered in the voice port COVERAGE PATH screen and in subscriber coverage paths.)	
`Group Extension` Enter the extension number you want subscribers to dial to retrieve their messages from the DEFINITY AUDIX system.	
`Group Type`	[ucd] (R5 or less) [ucd-mia] (R6 or greater)
`Group Name` Enter the name you want to appear on display sets when subscribers call the DEFINITY AUDIX system. ("AUDIX" must be included in the name for G3-MA to recognize this name as the DEFINITY AUDIX hunt group.)	
`Message Center`	**[none]** **[msa] (if using vectors)**
`ACD`	[n]
`Queue (y/n)?`	**[y]**
`Vector (y/n)?` The DEFINITY AUDIX hunt group may be vector-controlled if Call Vectoring is a feature on the switch.	**[n]**
`COR` Enter the class of restriction (COR) you want to assign to the extension that subscribers call to reach the DEFINITY AUDIX system. For security reasons, the DEFINITY AUDIX hunt group should be assigned its own COR that is restricted from accessing all outgoing trunks or only those trunks needed for Outcalling or AMIS Analog and Digital Networking. *The default COR is not recommended.*	
`ISDN Call Disp` If ISDN-PRI is enabled, enter **grp-name** or **mbr-name** to specify whether the hunt group name or number is sent to the originating subscriber.	

`Queue Length` A suggested length is the number of configured DEFINITY AUDIX voice ports. If you want a switch recorded announcement, enter the extension number here. Optional if the queue is *y* and must be blank if there is no first announcement.	

Worksheet B-3: Assign the Call Coverage Path for Voice Ports (Digital Port Emulation)

Date _____

Prepared By _____

Contact Telephone Number _____

The following information is required to define call coverage paths for the DEFINITY AUDIX voice ports.

`Coverage Path Number` Use the same coverage path number as Worksheet B-1.	
Coverage Criteria `Station/Group Status Active?` (Inside Call/Outside Call)	**[n/n]**
Coverage Criteria `Busy?` (Inside Call/Outside Call)	**[n/n]**
Coverage Criteria `Don't Answer?` (Inside Call/Outside Call)	**[n/n]**
Coverage Criteria `All?` (Inside Call/Outside Call)	**[y/y]**
`SAC/Go to Cover?` (Inside Call/Outside Call)	**[n/n]**
`Next Path Number` If desired, enter the second path to which calls will be directed in case the current path fails.	
`Number of Rings`	use the default

`Coverage Points`
`Point1`
Enter **h** followed by the DEFINITY AUDIX hunt group number from Worksheet B-2.	

Worksheet B-4: Assign the Call Coverage Path for Subscribers (Digital Port Emulation)

Date _____

Prepared By _____

Contact Telephone Number _____

The following information is required to define call coverage paths for subscribers. Complete a copy of this worksheet for each different coverage path.

`Coverage Path Number` Enter the number you want to identify the call coverage path for subscribers.	
Coverage Criteria `Station/Group Status Active?` (Inside Call/Outside Call)	**[n/n]**
Coverage Criteria `Busy?` (Inside Call/Outside Call)	**[y/y]**
Coverage Criteria `Don't Answer?` (Inside Call/Outside Call)	**[y/y]**
Coverage Criteria `All?` (Inside Call/Outside Call)	**[n/n]**
`SAC/Go to Cover?` (Inside Call/Outside Call)	**[y/y]**
`Next Path Number` If desired, enter the second path to which calls will be directed in case the current path fails.	
`Number of rings` Enter the number of rings (1–99) you want before a call goes to coverage. Three is recommended.	
Coverage Points For `Point1`, `Point2`, or `Point3`, enter **h** followed by the DEFINITY AUDIX hunt group number.	

Worksheet B-5: Administer the Voice Ports as Stations (Analog Port Emulation)

Date _____

Prepared By _____

Contact Telephone Number _____

The information in the following tables is required for administering the DEFINITY AUDIX voice ports on the switch. For more information on these fields, see *Switch Administration for the DEFINITY AUDIX System*, 585-300-509.

`User Defined Adjunct Names` (G3r only) Enter the name to be used for the DEFINITY AUDIX system on the USER DEFINED ADJUNCT NAMES screen (up to 7 characters).	
`Extension` — Complete next table.	See next table
`Type`	**2500** (S75, G1, G3V1-V4, R5, R6, G3i-Global) **ADX16A** (G3R7 and higher)
`Port` — Complete next table.	See next table
`Name` — Complete next table.	See next table
`Lock Messages`	**[n]**
`Coverage Path`	leave blank
`COR` To prevent toll fraud, Lucent Technologies recommends that you select a class of restriction (COR) for voice ports such that subscribers can only call other numbers with the *same* COR. If, after careful consideration, you find that subscribers do need to be able to call numbers with different CORs, add permissions for these (one at a time) as required. (The AMIS Analog Networking, Digital Networking, Message Delivery, and Outcalling features require that subscribers be able to access outside lines.) See *DEFINITY AUDIX System — Administration*, 585-300-507 for more information on preventing toll fraud.	

COS Select a COS for the voice ports that permits the Call Forwarding All Calls and the Data Privacy features to be activated. Lucent Technologies recommends that the class of service (COS) permit *only* these feature to be activated.	
Tests?	**[n]**
LWC Reception	**default value**
Headset (System 75 and G1 only)	[n]
LWC Activation	[n]
SMDR (CDR) Privacy (not available on System 75 and G1)	[n]
Redirect Notification	[n]
Off Premise Station	[n]
Coverage Message Retrieval	[n]
Auto Answer	[n]
Data Restriction	[n]
Call Waiting Indication	[n]
Att. Call Waiting Indication (not available on System 75 and G1)	[n]
Distinctive Audible Alert	[n]
Message Waiting Indicator	leave blank
Adjunct Supervision (G3i/s only)	[n]
R Balance Network (not available on System 75 and G1)	[n]
Switchhook Flash	[n]
AUDIX Name (G3r only)	leave blank
Message Server Name (G3r only)	leave blank
Audible Message Waiting (G3r only)	[n]

Worksheet B-6: Define the Hunt Group (Analog Port Emulation)

Enter the location, name, and extension for each of the purchased (maximum of 12) voice ports in the worksheet below.

DEFINITY AUDIX Port	Analog Port Equipment Location [1]	Name [2]	Extension
1		**[AUDIX 1]**	
2		**[AUDIX 2]**	
3		**[AUDIX 3]**	
4		**[AUDIX 4]**	
5		**[AUDIX 5]**	
6		**[AUDIX 6]**	
7		**[AUDIX 7]**	
8		**[AUDIX 8]**	
9		**[AUDIX 9]**	
10		**[AUDIX 10]**	
11		**[AUDIX TRANSFER]**	
12		**[AUDIX 12]**	

1. * For System 75, the equipment location is a 5-character identifier; the first character identifies the carrier, the second and third characters identify the slot number, and the fourth and fifth characters identify the port number. As an example, a valid location for System 75 is **B0701**: carrier B, slot 07, and port 01. For all other switches, an additional 1 or 2 digits is prepended to the carrier, slot, and port location to identify the cabinet. For example, the location **02B0701** specifies cabinet 02, carrier B, slot 07, port 01.
2. These are the recommended names.

Worksheet B-7: Assign the Hunt Group (Analog Port Emulation)

Date _____

Prepared By _____

Contact Telephone Number _____

The following information is required to define a hunt group (containing the voice port members) for the DEFINITY AUDIX system voice ports. Only administer the number of ports actually purchased.

`Group Number` Enter the number you want to use to identify the DEFINITY AUDIX hunt group. (This number, preceded by an **h**, is entered in the voice port COVERAGE PATH screen and in subscriber coverage paths.)	
`Group Extension` Enter the extension number you want subscribers to dial to retrieve their messages from the DEFINITY AUDIX system.	
`Group Type`	**ucd**
`Group Name` Enter the name you want to appear on display sets when subscribers call the DEFINITY AUDIX system. ("AUDIX" must be included in the name for G3-MA to recognize the name as a DEFINITY AUDIX group.)	
`Message Center`	[audix]
`ACD`	**n**
`Queue`	[y]
`Night Service Destination`	leave blank
`Vector (y/n)?` The DEFINITY AUDIX hunt group may be vector controlled if Call Vectoring is a feature on the switch.	[n]
`Security Code`	leave blank
`Coverage Path`	leave blank

`COR` Enter the class of restriction (COR) you want to assign to the extension that subscribers call to reach the DEFINITY AUDIX system. For security reasons, the AUDIX hunt group should be assigned its own COR that is restricted from accessing all outgoing trunks or only those trunks needed for Outcalling or AMIS Analog and Digital Networking. The default COR is *not* recommended.	
`ISDN Call Disp` (not available on System 75 or G1) If ISDN-PRI is enabled, enter **grp-name** or **mbr-name** to specify whether the hunt group name or number is sent to the originating subscriber.	
`AUDIX Extension` (System 75 R1V3 only) Enter the host switch (where the DEFINITY AUDIX system is located) DEFINITY AUDIX extension number. This is the number the remote DEFINITY AUDIX users will dial to access the hunt group. Normally this field is left blank for the DEFINITY AUDIX system.	
`Queue Length` A suggested length is the number of configured DEFINITY AUDIX voice ports.	
`Calls Warning Threshold`	leave blank
`Calls Warning Port`	leave blank
`Time Warning Threshold`	leave blank
`Time Warning Port`	leave blank
`First Announcement Extension` (not applicable for G3r) If you want a switch-recorded announcement, enter the extension number here.	
`First Announcement Delay (sec)` (not applicable for G3r) Optional if the queue is *y* and must be blank if there is no first announcement.	

Worksheet B-8a: Assign the Data Link (Control Link Integration for G3r Switches)

For G3r Switches Only

If the DEFINITY AUDIX system will not be installed in a DEFINITY Generic 3r switch, fill in Worksheet B-7a instead of this worksheet.

Only G3V4 and updated G3V2 and G3V3 support enhanced call transfer if using Digital Port emulation and Control Link integration. The transfer is invoked via a message from the AUDIX system to the switch on the control link.

Date _____

Prepared By _____

Contact Telephone Number _____

The following information is required to assign the data link for CL integration.

BX.25 Data Module

Name for the PGATE application	**[audix]**
PGATE board location (if adding new)	
Type	**BX.25**
Port The PGATE port location to which the BX.25 data module is connected	
Name The name to identify the DEFINITY AUDIX system connection	**[audix]**
Class of Restriction	
Endpoint Type	**adjunct**
DTE/DTC	[dte]
Baud Rate	**9600**
Error Logging	**[y]**
Remote Looparound Test	**[n]**
Permanent Virtual Circuit	

BX.25 Data Module

Highest PVC Logical Channel	
Switched Virtual Circuit	
Layer 2 Parameters: Number of Outstanding Frames	**[1]**
Retry Attempt Counter	**[2]**
Frame Size	**[135]**
Retransmission Timer (1/10 seconds)	**[10]**
Idle timer (1/10 seconds)	**[30]**
Layer 3 Parameters: Number of Outstanding Packets	**[2]**
Restart Timer (seconds)	**[8]**
Reset Timer (seconds)	**[180]**

Interface Link and Processor Channel

Interface Link:	
Link Number	**[1-8]**
Enabled	**y**
BX.25 Extension Enter the extension of the BX.25 data module	
Destination Number	**external**
Establish connection	leave blank
Connected Data Module	leave blank
Identification Enter the name from Worksheet B-5 for the User Defined Adjunct Names.	
Processor Channel:	
Processor channel number	**[1–128]**
Application	**[audix]**
Interface Link Number Must be the same as the Link Number set above	
Interface Channel Number This is the Logical Channel number used on the DEFINITY AUDIX SWITCH-LINK DCIU-SCI screen.	
Local Port	

Interface Link and Processor Channel

This is the Switch Port number used on the DEFINITY AUDIX SWITCH-LINK DCIU-SCI screen.	
`Remote Port` This is the AUDIX Port Logical Channel number used on the DEFINITY AUDIX SWITCH LINK DCIU-SCI screen. Enter the value entered for the Interface Channel Number above.	
`Adjunct Name` Enter the name from Worksheet B-5 for the User Defined Adjunct Names.	
`Machine-ID` Enter the Machine ID for the DEFINITY AUDIX system. This number must agree with the AUDIX field entry on the DEFINITY AUDIX SWITCH LINK DCIU-SCI screen.	**[1]**

DCS Worksheets

WORKSHEETS B-9 through B-15 are needed if the DEFINITY AUDIX system is running in CL integration in a DCS environment.

The Lucent Technologies Design Center designs a DEFINITY AUDIX system in a DCS environment. Complete these DCS worksheets only if the Design Center is not designing the DCS network.

Complete Worksheets B-9 through B-12 if the DCS network uses BX.25 signaling. Complete Worksheets B-13 through B-15 if the DCS network uses ISDN signaling.

Complete one set of DCS worksheets for each remote switch.

Worksheet B-9a: Processor Channel Assignment — BX.25 Signaling for Remote G3r switches (Control Link Integration, DCS Environment)

Complete one worksheet for each G3r remote switch.

User-Defined Adjunct Names: Enter the name used for the DEFINITY AUDIX system on the host switch USER-DEFINED ADJUNCT NAMES screen entered on Worksheet B-5.	
Processor Channel Assignments:	
`Processor channel number`	**[1–128]**
`Application`	**[audix]**
`Interface Link Number` This is the DCS link that connects this remote switch to the host switch.	
`Interface Channel Number` This is the Logical Channel number used on the DEFINITY AUDIX SWITCH-LINK DCIU-SCI screen that connects this remote switch to the host switch.	
`Local Port` This is the Switch Port number used on the DEFINITY AUDIX SWITCH-LINK DCIU-SCI screen.	
`Remote Port` This is the Logical Channel number used on the DEFINITY AUDIX SWITCH LINK DCIU-SCI screen.	
`Adjunct Name`	**[audix]**
`Machine-ID` This number must agree with the AUDIX field entry on the DEFINITY AUDIX SWITCH LINK DCIU-SCI screen.	

Worksheet B-10: Hop Channel Assignment BX.25 Signaling for the Host (Control Link Integration, DCS Environment)

The information in the following tables is required for each hop from a remote switch to the DEFINITY AUDIX system on the host switch.

Date _____

Prepared By _____

Contact Telephone Number _____

`Link` Enter the Interface Link from the host switch PROCESSOR CHANNEL ASSIGNMENT screen for the link that connects the remote switch to the host switch.	
`Chan` Enter the Interface Channel from the remote switch PROCESSOR CHANNEL ASSIGNMENT screen for the channel that connects the remote switch to the DEFINITY AUDIX system on the host switch.	
`Link` Enter the Interface Link from the host switch PROCESSOR CHANNEL ASSIGNMENT screen for the link that connects the host switch to the DEFINITY AUDIX system.	
`Chan` Enter the Remote Processor Channel from the remote switch PROCESSOR CHANNEL ASSIGNMENT screen for the channel that connects the DEFINITY AUDIX system to the remote switch.	
`Priority` Does not apply for G3r.	[h]

Worksheet B-11: Assign the Remote Switch Hunt Group — BX.25 Signaling (Control Link Integration, DCS Environment)

Date _____

Prepared By _____

Contact Telephone Number _____

Complete this worksheet for each DCS node that will have mailboxes for subscribers on the DEFINITY AUDIX system.

The following information is required to define a hunt group for the DEFINITY AUDIX system voice ports for a remote switch.

`Group Number` Enter the number you would like to use to identify the remote switch DEFINITY AUDIX hunt group. (This number, preceded by an **h**, is entered in the voice port COVERAGE PATH screen for the remote switch and in remote subscriber coverage paths.)	
`Group Extension` Enter the extension number you want subscribers to dial to retrieve their messages from the DEFINITY AUDIX system.	
`Group Type`	**ucd**
`Group Name` Enter the name you want to appear on display sets when subscribers call the DEFINITY AUDIX system. ("AUDIX" must be included in the name for G3-MA to recognize the name as a DEFINITY AUDIX group.)	
`Message Center`	**[rem-audix]**
`ACD`	**n**
`Queue`	**[n]**
`Night Service Destination`	leave blank
`Vector (y/n)?` The DEFINITY AUDIX hunt group may be vector controlled if Call Vectoring is a feature on the switch.	**[n]**
`Security Code`	leave blank
`Coverage Path`	[blank]

`COR` Enter the class of restriction (COR) you want to assign to the extension that subscribers call to reach the DEFINITY AUDIX system. For security reasons, the AUDIX hunt group should be assigned its own COR which has been restricted from accessing all outgoing trunks or only those trunks needed for Outcalling or AMIS Analog and Digital Networking. The default COR is *not* recommended.	
`ISDN Call Disp` (not available on System 75 and G1) If ISDN-PRI is enabled, enter **grp-name** or **mbr-name** to specify whether the hunt group name or number is sent to the originating subscriber.	
`AUDIX Extension` Enter the extension number assigned to the DEFINITY AUDIX system hunt group at the host switch on Worksheet B-6.	

Worksheet B-12: Assign the Call Coverage Path for Remote Switch — BX.25 Signaling (Control Link Integration, DCS Environment)

Date _____

Prepared By _____

Contact Telephone Number _____

The following information is required to define call coverage paths for remote subscribers in a DCS network. Complete a worksheet for each remote switch.

`Coverage Path Number` Enter the number you want to identify the call coverage path for subscribers.	
`Next Path Number` If desired, enter the second path to which calls will be directed in case the current path fails.	
Coverage Criteria `Station/Group Status Active`? (Inside Call/Outside Call)	**[n/n]**
Coverage Criteria `Busy`? (Inside Call/Outside Call)	**[y/y]**
Coverage Criteria `Don't Answer`? (Inside Call/Outside Call)	**[y/y]**
Coverage Criteria `All`? (Inside Call/Outside Call)	**[n/n]**
`SAC/Go to Cover?` (Inside Call/Outside Call)	**[y/y]**
`Number of rings` Enter the number of rings (1–99) you want before a call goes to coverage.	**[3]**
Coverage Points For `Point1`, `Point2`, or `Point3`, enter **h** followed by the DEFINITY AUDIX remote hunt group number.	

Worksheet B-13a: Processor Channel Assignment for a G3r Host ISDN Gateway (Control Link Integration, DCS Environment)

This worksheet applies for a G3r host in a DCS via ISDN-PRI environment only. If the DEFINITY AUDIX system is to be installed in a G3i, G3s, or G3vs switch, use Worksheet B-13.

Date _____

Prepared By _____

Contact Telephone Number _____

The information in the following table is required to assign the processor channel G3r switch.

`Processor channel number`	**[***1–128***]**
`Application`	[gateway]
`Interface Link Number` Enter the number of the Interface link from the host switch INTERFACE LINKS screen for the DEFINITY AUDIX link.	
`Interface Channel Number` Enter a number from 1 to 64 to identify the interface channel that connects the DEFINITY AUDIX system to the host switch.	
`Local Port` Enter the Switch Port number used on the DEFINITY AUDIX SWITCH-LINK DCIU-SCI screen.	
`Remote Port` Enter the value entered for the Interface Channel above.	
`Adjunct Name`	leave blank
`Machine-ID` This number must agree with the AUDIX field entry on the DEFINITY AUDIX SWITCH LINK DCIU-SCI screen.	

Worksheet B-14: ISDN Signaling Group for the Host (Control Link Integration, DCS Environment)

Date _____

Prepared By _____

Contact Telephone Number _____

The following information is required to define the ISDN signaling group for the host in a DCS/ISDN environment.

`Group Number` Enter the number of the signaling group associated with the DCS non-call associated temporary signaling connection (NCA-RSC) on the remote switch.	
`Associated Signaling`	[n]
`Primary D-channel` Enter the port number associated with the DS1 interface circuit-pack port.	
`Secondary D-channel` Enter the port number associated with the DS1 interface circuit-pack port used for secondary D-channel signaling.	
`Max Number of NCA RSC` Increment the current field entry by 1.	
`Max number of CA RSC` Enter the maximum number of simultaneous Call Associated Temporary Signaling Connections (CA-RSCs) that can exist in the Signaling Group.	
`Trunk Group for NCA RSC` ISDN-PRI trunk group number whose incoming call handling table will be used to handle incoming NCA-RSCs through the signaling group.	
`Trunk Brd` Enter a 5-character DSI Interface circuit pack number that has trunk members belonging to this Signaling Group.	**[3]**
`Interface ID` Enter an interface ID (0–31) for the corresponding DS1 Interface Circuit pack.	

`Service Feature` Service type for all administered NCA-RSCs assigned in the Signaling Group.	
`As-needed Inactivity Time-out (min)` Enter *10–90*.	
`RSC Index` Choose a free index. This index is also entered on Worksheet B-15.	
`Local Ext` An unassigned extension number.	
`Enabled`	[y]
`Establish`	[permanent]
`Dest. Digits` The digits needed to route the administered NCA-RSC to the far-end switch.	
`Application`	[gateway]
`Machine ID` Machine ID of the far-end switch to which this NCA-RSC is to be connected.	
`Adj Name` (G3r only) Enter the name of the DEFINITY AUDIX system entered on Worksheet B-5 to be used on the G3r USER DEFINED ADJUNCT NAMES screen.	

Worksheet B-14a: ISDN Signaling Group for a Remote Switch (Control Link Integration, DCS Environment)

Date _____

Prepared By _____

Contact Telephone Number _____

The following information is required to define the ISDN signaling group for a remote switch in a DCS/ISDN environment.

`Group Number` Enter the number of the signaling group associated with the DCS non-callassociated temporary signaling connection (NCA-RSC) on the remote switch.	
`Associated Signaling`	n
`Primary D-channel` Enter the port number associated with the DS1 interface circuit-pack port.	
`Secondary D-channel` Enter the port number associated with the DS1 interface circuit-pack port used for secondary D-channel signaling.	
`Max Number of NCA RSC` Increment the current field entry by 1.	
`Max number of CA RSC` Enter the maximum number of simultaneous Call Associated Temporary Signaling Connections (CA-RSCs) that can exist in the Signaling Group.	
`Trunk Group for NCA RSC` ISDN-PRI trunk group number whose incoming call handling table will be used to handle incoming NCA-RSCs through the signaling group.	
`Trunk Brd` Enter a 5-character DSI Interface circuit pack number that has trunk members belonging to this Signaling Group.	**[3]**
`Interface ID` Enter an interface ID (0–31) for the corresponding DS1 Interface Circuit pack.	

`Service Feature` Service type for all administered NCA-RSCs assigned in the Signaling Group.	
`As-needed Inactivity Time-out (min)` Enter *10–90*.	
`RSC Index` Choose a free index. This index is also entered on Worksheet B-15.	
`Local Ext` Enter the Dest. Digits entered on Worksheet B-11a.	
`Enabled`	[y]
`Establish`	[permanent]
`Dest. Digits` Enter the Local Ext entered on Worksheet B-11a.	
`Application`	[audix]
`Machine ID` Machine ID of the far-end switch to which this NCA-RSC is to be connected.	
`Adj Name` (G3r only) Enter the name of the DEFINITY AUDIX system entered on Worksheet B-5 to be used on the host G3r USER DEFINED ADJUNCT NAMES screen.	

Worksheet B-15: ISDN RSC Gateway Channel Assignment for the Host (Control Link Integration, DCS Environment)

Date _____

Prepared By _____

Contact Telephone Number _____

The following information is required for the channel assignment on a DCS/ISDN RSC gateway.

`Sig Group` Group number from Worksheet B-14a.	
`Enter Adm'd NCA RSC Index` Enter the RSC Index chosen on Worksheet B-14a.	
`Processor Channel` Enter the processor channel chosen on Worksheet B-13a.	
`Application`	[audix]

Worksheet B-16: Administer Digital Networking Ports (Digital Port Emulation)

For a complete set of Digital Networking worksheets, see *DEFINITY AUDIX System — Digital Networking*, 585-300-534.

Date _____

Prepared By _____

Contact Telephone Number _____

The following information is required to administer the digital networking port on a Data Module screen on the switch

Assign a data extension (Enter the data extension on the data module screen for voice port one)	
Enter a name for the data extension	
Enter a name that identifies the networking port	
Enter a class of restriction (COR) Enter a class of service (COS) (Use a separate COS with data privacy and no restrictions.)	

DCP Mode 2 Planning Worksheets

Complete the following worksheets for DCP Mode 2 connections.

Worksheet B-17: Administer a 7400A Data Module and ADU (Digital Port Emulation, Digital Networking)

Date _____

Prepared By _____

Contact Telephone Number _____

The information in the following tables is required to administer a 7400A data module and ADU

For each 7400A data module or ADU used in a DCP Mode 2 modem/data module arrangement, administer a DATA MODULE screen.

`Type`	Enter **pdm** for a 7400A data module, or enter **data-line** for an ADU
`Port`	Enter the port location of the TN754 port to which the data module connects or the TN726 port to which the ADU connects (such as **2B0701** module 2, carrier B. slot 07, port 01)
`Name`	Enter an identifying name for the data module or ADU, such as **dignet datmod 1**or **dignet ADU-1**.

Worksheet B-18: Administer a 7400A Data Module and/or ADU – DCP Mode 2

Date _____

Prepared By _____

Contact Telephone Number _____

For each 7400A data module or ADU used in a DCP Mode 2 modem/data module arrangement, administer a DATA EXTENSION screen. Complete a worksheet for each data module or ADU. The information in the following table is required to administer a 7400A data module or ADU.

`Type` Enter **pdm** for a 7400A data module, or enter **data-line** for an ADU.	
`Port` Enter the port location of the TN754 or TN2181 port to which the data module connects or the TN746 port to which the ADU connects (such as **2B0701**, which indicates module 2, carrier B. slot 07, port 01).	
`Name` Enter an identifying name for the data module or ADU (such as **dignet datmod1** or **dignet ADU-1**).	
`COS`	
`COR`	

If Type is pdm:
`Remote Loop-Around Test`
`Secondary Data Module`
	
	[n]
	[n]

`Connected to`	[dte]
`ITC` (G3V2 and above, ProLogix) Enter **restricted** or **unrestricted**	

The following additional information is required for each ADU

KYBD Dialing	[y]
Configuration	[n]
Busy Out	[y]
Low	[n]
Speed Enter **9600 bps** or **19200 bps**.	
Autoadjust	[n]
Permit Mismatch	[n]
Dial Echoing	[y]
Disconnect Sequence	[two-breaks]
Answer Text	[y]
Parity	[space]
Connected Indication	[y]

Worksheet B-19: Administer a Modem – Digital Networking

Date _____

Prepared By _____

Contact Telephone Number _____

For each modem used in a DCP Mode 2 modem/data module arrangement, administer a STATION screen on the switch. Complete a worksheet for each modem.

Type	2500
Port	
Name Enter a name that identifies the modem (such as **dignet modem1**).	
COS	
COR	
Tests	[y]
LWC Reception	[n]
LWC Activation	[n]
Coverage Msg Retrieval	[n]
CDR Privacy	[n]
Auto Answer	[none]
Redirect Notification	[n]
Data Restriction	[y]
Per Button Ring Control	[n]
Call Waiting Indication	[n]
Bridged Call Alerting	[n]
Att. Call Waiting Indication	[n]
Off Premises Station	[n]
Distinctive Audible Alert	[n]
Switchhook Flash	[n]
Message Waiting Indicator	leave blank
Adjunct Supervision	[n]

DEFINITY AUDIX System Administration Worksheets

C

Before a software associate or software specialist can perform initial administration for the DEFINITY AUDIX system, he or she needs to obtain certain information from the customer. A software associate or software specialist should have the customer complete the worksheets on the following pages before installation. The worksheets include information necessary for initial DEFINITY AUDIX system administration.

You need information from the customer before you can complete the following DEFINITY AUDIX administration tasks:

- Activate customer options
- Activate DEFINITY AUDIX server hardware (LAN) options
- Assign the DEFINITY AUDIX machine ID
- Assign switch link translations — Control link integration
- Set system parameters limits
- Assign the time zone
- Activate parameters and basic features
- Add subscribers
- Set up Alarm Origination
- Network (completed forms should be provided with the spec.)

For a complete description of these tasks and the information required to complete them, see Chapter 5.

Worksheet C-1: Activate Customer Options

Date _____

Prepared By _____

Contact Telephone Number _____

The information you supply here will be input on the SYSTEM-PARAMETERS CUSTOMER-OPTIONS screen during installation.

Field	Default	Desired
Port Emulation Type	TN746 (CL only), TN754, or TN2181[1]	TN2181
Maximum Number of Voice Ports	4	
AMIS Analog	n	
Digital Networking[2]	n	
Maximum number of digital networking ports	n	
Multilingual	n	
Maximum Number of IMAPI Sessions	0	
Hours of Voice Storage Purchased		

1. For switch releases G3V2 and higher or Prologix, TN2181 digital port board emulation is always preferable over TN754 emulation to accommodate system expansion.
2. For DCP Mode 2 Connections, traffic restrictions may apply.

Worksheet C-2: Activate IMAPI for the AUDIX Server Hardware (LAN) Options

Date _____

Prepared By _____

Contact Telephone Number _____

The information you supply here will be input on the SYSTEM-PARAMETERS IMAPI-OPTIONS screen during installation only if the customer purchased INTUITY Message Manager.

Field	Default	Desired
Maximum Number of Enabled IMAPI Sessions	32	
Enable Check_new messages	n	**y**
Enable Deliver_ca_message	n	**n**
Enable Voice File Transfer	n	**y**
IMAPI Session Timeout	5	
IMAPI IP Address[1]		
IMAPI Subnet Mask[1]		
Default Gateway IP Address[1]		

1. This number is supplied by the LAN manager or administrator. The address appear in the form *nnn.nnn.nnn.nnn*, where each *nnn* can be a number between 0 and 255.

INTUITY Message Manager requires the following:

— A 10BaseT connection to the LAN

— Transmission Control Protocol/Internet Protocol (TCP/IP) between the DEFINITY AUDIX server and the end-users' PCs.

— A 486-33MHz PC with 10 MB of free hard disk storage. The tutorial requires an additional 10 MB of disk storage, if installed.

— IMM software, and the standard WIN socket open network programming interface.

— The PC requires the following operating system:

Release	Operating System
4.1	Windows 3.1 or later
4.3	Windows for Workgroups 3.11 or later
4.5	Windows 95 or Windows NT

Prior to activating and installing the LAN options that will allow IMM to work, the LAN administrator must add the AUDIX host name to the network domain name server. This will allow machine name addressing to the AUDIX system.

Worksheet C-3: Assign the DEFINITY AUDIX Machine ID

Date _____

Prepared By _____

Contact Telephone Number _____

The information you supply here will be input on the MACHINE screen during cut-to-service administration.

Field	Default	Desired
Machine Name	local	
Machine Type	audix	**audix**
Location	local	**local**
Voiced Name	n	
Extension Length	4	
Voice ID	0	**0**
Default Community Messages without a community ID are assumed to have been sent from this community. See *DEFINITY AUDIX System — Feature Descriptions*, 585-300-206 for information on communities and the Sending Restrictions feature.		

Enter the address ranges for subscriber extensions for each machine in the table below. The prefix can be used to distinguish between machines that have overlapping extension ranges.

Machine	Prefix	Start Extension	End Extension
1			
2			
3			
4			
5			
6			
7			
8			
9			
10			

Worksheet C-4: Assign Switch Link Translations (Control Link Integration)

Date _____

Prepared By _____

Contact Telephone Number _____

The information you supply here will be input on the SWITCH LINK screen during initial administration.

Limit	Default	Desired
Switch number This is always **1** unless in a DCS environment.		
Logical Channel number This is the Physical Channel assigned on Worksheet B-7a or B-7b.		
Switch Port number This is the Processor Channel number assigned on Worksheet B-7a or B-7b.		
Data Link number		
Host Switch number		
AUDIX Machine number		

Worksheet C-5: Set System Parameters Limits

Date _____

Prepared By _____

Contact Telephone Number _____

The information you supply here will be input on the SYSTEM-PARAMETERS LIMITS screen during initial administration.

Limit	Default	Desired
Maximum Message Length (seconds)	1200	
Minimum Message Length (tenths of seconds)	10	
Total Messages in all Mailboxes The appropriate value depends on the disk size and the number of local subscribers. The recommended number is 10 times the number of subscribers.	50000	
Maximum Messages Awaiting Delivery The appropriate value depends on the disk size and the number of local subscribers. The recommended number is the number of subscribers.	5000	
Maximum Number of Local Subscribers[1] The appropriate value depends on the disk size. See *DEFINITY AUDIX System — System Description*, 585-300-214 for more information.	1000	
Maximum Number of Administered Remote Subscribers The appropriate value depends on the disk size. See *DEFINITY AUDIX System — System Description*, 585-300-214 for more information.	1000	
Total List Entries This is the total entries allowed in all subscriber's lists.	50000	
Total Number of Lists per Subscriber	100	
Maximum Total Number of Recipients per List	250	
Maximum Administration Log Entries	1000	

1. The maximum number of local subscribers should be 2000 or less.

Worksheet C-6: Assign the Time Zone

Date _____

Prepared By _____

Contact Telephone Number _____

The information you supply here will be input on the SWITCH TIME ZONE screen during initial administration.

In what time zone will your DEFINITY AUDIX system be installed (0–23)?	
Do you observe daylight savings time (y/n)?	

Valid United States time zones are as follows:

- Eastern — 5
- Central — 6
- Mountain — 7
- Pacific — 8
- Alaska — 9
- Hawaii — 10

Worksheet C-7: Activate Parameters and Basic Features

Date _____

Prepared By _____

Contact Telephone Number _____

The information you supply here will be input on the SYSTEM-PARAMETERS FEATURES screen during cut-to-service administration.

Field	Default	Desired
Log-in Parameters		
Maximum Login Retries	3	**3**
Consecutive Invalid Attempts	18	
System Guest Password	blank	
Minimum Password Length	0	

Field	Default	Desired
Lucent Technologies recommends changing this field to at least **5**.		
Password Aging Limits (days) Subscriber Mailboxes Password expiration interval (**0** for no password aging)	0	0–999
Minimum age before changes	0	0–99
Expiration warning (**0** for no warning)	0	0–99
Password Aging Limits (days) Administrator login Password expiration interval (**0** for no password aging)	0	
Minimum age before changes	0	
Expiration warning (**0** for no warning)	0	
Input Time Limits (seconds) Normal	60	
Full Mailbox Timeout (seconds)	5	
Wait (*W)	180	
Between digits at auto-attendant or stand alone menu (3-12)	3	
Disconnect Options Quick Silence Disconnect?	n	
Silence Limit? (5–30 seconds)	30	
Tone Based Disconnect?	n	
Miscellaneous Parameters Broadcast Mailbox Extension	99999	
System Prime Time, Start	8:00	
System Prime Time, End	17:00	
Weekly Backup Enabled?	y	
Locals Only?	n	
Increment (l/s), Rewind?	s	
Increment (l/s), Advance?	s	
Feature Activation Traffic Collection	n	
Name Record by Subscriber?	y	
Multiple Personal Greetings?	y	
End of Message Warning?	y	
Warning Time (seconds)	15	

Field	Default	Desired
Priority on Call Answer?	n	
Call Transfer Out of AUDIX		
Transfer Type? (basic/enhanced[1]/none)	none	
Transfer Restriction (subscribers/digits)	subscribers	
Covering Extension	blank	
Announcement Sets		
System	standard	
Administrative	blank	

1. This feature is only available with control link integration.

Rescheduling Increments For Unsuccessful Message Delivery[1]

Increment	Days	Hours	Minutes
1			
2			
3			
4			
5			
6			
7			
8			
9			
10			

1. For information on default values, see *DEFINITY AUDIX System Release 4.0 — Screens Reference*, 585-300-211.

Worksheet C-8: Add Subscribers

Date _____

Prepared By _____

Contact Telephone Number _____

The information you supply here will be input on the SUBSCRIBER and COS screens during cut-to-service administration. Complete the following information for each subscriber to be added to the DEFINITY AUDIX database during cut-to-service administration. The minimum information needed to add a subscriber to the DEFINITY AUDIX database is a name and an extension for the subscriber. The DEFINITY AUDIX system will supply defaults for all the remaining fields on the SUBSCRIBER screen.

You must administer the following information for each subscriber to be added to the DEFINITY AUDIX system database:

- Subscriber name
- Subscriber extension
- Initial password
- Class of Service (COS) — 12 classes of service can be defined for the DEFINITY AUDIX system; see *DEFINITY AUDIX System — Administration,* 585-300-507 and *DEFINITY AUDIX System -- System Description*, 585-300-214 for more information on COS. Values for the default COS, found on the Change Subscriber screen (page 2) and the Change COS screen, appear on the next page.
- Miscellaneous
- Switch ID —The number identifying the switch on which the subscriber is administered. (The default value represents the local switch.) Enter ø if there is no station on the switch. In this case, no lamp updates will be performed.
- Covering extension
- Community ID — The number identifying the community of subscribers to which this subscriber will belong; community ID can be used to administer, for example, message sending restrictions.
- Broadcast Mailbox

Options	Default Values for COS 0
Addressing Format	extension
System Multilingual is ON	
Login Announcement Set	(specific)
Call Answer Language Choice?	y
Call Answer Primary Annc. Set	(specific)
Call Answer Secondary Annc. Set	(specific)
PERMISSIONS	
Type	call-answer
Announcement Control	n
Outcalling	n
Priority Message	n
Broadcast	none
IMAPI Access	n
IMAPI Voice File Access	n
INCOMING MAILBOX	
Order	fifo
Category Order	nuo
New Message Retention Time	10
Old Message Retention Time	10
Unopened Message Retention Time	10
OUTGOING MAILBOX	
Order	fifo
Category Order	ufdan
File Cabinet Retention Time	10
Delivered/Nondeliverable Retention Time	10
Voice Mail Message (seconds)	
Maximum Length	300 sec.
Minimum Needed	32 sec.
Call Answer Message (Seconds)	
Maximum Length	120 sec.
Minimum Needed	8 sec.
End of Message Warning Time (seconds)	15
Maximum Mailing Lists	25
Total Entries in All Lists	250

Options	Default Values for COS 0
Mailbox Size (seconds)	
Maximum	1200 sec.
Minimum Guarantee	0 sec.

You can make copies of this page to use in collecting the information needed for each subscriber.

Name (last, first)	Extension	Initial Password	COS	Misc.	Switch ID	Covering Extension	Comm. ID	Broadcast Mailbox?

Worksheet C-9: Set Up Alarm Origination

Date _____

Prepared By _____

Contact Telephone Number _____

The project manager or the technician will input the information from this worksheet on the SYSTEM-PARAMETERS MAINTENANCE screen in installation Task 10-1 in Chapter 10. In Task 10-1 you will call the TSC and have them add the customer to the database and test the Alarm Origination feature.

What is the name[1] of the DEFINITY AUDIX system? (Lucent Technologies identifier)	
What is the DEFINITY AUDIX system location?	
What is the telephone number the customer can call to report problems with the DEFINITY AUDIX system or to ask for help? In the United States this number is 1-800-242-2121.	
What is the automatic alarm reporting telephone number? This is the modem command string for automatic alarm referral calls generated by the DEFINITY AUDIX system. The INADS administrator will give this string to the installer.	
Will Alarm Origination be activated through the DEFINITY AUDIX system only (enter **audix only**), through the switch only (enter **switch only**), or both (enter **audix & switch**).	
What is the telephone number for the remote maintenance port?	
What is the modem initialization string (if the modem is not a US Robotics Sportster)	

1. This is a unique name the TSC uses to access the system. The TSC can help in assigning this name. Once the name is assigned, only the TSC can change it. This name is not used by any other Lucent Technologies group or by the customer.

Optional Features Worksheets

D

The following worksheets are designed to help customers plan for any optional switch or DEFINITY AUDIX features they want to implement. Optional features include:

- AMIS Analog Networking and/or Message Delivery
- Automated Attendant
- Bulletin Board
- Outcalling
- Switch Recorded Announcement
- Digital networking port activation

NOTE:
To administer Digital Networking, see *DEFINITY AUDIX System — Digital Networking*, 585-300-534, for a complete set of worksheets.

You may administer these features on your own, or you may pay Lucent Technologies to administer them for you.

Worksheet D-1: Administering AMIS Analog Networking and Message Delivery

Date _____

Prepared By _____

Contact Telephone Number _____

To administer the AMIS Analog Networking and/or the Message Delivery you need to complete the following tables. See *AMIS Analog Networking,* 585-300-512, for more information.

You need the information in the following table to complete the SYSTEM-PARAMETERS ANALOG-NETWORK screen.

Country Code Enter the country code of the hunt group of the analog voice ports for the local DEFINITY AUDIX system.	
Area/Trunk Number Enter the area/trunk code of the hunt group of the analog voice ports for the local DEFINITY AUDIX system.	
Local Number Enter the local telephone number of the hunt group of the analog voice ports for the local DEFINITY AUDIX system.	
AMIS Analog Networking Incoming Allowed? (y/n)	
AMIS Analog Networking Outgoing Allowed? (y/n)	
AMIS Prefix This field is optional.The AMIS prefix simply identifies an address to the system as an AMIS Analog or Digital address.	
AMIS Protocol—Use 8 Minutes For Incoming Message Length 0? (y/n) If yes, the DEFINITY AUDIX system will assume messages of unknown length are actually eight minutes long.	
AMIS Loopback Test Mailbox Extension	

You will need the information in the following form to complete the SYSTEM-PARAMETERS OUTCALLING screen.

	Start Time	End Time	Interval	Max Simultaneous Ports [1]
1				
2				
3				

1. The maximum simultaneous ports includes ports for Outcalling, AMIS Analog Networking, and Message Delivery.

You need the information in the following table to complete the SYSTEM-PARAMETERS FEATURES screen.

Rescheduling Increments For Unsuccessful Message Delivery [1]

Increment	Days	Hours	Minutes
1			
2			
3			
4			
5			
6			
7			
8			
9			
10			

1. For information on default values, see *DEFINITY AUDIX System Release 4.0 — Screens Reference*, 585-300-212.

You need the information in the following tables to complete the MACHINE screen. Complete these tables for each remote machine to be administered on the local system.

Machine Name	
Machine Type (Valid entries are amisac, amisap, calld)	
Location	displa y
Voiced Name?	displa y
Extension Length	
Voice ID	displa y
Default Community	

Prefix	Start Extension	End Extension

Dial String: _____

Message Transmission Start Time	Message Transmission End Time

Worksheet D-2: Automated Attendant

Date _____

Prepared By _____

Contact Telephone Number _____

You need the following information to assign a hunt group on the switch for an automated attendant. See "Automated Attendant Administration" in Chapter 6 for more information.

What extension do you want to assign to the attendant?	
What station type will you use? (Each automated attendant will use a station port unless you assign a hunt group.)	
What number do you want to use to identify the hunt group for the automated attendant?	

You will need the information in the following table to complete the SUBSCRIBER screen for each Automated Attendant. See *DEFINITY AUDIX System — Administration*, 585-300-507 for automated attendant examples and other information.

Do you want Night Service to the Automated Attendant?	
If yes, do you want it from an incoming trunk or from a Listed Directory Number (LDN)	
Do you want Automated Attendant operation based on business schedules?	
Do you want Automated Attendant operation based on the holiday schedule?	
What would you like to name the automated attendant (for the system directory)?	
Do you want to allow the caller to transfer out of the attendant using [*] [T] ? (The Transfer Out of AUDIX feature must be enabled.)	

How many seconds do you want the system to wait for a response from the caller before timing out?	
Do you want to verify if the definition of an Automated Attendant menu tree is complete?	
Do you want to verify the operation of various Automated Attendant menu trees in operation at a customer site?	

For each telephone button (0–9) that is *not* the same as the first digit of the switch extensions (assuming this attendant is set up to go to a given extension), list the transfer extension. To go to an extension that begins with the same digit as the button, enter **e**. For each extension, indicate whether the caller should be transferred normally (T), should hear the subscriber's call answer (CA), or should hear the system guest greeting (G). Also for each extension, include a descriptive comment.

Button	Extension or e	Transfer Normally (T) Call Answer (CA) Guest Greeting (G)	Comment
1			
2			
3			
4			
5			
6			
7			
8			
9			
0 timeout			

What would you like the attendant to say initially? (For example: *Thank you for calling Primary Propulsion Systems. Press 1 for Personnel, 2 for Accounting.*

Record the attendant menu just as you would a personal greeting, using the automated attendant extension to log in. You can get a list of all your attendants by using the LIST ATTENDANTS screen.

Worksheet D-3: Administering a Bulletin Board

Date _____

Prepared By _____

Contact Telephone Number _____

You will need the information in the following table to complete the SUBSCRIBER screen for each bulletin board. You can also set up a class of service for bulletin boards using the COS form, and identify that class of service on the SUBSCRIBER form. See *DEFINITY AUDIX System — Administration*, 585-300-507 or *DEFINITY AUDIX System — R3.1 Screens Reference*, 585-300-211 for more information.

To what extension do you want the bulletin board assigned?	
What do you want to name the bulletin board (for the system directory)?	

If you have not set up a class of service for bulletin boards (using the COS screen), you must set the PERMISSIONS field to bulletin board.

What do you want the bulletin board to say initially?

_____

_____

_____

_____

_____

_____

_____

_____

_____

Worksheet D-4: Administering Outcalling

Date _____

Prepared By _____

Contact Telephone Number _____

The information you supply here will be input on the SYSTEM-PARAMETERS OUTCALLING screen during cut-to-service administration.

	Start Time	End Time	Interval	Max Simultaneous Ports[1]
1				
2				
3				

1. The maximum simultaneous ports includes ports for Outcalling, AMIS Analog Networking, and Message Delivery.

Initial Delay (minutes) This is the number of minutes that must elapse after a message is delivered before the first outcalling attempt is made.	
Maximum Number Digits The maximum length telephone number subscribers can specify for Outcalling. If subscribers are going to have outcalls placed to pagers, set this to **29**.	

Worksheet D-5: Administering Switch Recorded Announcement

Date _____

Prepared By _____

Contact Telephone Number _____

To administer a Switch Recorded Announcement you need to complete the following table. See "Switch Recorded Announcement" in Chapter 6 for more information.

To what extension do you want the switch announcement assigned?	
Will an Lucent Technologies TN750 Announcement circuit pack or a customer-provided external system be used?	
What COR do you want to assign this extension?	
What do you want to name the switch recorded announcement?	
How long do you want the queue to be?	

What message do you want callers to hear if all DEFINITY AUDIX ports are busy?

_____

_____

_____

_____

_____

_____

_____

For information on activating the digital networking port, see *DEFINITY AUDIX System — Digital Networking,* 585-300-534.

Terminal Configuration

E

For a DEFINITY AUDIX system, at least one system-access terminal is required for administration and local maintenance. This terminal should be connected to port A of the DEFINITY AUDIX system. A second, optional terminal can be connected to port B if the system is operating in display set mode. The required terminal can be connected to the DEFINITY AUDIX system in one of the following ways:

- Direct connection
- Via modems or data modules
- Via asynchronous data units (ADUs)

Two RS-232 cables are included with every DEFINITY AUDIX system to connect the terminals. Normally, these cables have a length of 20 feet. However, the cables can be ordered in lengths of up to 50 feet.

Worksheet E-1: Terminals

Date _____

Prepared By _____

Contact Telephone Number _____

To the AE:

Complete this worksheet with the customer before configuring and ordering the DEFINITY AUDIX system. For more information about supported terminals and

other peripherals, see *DEFINITY AUDIX System — System Description*, 585-300-214.

Options	Terminal 1	Terminal 2 (DP mode only)
What type of terminal do you want to use? The customer can use a 715 with the DEFINITY AUDIX system. The 715 will emulate any other Lucent Technologies administration terminal, such as a 513 or a 615. The customer can also use a PC with an emulation package, such as G3-MA or DNA. For information about required emulation packages, see *DEFINITY AUDIX System — System Description*, 585-300-214.		
How do you want the administration terminal connected to the DEFINITY AUDIX system? You can implement any of the following: ■ Directly via cables ■ Via modems ■ Via data modules Options: one 7400A and one 7400B, ■ Via asynchronous data units (ADU)		
If connecting via a modem or 7400 data module, what is the phone number of the connection?		
Do you want to order a parallel printer for the terminal? Options are the 470 series printer, 570 series printer, or 580 series printer.		
What length cables would you like for the terminals? The default is 20 feet. Options are 5, 10, 30, 40, or 50		

Migration Procedure

F

A customer with DEFINITY® AUDIX® 3.2 or earlier can migrate to DEFINITY AUDIX version 4.0 from either Control Link (CL) integration or Display Set (DS) integration. In either case, DEFINITY AUDIX 4.0 connects to the existing hardware via a new system adaptor cable, and in most cases, only minor changes need to be administered to the switch and the DEFINITY AUDIX system.

DEFINITY AUDIX 4.0 supports a maximum of 12 voice ports with no networking port, or 8 voice ports with 1 networking port. If the existing system includes any of the following configurations, the system must either be upgraded to an Intuity Audix or modified to eliminate excess voice ports and networking ports:

- 2 networking ports
- 1 networking port with more than 8 voice ports
- No networking ports and more than 12 voice ports

When you migrate data from the existing system, however, you must administer changes to the DEFINITY AUDIX voice group and to the voice ports on the switch.

This migration procedure requires that the TN568 circuit pack of the DEFINITY AUDIX 4.0 system be installed in the same slot that was occupied by the previous DEFINITY AUDIX system. If DEFINITY AUDIX 4.0 is installed in a different slot, contact the remote service center.

CAUTION:
Migrating DEFINITY AUDIX data from an existing system to a new system overwrites any existing data on the new system, including any data previously migrated.

Materials and Information Needed

You need the following items to complete the migration from a previous version of DEFINITY AUDIX system to version 4.0:

- Migration Checklist
- DEFINITY AUDIX installation hardware
- External Tandberg tape drive unit (shipped from the remote service center)
- Short SCSI cable
- Long SCSI cable
- One blank Tandberg 525 Mb tape for DEFINITY AUDIX data backups (shipped from the Remote Maintenance Center)
  - for nightly and weekly back-up data
  - for voice back-up data
  - for announcement sets

In addition to this document, you will need the following books:

- The Lucent™ DEFINITY AUDIX R4.0 Maintenance book
- The Lucent DEFINITY AUDIX R4.0 Administration book
- The installation book for the customer's switch

Migration Checklist

The table below shows the migration tasks and the sequence in which they occur.

Table F-1. Migration Checklist

Task	Description	Page	✔
1.	Shut Down the DEFINITY AUDIX System	page F-3	
2.	Export the Switch Voice Ports	page F-4	
3.	Connect the External Tandberg Tape Drive	page F-6	
4.	Back-Up the DEFINITY AUDIX Data	page F-7	
5.	Remove the Existing DEFINITY AUDIX System	page F-12	
6.	Install DEFINITY AUDIX 4.0	page F-13	
7.	Restore the Existing Data	page F-17	
8.	Remove the Tape Drive	page F-20	
9.	Verify the DEFINITY AUDIX Administration	page F-20	
10.	Administer Changes to the Switch	page F-23	
11.	Complete Additional Migration Tasks	page F-29	

Task F-1: Shut Down the DEFINITY AUDIX System

Shut down the DEFINITY AUDIX system before you export the voice ports on the switch.

1. On the back of the switch, disconnect the amphenol connector of the alarm origination cable from the back plane.

   The alarm cable connects to the middle slot on the DEFINITY AUDIX system. This action prevents the system from sending spurious alarms during the course of the upgrade

2. At the DEFINITY AUDIX administration terminal, log on to the DEFINITY AUDIX system using the craft login.

   The system displays a blank DEFINITY AUDIX Administration screen.

3. Enter **reset system shutdown** to shut down the DEFINITY AUDIX system.

4. Verify that the DEFINITY AUDIX system is shut down.

5. Continue with Task F-2.

Task F-2: Export the Switch Voice Ports

You must turn off the switch voice ports before you back up DEFINITY AUDIX data. Otherwise, DEFINITY AUDIX data does not migrate properly.

To turn off the voice ports at the switch:

1. At the switch administration terminal, enter **change station *extension*** for the first voice port in the DEFINITY AUDIX hunt group.

   The switch displays the Station screen.

```
change station 12007                                          Page 1 of 4

                                        STATION
        Extension: 12007            BCC: 0
             Type: 7405D            Lock Messages: n                COR: 1
             Port: 1A0507           Security Code: _                COS: 1
             Name: AUDIX TRANSFER   Coverage Path: 20

       FEATURE OPTIONS
          LWC Reception? msa-spe                Coverage Msg Retrieval? y
         LWC Activation? y                                 Auto Answer? n
           SMDR Privacy? ____                            Data Restriction? n
  Redirect Notification? n                  Idle Appearance Preference? n
  Bridged Call Alerting? n
                                              Restrict Last Appearance? n

             Data Module? n

         Display Module? y                              Coverage Module? n
```

Figure F-1. Change Station Screen

2. Enter **x** in the Port field, and press [ENTER].

   The cursor returns to the command line.

3. Repeat Steps 1 and 2 for each voice port.

4. Continue with Task F-3.

Task F-3: Remove the Voice Ports from the Hunt Group

To remove the ports from the Hunt Group:

1. At the switch administration terminal, enter **change hunt-group *number***

   where *number* is the number of the hunt group for the DEFINITY AUDIX system.

   The switch displays the Hunt Group screen.

2. Press [NEXTPAGE] until the switch displays the Group Member Assignments screen.

```
                                                          Page 2 of 6
                                HUNT GROUP
Group Number: 10      Group Extension: 12000      Group Type: ucd

Group Member Assignments

   Ext     Name                  Ext        Name              Ext        Name
1: 12001 AUDIX 1                   14: ____                     27: ____
2: 12002 AUDIX 2                   15: ____                     28: ____
3: 12003 AUDIX 3                   16: ____                     29: ____
4: 12004 AUDIX 4                   17: ____                     30: ____
5: 12005 AUDIX 5                   18: ____                     31: ____
6: 12006 AUDIX 6                   19: ____                     32: ____
7: 12007 AUDIX 6                   20: ____                     33: ____
8: 12008 AUDIX 8                   21: ____                     34: ____
9: 12009 AUDIX 9                   22:  ___                     35: ____
10:12010 AUDIX 10                  23:  ___                     36: ____
11:12011 AUDIX TRANSFER            24:  ___                     37: ____
12:12012 AUDIX 12                  25: __ _                     38: ____
13: ____                           26: _ __                     39: ____
                                                                40: ____
```

Figure F-2. Example of the Hunt Group Group Member Assignments Screen, (G3i/G3s/G3vs)

3. Remove the all of the ports from the Group Member Assignments screen.
4. Press [ENTER] to save the changes to the hunt group.
5. Continue with Task F-4.

Task F-4: Connect the External Tandberg Tape Drive

An external tape drive must be connected to the existing DEFINITY AUDIX system to record the system data. The tape drive will then be connected to DEFINITY AUDIX 4.0 and the data transferred to the new system.

To connect the external tape drive:

1. Remove the DEFINITY AUDIX system from the host switch.
2. Remove the SCSI cable and clips (Figure F-4) that connect the DEFINITY AUDIX tape drive to the Alarm Board (TN2169 or TN2170) and remove the tape drive from the Alarm Board. For details on removing the tape drive, see the Maintenance manual.

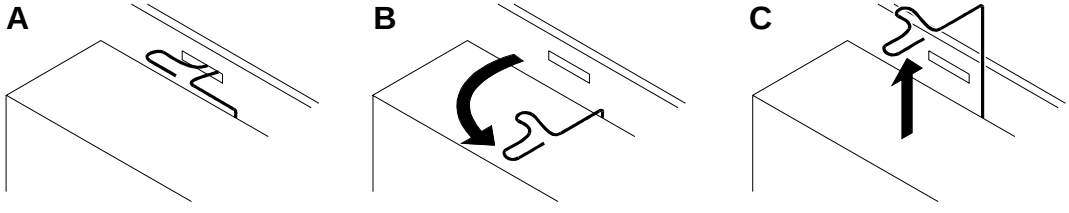

Figure F-3. Remove the Retaining Clips from the Tape Drive

3. Locate the short, flat SCSI cable from the migration kit. Route the cable into the front of the circuit pack, through the opening left by the removed tape drive. Position the cable with the red edge down. Attach the cable to the tape drive connector on the Alarm Board.
4. Connect one end of the long cable (found in the migration kit) to the external tape drive (also found in the migration kit). Connect the other end of the long cable to the short SCSI cable you connected to the Alarm Board.
5. Apply AC power to the external tape drive and turn it on. Insert a new tape (525Mb or 2Gb) into the drive. (Make sure the tape is not write-protected.)
6. Insert the DEFINITY AUDIX system back into the switch and allow the system to boot up.
7. Continue with Task F-5.

Task F-5: Back-Up the DEFINITY AUDIX Data

The tape capacity required to back up the system depends on the hours of voice messages stored on the system. A 2 Gb tape can hold the maximum hours of voice messages stored on the system, but a 525 Mb tape can only hold about 60 hours of voice messages. If you are using a 525 Mb tape and the system has more than 60 hours of voice messages stored on the hard drive, you must delete the excess storage before you back up the data.

1. At the DEFINITY AUDIX administration terminal, log on to the DEFINITY AUDIX system using the craft login and password.

   The system displays a blank DEFINITY AUDIX Administration screen:

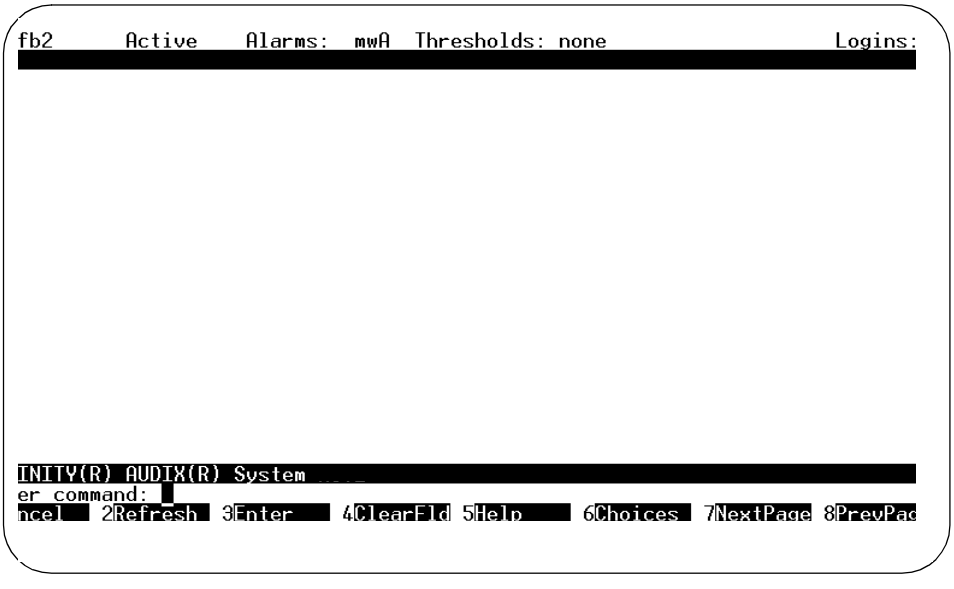

Figure F-4. DEFINITY AUDIX Administration Screen

2. Enter **reset system oa&m**

   The system displays the Reset System OA&M screen:

```
denvercl    Active    Alarms:    A  Thresholds: none                Logins: 1
reset system oa&m                                                  Page 1 of 1
                          RESET SYSTEM OA&M

WARNING - Pressing [Enter] now causes the system to be reset to the OA&M state.
          The reset cannot be cancelled after [Enter] has been pressed.

          The reset will be performed in a camp-on manner.

          Press [Cancel] to avoid doing the reset.

enter command: reset system oa&m
1Cancel  2Refresh 3Enter   4ClearFld 5Help   6Choices 7NextPage 8PrevPage
```

Figure F-5. Reset System OA&M Screen

3. Press F3 (Enter).

   The system stops all calls and the cursor returns to the DEFINITY AUDIX login prompt.

4. Login as craft.

5. Enter **add tape**

6. Enter a new name in the `Volume Name` field and press F3 (Enter).

7. Press F3 (Enter) again to confirm.

   CAUTION:
   All contents of the tape are erased during this process.

   The system saves the new name and the cursor returns to the command line. This process can take up to 20 minutes.

   NOTE:
   The back-up of DEFINITY AUDIX data takes between 30 minutes to several hours, depending on the size of the files. As a rule-of-thumb, the backup takes approximately 1 minute per megabyte of data.

8. Type **save nightly** and press ENTER.

   The system displays the Save Nightly screen:

```
denvercl    Active    Alarms:    A  Thresholds: none                Logins: 1
save nightly                                                       Page 1 of 1
                              SAVE NIGHTLY

    Status of most recent "save nightly" backup: completed



Press [ENTER] to execute or press [CANCEL] to abort
enter command: save nightly
1Cancel  2Refresh  3Enter   4ClearFld 5Help    6Choices  7NextPage 8PrevPage
```

Figure F-6. Save Nightly Screen

9. Press F3 (Enter) to run the nightly backup.

   The back-up begins and the cursor returns to the command line.

   NOTE:
   Check the status periodically using the **status tape** command. You can also use the **display admin** command to clear the adm “A” on the status line.

10. When the nightly back-up is complete (the elapsed time depends on the size of the system), enter **save weekly**

The system displays the Save Weekly screen:

```
denvercl    Active    Alarms:    A  Thresholds: none                Logins: 1
save weekly                                                        Page 1 of 1
                                SAVE WEEKLY

     Status of most recent "save weekly" backup: completed

Press [ENTER] to execute or press [CANCEL] to abort
enter command: save weekly
1Cancel  2Refresh  3Enter   4ClearFld 5Help   6Choices  7NextPage 8PrevPage
```

Figure F-7. Save Weekly Screen

11. Press F3 (Enter) to run the weekly back-up.

    The backup begins and the cursor returns to the command line.

    NOTE:
    Check the status periodically using the **status tape** command or the **display admin** command.

12. When the weekly back-up is complete (the elapsed time depends on the size of the system), determine the next step:
    - If the system includes customized announcements, continue with Step 13.
    - If the system does not include customized announcements, continue with Step 15.
13. Enter **save announcements**

The system displays the Save Announcements screen:

```
status audit
save announcements                                                    Page 1 of 1
                                 SAVE ANNOUNCEMENTS


          Status of most recent "save announcements" backup: not run


Press [ENTER] to execute or press [CANCEL] to abort
enter command: save announcements
```

Figure F-8. Save Announcements Screen

14. Press F3 (Enter) to run the announcement back-up.

    The backup begins and the cursor returns to the command line.

    NOTE:
    Check the status periodically using the **status tape** command or the **display admin** command.

15. When the announcement back-up is complete (the elapsed time depends on the size of the system), enter **save voice**

    The system displays the Save Voice screen:

```
remove tape
save voice                                                    Page 1 of 1
                                   SAVE VOICE

            Status of most recent "save voice" backup: not run

Press [ENTER] to execute or press [CANCEL] to abort
enter command: save voice
```

Figure F-9. Save Voice Screen

16. Press F3 (Enter) to run the voice back-up.

    The back-up begins and the cursor returns to the command line.

    NOTE:
    Check the status periodically using the **status tape** command or the **display admin** command.

17. When the voice backup is complete (this can take a few minutes to several hours depending on the amount of voice data), continue with Task F-6.

Task F-6: Remove the Existing DEFINITY AUDIX System

1. Enter **reset system shutdown** to shut down the existing DEFINITY AUDIX system.
2. Note which slots the DEFINITY AUDIX alarm board (third system slot) and multi-function board (fourth system slot) occupy in the switch.
3. Verify that the DEFINITY AUDIX is shut down, then remove it from the switch carrier.
4. Disconnect the short SCSI cable from the DEFINITY AUDIX MFB.
5. On the back of the switch, label each of the cables that connects to the the alarm cable and the MFB cable on the DEFINITY AUDIX system.

6. Disconnect the terminal, control link, LAN, alarm, and phone line cables from both the alarm cable and the MFB cable.
7. Remove the existing alarm cable and MFB cable.
8. Continue with Task F-7.

Task F-7: Install DEFINITY AUDIX 4.0

1. Install the new system adaptor cable on the back of the switch.

   NOTE:
   The new system has only adaptor cable that connects to the switch.

   Attach the male D-type amphenol connector on the new system adapter cable to the slot previously occupied by the old DEFINITY AUDIX multifunction board.

   CAUTION:
   You must connect the adapter cable directly to the port connector on the switch. If you install another cable between the switch and the cables, the DEFINITY AUDIX system will not operate correctly.

2. Reconnect all the peripheral hardware cables to the system adaptor cable. See Table F-2 for the correct configuration.

Table F-2. System Adaptor Cable Connections

System Cable connector	Hardware connection
Port A (Female RS-232)	Administration terminal
Port B (Female RS-232)	Control link or optional terminal
Port C (Female RS-232)	External modem
Female RJ45	LAN
Amphenol	Alarm connection

3. Install the external modem for remote maintenance and alarms. See Task 2-2 in Chapter 2 for instructions to connect it to the DEFINITY AUDIX system. This modem replaces the internal modem used by previous versions of DEFINITY AUDIX.
4. Unpack the DEFINITY AUDIX 4.0 system.

CAUTION:
Be careful when handling the new system. The power cable to the MO-drive is fragile and can easily break.

5. Disconnect the SCSI cable (H600-501 in Figure F-10) from the SCSI bus connector on the TN568 circuit pack and from the MO-disk drive.

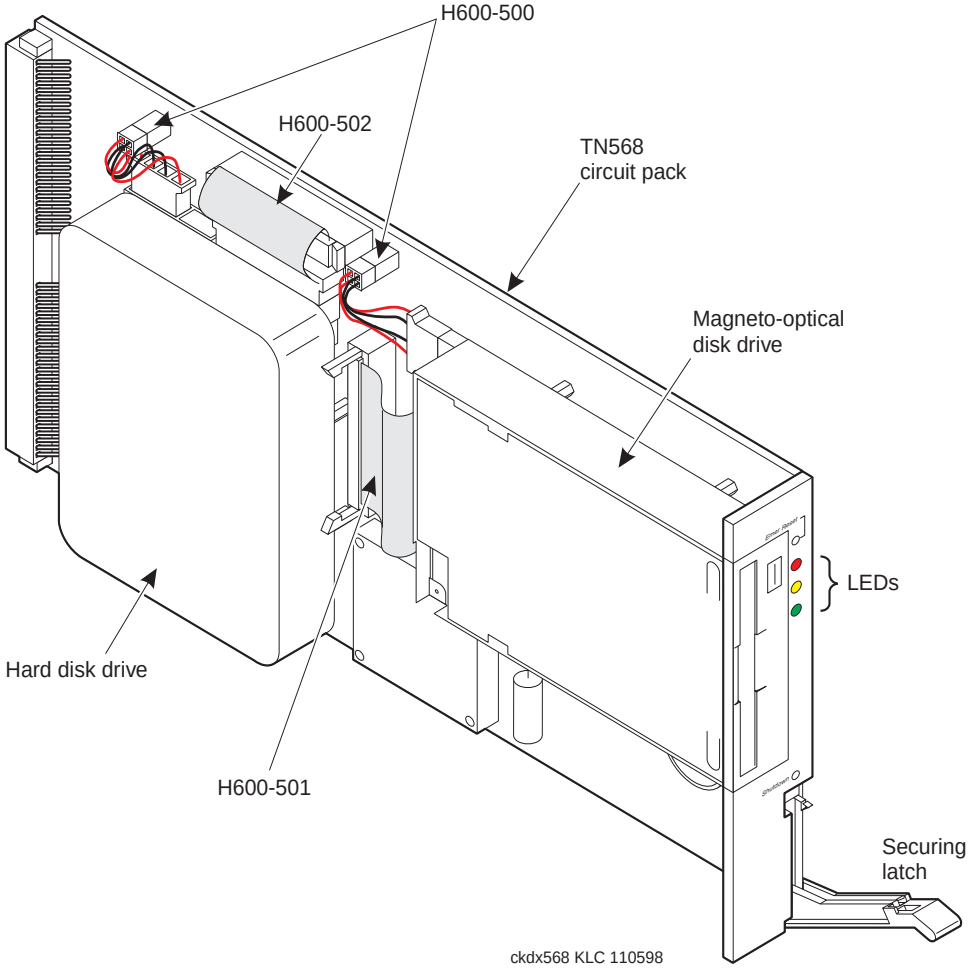

Figure F-10. DEFINITY AUDIX System Assembly

6. Attach the SCSI cable from the Tandberg tape drive to the DEFINITY AUDIX system (Figure F-11).

a. Firmly seat the SCSI cable from the external tape drive, red edge up, into the SCSI bus connector on the TN568 circuit pack. To seat the cable, you must lift the retaining clips on the SCSI bus connector away from the TN568 circuit pack.

CAUTION:
You must press the SCSI cable firmly into the connector. The external tape drive will not function if this cable is improperly seated.

b. Route the cable along the left side of the circuit pack.

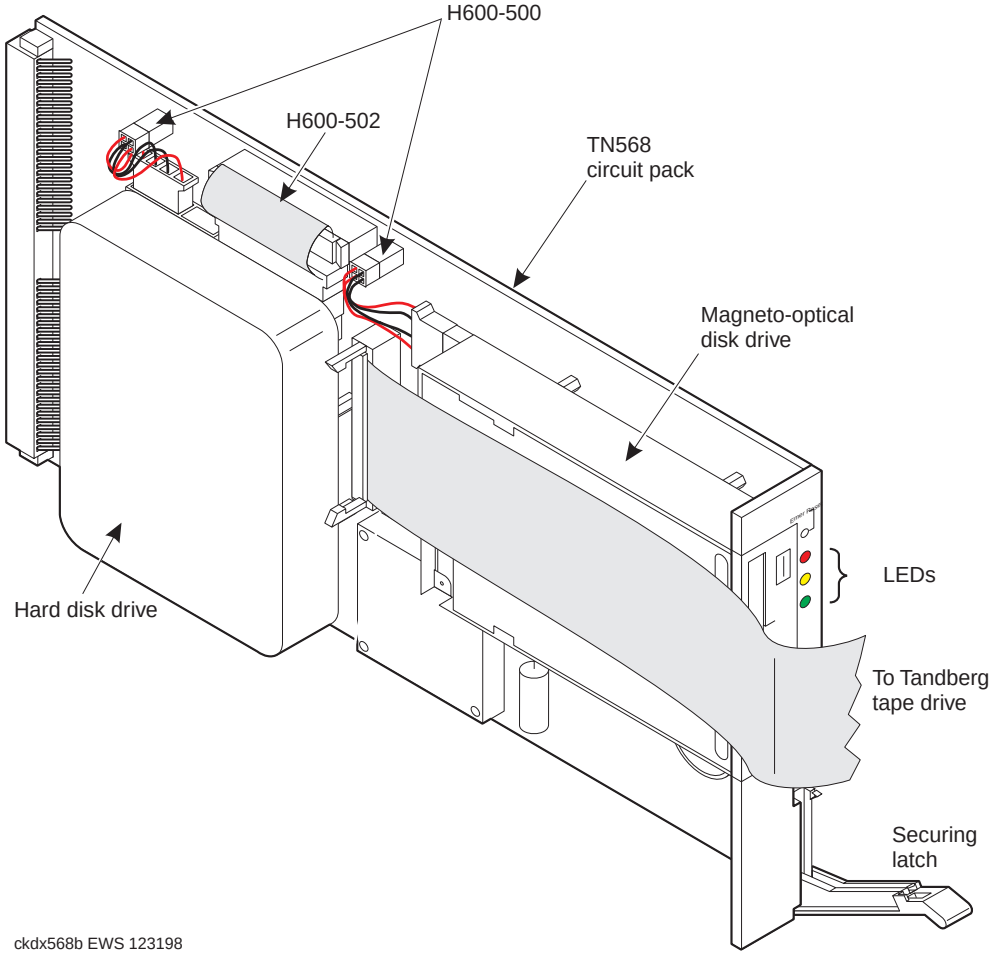

Figure F-11. DEFINITY AUDIX System with SCSI Cable Attached to External Tape Drive

7. Insert the DEFINITY AUDIX system into the switch cabinet.

   a. At the front of the switch carrier, locate the slot formerly occupied by the multi-function board of the previous DEFINITY AUDIX system.

   b. Hold the DEFINITY AUDIX system assembly by the outside edge of the faceplate and press the long SCSI cable against the left side of the DEFINITY AUDIX system.

   c. Line up the TN568 circuit pack with the bottom guide of the slot you located in Step a.

   d. With the assembly properly aligned in the slot, insert it with a single firm push, and lock it in place by pushing up the securing latch on the faceplate.

   WARNING:
   If the switch is powered on, the DEFINITY AUDIX system automatically boots up when seated in the slot. Damage to the hard disk could occur if the assembly is removed while booting. Therefore, do not adjust or reinsert the assembly.

8. As the DEFINITY AUDIX system boots up, watch the three LEDs on the faceplate.

   If the DEFINITY AUDIX system does not come up to the AUDIX state (Red-off, Green-off, yellow-on) within 10 minutes, write down the states displayed on the LEDs, and refer to the associated troubleshooting procedures in *DEFINITY AUDIX System — Maintenance*, 585-300-121.

   NOTE:
   If the system passes through the AUDIX state but ends with the following state:

   Green - off, Yellow - on, Red - on (or flashing),

   you can ignore it at this time. This state indicates a software error that probably resulted from a port board alarm. The alarm should turn off when you administer the ports and activate the optional features.

9. Once DEFINITY AUDIX 4.0 boots up successfully, administer the external modem and check that it is functioning properly. See "Modem Option Settings (for Port C Modems)" in Appendix H for instructions.

10. Continue with Task F-8.

Task F-8: Restore the Existing Data

Once the system is running, you must restore the data you backed up in Task F-5.

To restore the data:

1. At the DEFINITY AUDIX administration terminal, log in as *craft.*
2. With the cursor on the DEFINITY AUDIX command line, enter **reset system oa&m**

   The system displays the Reset System OA&M screen.

```
display system-parameters customer-options
reset system oa&m                                                    Page 1 of 1
                                RESET SYSTEM OA&M


WARNING - Pressing [Enter] now causes the system to be reset to the OA&M state.
          The reset cannot be cancelled after [Enter] has been pressed.

          The reset will be performed in a camp-on manner.

          Press [Cancel] to avoid doing the reset.









enter command: reset system oa&m
```

Figure F-12. Reset System OA&M Screen

3. Press F3 (Enter).

   The system reboots and returns to the DEFINITY AUDIX login prompt.

   NOTE:
   Do not log in at the first login prompt. The system displays the first prompt then continues the reset. Wait until the system displays the login prompt for several minutes before proceeding.

4. Log in as *craft*.
5. Enter **add tape**

   The system displays the Tape screen and displays the field values as it reads the tape.

   NOTE:
   If the system does not recognize the **add tape** command, the SCSI cable from the external drive may not be properly connected. If this occurs, follow the procedure below to re-seat the cable.

   a. Shut down the system and remove the DEFINITY AUDIX system from the switch carrier.
   b. Re-seat the cable to both the tape drive and the TN568 circuit pack.
   c. Insert the system back into the switch carrier and allow it to boot up.
   d. Log in as *craft*, then repeat Step 5.

6. As the system reads the tape, it displays two warning messages. These messages are normal and do not indicate a problem with the system. After each message, press F3 (Enter) to continue.

   NOTE:
   It can take several minutes for the system to read the tape. Check the status periodically using the **status tape** command.

7. After the tape drive becomes idle, wait at least 2 minutes before continuing.
8. After the system is idle for two minutes, enter **restore backups**

   After several minutes, the system displays the Backup screen with a numbered list of all the backups on the tape.

```
                                                                    Page 1 of 1
display backups
                                BACKUPS

      Backup Number to Restore:

 VOLUME LABEL:
             Volume Label Type: backup
             Volume Label Name: upgrade.backups
              Software Release: Release 4.0, Issue 1
                  Machine Name: drmfb16
                 Creation Date: 03/01/99

 VOLUME CONTENTS:
 Number          Type                      Name              Date      Time
   1      announcements          All                      03/01/99   12:21
   2      voice                  All                      03/01/99   12:19
   3      manual_weekly          All                      03/01/99   12:16
   4      manual_nightly                                  03/01/99   12:14


enter command:
```

Figure F-13. Restore Backups Screen

9. If you backed up custom announcements, enter the number corresponding to the backup file of the announcement set.

   The system restores the announcement sets.

   NOTE:
   This process takes approximately 15 minutes per installed language.

10. When the system finishes restoring the announcement sets, enter the number corresponding to the backup file for the voice mail.

    The system restores the voice mail files.

11. When the system finishes restoring the voice mail files, enter the number corresponding to the backup file of the weekly data.

    The system restores the weekly backup file.

12. When the system finishes restoring the weekly backup, Enter the number corresponding to the nightly backup file.

    The system restores the nightly backup file.

    NOTE:
    You must restore the nightly backup file last.The nightly backup performs audits to ensure the system works properly.

CAUTION:
Restoring the old configuration on the new system can generate switch alarms and cause minor switch problems.

13. Enter **reset system restart** to start up the DEFINITY AUDIX voice messaging system.
14. Call the remote service center to administer the default values for DEFINITY AUDIX and restore the system to its proper configuration.
15. Continue with Task F-9.

Task F-9: Remove the Tape Drive

Before you administer the new DEFINITY AUDIX and place the system in service, you must first remove the Tandberg tape drive and re-connect the MO-drive.

1. Remove the tape from the Tandberg tape drive.
2. Enter **reset system shutdown** to shut down the DEFINITY AUDIX system.
3. Verify that the DEFINITY AUDIX is shut down, then remove it from the switch carrier.
4. Disconnect the long SCSI cable from the TN568 circuit pack, and re-connect the MO-disk drive SCSI cable (H600-501 in Figure F-10).
5. Slide the DEFINITY AUDIX system back into the switch carrier and lock it into place.
6. Wait for the system to completely boot up, then log in as craft.
7. Continue with Task F-10.

Task F-10: Verify the DEFINITY AUDIX Administration

This task is required for all migrations to verify the customer options and make necessary changes to the DEFINITY AUDIX administration.

Customer options are normally activated before the system is shipped. Complete the first section of this task, "Display Customer Options", to verify that the settings on the System-Parameters Customer-Options screen are correct.

Task F-10A: Display Customer Options

1. At the DEFINITY AUDIX administration terminal, enter **display system-parameters customer options**

   The system displays the System-Parameters Customer-Options screen.

```
drmfb15     Active    Alarms:  m A  Thresholds: none                Logins: 2
change system-parameters customer-options                          Page 1 of 2
                         SYSTEM-PARAMETERS CUSTOMER-OPTIONS


                           Port Emulation Type: tn2181

                       Switch Integration Type: display-set

                 Maximum Number of Voice Ports: 12

    Maximum Number of Digital Networking Ports: 0

                        AMIS Analog Networking? y

                                   Multilingual? n

              Maximum Number of IMAPI Sessions: 32

              Hours of Voice Storage Purchased: 40
                              Total Hours on Disk: 95

enter command:
```

Figure F-14. System-Parameters Customer-Options Screen

2. Check that the values of the following fields on the System-Parameters Customer-Options screen are correct.
   - Port Emulation Type
   - Switch Integration Type
   - Maximum Number of Voice Ports
   - Maximum Number of Digital Networking Ports
   - AMIS Analog Networking?
   - Multilingual?
   - Maximum Number of IMAPI Sessions
   - Hours of Voice Storage Purchased
3. If the value in any of these fields needs to be changed, call the remote service center.
4. Continue with Task F-10B.

Task F-10B: Verify the Voice Port Configuration

The DEFINITY AUDIX voice ports and extensions must reflect the new configuration required by the migration.

1. With the cursor on the DEFINITY AUDIX command line, type **change voice-group** and press RETURN.

   The system displays the Voice Group screen

```
drmfb15      Active     Alarms:  m A  Thresholds: none                    Logins: 2
change voice-group                                                       Page 1 of 1
                                   VOICE GROUP

          Member  Port    Extension            Member  Port    Extension

             1    01C0601 64001                  2    01C0602 64002
             3    01C0603 64003                  4    01C0604 64004
             5    01C0605 64005                  6    01C0606 64006
             7    01C0607 64007                  8    01C0608 64008
             9    01C0609 64009                 10    01C0610 64010
            11    01C0611 64011                 12    01C0612 64012

enter command: change voice-group
```

Figure F-15. Change Voice-Group Screen

2. Verify that the port locations and extensions match those required for the migration, and that the number of ports is correct for the new system.

   NOTE:
   DEFINITY AUDIX 4.0 supports a maximum of 12 voice ports with no networking port, or 8 voice ports with1 networking port.

3. If you moved the DEFINITY AUDIX circuit pack, change the port names to identify the new port locations.
4. Press F3 (Enter) to save the changes.
5. Continue with Task F-10C.

Task F-10C: Verify the Subscribers

1. With the cursor on the DEFINITY AUDIX command line, type **list subscribers** and press RETURN.

   The system displays the List Subscriber screen.

2. Verify that all subscribers are listed on the new system.
3. If any entries are missing or incorrect, see the DEFINITY AUDIX R4.0 Maintenance book to correct the problem.
4. Continue with Task F-11.

Task F-11: Administer Changes to the Switch

The port emulation of DEFINITY AUDIX 4.0 is quite different than previous versions of the system. Most switches recognize previous versions of DEFINITY AUDIX in its "native" mode. In the native mode, the switch recognizes the circuit pack of the DEFINITY AUDIX system as itself and reserves the correct number of slots for the system (2 slots for DEFINITY AUDIX 4.0, and 5 slots for previous versions). Native mode emulation helps service technicians quickly recognize a DEFINITY AUDIX system when diagnosing alarms or other problems. See the table, "Summary of Integrations, Emulations, and Capacities" at the beginning of Chapter 4 for a list of switches and the type of emulation.

All switches with R6 software or less recognize DEFINITY AUDIX 4.0 in the "non-native" mode. Thus when you migrate to DEFINITY AUDIX 4.0 in these switches, the emulation often changes from native to non-native. This change affects the recognition of the circuit pack and the administration of the stations.

Complete the following steps to ensure proper administration of the switch for the new system.

Task F-11A: Determine the Number of Voice Ports

Before you administer the voice ports, you must first determine the correct number of ports to administer on the switch.

1. Use the table below to determine the number of ports to administer on the switch:

	Old System		New System		
Switch	**Emulation**	**Number of Ports**	**Emulation**	**Number of Ports**	**Change**
G1, G3V1, System 75, or G3i-Global (digital port)	TN746 (analog ports)	1-16	TN746 (analog ports)	1-12	delete ports 13 to 16 if necessary
	TN754 (digital ports)	8	TN754	8	no change
G3V2 or greater	TN754	8	TN2181	12	add ports 9 to 12
	TN2181	16	TN2181	12	delete ports 13 to 16

2. Note the change in the number of voice ports from the old to the new system.
3. Continue with Task F-11B.

Task F-11B: Administer the Voice Port Station Screen

The sequence and steps for administering the voice port station screens depends on the change in the number of voice ports between the old and the new system.

1. Review the Table F-3 to determine the relevant instructions for your system.

Table F-3. Instructions for Changing the Station Screens of the Voice Ports

No Change in Voice ports	Increasing the Voice Ports from 8 to 12	Decreasing the Voice Ports from 16 to 12
1. Add the port name back to each of the voice ports (Task F-11B2). No other changes are necessary.	1. Duplicate port 8 to create port 12 (Task F-11B1). 2. Duplicate Port 1 to create ports 9 to 11 (Task F-11B1). 3. Change each of the station screens (Task F-11B2).	1. Change port 12 (Task F-11B2). ■ Type the port location in the `Port` field, and type **y** in the `Restrict Last Appearance` field on page 1 of the Station screen. ■ Set button 10 to **call-appr** on the Call Appearance screen 2. Change ports 1 to 11 (Task F-11B2). 3. Delete stations 13 through 16 (Task F-11B3).

2. Determine your next step:
   - To increase the number of voice ports, continue with Task F-11B1.
   - For any other procedure, continue with Task F-11B2.

Task F-11B1: Duplicate Voice Port Stations

To duplicate voice ports:

1. At the switch administration terminal, enter **duplicate station *extension***, where *extension* is the extension of the station you want to copy.
2. Create the voice ports specified in Table F-3.
3. Change the Port and Name field for each voice port.
4. Press ENTER to save the new voice ports.

Task F-11B2: Change Voice Port Stations

To change the voice port stations:

1. At the switch administration terminal, enter **change station *extension***, where *extension* is the extension number of the voice port you want to change.
2. Use the entries in the table below to change the following Station screen fields:

Table F-4. Station Screen Entries for DEFINITY AUDIX Voice Ports

Field	Entry
Type	System 75, G1, G3V1 with analog port emulation ■ **2500** System 75, G1, G3V1G3V2-V4, R5, R6 with digital port emulation ■ **7405D** G3R7 or greater ■ **ADX16D**
Port	The digital port equipment location of the DEFINITY AUDIX system TN568 circuit pack on the switch. Re-enter the 5 to 6 character field you "x"ed out in Task F-2 (for example, **1A0501**).
Name	If you changed the number of administered ports from 16 to 12, or from 16 to 8, enter the name AUDIX TRANSFER (all capital letters) for voice port 11 if administering 12-ports (TN2181 or TN746), or for voice port 7 if administering 8-ports (TN754). All other voice port names remain the same.
Restrict Last Appearance	12-port emulation (TN2181) ■ **n** for voice ports 5 through 11. ■ **y** for voice ports 1 through 4 and port 12. Call appearance 10 on voice port 12 should not receive incoming calls since other voice ports have a bridged appearance to call appearance 10 of voice port 12. An incoming call to this appearance would cause all voice ports to ring.

3. Press NEXTPAGE until the Call Appearances screen appears.
4. Set the BUTTON ASSIGNMENTS fields as follows:

   8-port emulation:

   - For voice port 8, set all ten BUTTON ASSIGNMENTS to **call-appr**
   - For ports 1 through 7, do the following:

a. Set the first nine BUTTON ASSIGNMENTS to **call-appr**

b. Set the tenth BUTTON ASSIGNMENTS to **bridg-appr *XXXX*** where ***XXXX*** equals the extension number of voice port 8.

12-port emulation:

- For ports 1 through 4 and port 12, set all ten BUTTON ASSIGNMENTS to **call-appr**
- For ports 5 through 11, do the following:

  a. Set the first nine BUTTON ASSIGNMENTS to **call-appr**

  b. Set the tenth BUTTON ASSIGNMENTS to **bridg-appr *XXXX*** where *XXXX* equals the extension number of voice port 12.

5. Press [ENTER] to save the Station screen changes.
6. Continue with Task F-11B3.

Task F-11B3: Delete the Voice Ports

If you migrated to a system that has fewer voice ports than the old system, you must delete the station entries of the excess voice ports.For instance, if the old system has 16 ports, and the new one has 12, you must delete the stations for ports 13 through 16.

To delete the voice ports:

1. At the switch administration terminal, enter **remove station *number***

   where *number* is the extension of the voice port you want to delete.

   The switch displays the station screen for this port.
2. Review the station screen to ensure it corresponds to the voice port you want to remove.
3. If this is the correct voice port, press [ENTER].

   The switch displays the following message:

   ```
   command successfully completed.
   ```
4. Repeat Task F-11B3 to delete other voice ports you removed from the hunt group.
5. Repeat steps 1 through 5 for the other voice ports you need to change.
6. Continue with Task F-11C.

Task F-11C: Add Voice Ports Back to the Hunt Group

Add the voice ports purchased for the system back into the DEFINITY AUDIX Hunt Group.

To add the voice ports:

1. At the switch administration terminal, enter **change hunt-group *number***

   where *number* is the number of the hunt group for the DEFINITY AUDIX system.

   The switch displays the Hunt Group screen.

2. Press NEXTPAGE until the switch displays the Group Member Assignments screen.

```
                                                          Page 2 of 6
                                HUNT GROUP
Group Number: 10      Group Extension: 12000      Group Type: ucd

Group Member Assignments

   Ext      Name                   Ext         Name                Ext        Name
1: 12001 AUDIX 1                     14: ____                         27: ____
2: 12002 AUDIX 2                     15: ____                         28: ____
3: 12003 AUDIX 3                     16: ____                         29: ____
4: 12004 AUDIX 4                     17: ____                         30: ____
5: 12005 AUDIX 5                     18: ____                         31: ____
6: 12006 AUDIX 6                     19: ____                         32: ____
7: 12007 AUDIX 6                     20: ____                         33: ____
8: 12008 AUDIX 8                     21: ____                         34: ____
9: 12009 AUDIX 9                     22:  ___                         35: ____
10:12010 AUDIX 10                    23:  ___                         36: ____
11:12011 AUDIX TRANSFER              24:  ___                         37: ____
12:12012 AUDIX 12                    25: __ _                         38: ____
13: ____                             26: _ __                         39: ____
                                                                      40: ____
```

Figure F-16. Example of the Hunt Group Group Member Assignments Screen, (G3i/G3s/G3vs)

3. Type the extensions of the all the voice ports that are part of the new DEFINITY AUDIX system.

   NOTE:
   If you do not know the extensions of the new system, enter **display voice-group** on the DEFINITY AUDIX terminal, and write down the extensions of the voice ports on the screen.

4. Press ENTER to save the changes to the hunt group.

5. Continue with Task F-12.

Task F-12: Complete Additional Migration Tasks

To complete the migration, you (or the customer) must complete a number of additional installation tasks. These may include:

- Administering additional languages
- Testing alarms
- Administering remote terminals
- Backing up the system
- Testing digital networking
- Testing remote machines

Refer to the DEFINITY AUDIX R4.0 Administration book for instructions to complete these tasks.

Announcement Set Considerations and Installation

G

This appendix describes customized announcement sets and fragments, and includes procedures for installing additional language sets.

Customized Announcement and Fragments

If the customer added or deleted announcements, contact Tier 3 engineers for technical support. If the customer modified standard announcements, the customer should consider the viability of using them in the upgrade. If the standard announcement set was changed in R4.0, the modified announcements may not make sense in the new context. To check the context, examine the contents of the modified announcement and all fragments called by that announcement. If the customer decides the modified announcement will work in a meaningful way, it can then be copied to the announcement set being used.

Customer Modified and Added Fragments

It is possible the official fragment has changed and the customer's version may not make sense each time and place the official fragment is used. If it can no longer be used effectively, the customer should delete it from the ***.cust** directory.

If the customer desires to reuse the fragment, they must assign it to an unused number in the 4000-4999 range reserved for customer use. It can then be copied to the desired announcement set.

Announcement Set Identifiers

The following table lists the names assigned to representative announcement sets available to DEFINITY AUDIX users. Note that names of the verbose (standard) sets can be no longer than eight characters in length.

The names of these announcement sets are listed in the first column. These names are also printed on the magneto-optical disk cartridge labels and are listed on the several DEFINITY AUDIX screens such as *Add Announcements* and

List Announcements. See the procedure below for installing additional language sets.

The numbers in the second column are the touch-tone equivalents for the R4.0 announcement set names. These codes are used only by the system administrator. Note that the hyphens in the numbers are ignored.

The recorded words in the third column are the language's self-identifying announcement used by the Multilingual feature. These are stored in *Announcement #1143*.

The recorded words in the fourth column are announcement set identifiers used when system administrators edit announcement sets. For all announcement sets, these names are played in *Announcement #855*.

NOTE:
The following table offers a representative list of announcements. The list of available announcements constantly changes. Contact your Lucent representative for an up-to-date list.

Announcement Set Names	Touch-Tone ID	Multilingual Self-ID Announcement	Administration Self-ID Announcement
us-eng (standard)	87364	"English"	"Standard US English" ("Standard American")
us-eng-t (terse)	873648	"English"	"Terse US English" ("Terse American")
us-123 (123stand)	87123	"English"	"123 Standard US English" ("123 Standard American")
british (british)	2748474	"English"	"British-English" ("British-English")
lat-span (lat-span)	5287726	"Español"	"Español" ("Latin-Spanish")
french-c (french-c)	3736242	"Francais"	"Canadien Francais" ("Canadien Francais")
us-tdd	87833	"TDD ENGLISH"	Standard U.S. TDD
dutch	38824	"Nederlands"	"Nederlands"
german	437626	Deutsch	Deutsch
portug	767884	Português	Português

Installing Additional Language Sets

Perform the following procedure to add new language sets while restoring a DEFINITY AUDIX system. Each language set is provided on its own magneto-optical disk cartridge.

1. Inform subscribers through a broadcast message that the DEFINITY AUDIX system will be taken off the line for up to half an hour.
2. Log in to the DEFINITY AUDIX System on the administration terminal as *craft*.
3. Enter **reset system oa&m**

   Use the *camp-on* option to allow any callers to complete their messages. The system resets to the Operations, Administration, and Maintenance (OA&M) state.
4. Press F3 (Enter).

   The system stops all calls and the cursor returns to the DEFINITY AUDIX login prompt.
5. Login as *craft*.
6. Enter **remove mo-disk**
7. Remove the magneto-optical disk cartridge from the MO-drive and insert the new language disk cartridge.
8. Enter **add mo-disk**

   The add operation takes approximately 15 seconds and is done in the background. When the operation is complete, the Status Disk screen will show `In service, idle`.
9. Enter **restore backups**

   The system restores the new language set from the magneto-optical disk cartridge.
10. Press RETURN to confirm this operation.
11. Enter **remove mo-disk**
12. If more than one language set is being added to the system, repeat Step 6 through Step 11 with each new language disk cartridge.
13. Remove the new language disk cartridge and insert the original backup disk cartridge.
14. Enter **reset system restart**
15. The system reboots and returns to the AUDIX state.

Terminal and Modem Settings

H

This appendix contains a list of option settings for supported terminals and modems, although in most cases you must refer to the appropriate manual supplied with the terminal and modem for procedures to set these options.

Terminal Option Settings

This section lists the option settings required for a terminal or PC to work effectively with the DEFINIITY AUDIX system. If the terminal is connected to both the switch and the DEFINITY AUDIX, it must be administered in the dual port mode so that users can toggle between the two systems.

CAUTION:
If you connect a terminal or PC to a DEFINITY AUDIX system installed in a DC-powered switch, you must install an opto-isolator in the circuit. Refer to Task 2-3A in Chapter 2 for installation instructions.

Following are a list of important terminal settings. Refer to the appropriate manual supplied with the terminal for specific instructions on setting these options.

Administer the terminal for dual host support if the DEFINITY AUDIX system and the switch use the same terminal.

Table H-1. Terminal Option Settings

Option	Setting
Lines	24
Columns	8ø
Reverse video	no
Scrolling	user preference
Scroll speed	user preference
Key click	user preference
Font size	large
Parallel port	enabled (if connecting a parallel printer)

Table H-2. Terminal Communication Option Settings (Dual Host Support)

Option	Main Setting (Switch)	Aux Setting (AUDIX)
Port mapping	port 1	port 2
Port service	host	host
Speed	96øø	96øø
Stop bits	1	1
Data bits	7	7
Send parity	space	space
Check parity	no	no
Local Echo	off	off
Encoding	off	off
Generate flow	XON/XOFF	XON/XOFF
Receive flow	XON/XOFF	XON/XOFF[1]
Answerback on connect	no	no
Clear communication port	main	aux

1. This option may also be set to none.

Table H-3. Terminal General Option Settings

Option	Window 1 (Switch)	Window 2 (AUDIX)
Emulation	BCS	BCS
Newline on CR	no	no
Transmit controls	7 bits	7 bits
Backspace mode	normal	normal

Table H-4. Terminal Display Option Settings

Option	Window 1 (Switch)	Window2 (AUDIX)
Monitor mode	off	off
Cursor type	block	block
Cursor blink	on	on
Display cursor	yes	yes
Status line position	bottom	bottom
Status line type	host	host
Character mode	multnatl	multnatl
International font	ISO Latn	ISO Latn
Autowrap	on	on

Table H-5. Terminal Keyboard Option Settings

Option	Window 1 (Switch)	Window 2 (AUDIX)
Enter key	ESC S B[1]	ent[2]
Break key	enabled	enabled
Swap delete	yes	yes
Control key swapping	none	none

1. This option is loaded by the DEFINITY switch.
2. This option is loaded by the DEFINITY AUDIX system.

For auxiliary printer options, set the options on the printer as described in the manual supplied with the printer, then set the corresponding options on the terminal to match.

Modem Option Settings (for Port C Modems)

The DEFINITY AUDIX system supports external modems that use the Hayes command set. This includes modems manufactured outside the United States.

This document describes the initialization settings for the following modems:

- US Robotics Sportster 33.6
- Paradyne Comsphere Models 3810 and 3820
- Paradyne Comsphere Model 3910
- Paradyne Comsphere Model 3910
- 7400A Data Module Settings
- 7400B Data Module Settings

If your modem is not listed, see "Paradyne Comsphere Model 3910" on page H-6 for a list of requirements and suggested modem settings.

CAUTION:
If you connect a modem to a DEFINITY AUDIX system installed in a DC-powered switch, you must use a ground-isolated modem.

US Robotics Sportster 33.6

The US Robotics Sportster modems are shipped from the factory with default option settings. Use the following procedure to change the settings when using this modem with the DEFINITY AUDIX System.

1. Connect the modem to a terminal (for example, the 715 BCT) with the terminal speed set at 96ØØ bps.

   NOTE:
   The maximum modulation data rate must be set to 9600 bps when this modem is connected to DEFINITY AUDIX.

2. Enter **AT** to get the OK prompt
3. Enter the following initialization string:

   AT&FØ&WØ

This string initializes the modem to perform basic tasks with DEFINITY AUDIX. When the DEFINITY AUDIX system boots up, it automatically resets the modem initialization string with the value listed on the System-Parameters Maintenance screen (Task 10-1 in Chapter 10). The default value for this initialization string was designed to optimize the performance of the US Robotics modem. This value is listed below:

AT&FØE1X4&A3&B1&KØ&N6&U2SØ=1S13=1YØ&WØ

4. Enable Auto Answer by turning the dip switch 5 setting to off.

   The dip switches are located on the back of the modem. See the user's manual for instructions to change the dip switch setting.

Paradyne Comsphere Models 3810 and 3820

The Paradyne Comsphere modem is shipped from the factory with default option settings. Use the following procedure to change the settings when using this modem with the DEFINITY AUDIX System.

1. Connect the modem to a terminal (for example, the 715 BCT) with the terminal speed set at 9600 bps.

   NOTE:
   The maximum modulation data rate must be set to 9600 bps when this modem is connected to DEFINITY AUDIX.

2. Enter **AT** to get the OK prompt.
3. Enter the following string:

   AT&FØ&WØ

   This string initializes the modem to perform basic tasks with DEFINITY AUDIX. When the DEFINITY AUDIX system boots up, it automatically resets the remote modem initialization string with the value listed on the System-Parameters Maintenance screen.

4. Follow Task 10-1 in Chapter 10 to access the System-Parameters Maintenance screen.
5. Enter the following value on this screen:

   AT&FØE1BØX6YØ&D2&T5\K1\QØ%CØ"HØS41=3S49=ØS55=1&WØ

6. Enable Auto Answer.

   See the Paradyne user's manual for instructions to enable Auto Answer.

Paradyne Comsphere Model 3910

The Paradyne Comsphere modem is shipped from the factory with default option settings. Use the following procedure to change the settings when using this modem with the DEFINITY AUDIX System.

1. Connect the modem to a terminal (for example, the 715 BCT) with the terminal speed set at 9600 bps.

   NOTE:
   The maximum modulation data rate must be set to 9600 bps when this modem is connected to DEFINITY AUDIX.

2. Enter **AT** to get the OK prompt.
3. Enter the following string:

   AT&FØ&WØ

   This string initializes the modem to perform basic tasks with DEFINITY AUDIX. When the DEFINITY AUDIX system boots up, it automatically resets the remote modem initialization string with the value listed on the System-Parameters Maintenance screen.

4. Refer to Task 10-1 in Chapter 10, and access the System-Parameters Maintenance screen.
5. Enter the following value on this screen:

   AT&FØE1X6YØ&D2&T5\K1\QØ%CØ"HØS41=3S49=ØS55=1&WØ

6. Enable Auto Answer.

   See the Paradyne user's manual for instructions to enable Auto Answer.

Generic Modems

DEFINITY AUDIX requires a modem (domestic or international) that supports the features listed in Table H-6. Use the table to create an initialization string for your modem that includes these features.

Table H-6. Modem Features Required to Interface with DEFINITY AUDIX

Feature	Sportster Option
Hayes command set	
modem echoes keyboard commands	E1
Enable result code display	Qø
Display verbal result codes	V1

Table H-6. Modem Features Required to Interface with DEFINITY AUDIX

Feature	Sportster Option
At a minimum, modem must display the following result codes: OK, CONNECT, RING, NO CARRIER, ERROR, CONNNECTxxxx (where xxxx is the modem speed), NO DIALTONE, BUSY, NO ANSWER	X4
Reset the modem to the initialization string stored in NVRAM (non-volatile memory)	Yø
Enable fixed serial port rate	&B1
Normal CD operations	&C1
Normal DTR operations	&D2
Ability to set Guard Tones	&Gø
Disable transmit hardware and software flow controls	&Hø
Disable receive software flow control	&Iø
Disable data compression	&Kø
Enable error control	&M4
Set top connect speed to 9600bps	&N6
Hardware flow control: ignore RTS	&R1
Override DSR, always on	&Sø
Set bottom connect speed to 1200 bps	&U2
Stores the initialization string in NVRAM	&Wø
Set break handling to destructive, expedited	&Y1
Enable auto answer after one ring	Sø=1
Reset the modem when DTR drops	S13=1

CAUTION:
If the DEFINITY AUDIX system is installed in a DC-powered switch, you must use a ground-isolated modem.

The following screen shows the optimized modem setting for a US Robotics Sportster 33.6 integrated with DEFINITY AUDIX 4.0.

```
OK
ati4


USRobotics Sportster 33600 Fax Settings...

   B0  E1  F1  M1  Q0  V1  X4  Y0
   BAUD=9600  PARITY=N  WORDLEN=8
   DIAL=HUNT   ON HOOK

   &A3  &B1  &C1  &D2  &G0  &H0  &I0  &K0  &M4  &N6
   &P0  &R1  &S0  &T5  &U2  &Y1

   S00=001  S01=000  S02=043  S03=013  S04=010  S05=008  S06=002
   S07=060  S08=002  S09=006  S10=014  S11=070  S12=050  S13=001
   S15=000  S16=000  S18=000  S19=000  S21=010  S22=017  S23=019
   S25=005  S27=000  S28=008  S29=020  S30=000  S31=128  S32=002
   S33=000  S34=000  S36=014  S38=000  S39=000  S41=000
```

Figure H-1. Optimized Modem Settings for a US Robotics Sportster 33.6

If you need more detailed information to optimize your modem for DEFINITY AUDIX, go to the following web site:

http://www.usr.com/home/online/

Navigate to the Sportster technical manual and look up the option settings located in the Technical Quick Reference section at the back of the manual. Use the manual to determine the function of the options listed in Figure H-1 and create equivalent settings for your own modem.

7400A Data Module Settings

In the *set interface* option menu, set the ANS ONLY? option to YES. Then select the following options:

Option	Setting
BAUD RATE	1200 and 9600
ANS	AUTO
BRK DISK	LONG
CI	OFF
CH	OFF
CTS	ON
DCD	NORMAL
DSR	ON
DTR	50 Msec
DTR	FOLLOW
LL	OFF
REMLOOP	GRANT
RI	ON
RL	OFF
SIGLS DISC	OFF
TM	OFF
DONE	YES

See *7400A Data Module User's Manual*, 555-020-706, for instructions on how to set options on the 7400A data module.

7400B Data Module Settings

Set the two dip switches located under the top panel of the 7400B data module as follows:

- SW1-1:
  - Set to ON if a telephone is *not* attached to the 7400B.
  - Set to OFF if a telephone *is* attached to the 7400B.
- SW1-5: ON

See *7400B Plus Data Module User's Guide*, 555-020-710, for instructions on how to set options on the 7400B data module.

MPDM Option Settings

This section describes how to configure a 7400D to be used as an MPDM data module in a control link installation.

7400D Data Module Settings

The data module includes the following three buttons on the front panel. Use these buttons to navigate through the menus and to set options:

- next/no - Displays the next option or setting
- back - Returns to the previous option or setting
- enter/yes - Selects the current option or setting

When the data module is turned on, it initiates a self-test. Once the test successfully completes, the data module displays *home display*.

NOTE:
To return to the *home display* screen at any point in the procedure, simultaneously press the next/no and back buttons.

Use the following procedure and refer to Table H-7 below to set the options on the data module:

1. At the *home display* screen, press **next/no**

   The data module displays `set` *`option`*`?`, where *`option`* is the name of a configurable option.

2. To view the next option, press **next/no**, or complete the following steps to set the option:

   a. Press **enter/yes** to select the option.

   b. Press **next/no** until the desired setting appears.

   c. Press **enter/yes** to select the setting.

   After selecting a setting, the data module displays the following question: `continue?`

   d. Press **enter/yes**

   NOTE:
   To find an option, press **next/no** repeatedly to cycle through the available options.

3. After cycling through the available options, the data module displays `done?`

4. Press **enter/yes**

5. The data module displays `save changes?`
6. Press **enter/yes** to save the changes.

For each of the following options, select the corresponding setting from the table below:

Table H-7. Option Settings for the 7400D Data Module

OPTION	SETTING
9600 Speed	ON
answer	AUTO
ci lead	ON
ch lead	OFF
cts lead	NORMAL
dcd lead	ON
dsr lead	ON
dtr detect	50 msec
dtr lead	IGNORE
ri lead	ON
sigs disc[1]	ON
tm lead	OFF
save changes	YES

1. Signal Loss Disconnect

Changing Switch Integrations, Port Emulations, and Number of Voice Ports

I

This appendix describes the tasks needed to change various aspects of the switch administration of the DEFINITY AUDIX system.

Changing from Analog to Digital Port Emulation

This section describes the tasks needed to change the switch administration of the DEFINITY AUDIX system to digital port emulation from analog port emulation. You must perform this task to allow your system to use the digital networking feature.

Verifying the Emulation and Integration Types

Before you administer the switch to support CL integration with digital ports, the remote service center should change the emulation defined within the DEFINITY AUDIX system. Do the following to be sure the integration has been changed.

1. At the DEFINITY AUDIX administration terminal, log into the DEFINITY AUDIX system.
2. On the DEFINITY AUDIX command line, enter **display system-parameters customer-options**

   The system displays the System Parameters Customer Options screen.
3. Check the `Port Emulation Type` field for one of the following values:
   - **tn2181** (12-port system)
   - **tn754** (8-port system)
4. If one of these values is not present, call the remote service center immediately to arrange to change the value.

NOTE:
Reboot the DEFINITY AUDIX machine after the emulation designation has been changed and before you do the next task.

Verifying the DEFINITY AUDIX TN568 Circuit Pack

1. At the switch administration terminal, enter **list configuration board *slot*** where *slot* is the location of the TN568 circuit pack in the switch carrier. If you do not know the slot location of the DEFINITY AUDIX circuit pack, enter **list configuration** to display a list of the circuit packs for the switch.
2. Verify that the DEFINITY AUDIX TN 568 circuit pack is recognized as a TN754B circuit pack (System 75/G1/G3V1), a TN2181 circuit pack (G3V2 through R6), or a TN568 circuit pack (R7 or greater).

If the circuit pack is not recognized correctly, enter **change circuit-packs *cabinet*** to display the circuit pack screen. Conflict markers (# sign) most likely will display to the right of the `Code` field on the circuit pack screen for the two slots occupied by the DEFINITY AUDIX system. Refer to Task 4-1 in Chapter 4 for instructions on changing the DEFINITY AUDIX circuit pack designation.

Administering the Voice Ports

See Task 4-6 in Chapter 4 for instructions on administering digital ports.

Changing the Hunt Group

See Task 4-7 in Chapter 4 for instructions on assigning the hunt group for the DEFINITY AUDIX system. You will change the hunt group instead of adding the hunt group.

1. Enter **change hunt-group *number***
2. For G3r/R5r, make changes to page 2 of the Hunt Group screen as described in Task 4-7 in Chapter 4. In most cases, you will change the `Message Center` name from **audix** to **none** and, for G3r/R5r or greater, to delete any entry in the `Message Center AUDIX Name` field.

Adding the Voice Port Coverage Path

Add the voice port coverage path for digital port emulation. Refer to “Defining the Call Coverage Path for Voice Ports” in Chapter 4 for instructions on adding the coverage path.

Changing from CL Integration — Analog to DS Integration — Digital

This section describes the tasks needed to change the switch administration of the DEFINITY AUDIX system to DS integration from CL integration.

Verifying the Emulation and Integration Types

Before changing the switch from supporting CL integration to supporting DS integration begins, the remote service center must change the integration defined within the DEFINITY AUDIX system. Do the following to be sure the integration has been changed.

1. At the DEFINITY AUDIX administration terminal, log into the DEFINITY AUDIX system.
2. On the DEFINITY AUDIX command line, enter **display system-parameters customer-options**

   The system displays the System Parameters Customer Options screen.
3. Check the `Port Emulation Type` field for one of the following values:
   - **tn2181** (12-port system)
   - **tn754** (8-port system)
4. Check the `Switch Integration Type` field for **display-set**
5. If these values are not present in one or both of the fields, call the remote service center immediately to arrange to change the values.

NOTE:
Reboot the DEFINITY AUDIX system after the integration (and emulation) designations have been changed and before you do Removing Voice Ports.

Removing Voice Ports

Before changing from one configuration to another, you need to first remove existing voice ports on the switch.

Verifying the Port IDs of the Voice Ports

Verify the port identifications and port type of the voice ports.

1. At the switch administration terminal, enter **list station *extension* count *n*** where *extension* is the first extension in the hunt group and *n* is the number of voice ports.

   The List Station screen appears.

   NOTE:
   This command works only if the voice port extensions are in sequence (for example, 55555, 55556, 55557, and so on). If you created extensions that are not sequential, use the **list station** *extension* command.

```
list station 12001 count 16                                        Page 1

                            STATIONS

Ext.   Port   Type   Name   Room   Data   Cov.  COR   COS   Cable Jack
                                   Ext.   Path

12001  A0501  2500   AUDIX 1                     1     1
12002  A0502  2500   AUDIX 2                     1     1
12003  A0503  2500   AUDIX 3                     1     1
12004  A0504  2500   AUDIX 4                     1     1
12005  A0505  2500   AUDIX 5                     1     1
12006  A0506  2500   AUDIX 6                     1     1
12007  A0507  2500   AUDIX 7                     1     1
12008  A0508  2500   AUDIX 8                     1     1
12009  A0509  2500   AUDIX 9                     1     1
12010  A0510  2500   AUDIX 10                    1     1
12011  A0511  2500   AUDIX 11                    1     1
12012  A0512  2500   AUDIX 12                    1     1
```

Figure I-1. Voice Port Stations

2. Record the extension and port numbers for each port. Note also if the ports are digital or analog. The following port types are all analog:
   - **2500** (System 75, G1, G3V1, and G3i-Global)
   - **ADXCL** (G3V2/V3/V4/R5/R6)
   - **ADX16A** (R7 or greater)
3. Determine your next step:
   - If the ports are analog, continue with "Removing Existing Voice Ports".
   - If the ports are digital, continue with "Verifying the Circuit Pack" on page I-6 .

Removing Existing Voice Ports

Use the following procedure to remove the voice ports from both the hunt group and from the switch.

1. Enter **list hunt-group** to locate the DEFINITY AUDIX system hunt group.

   The figure below shows the DEFINITY AUDIX hunt group listed for a switch identified by the Group Name AUDIX.

```
list hunt-group                                                    Page 1

                              HUNT GROUP

Grp   Grp   Type   Group Name   ACD   MIS   Queue    No. of   Covg.   Message
No.   Ext.                                   Length   Members  Path    Center

10    12000 ucd    AUDIX        n     n     12       12
```

Figure I-2. Example of a Voice Port Hunt Group screen

2. Enter **change hunt-group *number*** where *number* is the hunt group number.

3. Press NEXTPAGE twice to display the Hunt Group screen — Group Member Assignments.

```
 change hunt-group 10                                          Page 2 of 5

                                HUNT GROUP

    Group Number: 10       Group Extension: 12000            Group Type: ucd

Group Member Assignments

      Ext     Name                          Ext     Name

   1: 12001 AUDIX 1                         14: 12014 AUDIX 14
   2: 12002 AUDIX 2                         15: 12015 AUDIX 15
   3: 12003 AUDIX 3                         16: 12016 AUDIX 16
   4: 12004 AUDIX 4                         17: ____
   5: 12005 AUDIX 5                         18: ____
   6: 12006 AUDIX 6                         19: ____
   7: 12007 AUDIX 7                         20: ____
   8: 12008 AUDIX 8                         21: ____
   9: 12009 AUDIX 9                         22: ____
  10: 12010 AUDIX 10                        23: ____
  11: 12011 AUDIX 11                        24: ____
  12: 12012 AUDIX 12                        25: ____
  13: 12013 AUDIX 13                        26: ____
```

Figure I-3. Example of a Hunt Group Screen — Group Member Assignments

4. Move the cursor to the `Ext` field for each voice port you need to remove. Press CLR-FLD to remove data from the field.
5. Press ENTER.
6. Enter **remove station *extension*** for each voice port you need to remove.

Verifying the Circuit Pack

1. At the switch administration terminal, enter **list configuration board *slot*** where *slot* is the port location of the DEFINITY AUDIX MFB. If you do not know the slot location of the DEFINITY AUDIX circuit pack, enter **list configuration** to display a list of the circuit packs for the switch.
2. Verify that the circuit pack is recognized as a TN754B circuit pack (System 75/G1/G3V1) a TN568 circuit pack (R7 or greater) or a TN2181 circuit pack (R6 or less with 12 ports).

The following figure shows an example of the List Configuration screen, in this case, for a TN2181, 12-port digital emulation.

```
 list configuration all                                        Page 2 of 5

                         SYSTEM CONFIGURATION

Board                                                Assigned Ports
Number    Board Type         Code     Vintage    u=unassigned t=tti

01A01     ANALOG LINE         TN746B  000002     u  02 03 04 05 06 07 08
                                                 09 10 11 u  u  u  u  u
01A02     DIGITAL LINE        TN754   000012     01 02 03 04 05 06 07 08
01A03     ANALOG LINE         TN742   000017     u  02 03 04 05 06 07 08
01A04     DATA LINE           TN726B  000003     01 u  u  u  u  u  u  u
01A05                                 no board   u  u  u  u  u  u  u  u
01A06                                 no board   u  u  u  u  u  u  u  u
01A07     RESERVED AUDIX      tn2181  audix      u  u  u  u  u  u  u  u
01A08     DIGITAL LINE        TN2181  000055     01 02 03 04 05 06 07 08
                                                 09 10 11 12
01A09                                 no board   u  u  u  u
01A10     TONE DETECTOR       TN748D  000001     01 02 03    05 06 07
```

Figure I-4. Example List Configuration Screen — TN2181 Digital Port Emulation

Administering the Voice Ports

Follow the instructions in Task 4-6 in Chapter 4 for instructions on adding voice ports with digital port emulation. DS integration requires digital port emulation.

Changing the Hunt Group

Refer to Task 4-7 for instructions on assigning the hunt group for the DEFINITY AUDIX system. You will change the hunt group instead of adding the hunt group.

1. Enter **change hunt-group *number***
2. For G3r/R5r or greater, make changes to page 2 of the Hunt Group screen. In most cases, you will change the `Message Center` name from **audix** to **none** and, for G3r/R5r or greater, to delete any entry in the `Message Center AUDIX Name` field.

Adding the Voice Port Coverage Path

Add the voice port coverage path for digital port emulation. Refer to “Defining the Call Coverage Path for Voice Ports” in Chapter 4 for instructions on adding the coverage path.

Changing Subscriber Stations

1. Enter **change station *extension*** for each subscriber station.
2. Change the `LWC Reception` field to the following:
   - **spe** for G3r/R5r
3. Change the `LWC Activation` field to **n**
4. Set `Coverage Msg Retrieval?` to **y**

Refer to Task 9-1 in Chapter 9 for further instructions on administering the subscribers.

Disabling the Data Link

Disable the data link for the CL integration. The DS integration of the DEFINITY AUDIX system does not use a data link.

1. At the switch administration terminal, enter **change communication-interface links**

   The switch displays the Interface Links screen.
2. Change the `Enable` field to **n** for the DEFINITY AUDIX system link.

Changing from DS Integration — Digital to CL Integration — Digital

This section describes the tasks needed to change the switch administration of the DEFINITY AUDIX system to CL integration from DS integration.

NOTE:
To perform this procedure, you must refer to two versions of the DEFINITY AUDIX installation book for your switch: the control-link version and the display set version.

Turning Off Message Waiting Indicators

You must turn off the message waiting indicators (MWIs) on subscribers' telephones before changing a system to CL integration. Otherwise, the indicators will be on indefinitely, whether or not subscribers have new messages.

To turn off the MWIs, do the following:

1. At the switch administration terminal, enter **change station *extension*** for the first voice port in the DEFINITY AUDIX hunt group.

   The switch displays the Station screen.

2. Press (NEXTPAGE) until the Feature Button Assignments page of the Station screen appears.
3. For feature button 1, replace **lwc-store** with **lwc-cancel**
4. For feature button 2, delete **lwc-cancel**
5. Press (ENTER) to save the changes.
6. Repeat Steps 1 through 5 for each voice port.

   As the switch performs audits on the voice ports, it turns off subscriber message waiting indicators. The switch requires approximately 15 seconds per subscriber to turn off the MWI. Therefore, you may have to wait up to several hours for all indicators to be turned off.

   NOTE:
   You do not have to wait until the MWI for each subscriber is turned off before proceeding with the remaining steps.

7. Log into the DEFINITY AUDIX system.
8. On the DEFINITY AUDIX command line, enter **display administration-log**

   The switch displays Page 1 of the Administration Log.
9. Enter the current date in the `Start Date` field and the current time in the `Time` field. Leave the `Type` field blank.

   The switch displays Page 2 of the Administration Log. The following log message appears for each subscriber with new messages in his or her mailbox:

   `AUDIX subscriber (ext. XXXXX) may have LWC disabled.`
10. Note a specific subscriber for which the preceding message occurs. Then wait for the message to appear a second time for the same subscriber. This means that the subscriber's MWI is turned off.

Verifying the Emulation and Integration Types

Before the change from DS integration to CL integration begins, the remote service center must change the integration defined for the DEFINITY AUDIX system. Do the following to be sure the integration has been changed.

1. Log into the DEFINITY AUDIX system.
2. On the DEFINITY AUDIX command line, enter **display system-parameters customer-options**

   The System Parameters Customer Options screen appears.
3. Check the `Port Emulation Type` field for the value **tn754** or **tn2181**
4. Check the `Switch Integration Type` field for **dciu-sci**

5. If these values are not present in one or both of the fields, call the remote service center immediately to arrange to change the values.

NOTE:
Reboot the DEFINITY AUDIX system after the integration (and emulation) designations have been changed and before you do Verifying the Circuit Pack.

Verifying the Circuit Pack

1. At the switch administration terminal, enter **list configuration board *slot*** where *slot* is the port location of the DEFINITY AUDIX TN568 circuit pack. If you do not know the slot location of the DEFINITY AUDIX circuit pack, enter **list configuration** to display the circuit packs for the switch. Look for a TN754 or TN2181 code.
2. Verify that the circuit pack is recognized as a TN754, TN2181 or TN568 circuit pack.

If the circuit pack is not recognized correctly, enter **change circuit-packs *cabinet*** to display the circuit pack form. Conflict markers (# sign) most likely will display to the right of the Code field on the circuit pack form for the two slots occupied by the DEFINITY AUDIX system. Refer to Task 4-1 in Chapter 4 for instructions on changing the DEFINITY AUDIX circuit pack designation.

Assigning User Defined Adjunct Names (G3r Only)

Complete Task 4-2 in Chapter 4 if this name has not been assigned previously for the DEFINITY AUDIX system.

Re-administering the Voice Ports

Reset Page 3 of the Station screen for the voice ports to show the following feature buttons:

1: lwc-store
2: lwc-cancel
3: aux-work Grp: *XX*

For more information on voice port administration, see the instructions on adding digital voice ports in Task 4-6 in Chapter 4.

Changing the Hunt Group

Refer to Task 4-7 in Chapter 4 for instructions on assigning the hunt group for the DEFINITY AUDIX system. You will change the hunt group instead of adding the hunt group.

1. Enter **change hunt-group *number***
2. Make changes to page 1 of the Hunt Group screen (also page 2 for G3r/R5r). In most cases, you will change the `Message Center` name from **none** to **audix** and, for G3r/R5r, you will also enter, in the `Message Center AUDIX Name` field, the name entered in Task 4-2.

Assigning the Data Link

Refer to Chapter 4 for instructions on assigning the data link for the DEFINITY AUDIX system.

Changing Subscriber Stations

1. Enter **change station *extension*** for each subscriber station.
2. Change the `LWC Reception` field to **audix** for each subscriber station if the subscriber is storing Leave Word Calling messages on the DEFINITY AUDIX system.
3. Set `LWC Activation?` to **y** if the subscriber is assigned the Leave Word Calling feature.
4. Set `Redirect Notification` to **y**
5. Set `Message Waiting Indication` to **led** or **neon** if the voice terminal has an MWI lamp. This step applies to 500, 2500, and 7104A voice terminals only.
6. Under `BUTTON ASSIGNMENTS`, enter the following button assignments to interact with DEFINITY AUDIX system features:
   - **call-fwd**
   - **goto-cover**
   - **lwc-store**
   - **send-calls**
7. Press [ENTER].

Refer to Task 9-1 in Chapter 9 for further instructions on administering the subscribers.

Checking the Switch Link

The switch link is the interface link assigned in Chapter 4.

1. Enter **busy link *switch link number*** to busy out the switch link.
2. Enter **test link *switch link number*** to test the switch link.
3. Enter **release link *switch link number*** to release the switch link.
4. Enter **status link *switch link number*** to check the status of the switch link.

   `in-service` is displayed if the link is in service.

Decreasing the Number of Digital Voice Ports from 12 to 8

To add a digital networking port to a system that already uses digital port emulation, you may need to decrease the total number of ports. On a switch to which you are adding a networking port, the number of voice ports may be no greater than 8.

To decrease the number of digital voice ports, do the following tasks:

- Change the Voice Group screen on the DEFINITY AUDIX system
- Verify DEFINITY AUDIX Customer Options
- Add Networking Ports
- Remove Ports from the Hunt Group

Changing the Voice Group Screen on the DEFINITY AUDIX System

To remove the voice ports on the DEFINITY AUDIX system, change the Voice Group screen.

To change the Voice Group screen:

1. On the DEFINITY AUDIX command line, enter **change voice-group**

   The Voice Group screen appears.
2. Delete voice ports 9 and above.

Verifying DEFINITY AUDIX Customer Options

To verify the DEFINITY AUDIX customer options:

1. Log into the DEFINITY AUDIX system.
2. On the DEFINITY AUDIX command line, enter **display system-parameters customer-options**

   The system displays the System Parameters Customer Options screen.
3. Check the `Maximum Number of Voice Ports` field for the new number of ports.
4. Check the `Maximum Number of Digital Networking Ports` field for the number of ports (one).
5. If these values are not correct in one or both of the fields, call the remote service center immediately to change the values.

Add a Networking Port

To add a networking port, you must administer the ports on the host switch. For information on administering the switch for digital networking, see *DEFINITY AUDIX System Digital Networking* (585-300-534).

Removing Ports from the Hunt Group

On the switch, remove any ports in the hunt group not intended for use by the DEFINITY AUDIX system. This task is necessary because the DEFINITY AUDIX system answers calls only on ports purchased for the system. If you assign more than the number of ports purchased, some calls to the DEFINITY AUDIX system are not answered.

To remove the additional voice ports to a hunt group, use the following procedure:

1. At the switch administration terminal, enter **change hunt-group *number***

   where number is the number of the Hunt Group assigned to the DEFINITY AUDIX system.

The switch displays the Hunt Group screen.

```
change hunt-group 10                                          Page 1 of 6
                                 HUNT GROUP
   Group Number: 10          Group Extension: 12000    Group Type: ucd
     Group Name: AUDIX         Coverage Path: ____            COR? 1
  Security Code: _____        Message Center: none            ACD? n
          Queue? y Night Service Destination: ____         Vector? n

ISDN Caller Disp: ________

                Queue Length: 8
     Calls Warning Threshold:                Calls Warning Port: _____
      Time Warning Threshold:                 Time Warning Port: _____
First Announcement Extension:___ First Announcement Delay (sec): ___
```

Figure I-5. Example of a Hunt Group Screen — Page 1 (G3i/G3s/G3vs)

2. Press NEXTPAGE until the switch displays the Group Member Assignments screen.

```
                                                          Page 2 of 6
                                 HUNT GROUP
 Group Number: 10      Group Extension: 12000      Group Type: ucd

 Group Member Assignments

    Ext     Name                  Ext        Name                Ext        Name
 1: 12001 AUDIX 1                   14: ____                       27: ____
 2: 12002 AUDIX 2                   15: ____                       28: ____
 3: 12003 AUDIX 3                   16: ____                       29: ____
 4: 12004 AUDIX 4                   17: ____                       30: ____
 5: 12005 AUDIX 5                   18: ____                       31: ____
 6: 12006 AUDIX 6                   19: ____                       32: ____
 7: 12007 AUDIX 6                   20: ____                       33: ____
 8: 12008 AUDIX 8                   21: ____                       34: ____
 9: 12009 AUDIX 9                   22: ____                       35: ____
 10:12010 AUDIX 10                  23: ____                       36: ____
 11:12011 AUDIX TRANSFER            24: ____                       37: ____
 12:12012 AUDIX 12                  25: ____                       38: ____
13:____                     26: ___                 39:____
                                                                   40: ____
```

Figure I-6. Example of a Hunt Group Screen — Page 2, Group Member Assignments (G3i/G3s/G3vs)

3. Remove the extensions of ports you just removed from the DEFINITY AUDIX system.

4. Press ENTER to save the changes to the hunt group.

Removing Voice Ports

On the switch, you should delete any ports you removed from the Hunt Group

To delete the voice ports:

1. At the switch administration terminal, enter **remove station *number***

   where *number* is the extension of the voice port you want to delete.

   The switch displays the station screen for this phone.

2. Review the station screen to ensure it corresponds to the voice port you want to remove.

3. If this is the correct voice port, press [ENTER].

   The switch displays the following message:

   ```
   command successfully completed.
   ```

4. Repeat Step 1 through Step 3 to delete other voice ports you removed from the Hunt Group.

Analog Port Administration

J

This appendix describes the tasks needed to administer analog port emulation. Analog port emulation was used in DEFINITY AUDIX releases 2.0, 3.0, and 3.1 when control link integration was desired. With DEFINITY AUDIX 4.0, digital port emulation can be used with both display set integration and control link integration. These procedures are included here for those customers who may have upgraded to release 4.0, but did not change from analog port emulation to digital port emulation.

G3r/R5r

This section includes the procedures for administering analog port emulation with G3r/R5r or greater switches.

Task J-1: Identifying the Circuit Pack — Analog Emulation

1. At the switch administration terminal, enter **change circuit-packs *cabinet*** to administer the DEFINITY AUDIX circuit pack on the switch; or, enter **display circuit-packs *cabinet*** to ensure that the switch has recognized the installed circuit pack.

   The switch displays the Circuit Pack screen.

```
change circuit-packs 2                                          Page 4 of 5
                              CIRCUIT PACKS
        Cabinet: 2                              Carrier: D
Cabinet Layout: five-carrier              Carrier Type: port

Slot Code Sfx Name                        Slot Code Sfx Name
 00: TN771 C  MAINTENANCE/TEST             11: TN726 B  DATA LINE
 01: TN768 _  TONE/CLOCK                   12: TN747 B  CO TRUNK
 02: TN570 _  EXPANSION INTF               13: TN464 C  UDS1 INTERFACE
 03: TN748 C  TONE DETECTOR                14: TN754 B  DIGITAL LINE
 04: TN754 B  DIGITAL LINE                 15: TN754 B  DIGITAL LINE
 05: TN754 B  DIGITAL LINE                 16:
 06: TN754 B  DIGITAL LINE                 17:
 07: TN754 B  DIGITAL LINE                 18: ADXCL    RESERVED-CL
 08: TN754 B  DIGITAL LINE                 19: TN568    AUDIX BOARD
 09: TN754 B  DIGITAL LINE                 20:
 10: TN762 B  HYBRID LINE                  21: _____ _   _______________

 '#' indicates circuit pack conflict.
```

Figure J-1. Example of a Circuit Pack Screen (G3rV2/G3rV3) — Analog Emulation

NOTE:
For G3R7, slot 1 on the DEFINITY AUDIX system will show `ADX12A` `RESERVED-AUDIX-12A`.

2. Use the entries in the table below to administer the DEFINITY AUDIX TN568 circuit pack.

Table J-1. Circuit Pack Screen Entries — G3r/R5r or grater

Field	Description
Slot	The port slot in which the DEFINITY AUDIX TN568 circuit pack resides. This is slot 2 of the two slots occupied by the DEFINITY AUDIX system. There are restrictions on how far to the left the DEFINITY AUDIX system can be placed in the carrier. See Appendix A for these restrictions.
Code	Enter the circuit pack identification code in slot 2. n **TN746** (for G3V2-V4/R5/R6) n **TN568** for R7 or greater switches The switch populates the remaining information, if any, for slot 1.
Sfx	Leave this field blank.
Name	`AUDIX BOARD` appears in slot 2 for G3V2/G3V3. `MFB` appears in slot 2 for G3V4/R5. In the other slot, `RESERVED-CL` (G3V2/G3V3) or `RESERVED-AUDIX-16A` (G3V4/R5) appears.

3. Press [ENTER] to save changes.

Task J-2: Assigning the User Defined Adjunct Names

Refer to Task 4-2 in Chapter 4 to complete this section.

Task J-3: Administering the Voice Ports as Stations

In the following procedure, you will administer each of the DEFINITY AUDIX system voice ports.

Refer to Appendix B to complete this section. The worksheets should have been completed with the customer during the planning phase for the DEFINITY AUDIX system.

Use the following procedure to administer the voice ports:

1. Administer voice port 1.

2. Duplicate voice port 1 for the remainder of voice ports.
3. Change the Port and Name fields for each of the duplicated ports.

Task J-3A: Completing the Station Screen

The first step is to administer the DEFINITY AUDIX voice ports. Refer to Worksheet B-5 for the information required to complete the screens.

NOTE:
Access the analog version of this document (G1/TN746 emulation) to view Worksheet B-5.

Complete the following steps:

1. At the switch administration terminal, enter **add station *extension*** to add a voice port. The extension number must be the same length as the DEFINITY AUDIX subscriber extension numbers.

   The switch displays the Station screen.

```
add station 12001                                          Page 1 of 1
                                   STATION

    Extension: 12001        BCC: 0
         Type: ADXCL             Lock Messages: n       COR: 1
         Port: 01A0501           Security Code: ____    COS: 1
         Name: AUDIX 1           Coverage Path:       Tests? n

 FEATURE OPTIONS
          LWC Reception? audix                       Coverage Msg Retrieval? n
         LWC Activation? n                                      Auto Answer? n
            CDR Privacy? n                                 Data Restriction? n
  Redirect Notification? n                           Call Waiting Indication? n
    Off Premise Station? n                       Att. Call Waiting Indication? n
      R Balance Network? n                          Distinctive Audible Alert? n
       Switchhook Flash? y                          Message Waiting Indicator: _

             AUDIX Name: AUDIXCL
    Message Server Name: ________                    Audible Message Waiting? n
```

Figure J-2. Example of a Station Screen (G3rV2)

2. Use the entries in the table below to complete the Station screen.

Table J-2. Station Screen Entries (G3r/R5r)

Field	Entry
Extension	A valid extension number of 3 to 5 digits that agrees with the dial plan. Each voice port needs a unique extension number. Obtain the extension from Worksheet B-5.
BCC	Bearer Capability Class is a display-only field set to **0** (default) for stations. **0** indicates voice or voice-grade data. this field is only displayed when the ISDN-PRI option is enabled on the switch System-Parameters Customer-Options screen.
Type	**ADXCL** for G3rV2-V4/R5/R6 **ADX16A** for G3rR7
Lock Messages	**n**
COR	A Class of Restriction for the voice port that reflects the desired restriction. The COR should provide security for the voice ports. Obtain the COR from Worksheet B-5.
Port	The analog port equipment location of the DEFINITY AUDIX TN568 circuit pack on the switch. Enter 7 characters (for example, 01A0501). Obtain the port number from Worksheet B-5. n The first two characters identify the cabinet (**01** to **22**;default is 1). n The next character identifies the carrier (**A**,**B**,**C**,**D**, or **E**). n The next two characters identify the slot number in the carrier (**01** to **18** for a single-carrier cabinet and **01** to **20** for multi-carrier cabinets). Enter the number of the second slot of the two slots that the DEFINITY AUDIX system occupies. The second slot is occupied by the TN568 circuit pack. n The last two characters identify the circuit number. Valid entries are **01** to **12**. Assign the first voice port to circuit 01, the second to circuit 02, etc.
Security Code	Leave this field blank.
COS	A Class of Service (COS) that allows access only to the features Call Forwarding All Calls and Data Privacy (indicated by **y**). All other features for the COS should be set to **n**. Obtain this from Worksheet B-5.
Name	**AUDIX *x*** where x equals the circuit number of the port, or enter any other name. Obtain the name from Worksheet B-5.
Coverage Path	Leave this field blank.

Continued on next page

Table J-2. Station Screen Entries (G3r/R5r) — *Continued*

Field	Entry
Tests?	**n**
LWC Reception?	**none**
LWC Activation?	**n**
CDR Privacy?	**n**
Redirect Notification?	**n**
Bridged Call Alerting (G3rV4 only)	**n**
Off Premise Station?	**n**
R Balance Network (G3rV1-V3 only)?	**n**
Switchhook Flash?	**y**
AUDIX Name	Name of the DEFINITY AUDIX system as it appears on the switch User-Defined Adjunct Names screen defined in Task 4-2 in Chapter 4.
Message Server Name	Leave this field blank.
Coverage Message Retrieval?	**n**
Auto Answer?	**n**
Data Restriction?	**n**
Call Waiting Indication?	**n**
Att. Call Waiting Indication?	**n**
Distinctive Audible Alert?	**n**
Message Waiting Indicator	Leave this field blank.
Audible Message Waiting?	**n**

3. Press ENTER to save the station.
4. Continue with Task J-3B.

Task J-3B: Duplicating the Station

1. Use the duplicate function of your administration tool to duplicate the first voice port created in Task J-3A.

   At the switch administration terminal, enter**duplicate station *extension***

   where *extension* is the extension of the first voice port.
2. Change the `Port` and `Name` field for each voice port purchased.
3. Press ENTER to save the new extensions.
4. To verify that the voice ports exist on the switch, enter the following command:

   list station *xxxxx* **count** *y*

   where XXXXX is the number of the first extension, and y is the number of voice ports you created.

   For example, list station 55555 count 8.

   NOTE:
   This command works only if the voice port extensions are in sequence (for example, 55555, 55556, 55557, and so on). If you created extensions that are not sequential,, use the **list station *extension*** command.

Task J-4: Assigning the Hunt Group

1. See Task 4-7 in Chapter 4 for the information to complete this section.

NOTE:
Enter only the ports purchased for the DEFINITY AUDIX system.

```
                                                          Page 2 of 6
                                 HUNT GROUP
Group Number: 10      Group Extension: 12000      Group Type: ucd

Group Member Assignments

   Ext     Name                  Ext        Name            Ext       Name
1: 12001 AUDIX 1            14: ____                   27: __
2: 12002 AUDIX 2            15: ____                   28: ____
3: 12003 AUDIX 3            16: ____                   29: ____
4: 12004 AUDIX 4            17: ____                   30: ____
5: 12005 AUDIX 5            18: ____                   31: ____
6: 12006 AUDIX 6            19: ____                   32: ____
7: 12007 AUDIX 7            20: ____                   33: ____
8: 12008 AUDIX 8            21: ____                   34: ____
9: ____                     22:  ___                   35: ____
10: ____                    23:  ___                   36: ____
11: ____                    24:  ___                   37: ____
12: ____                    25: __ _                   38: ____
13: ____                    26: _ __                   39: ____
                                                       40: ____
```

Figure J-3. Example Hunt Group Screen — Group Member Assignments (G3r)

2. Continue with “Assigning the Data Link” in Chapter 4.

NOTE:
Access a control-link version of this document to view the above task.

Abbreviations

A

AC
alternating current

ACD
automatic call distribution

ADAP
administration and data acquisition package

ADU
asynchronous data unit

ALT
assembly load and test

AMIS
Audio Messaging Interchange Specification

API
application programming interface

AUDIX
Audio Information Exchange

AWG
American wire gauge

B

BIOS
basic input/output system

bps
bits per second

BRI
basic rate interface

BSC
binary synchronous communications

BTU
British thermal unit

C

CCA
call classification analysis

CDH
call data handler process

CELP
code excited linear prediction

CIC
customer information center

CICS
customer information control system

CL
control link

CMC
Compact Modular Cabinet

CO
central office

COIN
central office implemented network

COM1
serial communications port 1

COM2
serial communications port 2

COR
class of restriction

COS
class of service

CPU
central processing unit

CSI
called subscriber information

CTS
clear to send

D

DAC
dial access code

DC
direct current

DCE
data communications equipment

DCIU
data communications interface unit

DCP
digital communications protocol

DCS
distributed communications system

DID
direct inward dialing

DIP
data interface process

DMA
direct memory access

DNIS
dialed number identification service

DOSS
Delivery Operations Support System

DS
display set

DSP
digital signal processor

DSU
data service unit

DTE
data terminal equipment

DTMF
dual tone multifrequency

DTR
data terminal ready

E

EIA
Electronic Industries Association

ESD
electrostatic discharge

ESS
electronic switching system

F

F
fahrenheit

FIFO
first-in first-out

FOOS
facility out of service

G

GBCS
Global Business Communications Systems

GOS
grade of service

H

Hz
hertz

I

IDI
isolating data interface

IMAPI
INTUITY messaging application programming interface

IMM
INTUITY Message Manager

INADS
initialization and administration system

I/O
input/output

IRQ
interrupt request

ISDN
integrated services digital network

IVC6
integrated voice CELP card (6 channels)

K

Kbps
kilobits per second

KB
kilobyte (1024 bytes)

kHz
kilohertz

L

LAN
local area network

LCD
liquid crystal display

LED
light-emitting diode

LWC
leave word calling

M

m
meter

MANOOS
manually out of service

MB
megabyte (one million bytes)

MCC
Multi-Carrier Cabinet

MHz
megahertz

MO
magneto-optical

modem
modulator/demodulator

MPDM
modular processor data module

ms
millisecond

MT
maintenance (Lucent INTUITY software component)

MTBF
mean time between failures

MWI
message-waiting indicator

N

NW
INTUITY AUDIX Digital Networking

O

OA&M
operations, administration, and maintenance

OS
operating system

P

PBX
private branch exchange

PC
power converter or personal computer

PDM
processor data module

PEC
price element code

PGATE
Processor Gateway

PI
Processor Interface

POST
power-on self test

ppm
parts per million

psi
pounds per square inch

R

RAM
random-access memory

REN
ringer equivalence number

ROM
read-only memory

RSC
Lucent's Remote Services Center

RTS
request to send

RTU
right to use

S

SCC
Single-Carrier Cabinet

SCSI
small computer systems interface

SID
switch integration device

SIMM
single in-line memory module

SMSI
simplified message service interface

SW
switch integration (Lucent INTUITY software component)

T

TDD
telecommunications device for the deaf

TDM
time division multiplex

T/R
tip/ring

TRIP
tip/ring input process

TSC
Lucent's Technical Services Center

TTY
teletypewriter

U

UCD
uniform call distribution

UPS
uninterruptible power supply

V

VM
INTUITY AUDIX Voice Messaging

VP
voice platform (INTUITY software component)

VR
INTUITY Intro Voice Response

VROP
voice response output process

Glossary

NUMERIC

10BaseT
A network baseband medium using twisted pair wire, operating at 10 Mbits per second.

A

Activity Menu
The list of main options voiced to subscribers when they access the DEFINITY AUDIX System.

Administration
The process of setting up a system (such as a switch or a voice mail system) so that it will function as desired. Options and defaults are normally set up (translated) by the system administrator or remote services personnel.

Alarm Board (ALB)
For release 3.2 and earlier releases, the hardware platform (TN2169 or TN2170) that works with the Multifunction board to provide monitoring for system power and environmental status, -48 VDC to +12 VDC power conversion for the system's disk and tape drives, and remote terminal access. The TN2170 also provides SCSI-to-Ethernet connectivity to support IMAPI.

Alarms
Hardware, software, or environmental problems that may affect system operation. These faults are classified as *major*, *minor*, or *warning*. They are recorded into an alarm log which can be accessed either locally or remotely on a terminal connected to the system.

Analog Port Emulation
One of the two port emulation modes that the DEFINITY AUDIX system may employ. The other mode is digital port board emulation. When emulating an analog port board (the TN746), only control link (CL) integration is possible.

Angel
A processor activity that exchanges TDM bus control messages and performs functions associated with call setup and port maintenance.

Announcement Fragment
A numbered piece of spoken voice mail information that makes up a system message or prompt.

Announcement Set
A set of audible menus the DEFINITY AUDIX system uses to prompt subscribers or callers for command choices.

Asynchronous Transmission
A form of serial communications where each transmitted character is bracketed with a start bit and one or two stop bits.

Asynchronous Data Unit (ADU)
A small device that can extend data transmission far beyond recommended Electronic Industries Association (EIA) limits over building wiring.

Audio Messaging Interchange Specification (AMIS)
An analog networking feature that allows subscribers of different voice mail systems to send voice mail messages to one another.

Audit
A software program that resolves filesystem incompatibilities and updates restored filesystems to a workable level of service. Audits are done automatically on a periodic basis; some can be performed on demand.

Audio Information Exchange (AUDIX)
A complete voice-mail messaging system accessed and operated by touch-tone telephones and integrated with a switch.

AUDIX Administration and Data Acquisition Package (ADAP)
A software package that allows the DEFINITY AUDIX administrator to transfer system subscriber, maintenance, or traffic data over the administration port to a personal computer (PC) or Work Group System (WGS).

Automated Attendant
A DEFINITY AUDIX feature that allows a customer to set up a main number with a menu of options that routes callers to an appropriate department at the touch of a button. Customers can set up multiple automated attendants to accommodate their business hours or holidays.

B

Backup
A duplicate copy of a filesystem saved on a MO disk. The backup filesystem may be copied back (restored) if the active version is damaged (corrupted) or lost.

Balun
On the DEFINITY AUDIX LAN connection, the adapter needed to connect the twisted-pair breakout cable to the coaxial building wire distribution system.

Baud
Transmission signaling rate.

Boot (or Reboot)
The operation to start a computer system by loading programs from disk to main memory (part of system initialization).

Boot Filesystem
The filesystem from which the system loads its initial programs.

Broadcast Messaging
A feature that enables the system administrator and other designated users to send a voice mail message to all subscribers automatically.

Buffer
Memory used to compensate for time differences in transmission by temporarily storing data.

Busyout Service
When a technician or administrator blocks service to keep customers from using faulty equipment until it can be repaired or tested. For instance, when ports (or a link) are busied out, subscribers who try to access their mailboxes hear a *fast busy* reorder tone. People who would normally reach DEFINITY AUDIX through Call Answering are not forwarded; they hear ringing and no answer at the number they called.

C

Call Answer
A feature that allows the system to answer a call and record a message when the subscriber is unavailable. Callers may be redirected to the system through the call coverage or Call Forwarding switch features. Subscribers may record a personal greeting for these callers.

Call Answer Language Choice
Call answer multilingual option where a user can alternate between a primary language set and a secondary language. The two languages are administered on a per subscriber basis. If this feature is enabled, the subscriber may not use the standard DEFINITY AUDIX Multiple Personal Greetings feature.

Camp-On
A system shutdown option that waits for ports to become idle before blocking service to them. This allows subscribers to finish calls in progress.

Central Office (CO)
A main telephone office where private customer lines are terminated and connected to the public network through common carriers.

Central Processing Unit (CPU)
The system's main processor that controls system data transfer, input/output (I/O), and logical instructions.

Class of Service (COS)
The standard set of features given to subscribers when they are first administered (set up with a voice mailbox).

Configuration
The particular composition and hardware selected for a system, including internal options and peripheral equipment.

Control Link (CL)
The integration, or interface, between the DEFINITY AUDIX System and the switch that enables the transmission of control messages from the DEFINITY AUDIX System to the switch over a DCIU data link. The control messages are transmitted over a separate cable connection and carry information such as calling-party identification and message-waiting indicator status and control.

Control Link Mode
The type of switch-link integration for which the DEFINITY AUDIX System, R2.0 or later, is connected to the switch via analog-line card emulation and a digital connection.

D

Delivery Operations Support System (DOSS) Configurator
Lucent Technologies' algorithmic system for configuring products for customers' specific needs.

Digital Communications Protocol (DCP)
An Lucent Technologies proprietary protocol for networking remote communication systems.

DCP Mode 1
A Lucent Technologies proprietary Digital Communications Protocol (DCP) connection using a data rate of 56 Kbps for AUDIX Digital Networking. DCP Mode 1 uses a DS1 facility on the switch or a dedicated facility on the switch or a dedicated facility on a T1 carrier.

DCP Mode 2
DCP Mode 2 is an asynchronous, low-speed (9600 bps) connection for AUDIX Digital Networking. DCP Mode 2 uses a modem/data module or modem/Asynchronous Data Unit (ADU) arrangement and connects over analog or voice-grade data lines. DCP Mode 2 Digital Networking connections are configured using EIA RS-232 Asynchronous protocol. These connections are sometimes called EIA RS-232 or RS-232 ASYNC connections.

DCP Mode 3
A DCP connection using a data rate of 64 Kbps for AUDIX Digital Networking. DCP Mode 3 uses a DS1 or ISDN facility on the switch or a dedicated facility on a T1 carrier.

Default
A value that is automatically supplied if no other value is specified.

Digital Port (DP) Emulation
The DEFINITY AUDIX system's method of operating within a switch as a digital port circuit pack—either a TN2181 or a TN754.

Digital Signal Processor (DSP)
Programmed RAM chips on the TN568 that provide signaling, power-level control, speech coding, and data processing.

Display Set (DS) Integration
A new term that replaces the term digital port integration for R3.2 and later. It refers to the use of the display and other messages sent from the switch to the port board for providing voice mail integration with the switch. Integration with the switch is achieved via display set messages. The messages carry information such as calling party identification and message waiting indicator status and control.

Disconnect Signaling Detection
Signaling from the CO to the PBX which indicates that the far end caller has hung up.

Dual Language Greetings
When the Call Answer Language Choice is in effect, the subscriber can record personalized greetings for each of the languages listed as the primary and secondary announcement sets. The subscriber instructs the caller to enter *1 to switch to the alternate language.

E

Errors
Problems detected by the system during automatic self-tests and recorded in an error log. Errors can produce an alarm (fault) if they exceed a threshold.

Events
Occurrences such as inline errors, maintenance procedure failures, alarms, errors, or transitions into or out of the AUDIX or OA&M states which are recorded in an events log.

F

Field
An area on a form, menu, or report where information can be typed or displayed.

Filesystems
A collection of related files (programs or data) stored on disk that are required to initialize a DEFINITY AUDIX System and provide full service.

Flashware
Code that is stored in electrically reprogrammable memory on the DEFINITY AUDIX System. This programming is retained over power outages but can be reprogrammed automatically on board during initialization.

Forms
Terminal screens of information that allow data to be displayed or changed.

G

Generic Disk
A copy of the standard software and standalone utilities that is shipped with a new system.

Graceful Shutdown
Taking the DEFINITY AUDIX System offline (to the maintenance shutdown state) using RESET SYSTEM SHUTDOWN in a camp-on manner.

Ground Isolation
Ground isolation prevents an alternate return current path at the connecting interface. Return currents pass through the signal wire(s) in the interface connector cable rather than via "green wire ground".

Guest Password
A feature that allows people who are not subscribers to leave messages on the system by dialing a subscriber’s extension and entering a system-wide guest password.

H

Hard Disk Drive
The disk drive the DEFINITY AUDIX system uses to actively save voice messages, personal greetings, subscriber profiles, automated attendants, and other data. The hard disk drive also stores the system's AUDIX software.

Header
Information that the system creates to identify a message. A message header includes the originator or recipient, type of message, creation time, and delivery time.

Hunt Group
A group of ports on a switch usually administered to search for available ports in a circular pattern.

I

Initialization
The process of bringing a system to a predetermined operational state. The start-up procedure tests hardware and flashware; loads the boot filesystem programs; locates, mounts, and opens other required filesystems; and starts normal service.

Initialization and Administration System (INADS)
A maintenance system used by remote technicians to track alarms.

INTUITY Message Manager
A personal computer application that is used for the retrieval and display of message headers, addressing to lists, managing personal greetings, and for creating, forwarding, and replying to voice mail messages.

L

Leave Word Calling
A switch feature that allows the calling party to leave a standard (nonvoice) message for the called party using a feature button or dial access code.

Light-emitting Diode (LED)
Release 4.0 uses three LEDs on the system's faceplate to report the system's status and to provide alarm and diagnostic information.

For Release 3.2 and earlier releases, a red-light indicator on the system faceplate panel that shows the status of operations and possible fault conditions. An unlit LED indicates a healthy system. When flashing, the LED indicates a software problem. When it is steadily lit, a hardware problem exists.

Liquid Crystal Display (LCD)
For release 3.2 and earlier releases, the 10-character alphanumeric display on the DEFINITY AUDIX faceplate panel that automatically shows status of the system including alarms.

Local Area Network (LAN)
A short distance data communications network used to link computers and peripheral devices under some form of standard control

Local Maintenance Terminal (LMT)
A display terminal located near the DEFINITY AUDIX System and the switch. It is temporarily attached to the DEFINITY AUDIX during an on-site service visit.

Login
A unique code used to gain approved access to a subscriber's voice mailbox or to a display terminal.

M

Magneto-optical (MO) Disk
The storage medium used by the magneto-optical disk drive to store backups and other information. MO disks are removable and rewritable.

Magneto-optical (MO) Disk Drive
The device used to store nightly and weekly backups of customer data, install new software releases, restore the system and remove core dumps and other maintenance information. The drive stores information on an MO disk.

Mailbox
A portion of disk memory given to each subscriber for creating and storing outgoing and incoming messages.

Message-waiting Indicator (MWI)
A device on a telephone, either a message-waiting lamp or a display screen, that alerts subscribers to new messages.

Message-waiting Lamp
An LED on a telephone that alerts subscribers to new messages.

Migration
The replacement of an old hardware or software release with a new one. Changes from DEFINTIY AUDIX system releases earlier than 4.0 to Release 4.0 are called *migrations*.

Modem
A modulator/demodulator used for transmitting analog signals across telephone lines.

Multifunction Board (MFB)
For release 3.2 and earlier releases, the hardware platform (TN566B, 386 version and TN567, 486 version) which holds the central processing unit, controllers, memory devices, and signal processors that make a DEFINITY AUDIX System operational. For release 4.0 the TN568 is the only circuit pack and therefore performs all operations for the DEFINITY AUDIX system.

Multilingual System
A DEFINITY AUDIX System containing primary and secondary language announcement sets. A large (40 hour) system will hold up to nine different language sets. The Telecommunications Device for the Deaf (TDD) announcement set is treated as a multilingual option.

N

Native Mode
The ability of the switch to recognize the DEFINITY AUDIX as a DEFINITY AUDIX circuit pack. With native mode support, the switch reserves one slot for the DEFINITY AUDIX system. Additionally, the switch is able to correctly identify the DEFINITY AUDIX board in alarms sent to the Remote Services Center (RSC).

Non-native Mode
Without native mode, the TN568 slot is provisioned as a TN754, TN2181 or TN746B. The second slot occupied by the DEFINITY AUDIX system Release 4.0 is not reserved, and alarms are reported as alarms for a TN754, TN2181, or TN746B.

Null Modem Cable
A cable that transposes transmit and receive leads on an RS-232 connection.

O

Operating System (OS)
The set of programs that runs hardware and interprets software commands.

Operations, Administration, and Maintenance (OA&M)
A state of system operation where core processes of the system are accessed, including system initialization, resource configuration, forms interface, entry into the maintenance subsystem, and filesystem access. Also entered when customer data must be restored.

Outcalling
A feature that allows the system to dial subscribers' numbers or go to pagers to inform them they have new messages.

P

Personal Greetings
Messages DEFINITY AUDIX subscribers create to greet callers when the subscribers are unavailable. Subscribers can change and administer personal greetings as necessary.

Port
A connection or link between two devices, allowing information to travel through it to a desired location. For example, a switch port connects to a DEFINITY AUDIX port to allow a subscriber on a voice terminal to leave a message.

Protocol
A set of specific rules, procedures, or conventions relating to forms and timing of data transmission between two devices.

R

Reboot
A system *reboot* is done to clear major system problems (such as corrupt program memory). It also runs automatically whenever the system is powered up. Also see *boot*.

Remote Field Update
A set of software changes on a given release that is transmitted from a central location to customer equipment. Changes are generally restricted to serious bug fixes and are limited in volume.

Reply Loop Escape
Allows the subscriber the option to return to responding to a message after trying to reply to a non-subscriber message.

Restart
During maintenance, a system *restart* brings the system software back into full service, usually after an administrative shutdown. This is often done to try to clear software problems.

RISC
Reduced Instruction Set Computer. Refers to computers based on an unusually high speed processing technology that uses a far simpler set of operating commands.

S

Sanity and Control Interface (SAKI)
An integrated circuit that receives and transmits TDM bus control messages and monitors the sanity of the angel processor.

Shutdown State
State of system operation where either a technician can shut down the system for maintenance, or where a critical error condition brings down the system. In either case, filesystems are closed and the system can be powered down and removed from the carrier.

Small Computer Systems Interface (SCSI)
An interface standard defining the physical, logical, and electrical connections to computer system peripherals such as the MO disk and hard disk drives.

Standalone Utility
A software utility with options that include disk drive initialization, copying files from a generic MO disk onto the customer's disk, and map partition modification.

Subscriber Specific Announcement Set
When the Multilingual feature is enabled, each subscriber form has three fields specifying the announcement set with which the subscriber will interact with the system once they log in, and the two announcement sets with which callers to the subscriber's mailbox can interact with the system.

T

Transmission Control Protocol/Internet Protocol (TCP/IP)
A set of protocol standards which allows a process on one machine to send data to a process on another machine. Communication may be full or half duplex. TCP/IP includes support for multiple operating systems and machine architectures.

Telecommunications Device for the Deaf (TDD)
A category of DEFINITY AUDIX features, including personal greetings and announcement sets, that exchange text messages with subscribers or callers using teletypewriters.

Teletypewriter (TTY)
A device that uses Baudot tones to transmit text-based telephone messages for the hearing impaired. Subscribers or callers can use teletypewriters to access the DEFINITY AUDIX system if TDD features are enabled.

Time Division Multiplex (TDM) Bus
The interface between the DEFINITY AUDIX System and the switch that carries digitally-encoded voice waveforms and circuit-switched data.

TN568 Circuit Pack
The circuit board that performs the main processing functions on DEFINITY AUDIX system Release 4.0.

U

Update
A limited incremental change on an existing release involving software only.

Upgrade
The replacement of one release with a new release. This may involve software, flashware, hardware, and/or data.

V

Voice Port
An electrical pathway that connects calls between two devices, such as telephones, switches, or voice messaging systems.

Index

Numerics

116A opto-isolator, 2-6
1st Skill field, 6-17
715 terminals, 3-1
7400A data modules, 2-21
7400D
  control link, 2-26
  option settings, H-11

A

AAR Digit Analysis, 9-17
AAS field, 6-13
Acceptable Service Level (sec) field
  EAS, 6-13
Acceptance tests
  add subscribers, 7-2
  Call Answer feature, 7-3
  clearing logs, 7-8
  DCS subscribers, 9-31
  LAN, 7-6
  MO disk, 7-4
  Voice Mail feature, 7-3
ACD field, 4-13, 9-29
  EAS, 6-13
Activating
  AMIS, C-2
  customer options, 3-3
Active Station Ringing field, 4-30
Active? field, 4-18, 4-20
  remote subscriber, 9-34
ADAP, 8-3
  administering, 8-5
  installing, 2-13
Adaptor cable
  connecting, 2-6, 2-9
  figure, 2-5
Adding language sets, G-3
Address ranges, C-5
Adjunct Name field, 4-51, 9-9
  Signaling Group screen, 9-21, 9-27
Adjunct names
  assigning, 4-10
  remote switch, 9-3
Adm'd NCA TSC Index field, 9-22
Administration
  activate basic features, 5-16
  activate parameters, 5-16
  add initial subscribers, 8-3
  add MO Disk, 5-18
  alarm origination, 10-1
  alarm status, 5-21
  assign machine ID, 5-6
  assign the time zone, 5-5
  clearing logs, 7-8
  completing, 8-5
  DEFINITY AUDIX, 5-2
    options, 3-1
  dual, 3-1
  initial, 5-1
  MO disk, 10-5
  overview, 4-4
  reboot, 5-14
  set clock, 5-2
  subscriber, 8-1
  switch, 4-1
  switch translations audit, 5-8
  switch-link, 5-10
  system parameter limits, 5-12
  terminal, 3-1
  voice ports, 4-20, 5-9
  walk-through, 10-5
ADUs
  terminal connection, 2-19
  worksheet, B-32
Agent Login ID, 6-8
  screen, 6-15
Alarm
  clearing logs, 7-8
  origination, 10-1
    configuring, 2-9
    switch, 2-11
    worksheet, C-13
  relay, 2-9
  status, 5-21
All? field, 4-18, 4-20
  remote subscriber, 9-34
Allow VDN Override? field, 6-17
AMIS Analog Networking, D-1
  worksheet, C-2
AMIS Analog Networking? field, 3-4
Announcement set identifiers, G-1
Appl field
  Processor Channel Assignment screen, 4-50
    DCS, 9-9
  Signaling Group screen, 9-21
    remote switch, 9-27
Application field
  ISDN TSC Gateway Channel Assignment screen, 9-22
  Packet Gateway Board screen, 4-41
  Processor Channel Assignment screen, 9-16
Applications Processor (AP), 4-47
As-needed Inactivity Time-out field, 9-20, 9-26
Assignment
  display button, 4-4
  feature button, 4-4
Associated Signaling field, 9-18, 9-24
Att. Call Waiting Indication field
  analog emulation, J-6

Audible Message Waiting field, 4-30
analog emulation, J-6
Audit
switch translations, 5-8
AUDIX Extension field
remote switch, 9-30
AUDIX Name field
Hunt Group screen, 4-16
remote switch, 9-31
Station screen, 4-30
analog emulation, J-6
VDN screen, 6-17
AUDIX state
LEDs, 2-8
AUDIX? field, 6-16
Auth Code field, 6-3
Auto Answer field, 4-29
analog emulation, J-6
Auto Select any Idle Appearance field, 4-29
Automated Attendant, 6-2, D-5
hunt group, 6-3
incoming trunk, 6-4
Listed Directory Number, 6-4
night service, 6-3
phantom station, 6-2
routing table, 6-4
substitute strategies, 6-5

B

Basic? field, Vector screen, 6-18
Baud Rate field, 4-44
BCC field, 4-28
analog emulation, J-5
Board Location field, 4-41
Bootup
installation, 2-2
LED sequence, 2-7
Bridged Call Alerting field, 4-29
analog emulation, J-6
Bridged call appearances, 4-32, F-27
Bulletin boards, D-8
Busy? field, 4-18, 4-20
remote subscriber, 9-34
Button assignments, 4-3
bridged appearances, F-26
Station screen
remote subscribers, 9-35
subscriber, 9-1
voice ports, 4-3, 4-32

C

Call answer
announcement sets, C-11
Call appearances
port 12, 4-31
ports 9-11, 4-32
Call coverage path
subscribers, 4-18, 9-33
remote, 9-34
voice ports, 4-16
Call forwarding
all calls, 6-3
Call Handling Preference field
EAS, 6-16
call vectoring, 6-8
Call Waiting Indication field
analog emulation, J-6
Calling Party Number to INTUITY AUDIX? field, 4-16
Calls Warning Port field, 4-14
Calls Warning Threshold field, 4-14
Carrier
configuration, A-1
figure, 4-7
restrictions, 2-4
CDR Privacy field, J-6
changing
emulation
analog to digital, I-1
integration
CL-analog to DS-digital, I-3
DS to CL, I-8
Channel A field, 9-12
Channel B field, 9-12
Channel interface, 5-11
Circuit packs
identifying, 4-6
screen, 4-7
analog emulation, J-2
TN568, 4-6, 4-9
analog emulation, J-3
TN577, 2-24
data link, 4-39
TN750 Announcement, 6-6
Class of Restriction (COR), 9-29
Announcements screen, 6-7
Data Module screen, 4-38, 4-43
defining, 4-20
Hunt Group screen, 4-14, 9-29
Station screen, 4-28
analog emulation, J-5
analog worksheet, B-11
digital worksheet, B-4

Class of Service (COS)
Announcement screen, 6-7
Data Module screen, 4-38
defining, 4-20, C-10
optimizing, 8-1
Station screen, 4-29
analog emulation, J-5
analog worksheet, B-11
digital port, B-4
Subscriber screen, 8-4
VDN screen, 6-17
Class of Service screen, 8-2
Clock administration
set, 5-2
switch, 5-20
CMS, 4-47
Code field, 4-9
analog emulation, J-3
Communication-Interface Links screen, 9-12
Components
missing, 1-4
required and optional, 1-3
Confidence checks, 7-1
Configuring the switch, 1-2
Connected Data Module field, 4-48
Connecting block, 1-6, 2-12
Connectivity diagrams, 1-3
control link, 1-5, 2-24
7400D, 2-27
DSUs, 2-26
IDI, 2-25
LAN, 1-6
terminals, 2-14
7400 data modules, 2-22
ADUs, 2-19
direct connection, 2-15
modem, 2-17
Connectivity, system adapter cable, 2-9
Controlling Adjunct field, EAS, 6-13
Control-link
cable installation, 2-24
configuration, 1-1
connection, 2-13
packet gateway/7400D, 2-26
packet gateway/DSU, 2-25
packet gateway/IDI, 2-24
diagram, 1-5
migration, F-1
COR, see Class of Restriction
COS, see Class of Service
Coverage Criteria field, 4-17, 4-19
remote subscriber, 9-34
Coverage Message Retrieval field
analog emulation, J-6
voice port, 4-29
Coverage Module field, 4-30
Coverage Path field
automated attendant, 6-3
Hunt Group screen, 4-14
remote switch, 9-29
Station screen, 4-29
remote subscribers, 9-35
subscriber, 9-1
station screen
analog emulation, J-5
Coverage Path Number field, 4-17, 4-19
remote subscriber, 9-34
Coverage paths
multiple, 6-8
screen, 4-17
remote switch, 9-33
subscriber, 4-18
subscriber, 4-19
voice port, 4-16
worksheet
analog port, B-11
digital port, B-3
Coverage Points field, 4-20
remote subscriber, 9-35
Customer acceptance tasks, 10-1
Customer options
activate, 3-3
worksheet, C-2
Customized fragments, G-1

D

Data Extension field
Processor Interface Data Module screen, 4-43
Station screen, 4-38
Data link
administration, 4-39
testing, 5-20
example values, 9-6
requirements, 4-39
testing, 5-20
Data Module field, 4-29
Data Restriction field, 4-30
analog emulation, J-6
Data Set Unit (DSU), 2-25
DCS
acceptance test, 9-31
administration, 9-2
data link, 4-47
DCS+, 9-13
example values, 9-14
Expert Agent Selection, 7-3
host switch, 9-15
ISDN data link, 9-13
ISDN-PRI D-channel, 9-2
remote switch, 9-7, 9-23

Remote switch
DCS, 9-2
switch number, 7-2
switch-link parameters, 5-11
test subscribers, 9-31
testing, 9-31
transparency, 9-7
trunk group, 9-17
voice communications, 9-23
X.25 data link, 9-2, 9-5
DCS Over ISDN PRI D-channel, 9-17
Definity
switch administration, 4-1
DEFINITY AUDIX
figure, 2-3
function keys, 3-2
group extension, B-7, B-14
installing, 2-5
login, 2-29, 5-2
queues, B-7, B-8
slot locations, 2-4
voice ports, B-3, B-11
extensions, B-22
DEFINITY AUDIX, server, 1-1
Definity switches, 4-1
Dest. Digits field, 9-21, 9-27
Destination Number field, 4-44, 4-48
Diagram
connectivity
CL integration, 1-5
LAN, 1-6
Digital networking
administering, 4-37
availability, 4-5
Direct Agent Skill field
EAS, 6-16
Direct Inward Dialing (DID), 6-8
Disp Client Redir field, 4-30
Display buttons, 4-34
assignments, 4-4
Display Language field, 4-30
Display Module field, 4-29
Display Set
configuration, 1-1
Distinctive Audible Alert field
analog emulation, J-6
Don't Answer? field, 4-18, 4-20
remote subscriber, 9-34
DSU, see Data Set Unit
DTE/DCE field, 4-44
Dual terminal administration, 3-1
Duplicating voice ports, 4-34

E

EAS, 6-8
EAS, see Expert Agent Selection
Emulation
changing analog to digital, I-1
Enable? field
Communication-Interface Links screen, 9-8, 9-10, 9-12
Enabled field, 4-48, 9-21, 9-27
Endpoint Type field, 4-44
Error Logging field, 4-44
Error logs, clearing, 7-8
Establish Connection? field, 4-44, 4-48
Establish field, 9-21, 9-27
Expected Call Handling Time (sec) field, 4-14
Expert Agent Selection, 6-8
Agent Login ID, 6-8
coverage path, 6-18
DCS network, 7-3
hunt group, 4-35
vector, 6-16
Vector Directory Number, 6-17
Exporting voice ports, F-4
Extension field
Announcement screen, 6-7
Group Member Assignments Entries screen, 4-37
Station screen, 4-28, J-5
VDN screen, 6-17
External cable type field, 4-41
External modem
connectivity diagram, 2-10
option settings, H-5

F

Feature buttons, 4-33
assignments, 4-4
Feature Module field, 4-30
First Announcement Delay field, 4-16, 6-7
First Announcement Extension field, 4-16, 6-7
Frame Size field, 4-46
Function Keys, DEFINITY AUDIX, 3-2

G

Group Extension field
automated attendant, 6-3
hunt group screen, 4-13, 4-37, 9-28
Group Name field
automated attendant, 6-3
Hunt Group screen, 4-13, 9-28

Group Number field
Hunt Group screen, 4-13, 9-28
group member assignments, 4-37
Signaling Group screen, 9-18, 9-24
Group Type field
automated attendant, 6-3
EAS, 6-13
Hunt Group screen, 4-13
group member assignments, 4-37
remote switch, 9-28

H

H.320 Conversion field, 4-30
Hard Disk
figure, 2-3, F-14
Hardware
assembly, installing, 2-2
connecting, 2-14
finalizing, 2-28
testing, 2-28
Highest PVC Logical Channel field, 4-44
Hop channel, 9-10
Hop Channel Assignment screen, 9-11
Hours of Voice Storage Purchased field, 3-4
Humidity requirements, 1-2
Hunt group
assigning
analog emulation, J-7
voice ports, 4-35
Automated Attendant, 6-3
creating, 4-11
expert agent selection, 6-8
Group Member Assignments, 4-36, I-15
analog port, J-8
night destination, 6-8
Recorded Announcement, 6-7
remote switch, 9-27, B-22
removing ports, I-13
screen, 4-11, I-14
EAS, 6-13
migration, F-5
remote switch, 9-30
subscriber coverage point, 4-18, 9-33
worksheet
analog port, B-14
digital port, B-6

I

Identification field, 4-48
Identifiers
announcement set, G-1
Identifying
cirucit pack, 4-6
IDI
control link, 2-24
Idle Appearance Preference field, 4-30
Idle Timer field, 4-46
IMAPI access? field, 8-2
IMAPI Voice File Transfer? field, 8-2
INADS, 10-1
Initialization string, 10-2
Installation
hardware, 2-1
hardware assembly, 2-2
new language sets, G-3
prerequisites, 1-1
printer, 2-28
safety, 1-3
site verification, 1-2
system assembly, 2-5
tasks, 2-1
terminals, 2-13
tools, 1-2
Integration
changing
CL-analog to DS-digital, I-3
DS-digital to CL digital, I-8
Interface Channel field
DCS administration, 9-9, 9-16
Processor Channel Assignment screen, 4-50
Interface ID field
Signaling Group Entries screen, 9-19, 9-25
Interface link
assigning, 4-47
Interface Link field
DCS administration, 9-16
Processor Channel Assignment screen, 4-50
Interface Links screen, 4-47
ISDN Call Disp field, 4-14, 9-29
ISDN TSC Gateway Channel, 9-21
ISDN TSC Gateway Channel Assignment screen, 9-21

J

Joint acceptance tests, 7-6

L

LAN
acceptance tests, 7-6
connecting block, 1-4
connection, 2-11
connectivity diagram, 1-6
system parameters, 5-13
testing, 7-7
Language sets, G-3
LDN
see Listed Directory Number (LDN)

LEDs
AUDIX state, 2-8
bootup sequence, 2-7, F-16
Level field, 6-16
Light Emitting Diodes, see LEDs
Link field
Hop Channel Assignment screen, 9-12
Interface Links screen, 4-48
Processor Interface Data Module screen, 4-44
Linkage field
Coverage Path screen
remote subscriber, 9-35
subscriber, 4-20
voice port, 4-18
multiple coverage paths, 6-8
List Configuration Screen, 2-31
Listed Directory Number (LDN), 6-8
Local Ext field, 9-21, 9-27
Local Port field, 4-51, 9-9, 9-17
Lock Messages field
Station screen, 4-28
analog emulation, J-5
Login, 5-15
DEFINITY AUDIX, 2-29, 5-2
LWC Activation field
Station screen, 4-29
analog emulation, J-6
remote subscriber, 9-35
subscriber, 9-1
LWC Reception field
EAS, 6-16
Hunt Group screen, 4-16
remote switch, 9-31
Station screen, 4-29
analog emulation, J-6
remote subscriber, 9-35
subscriber, 9-1

M

Machine
form, C-4
ID, 5-11, C-4
parameters, 5-6
MachineID field
Processor Channel Assignment screen, 4-51
DCS administration, 9-9, 9-17
Signaling Group screen, 9-21, 9-27
Max number of CA TSC field, 9-19, 9-25
Max number of NCA TSC field, 9-19, 9-25
Maximum Number of Digital Networking Ports field, 3-4
Maximum Number of IMAPI Sessions field, 3-4
Maximum Number of Voice Ports field, 3-4
Measured field, 6-13
VDN screen, 6-17
Message Center AUDIX Name field, 4-15
remote switch, 9-30
Message Center field, 4-15
DCS administration, 9-29, 9-30
EAS, 6-14
Message Delivery, D-1
Message Manager
Class of Service, 8-2, 8-4
connecting block, 1-4
connectivity, 1-6
requirements, 1-1
system parameters, 5-13
testing, 7-7
Message Server Name field
analog emulation, J-6
Message Waiting Indicator
Station screen
analog port, J-3
remote subscriber, 9-35
voice ports, 4-20
Message Waiting Indicator field
Station screen
analog emulation, J-6
Messaging Server Name field
Hunt Group screen, 4-16
remote switch, 9-31
Station screen, 4-30
Migrations, F-1
additional installation tasks, F-29
backing up data, F-7
backups, F-9
checklist, F-3
connecting tape drive, F-6
exporting voice ports, F-4
materials needed, F-2
Missing parts, 1-3
MO disk
adding, 5-18
status, 10-1, 10-4
testing, 7-4
MO Disk Test Results screen, 7-5
MO hard drive
figure, 2-3, F-14
Modems
administration terminal, 2-16
Initialization string, 10-2
option settings, H-5
MO-Disk screen, 5-19
Multilingual language set choice, C-11
Multilingual? field, 3-4, C-2
Multiple Call Handling field
EAS, 6-13
MWI see Message Waiting Indicator

N

Name field, 4-38
Announcements screen, 6-7
Circuit Pack screen, 4-10
analog emulation, J-3
Hunt Group screen, 4-37
Packet Gateway Board screen, 4-41
Processor Interface Data Module screen, 4-43
Station screen, 4-29
analog emulation, J-5
migration, F-26
VDN screen, 6-17
Vector screen, 6-18
Native mode, 4-4
Networking ports, 4-37
Next Path Number field
Coverage Path screen
remote subscriber, 9-35
subscriber, 4-20
switch recorded announcement, 6-8
voice port, 4-18
Night Destination field, 6-4
Night Service Destination field
Hunt Group screen, 4-14
remote switch, 9-29
Listed Directory Number, 6-8
Night Service field, 6-4
Number field
Vector screen, 6-18
Number of Outstanding Frames field, 4-46
Number of Outstanding Packets field, 4-46
Number of Rings field
Call Coverage Path screen
remote subscriber, 9-35
subscriber, 4-20
voice port, 4-18

O

Objective field
EAS, 6-14
Off Premise Station field
analog emulation, J-6
Option administration, 3-1
Option settings
7400A modem, H-10
7400B modem, H-10
7400D, H-11
modem, H-5
generic, H-7
Paradyne Comsphere
3810 and 3820, H-6
3910, H-6
terminal, H-1
US Robotics Sportster 33.6, H-5
Optional features, D-1
Opto-isolator, 2-6
Outcalling, 8-4
screen, D-9
Outcalling field, 8-2

P

Packet Gateway (PGATE) board
control link, 2-24
7400D, 2-26
DSUs, 2-25
data link, 4-39
Packet Gateway Board screen, 4-40
Parameters, activating, 5-16
Parts
missing, 1-3
required and optional, 1-3
PBX
carrier reconfiguration, A-1
Per Button Ring Control field, 4-29
Permanent Virtual Circuit field, 4-44
Phantom stations, 6-2
Point1 field, 4-18
Port
connections, 2-13
switch, 5-11
voice, 5-9
analog emulation worksheet, B-11
digital emulation worksheet, B-3
Port C connection, 2-9
Port configuration field, 4-41
Port Emulation Type field, 3-3, C-2
Port Extension field
EAS, 6-16
Port field, J-5
Announcement screen, 6-7
Processor Interface Data Module screen, 4-43
Station screen, 4-28
migration, F-26
Power warning, 2-2
Powering down the switch, 2-2
Prerequisites, 1-1
Primary D-channel field, 9-18, 9-24
Primary? field, 9-30

Printer installation, 2-28
Proc Chan field, 4-50
    ISDN Gateway, 9-16
    ISDN TSC Gateway, 9-22
    remote switch, 9-9
Processor channel, 4-48
    host switch, 9-15
    remote switch, 9-7
    testing, 5-20
Processor Channel Assignment screen, 9-6, 9-8, 9-15
Processor Interface
    data module
        screen, 4-43
Project review, 10-5
Prompting? field, Vector screen, 6-18
Protect field, 6-7

Q

Queue field, 6-3, 9-29
    Announcement screen, 6-7
    EAS, 6-13
    Hunt Group screen, 4-13, B-14
        remote switch, B-22
Queue Length field
    Announcement screen, 6-7
    Call Coverage Path screen, B-8
    Hunt Group screen, 4-14
Queues, B-14

R

R Balance Network field
    analog emulation, J-6
Rate field, 6-7
Reboot, 5-14, 10-2
Recorded Announcement, 6-6
    hunt group, 6-7
    screen, 6-6
Redirect Notification field, 4-29
    analog emulation, J-6
    Station screen
        remote subscribers, 9-35
        subscriber, 9-1
Redirect on No Answer (rings) field,EAS, 6-14
Redirect to VDN field, EAS, 6-14
Remote Access connection, 2-9
Remote Loop Around Test field
    Processor Interface Data Module
      screen, 4-44
Remote Port field, 4-51
    remote switch, 9-9
Remote Proc Chan field
    ISDN Gateway, 9-17
Remote switch
    adjunct names, 9-3
    administering, 9-2
    data connections, 9-5
    DCS+ data connections, 9-13
    DEFINITY AUDIX field correlations, 9-9
    enabling, 9-10, 9-12
    hop channel, 9-10
    hunt group, 9-27
    ISDN-PRI, 9-23
    processor channel, 9-7, 9-16
    signaling group, 9-17
    subscriber
        call coverage path, 9-33
        station, 9-35
    testing, 9-31
Requirements, general site, 1-2
Reset Timer field, 4-46
Restart Timer field, 4-46
Restrict Last Appearance field, 4-30, F-26
Retransmission Timer field, 4-46
Retry Attempt Counter field, 4-46

S

SAC/Go to Cover? field, 4-18, 4-20
    remote subscriber, 9-34
Safety considerations, 1-3
SAI Routing? field, 6-18
Screens
    DEFINITY AUDIX
        alarm report, 5-21
        audit results, 5-8
        change station, F-4
        class of service, 8-2
        date and time, 5-2
        DEFINITY AUDIX administration, F-7
        disk test results, 7-4
        LAN results, 7-6
        list configuration, 2-31
        machine, C-4
        machine profile, 5-6
        MO disk, 5-19
        MO disk test results, 7-5
        outcalling, D-9
        reset system OA&M, F-8, F-17
        reset system reboot, 5-14
        save nightly, F-9
        save voice, F-11
        save weekly, F-10, F-11
        status mo-disk, 10-4
        subscriber, 7-2, 8-4
            initial, 8-3
            test, 7-2
            worksheet, C-10

switch correlations, 4-51
switch link, C-5
switch time zone, 5-5
worksheet, C-7
switch-link DCIU-SCI, 5-10, 9-10
system-parameter limits, 5-12
system-parameters
customer-options, 3-3, 4-2, C-2, F-20
system-parameters features, 5-16, C-7
system-parameters IMAPI-options, 5-13, C-3
system-parameters maintenance, 10-1, 10-3
worksheet, C-13
test LAN results, 7-6
voice group, 5-9, F-22
switch
Agent LoginID, 6-15
call appearances, 4-30
circuit pack, 4-7
communication-interface links, 9-12
coverage path, 4-17, 9-33
data module, 4-41
digital networking, 4-38
date and time, 5-3
hunt group, 4-11
group member assignments, 4-36, F-28
interface links, 4-47
ISDN TSC gateway channel assignment, 9-21
packet gateway board, 4-40
processor channel assignment, 4-49, 9-6, 9-10
DEFINITY AUDIX
correlations, 4-51
host switch, 9-15
remote switch, 9-8
recorded announcements, 6-6
signaling group, 9-18, 9-23
station, 4-21
display buttons assignments, 4-33
feature buttons, 4-33
switch link DCIU-SCI, 8-5, 9-6
system parameters customer options, 6-9
user defined adjunct names, 9-3
system-parameters imapi-options, 5-13
system-parameters limits, C-6
Secondary D-channel field
host switch, 9-18
remote switch, 9-24
Security Code field
Hunt Group screen, 4-13
remote switch, 9-29
Station screen, 4-28
analog emulation, J-5
Select Last Used Appearance field, 4-30
Server, DEFINITY AUDIX, 1-1
Service Feature field, 9-20, 9-26
Sfx field, 4-9
analog emulation, J-3
Shutdown warning, 2-2
Sig Group field, 9-22
Signaling Group, 9-18, 9-23
host switch, 9-17
screen, 9-18, 9-23
Site requirements, 1-2
Skill field
EAS, 6-13, 6-16
Slot field, 4-9, J-3
Slots
DEFINITY AUDIX system, 2-4
restrictions, 2-4
worksheet, A-1
SMDR or CDR Privacy field, 4-29
Station/Group Status field, 4-18, 4-20
Coverage Path screen
remote subscriber, 9-34
Stations
administering, 4-20
digital worksheet, B-3
completing, 4-21
screens, 4-23
G3r/R5r, J-4
port 12, 4-23
Stations administering
analog worksheet, B-11
Status MO-Disk screen, 10-4
Subscriber
adding, C-10
administering, 8-1
DEFINITY AUDIX, 8-1
switch, B-7, B-14
call coverage path, 4-18
remote switch, 9-33
limits, C-6
remote, 8-4
remote switch, 9-33
screen, C-10
Subscriber Screen, 8-4
Supervisor Extension field
EAS, 6-13

Switch
AC-powered, 2-14
administration, 4-1
initial, B-1
link screen, C-5
link translations, C-5
recorded announcements, D-10
time zone screen, C-7
audits, 4-20
carrier, 4-7
compatible, 2-1
configuring, 1-2
data link, 5-20
link parameters, 5-10
measurement data, 6-8
native mode, 4-4
translations audit, 5-8
Switch Integration Type field, 3-3
Switch Link DCIU-SCI screen, 8-5, 9-6
Switch Number field, 8-5
Switched Virtual Circuit field, 4-44
Switchhook Flash field
analog emulation, J-6
System
administration, 5-2
LED states, 2-7
System adaptor cable
connecting, 2-6, 2-9
figure, 2-5
port connections, 2-13
System parameters
customer options screen, 6-9
features screen, C-7
Intuity Message Manager, 5-13
limits, 5-12
limits screen, C-6
maintenance screen, 10-1, 10-3, C-13

T

Tables
switch translation, 4-2
Temperature requirements, 1-2
Temporary Signaling Connections (TSC), 9-17
Terminals
7400A data module connection, 2-21
ADU connection, 2-19
configuring, E-1
direct connections, 2-14
dual administration, 3-1
emulation, 5-3
function keys, 3-2
installing, 2-13
modem connection, 2-16
option settings, H-1
Test
add subscribers, 7-2
alarm origination, 10-1
short, 10-5
call answer, 7-3
data link, 5-20
hardware, 2-28
mo-disk, 7-4
voice mail, 7-3
Test LAN Results screen, 7-6
Tests field
analog emulation, J-6
Time Warning Port field, 4-14
Time Warning Threshold field, 4-14
Time zones, 5-5, C-7
Time/date requests, 4-20
TN field
Hunt Group screen, 4-14
Station screen, 4-30
TN568
figure, 2-3, F-14
TN577
control link
7400D, 2-26
DSU, 2-25
IDI, 2-24
data link, 4-39
TN750, 6-6
Toll fraud, B-4
Transfer Into AUDIX, 6-5
Transfer Into Mailbox
transfer port, 4-29
Translation overview tables, 4-2
Trunk Brd field, 9-19, 9-25
Trunk Group for NCA TSC field, 9-19, 9-25
TSC Index field, 9-21, 9-26
Type field
Announcements screen, 6-7
Processor Interface Data Module screen, 4-43
Station screen
analog emulation, J-5
migration, F-26
station screen, 4-28

U

UDP Code, 9-17
Uniform Dial Plan code, 9-17
User Defined Adjunct Names screen, 9-3

V

VDN
    see Vector Directory Number
Vector, 6-16
    administering logic, 6-18
Vector Directory Number (VDN)
    Expert Agent Selection, 6-14
    extension, 6-17
    remote switch, 9-4
Vector field
    EAS, 6-13
    Hunt Group screen, 4-13
        remote switch, 9-29
Vector Number
    VDN screen, 6-17
Voice ports
    button assignments, 4-4
    decreasing, I-12
    DEFINITY AUDIX, 5-9
    feature buttons, 4-33
    field assignments, 4-2
    rules for administering, 4-21
    switch
        administering, 4-20
            rules, 4-21, J-3
        call appearance buttons, 4-30, 4-31
        call coverage path, 4-16
        display buttons, 4-33
        duplicating, 4-34
            analog port, J-7
        feature buttons, 4-33
        feature options, J-4
        Station screen, 4-21, J-4
            analog emulation, J-4
        worksheet, B-3, B-11
voice ports
    administering
        tasks, 4-6
    button assignments, 4-3
Voice trunks, 9-2

W

Walk-through, 10-5
Warning Port field, 4-14
Worksheets
    acceptance tests, 7-1
    call coverage path, B-10
    data link, B-16
    DCP Mode 2, B-32, B-33
        digital networking, B-35
    DCS
        call coverage path, B-24
        hunt group, B-21
            remote switch, B-22
        ISDN RSC Gateway, B-30
        ISDN Signaling Group, B-26, B-28
        networking ports, B-31
        processor channel
            BX.25 Signaling, B-20
            ISDN Gateway, B-25
    hardware installation, 2-1, 4-1
    hunt group
        analog emulation, B-13, B-14
        digital emulation, B-6
    station
        analog emulation, B-11
        digital emulation, B-3
    subscriber administration, 8-1
    system administration, 3-1, 5-1, 6-2

X

X.25, 9-2
    Data Module, 4-41
    protocol interface, 4-39
X.25 Extension field, 4-48