555-230-109
Issue 1
March, 1996

DEFINITY® Communications System Generic 3r (G3r)

Upgrades and Additions

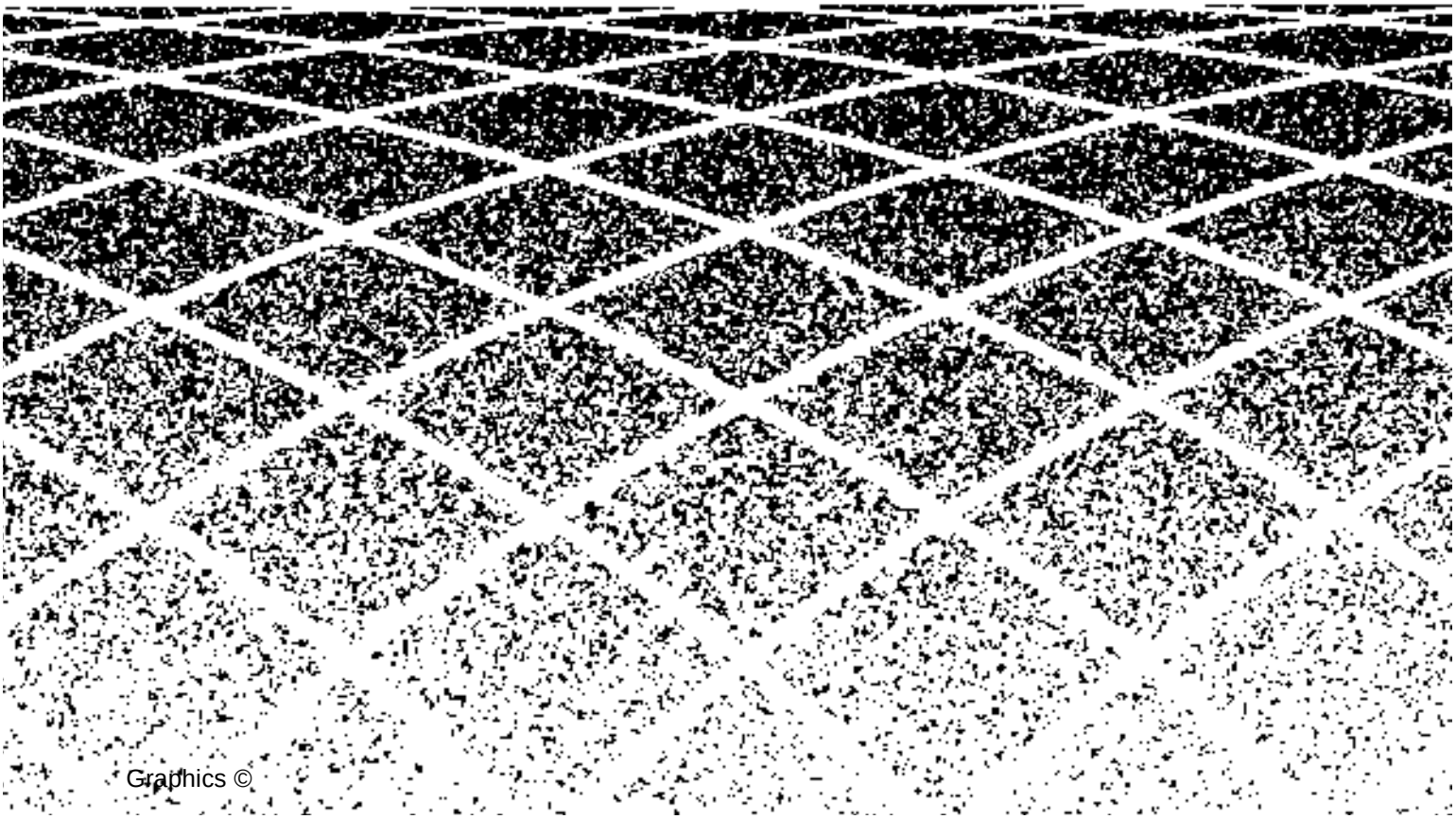

Blank Page

Contents

Table of Contents i

About This Document xxxix

- Purpose xxxix
- Conventions Used in This Document xlii

1 Single-Carrier R1V3 to G3r V4 1-1

- Considerations 1-3
  - Service Interruption 1-3
  - Communication between Equipment Rooms 1-3
  - Contact Network Technicians 1-3
  - Relocation of Port Circuit Packs 1-3
  - Usable Circuit-Pack Vintages 1-4
  - Power and Grounding 1-4
  - 116A Isolator 1-6
  - Power-Failure Stations 1-6
  - Software 1-6
  - Alarm Connections 1-8
- Software-Translation Upgrade 1-9
  - Save Translations 1-9
  - Make Source Tape for Upgrade 1-10
- System Upgrades 1-10
  - R1V3 System 75 XE to G3r V4 EPN 1-10
    - Upgrade Single-Carrier Cabinet Stack 1-11
    - Prerequisite Hardware 1-12
    - Required Tools 1-14
    - Preventive Maintenance 1-14
    - Verify System Status 1-14
    - Label Cables 1-14
    - Shut Down DEFINITY AUDIX System 1-14
    - Power Down System 1-15
    - Disconnect Power and Grounding 1-15

Contents

Install Power-Failure Transfer Ground Strap 1-15
Remove Door and Panels and Disconnect Cables 1-16
Remove Circuit Packs 1-16
Disconnect TDM Cables 1-17
Remove the Existing Control Cabinet 1-17
Unpack and Inspect Expansion Control Cabinet for Damage 1-18
Remove Front Door 1-18
Install Expansion Control Cabinet 1-19
Add Earthquake Protection 1-19
Install Port Cabinets 1-22
Install Circuit Packs 1-23
Install TDM/LAN Bus Terminators 1-25
Connect TDM/LAN Cables and ICC Cables 1-26
Interconnect Port Networks 1-29
With Standard Reliability 1-29
With High Reliability 1-29
With Critical Reliability 1-30
Connections with Standard Reliability (Adjacent Cabinets) 1-31
Connections with Standard Reliability (Remote Cabinets) 1-33
Connections with High Reliability (Adjacent Cabinets) 1-34
Connections with High Reliability (Remote Cabinets) 1-36
Connections with Critical Reliability (Adjacent Cabinets) 1-37
Connections with Critical Reliability (Remote Cabinets) 1-40
DS1C-Remoted Cabinets 1-42
Install Ground Plate(s) 1-47
Install Cabinet Clip(s) 1-49
Connect Power and Grounding 1-49
Verify Usable Circuit-Pack Vintages 1-49
Install System Access Ports 1-49
Reseat DEFINITY AUDIX System 1-53
Remove Power-Failure Ground Strap 1-53
Reboot the System 1-54
Relabel Wall Field 1-55

Contents

Close Upgraded EPN Stack without Earthquake Protection and Reconnect Cables 1-55
Close Upgraded EPN Stack with Earthquake Mounting and Reconnect Cables 1-55
Install Cable Clamps 1-58

Power Up the EPN Cabinets 1-58

Retranslate Port Circuits 1-58
Rerecord Announcements 1-59
Run Acceptance Tests 1-59

Register System as G3r V4 1-59

Return Replaced System 75 Equipment 1-59

2 Medium-Cabinet R1V3 to G3r V4 2-1

- Considerations 2-3
  - Service Interruption 2-3
  - Communication between Equipment Rooms 2-3
  - Contact Network Technicians 2-3
  - Relocation of Port Circuit Packs 2-3
  - Usable Circuit-Pack Vintages 2-4
  - Power and Grounding 2-4
  - 116A Isolator 2-6
  - Power-Failure Stations 2-6
  - Software 2-6
  - Alarm Connection 2-8
- Software-Translation Upgrade 2-9
  - Save Translations 2-9
  - Make Source Tape for Upgrade 2-10
- System Upgrades 2-11
  - R1V3 Medium to 2-Cabinet G3r V4 with Standard Reliability 2-11
    - Upgrade Cabinet 2-11
    - Prerequisite Hardware 2-12
    - Required Tools 2-13
    - Preventive Maintenance 2-14
    - Verify System Status 2-14
    - Label Cables 2-14

Contents

Shut Down DEFINITY AUDIX System 2-14
Power Down R1V3 System 2-15
Install Power-Failure Transfer Ground Strap 2-15
Remove Door and Panels and Disconnect Cables 2-15
Remove Circuit Packs from Control Carrier A 2-16
Remove Tape Drive 2-16
Remove Control Carrier A 2-17
Prepare New Expansion Control Carrier A 2-21
Install New Expansion Control Carrier A 2-22
Install Circuit Packs 2-27
Interconnect Port Networks 2-28
Collocated Port Networks 2-29
Fiber-Remoted Port Networks 2-30
DS1C-Remoted Port Networks 2-30
One Collocated Expansion Port Network 2-30
One Fiber-Remoted Expansion Port Network 2-32
DS1C-Remoted Cabinets 2-33
Verify Usable Circuit-Pack Vintages 2-38
Install System Access Ports 2-38
Reseat DEFINITY AUDIX System 2-41
Remove Power-Failure Ground Strap 2-41
Reboot the System 2-42
Relabel Wall Field 2-42
Close EPN Cabinet and Reconnect Cables 2-43
Power Up the EPN Cabinet 2-43
Retranslate Port Circuits 2-43
Rerecord Announcements 2-44
Run Acceptance Tests 2-44
Register System as G3r V4 2-44
Return Replaced System 75 Equipment 2-44
R1V3 Medium to 2-Cabinet G3r V4 with High Reliability 2-45
Upgrade Cabinet 2-45
Prerequisite Hardware 2-45
Required Tools 2-47
Preventive Maintenance 2-47
Verify System Status 2-48
Label Cables 2-48
Shut Down DEFINITY AUDIX System 2-48
Power Down R1V3 System 2-48
Install Power-Failure Transfer Ground Strap 2-48

Contents

Remove Door and Panels and Disconnect Cables 2-49
Remove Circuit Packs from Control Carrier A 2-49
Remove Tape Drive 2-50
Remove Control Carrier A 2-52
Prepare New Expansion Control Carrier A 2-55
Install New Expansion Control Carrier A 2-56
Install Circuit Packs 2-62
Interconnect Port Networks 2-63
Collocated Port Networks 2-64
Fiber-Remoted Port Networks 2-64
DS1C-Remoted Port Networks 2-64
One Collocated Expansion Port Network 2-65
One Fiber-Remoted Expansion Port Network 2-67
DS1C-Remoted Cabinets 2-68
Verify Usable Circuit-Pack Vintages 2-73
Install System Access Ports 2-73
Reseat DEFINITY AUDIX System 2-76
Remove Power-Failure Ground Strap 2-76
Reboot the System 2-77
Relabel Wall Field 2-78
Close EPN Cabinet and Reconnect Cables 2-78
Power Up the EPN Cabinet 2-78
Retranslate Port Circuits 2-78
Rerecord Announcements 2-79
Run Acceptance Tests 2-79
Register System as G3r V4 2-79
Return Replaced System 75 Equipment 2-79
R1V3 Medium to 2-Cabinet G3r V4 with Critical Reliability 2-80
Upgrade Cabinet 2-80
Prerequisite Hardware 2-80
Required Tools 2-82
Preventive Maintenance 2-82
Verify System Status 2-83
Label Cables 2-83
Shut Down DEFINITY AUDIX System 2-83
Power Down R1V3 System 2-83
Install Power-Failure Transfer Ground Strap 2-84
Remove Door and Panels and Disconnect Cables 2-84
Remove Circuit Packs from Carriers A and B 2-84
Remove Tape Drive 2-86

Contents

Remove Control Carrier A 2-87
Prepare New Expansion Control Carrier A 2-92
Install New Expansion Control Carrier A 2-92
Test the CURL 2-100
Install Circuit Packs 2-100
Interconnect Port Networks 2-101
- Collocated Port Networks 2-102
- Fiber-Remoted Port Networks 2-102
- DS1C-Remoted Port Networks 2-103
- One Collocated Expansion Port Network 2-103
- One Fiber-Remoted Expansion Port Network 2-105
- DS1C-Remoted Cabinets 2-107

Verify Usable Circuit-Pack Vintages 2-111
Install System Access Ports 2-111
Reseat DEFINITY AUDIX System 2-114
Remove Power-Failure Ground Strap 2-114
Reboot the System 2-114
Relabel Wall Field 2-115
Close EPN Cabinet and Reconnect Cables 2-116
Power Up the EPN Cabinet 2-116
Retranslate Port Circuits 2-116
Rerecord Announcements 2-117
Run Acceptance Tests 2-117
Register System as G3r V4 2-117
Return Replaced System 75 Equipment 2-117

3 Small Multicarrier R1V3 to G3r V4 3-1

- Considerations 3-3
  - Service Interruption 3-3
  - Communication between Equipment Rooms 3-3
  - Contact Network Technicians 3-3
  - Relocation of Port Circuit Packs 3-3
  - Usable Circuit-Pack Vintages 3-4
  - Power and Grounding 3-4
  - 116A Isolator 3-6
  - Power-Failure Stations 3-6
  - Software 3-6

Contents

Alarm Connections 3-7

- Software-Translation Upgrade 3-8

Save Translations 3-8

Make Source Tape for Upgrade 3-9

- System Upgrades 3-10

R1V3 Small to G3r V4 EPN with Standard Reliability 3-10

Cabinet Upgrade 3-10
Prerequisite Hardware 3-11
Required Tools 3-12
Preventive Maintenance 3-12
Verify System Status 3-13
Label Cables 3-13
Shut Down DEFINITY AUDIX System 3-13
Power Down System 3-13
Install Power-Failure Transfer Ground Strap 3-13
Remove Door and Panels and Disconnect Cables 3-14
Remove Circuit Packs from Carrier A 3-14
Remove Tape Drive 3-15
Remove Control Carrier A 3-16
Prepare New Expansion Control Carrier A 3-19
Install New Expansion Control Carrier A 3-20
Install Circuit Packs 3-25
Interconnect Port Networks 3-26

Collocated Port Networks 3-27

Fiber-Remoted Port Networks 3-27

DS1C-Remoted Port Networks 3-27

One Collocated Expansion Port Network 3-28

One Fiber-Remoted Expansion Port Network 3-30

DS1C-Remoted Cabinets 3-31

Verify Usable Circuit-Pack Vintages 3-37
Install System Access Ports 3-37
Reseat DEFINITY AUDIX System 3-40
Remove Power-Failure Ground Strap 3-40
Reboot the System 3-41
Relabel Wall Field 3-41
Close EPN Cabinet and Reconnect Cables 3-42
Power Up the EPN Cabinet 3-42
Retranslate Port Circuits 3-42
Rerecord Announcements 3-43
Run Acceptance Tests 3-43
Register System as G3r V4 3-43

Contents

Return Replaced System 75 Equipment 3-43

R1V3 Small to G3r V4 EPN with High Reliability 3-44

Cabinet Upgrade 3-44
Prerequisite Hardware 3-45
Required Tools 3-46
Preventive Maintenance 3-46
Verify System Status 3-47
Label Cables 3-47
Shut Down DEFINITY AUDIX System 3-47
Power Down System 3-47
Install Power-Failure Transfer Ground Strap 3-48
Remove Door and Panels and Disconnect Cables 3-48
Remove Circuit Packs from Carrier A 3-48
Remove Tape Drive 3-49
Remove Control Carrier A 3-51
Prepare New Expansion Control Carrier A 3-55
Install New Expansion Control Carrier A 3-55
Install Circuit Packs 3-60
Interconnect Port Networks 3-61

Collocated Port Networks 3-62

Fiber-Remoted Port Networks 3-62

DS1C-Remoted Port Networks 3-62

One Collocated Expansion Port Network 3-63

One Fiber-Remoted Expansion Port Network 3-65

DS1C-Remoted Cabinets 3-66

Verify Usable Circuit-Pack Vintages 3-72
Install System Access Ports 3-72
Reseat DEFINITY AUDIX System 3-75
Remove Power-Failure Ground Strap 3-75
Reboot the System 3-75
Relabel Wall Field 3-76
Close EPN Cabinet and Reconnect Cables 3-76
Power Up the EPN Cabinet 3-77
Retranslate Port Circuits 3-77
Rerecord Announcements 3-77
Run Acceptance Tests 3-78
Register System as G3r V4 3-78
Return Replaced System 75 Equipment 3-78

R1V3 Small to G3r V4 EPN with Critical Reliability 3-79

Cabinet Upgrade 3-79
Prerequisite Hardware 3-79
Required Tools 3-81

Contents

Preventive Maintenance 3-81
Verify System Status 3-81
Label Cables 3-81
Shut Down DEFINITY AUDIX System 3-82
Power Down System 3-82
Install Power-Failure Transfer Ground Strap 3-82
Remove Door and Panels and Disconnect Cables 3-83
Remove Circuit Packs from Carriers A and B 3-83
Remove Tape Drive 3-84
Remove Control Carrier A 3-86
Prepare New Expansion Control Carrier A 3-90
Install New Expansion Control Carrier A 3-90
Test the CURL 3-97
Install Circuit Packs 3-97
Interconnect Port Networks 3-99
- Collocated Port Networks 3-99
- Fiber-Remoted Port Networks 3-100
- DS1C-Remoted Port Networks 3-100
- One Collocated Expansion Port Network 3-101
- One Fiber-Remoted Expansion Port Network 3-104
- DS1C-Remoted Cabinets 3-107

Verify Usable Circuit-Pack Vintages 3-111
Install System Access Ports 3-111
Reseat DEFINITY AUDIX System 3-114
Remove Power-Failure Ground Strap 3-114
Reboot the System 3-115
Relabel Wall Field 3-116
Close EPN Cabinet and Reconnect Cables 3-116
Power Up the EPN Cabinet 3-116
Retranslate Port Circuits 3-117
Rerecord Announcements 3-117
Run Acceptance Tests 3-117
Register System as G3r V4 3-117
Return Replaced System 75 Equipment 3-118

4 Multicarrier G1 or G3i to G3r V4 4-1

- Considerations 4-2
  - Service Interruption 4-2
  - Communication between Equipment Rooms 4-2

Contents

Contact Network Technicians 4-2
Relocation of Port Circuit Packs 4-2
Usable Circuit-Pack Vintages 4-3
Site Inspections 4-3
Power and Grounding 4-4
116A Isolator 4-5
Power-Failure Stations 4-5
Software 4-6
ISDN Gateway 4-6
■ Software-Translation Upgrade 4-8
Save Translations 4-8
Make Source Tape for Upgrade 4-9
■ System Upgrades 4-10
Unduplicated G1 or G3i to Standard-Reliability G3r V4 4-10
Upgrade Cabinets 4-10
Prerequisite Hardware 4-11
Required Tools 4-12
Preventive Maintenance 4-12
Verify System Status 4-12
Label Cables 4-13
Shut Down DEFINITY AUDIX System 4-13
Power Down G1 or G3i System 4-13
Install Power-Failure Transfer Ground Strap 4-13
Remove Doors and Panels and Disconnect Cables 4-14
Remove Circuit Packs from Carrier A 4-15
Remove Control Carrier A 4-16
Prepare New Expansion Control Carrier A 4-20
Install New Expansion Control Carrier A 4-20
Install Circuit Packs 4-25
Interconnect Port Networks — Standard-Reliability System 4-27
Collocated Port Networks 4-27
Fiber-Remoted Port Networks 4-28
DS1C-Remoted Port Networks 4-29
For Either One or Two Collocated Expansion Port Networks 4-29
For Two Collocated Expansion Port Networks 4-30

Contents

For Either One or Two Fiber-Remoted Expansion Port Networks 4-33

For Two Fiber-Remoted Expansion Port Networks 4-34

For One to Fifteen Switch-Connected Expansion Port Networks 4-38

DS1C-Remoted Cabinets 4-40

Verify Usable Circuit-Pack Vintages 4-44
Install System Access Ports 4-44
Reseat DEFINITY AUDIX System 4-47
Remove Power-Failure Ground Strap 4-47
Reboot the System 4-48
Relabel Wall Field 4-49
Close Upgraded EPN Cabinet and Reconnect Cables 4-49
Power Up the EPN Cabinets 4-49
Retranslate Port Circuits 4-49
Rerecord Announcements 4-50
Run Acceptance Tests 4-50
Register System as G3r V4 4-50
Return Replaced G1 or G3i Equipment 4-50

Duplicated G1 or G3i to High-Reliability G3r V4 4-51

Upgrade Cabinets 4-51
Prerequisite Hardware 4-52
Required Tools 4-53
Preventive Maintenance 4-53
Verify System Status 4-53
Label Cables 4-53
Shut Down DEFINITY AUDIX System 4-54
Power Down G1 or G3i System 4-54

Install Power-Failure Transfer Ground Strap 4-54

Remove Doors and Panels and Disconnect Cables 4-55
Remove Circuit Packs from Carriers A and B 4-55
Remove Control Carriers A and B 4-56
Prepare the New A and B Position Carriers 4-61
Install the New A and B Position Carriers 4-61
Install Circuit Packs 4-66
Interconnect Port Networks — High-Reliability System 4-68

Collocated Port Networks 4-68

Fiber-Remoted Port Networks 4-69

DS1C-Remoted Port Networks 4-70

Contents

For Either One or Two Collocated Expansion Port Networks 4-70

For Two Collocated Expansion Port Networks 4-71

For Either One or Two Fiber-Remoted Expansion Port Networks 4-74

For Two Fiber-Remoted Expansion Port Networks 4-75

For One to Fifteen Switch-Connected Expansion Port Networks 4-80

DS1C-Remoted Cabinets 4-82

Verify Usable Circuit-Pack Vintages 4-86
Install System Access Ports 4-86
Reseat DEFINITY AUDIX System 4-89
Remove Power-Failure Ground Strap 4-89
Reboot the System 4-90
Relabel Wall Field 4-91
Close Upgraded EPN Cabinet and Reconnect Cables 4-91
Power Up the EPN Cabinets 4-91
Retranslate Port Circuits 4-91
Rerecord Announcements 4-92
Run Acceptance Tests 4-92
Register System as G3r V4 4-92
Return Replaced G1 or G3i Equipment 4-92

Duplicated G1 or G3i to Critical-Reliability G3r V4 4-93

Upgrade Cabinets 4-93
Prerequisite Hardware 4-94
Required Tools 4-96
Preventive Maintenance 4-96
Verify System Status 4-97
Label Cables 4-97
Shut Down DEFINITY AUDIX System 4-97
Power Down G1 or G3i System 4-97
Install Power-Failure Transfer Ground Strap 4-98
Remove Doors and Panels and Disconnect Cables 4-98
Remove Circuit Packs from Carriers A and B 4-98
Remove Control Carriers A and B 4-99
Prepare the New A and B Position Carriers 4-104
Install the New A and B Position Carriers 4-104
Test the CURL 4-111
Install Circuit Packs 4-111

Contents

Interconnect Port Networks — Critical-Reliability System 4-113

Collocated Port Networks 4-113

Fiber-Remoted Port Networks 4-114

DS1C-Remoted Port Networks 4-115

For Either One or Two Collocated Expansion Port Networks 4-116

For Two Collocated Expansion Port Networks 4-117

For Either One or Two Fiber-Remoted Expansion Port Networks 4-122

For Two Fiber-Remoted Expansion Port Networks 4-123

For One to Fifteen Switch-Connected Expan-sion Port Networks 4-128

DS1C-Remoted Cabinets 4-130

Verify Usable Circuit-Pack Vintages 4-135
Install System Access Ports 4-135
Reseat DEFINITY AUDIX System 4-138
Remove Power-Failure Ground Strap 4-138
Reboot the System 4-139
Relabel Wall Field 4-140
Close Upgraded EPN Cabinet and Reconnect Cables 4-140
Power Up the EPN Cabinets 4-140
Retranslate Port Circuits 4-140
Rerecord Announcements 4-141
Run Acceptance Tests 4-141
Register System as G3r V4 4-141
Return Replaced G1 or G3i Equipment 4-141

5 Single-Carrier Cabinet G1 or G3i to G3r V4 5-1

- Considerations 5-2

Service Interruption 5-2

Communication betweem Equipment Rooms 5-2

Contact Network Technicians 5-2

Relocation of Port Circuit Packs 5-2

Usable Circuit-Pack Vintages 5-3

Contents

Site Inspections 5-3
Power and Grounding 5-4
116A Isolator 5-5
Power-Failure Stations 5-5
Software 5-6
ISDN Gateway 5-6
■ Software-Translation Upgrade 5-8
Save Translations 5-8
Make Source Tape for Upgrade 5-9
■ System Upgrades 5-10
G1 or G3i to G3r V4 5-10
Upgrade Single-Carrier Cabinet Stack 5-10
Prerequisite Hardware 5-12
Required Tools 5-14
Preventive Maintenance 5-14
Verify System Status 5-14
Label Cables 5-14
Shut Down DEFINITY AUDIX System 5-14
Power Down System 5-15
Disconnect Power and Grounding 5-15
Install Power-Failure Transfer Ground Strap 5-15
Remove Door and Panels and Disconnect Cables 5-16
Remove Circuit Packs 5-16
Disconnect TDM/LAN Cables and ICC Cables 5-17
Remove the Existing Control Cabinet 5-17
Unpack and Inspect Expansion Control Cabinet for Damage 5-18
Remove Front Door 5-18
Install Expansion Control Cabinet 5-19
Add Earthquake Protection 5-19
Install Port Cabinets 5-22
Install Circuit Packs 5-23
Change Cabinet Address Plugs 5-25
Install TDM/LAN Bus Terminators 5-26
Connect TDM/LAN Cables and ICC Cables 5-27
Interconnect Port Networks — Standard-Reliability G3r V4 System 5-30
Collocated Port Networks 5-30
Fiber-Remoted Port Networks 5-31
DS1C-Remoted Port Networks 5-31

Contents

For One or Two Collocated Expansion Port Networks 5-32

For Two Collocated Expansion Port Networks 5-33

For One or Two Fiber-Remoted Expansion Port Networks 5-36

For Two Fiber-Remoted Expansion Port Networks 5-37

Interconnect Port Networks — High-Reliability G3r V4 System 5-41

Collocated Port Networks 5-41

Fiber-Remoted Port Networks 5-42

DS1C-Remoted Port Networks 5-43

For One or Two Collocated Expansion Port Networks 5-43

For Two Collocated Expansion Port Networks 5-44

For One or Two Fiber-Remoted Expansion Port Networks 5-47

For Two Fiber-Remoted Expansion Port Networks 5-48

Interconnect Port Networks — Critical-Reliability G3r V4 System 5-52

Collocated Port Networks 5-52

Fiber-Remoted Port Networks 5-53

DS1C-Remoted Port Networks 5-53

For One or Two Collocated Expansion Port Networks 5-54

For Two Collocated Expansion Port Networks 5-55

For One or Two Fiber-Remoted Expansion Port Networks 5-61

For Two Fiber-Remoted Expansion Port Networks 5-62

Switch-Connected Port Networks 5-68

DS1C-Remoted Cabinets 5-74

Install Ground Plate(s) 5-78
Install Cabinet Clip(s) 5-80
Connect Power and Grounding 5-80
Verify Usable Circuit-Pack Vintages 5-80
Install System Access Ports 5-80
Reseat DEFINITY AUDIX System 5-84

Contents

Remove Power-Failure Ground Strap 5-84
Reboot the System 5-85
Relabel Wall Field 5-86
Close Upgraded EPN Stack without Earthquake Protection and Reconnect Cables 5-86
Close Upgraded EPN Stack with Earthquake Mounting and Reconnect Cables 5-86
Install Cable Clamps 5-88
Power Up the EPN Cabinets 5-89
Retranslate Port Circuits 5-90
Rerecord Announcements 5-90
Run Acceptance Tests 5-90
Register System as G3r V4 5-90
Return Replaced G1 or G3i Equipment 5-91

6 Multicarrier G2 Universal Module to G3r V4 EPN 6-1

- Considerations 6-2
  - Service Interruption 6-2
  - Communication between Equipment Rooms 6-2
  - Contact Network Technicians 6-2
  - Relocation of Port Circuit Packs 6-2
  - Usable Circuit-Pack Vintages 6-2
  - Site Inspections 6-3
  - Power and Grounding 6-3
  - 116A Isolator 6-5
  - Power-Failure Stations 6-5
  - Software 6-5
  - Alarm Connection 6-6
- Software-Translation Upgrade 6-9
  - Save Translations 6-9
  - Make Source Tape for TRACS Report 6-10
- System Upgrades 6-10
  - Standard-Reliability G2 to Standard-Reliability G3r V4 6-11
    - Upgrade Cabinets 6-11
    - Prerequisite Hardware 6-11

Contents

Required Tools 6-13
Preventive Maintenance 6-13
Verify System Status 6-13
Label Cables 6-14
Power Down G2 System 6-14
Install Power-Failure Transfer Ground Strap 6-14
Remove Doors and Panels and Disconnect Cables 6-14
Remove Circuit Packs from Module Control Carrier A 6-15
Remove CURL from Module Control Carrier A 6-15
Remove Module Control Carrier A 6-16
Prepare New Expansion Control Carrier A 6-20
Install New Expansion Control Carrier A 6-20
Install Circuit Packs 6-25
Interconnect Port Networks — Standard-Reliability System 6-26
Collocated Port Networks 6-26
Fiber-Remoted Port Networks 6-27
DS1C-Remoted Port Networks 6-27
For One or Two Collocated Expansion Port Networks 6-28
For Two Collocated Expansion Port Networks 6-29
For One or Two Fiber-Remoted Expansion Port Networks 6-33
For Two Fiber-Remoted Expansion Port Networks 6-34
For One to Fifteen Switch-Connected Expansion Port Networks 6-38
DS1C-Remoted Cabinets 6-40
Verify Usable Circuit-Pack Vintages 6-44
Install System Access Ports 6-44
Remove Power-Failure Ground Strap 6-47
Boot the G3r V4 System 6-47
Close Upgraded EPN Cabinet and Reconnect Cables 6-48
Power Up the EPN Cabinets 6-49
Retranslate Port Circuits 6-49
Run Acceptance Tests 6-49
Register System as G3r V4 6-49
Return Replaced G2 Equipment 6-50
High-Reliability G2 to High-Reliability G3r V4 6-51

Contents

Upgrade Cabinets 6-51
Prerequisite Hardware 6-51
Required Tools 6-53
Preventive Maintenance 6-53
Verify System Status 6-53
Label Cables 6-53
Power Down G2 System 6-54
Install Power-Failure Transfer Ground Strap 6-54
Remove Doors and Panels and Disconnect Cables 6-54
Remove Circuit Packs from Module Control Carrier A 6-55
Remove CURL from Module Control Carrier A 6-55
Remove Module Control Carrier A 6-55
Prepare New Expansion Control Carrier A 6-60
Install New Expansion Control Carrier A 6-60
Install Circuit Packs 6-65
Interconnect Port Networks — High-Reliability System 6-66
Collocated Port Networks 6-66
Fiber-Remoted Port Networks 6-67
DS1C-Remoted Port Networks 6-67
For One or Two Collocated Expansion Port Networks 6-68
For Two Collocated Expansion Port Networks 6-69
For One or Two Collocated Expansion Port Networks 6-73
For Two Collocated Expansion Port Networks 6-74
For One to Fifteen Switch-Connected Expansion Port Networks 6-78
DS1C-Remoted Cabinets 6-80
Verify Usable Circuit-Pack Vintages 6-84
Install System Access Ports 6-84
Remove Power-Failure Ground Strap 6-87
Boot the G3r V4 System 6-87
Close Upgraded EPN Cabinet and Reconnect Cables 6-89
Power Up the EPN Cabinets 6-89
Retranslate Port Circuits 6-89
Run Acceptance Tests 6-90
Register System as G3r V4 6-90
Return Replaced G2 Equipment 6-90

Contents

Critical-Reliability G2 to Critical-Reliability G3r V4 6-91

Upgrade Cabinets 6-91
Prerequisite Hardware 6-91
Required Tools 6-93
Preventive Maintenance 6-93
Verify System Status 6-93
Label Cables 6-93
Power Down G2 System 6-94

Install Power-Failure Transfer Ground Strap 6-94

Remove Doors and Panels and Disconnect Cables 6-94
Remove Circuit Packs from Module Control Carriers A and B 6-95
Remove CURL from Module Control Carrier A 6-95
Remove Module Control Carriers A and B 6-96
Prepare the New A and B Position Carriers 6-101
Install the New A and B Position Carriers 6-101
Test the CURL 6-108
Install Circuit Packs 6-108
Interconnect Port Networks — Critical-Reliability System 6-110

Collocated Port Networks 6-110

Fiber-Remoted Port Networks 6-111

DS1C-Remoted Port Networks 6-112

For One or Two Collocated Expansion Port Networks 6-112

For Two Collocated Expansion Port Networks 6-114

For One or Two Fiber-Remoted Expansion Port Networks 6-118

For Two Fiber-Remoted Expansion Port Networks 6-120

For One to Fifteen Switch-Connected Expansion Port Networks 6-125

DS1C-Remoted Cabinets 6-128

Verify Usable Circuit-Pack Vintages 6-132
Install System Access Ports 6-132
Remove Power-Failure Ground Strap 6-135
Boot the G3r V4 System 6-135
Close Upgraded EPN Cabinet and Reconnect Cables 6-137
Power Up the EPN Cabinets 6-137

Contents

Retranslate Port Circuits 6-137
Run Acceptance Tests 6-138
Register System as G3r V4 6-138
Return Replaced G2 Equipment 6-138

7 Single-Carrier Cabinet G2 Universal Module to G3r V4 EPN 7-1

- Considerations 7-2
  - Service Interruption 7-2
  - Communication between Equipment Rooms 7-2
  - Contact Network Technicians 7-2
  - Relocation of Port Circuit Packs 7-2
  - Usable Circuit-Pack Vintages 7-2
  - Site Inspections 7-3
  - Power and Grounding 7-3
  - 116A Isolator 7-5
  - Power-Failure Stations 7-5
  - Software 7-5
  - Alarm Connection 7-6
- Software-Translation Upgrade 7-9
  - Save Translations 7-9
  - Make Source Tape for TRACS Report 7-10
- System Upgrades 7-10
  - G2 to G3r V4 7-11
    - Upgrade Single-Carrier Cabinet Stack 7-11
    - Prerequisite Hardware 7-12
    - Required Tools 7-14
    - Preventive Maintenance 7-14
    - Verify System Status 7-14
    - Label Cables 7-14
    - Power Down System 7-15
    - Disconnect Power and Grounding 7-15
    - Install Power-Failure Transfer Ground Strap 7-15
    - Remove Door and Panels and Disconnect Cables 7-15
    - Remove Circuit Packs 7-16
    - Disconnect TDM/LAN Cables 7-16

Contents

Remove the Existing Module Control Cabinet 7-17
Unpack and Inspect Expansion Control Cabinet for Damage 7-17
Remove Front Door 7-18
Install Expansion Control Cabinet 7-19
Add Earthquake Protection 7-19
Install Port Cabinets 7-22
Install Circuit Packs 7-23
Change Cabinet Address Plugs 7-25
Install TDM/LAN Bus Terminators 7-26
Connect TDM/LAN Cables and ICC Cables 7-26
Interconnect Port Networks — Standard-Reliability G3r V4 System 7-29
Collocated Port Networks 7-29
Fiber-Remoted Port Networks 7-30
DS1C-Remoted Port Networks 7-31
For One or Two Collocated Expansion Port Networks 7-31
For Two Collocated Expansion Port Networks 7-32
For One or Two Fiber-Remoted Expansion Port Networks 7-35
For Two Fiber-Remoted Expansion Port Networks 7-35
Interconnect Port Networks — High-Reliability G3r V4 System 7-39
Collocated Port Networks 7-40
Fiber-Remoted Port Networks 7-41
DS1C-Remoted Port Networks 7-42
For One or Two Collocated Expansion Port Networks 7-42
For Two Collocated Expansion Port Networks 7-43
For One or Two Fiber-Remoted Expansion Port Networks 7-46
For Two Fiber-Remoted Expansion Port Networks 7-46
Interconnect Port Networks — Critical-Reliability G3r V4 System 7-51
Collocated Port Networks 7-52
Fiber-Remoted Port Networks 7-52

Contents

DS1C-Remoted Port Networks 7-53

For One or Two Collocated Expansion Port Networks 7-53

For Two Collocated Expansion Port Networks 7-54

For One or Two Fiber-Remoted Expansion Port Networks 7-60

For Two Fiber-Remoted Expansion Port Networks 7-61

Switch-Connected Port Networks 7-66

DS1C-Remoted Cabinets 7-73

Install Ground Plate(s) 7-77
Install Cabinet Clip(s) 7-79
Connect Power and Grounding 7-79
Verify Usable Circuit-Pack Vintages 7-79
Install System Access Ports 7-79
Remove Power-Failure Ground Strap 7-84
Boot the G3r V4 System 7-84

For a Standard-Reliability G3r V4 7-85

For a High- or Critical-Reliability G3r V4 7-85

Close Upgraded EPN Stack without Earthquake Protection and Reconnect Cables 7-86
Close Upgraded EPN Stack with Earthquake Mounting and Reconnect Cables 7-86
Install Cable Clamps 7-88
Power Up the EPN Cabinets 7-88
Retranslate Port Circuits 7-88
Run Acceptance Tests 7-89
Register System as G3r V4 7-89
Return Replaced G2 Equipment 7-89

8 G3r V1 to G3r V1.1 or G3r V2 8-1

- Considerations 8-2
  - Service Interruption 8-2
  - Usable Circuit-Pack Vintages 8-2
    - Verify Tape EDIs Are Acceptable for Update or Upgrade 8-2
  - Software 8-3
- Circuit Packs 8-4

Contents

- Software-Translation Update or Upgrade 8-4
- System Updates and Upgrades 8-4

  Standard-Reliability G3r V1 to Standard-Reliability G3r V1.1 or G3r V2 8-4

  Prerequisite Hardware 8-5
  Required Tools 8-5
  Open PPN Cabinet's Door 8-5
  Verify System Status 8-5
  Save Current Translations to G3r V1 Tape 8-5
  Download Current Software and Translations to Disk and Reboot 8-6
  Administer the Updated or Upgraded System 8-7
  Save New Translations to Disk and Back Up Translations to Tape 8-8
  Verify Success of the Update or Upgrade 8-8
  Set the Core-Dump Vector 8-8
  Close Cabinet Door 8-8
  Run Acceptance Tests 8-8
  Register System as G3r V1.1 or G3r V2 8-8
  Return Replaced Equipment 8-8

  High- or Critical-Reliability G3r V1 to High- or Critical-Reliability G3r V1.1 or G3r V2 8-9

  Prerequisite Hardware 8-9
  Required Tools 8-9
  Open PPN Cabinet's Door 8-9
  Verify System Status 8-10
  Save Current Translations to G3r V1 Tapes 8-10
  Download Current Software and Translations to Disk and Reboot 8-10
  Verify State of Health of the SPEs 8-11
  Administer the Updated or Upgraded System 8-12
  Save New Translations to Disk and Back Up Translations to Tape 8-12
  Verify Success of the Update or Upgrade 8-12
  Set the Core-Dump Vector 8-13
  Close Cabinet Door 8-13
  Run Acceptance Tests 8-13
  Register System as G3r V1.1 or G3r V2 8-13
  Return Replaced Equipment 8-13

Contents

9 G3r V2 or V3 to G3r V4 9-1

- Considerations 9-3
  - Service Interruption 9-3
  - Changes to Run-Tape Compatible Update or Upgrade Procedures 9-3
  - Usable Circuit-Pack Vintages 9-3
  - Generic 3 — Management Applications (G3-MA) 9-3
  - Call Management System (CMS) 9-4
  - Software 9-4
- Circuit Packs 9-5
- Software-Translation Update or Upgrade 9-5
- System Updates and Upgrades 9-6
  - Standard-Reliability G3r V2 or V3 to Standard-Reliability G3r V4 9-6
    - Prerequisite Hardware 9-6
    - Required Tools 9-7
    - Open PPN Cabinet's Door 9-7
    - Verify System Status 9-7
    - Save Current Translations to G3r V2 or V3 Tape 9-7
    - Download Current Software and Translations to Disk and Reboot 9-8
    - Set the Core-Dump Vector 9-9
    - Administer the Updated or Upgraded System 9-9
    - Save New Translations to Disk and Back Up Translations to Tape 9-12
    - Verify Success of the Update or Upgrade 9-13
    - Back Up Translations to Spare Tape and Test 9-13
    - Close Cabinet Door 9-13
    - Run Acceptance Tests 9-13
    - Register System as G3r V4 9-14
    - Return Replaced Equipment 9-14
  - High- or Critical-Reliability G3r V2 or V3 to High- or Critical-Reliability G3r V4 9-14
    - Prerequisite Hardware 9-14
    - Required Tools 9-15
    - Open PPN Cabinet's Door 9-15
    - Verify System Status 9-15
    - Save Current Translations to G3r V2 or V3 Tapes 9-15
    - Download Current Software and Translations to Disk and Reboot 9-16
    - Verify State of Health of the SPEs 9-17

Contents

Set the Core-Dump Vector 9-18
Administer the Updated or Upgraded System 9-18
Save New Translations to Disk and Back Up Translations to Tape 9-21
Verify Success of the Update or Upgrade 9-21
Back Up Translations to Spare Tapes and Test 9-21
Close Cabinet Door 9-22
Run Acceptance Tests 9-22
Register System as G3r V4 9-22
Return Replaced Equipment 9-22

10 G3r Additions 10-1

- 1. Add Single-Carrier Cabinet EPN 10-1
- 2. Add Multicarrier Cabinet EPN 10-1
- 3. Split MCC G3r EPN into Two EPNs 10-2
  - Service Interruption 10-2
  - Verify System Status 10-2
  - Save Translations 10-2
  - Shut Down DEFINITY AUDIX System 10-3
  - Power Down Multicarrier EPN 10-3
  - Remove TDM/LAN Cable and Install Terminators 10-3
  - Reseat DEFINITY AUDIX System 10-4
  - Power Up Multicarrier EPN 10-4
  - Install Expansion Interface Circuit Packs 10-4
- 4. Add Auxiliary Cabinet 10-14
- 5. Add SCC Port Cabinets 10-14
  - Unpack and Inspect for Damage 10-14
  - Service Interruption 10-14
  - Verify System Status 10-14
  - Save Translations 10-15
  - Shut Down DEFINITY AUDIX System 10-15
  - Power Down Single-Carrier Cabinet EPN 10-16
  - Position Port Cabinets 10-19
  - Connect TDM/LAN Cables 10-19
  - Connect ICC Cables 10-24

Contents

Install Cabinet-Address Plug(s) 10-26
Install Ground Plates 10-27
Install Cabinet Clip(s) on Systems without Earthquake Protection 10-29
Install Earthquake Front Plates 10-30
Install Cable Clamps 10-32
Install Port Circuit Packs 10-32
Install Cables 10-32
Connect AC Power 10-32
Connect DC Power 10-33
Reseat DEFINITY AUDIX System 10-33
Power Up SCC EPN 10-33
Enter Added Translations 10-34
Save Translations 10-34

- 6. Add Control Carrier 10-35
  - Service Interruption 10-35
  - Verify System Status 10-35
  - Save Translations 10-35
  - Label Cables 10-35
  - Shut Down DEFINITY AUDIX System 10-36
  - Power Down Port Networks 10-36
  - Remove Doors and Panels and Disconnect Cables 10-36
  - Remove Circuit Packs from Port Carrier B 10-37
  - Remove Port Carrier B 10-37
  - Prepare New Control Carrier B 10-42
  - Install New Control Carrier B 10-42
  - Install Circuit Packs 10-48
  - Relocate Port Carrier B 10-49
  - Connect G3-MT to DOT Connector 10-49
  - Reseat DEFINITY AUDIX System 10-49
  - Power Up System 10-49
  - Enable SPE Duplication 10-50
  - Enable PNC Duplication 10-50
- 7. Add Switched Node Carrier 10-50
  - Service Interruption 10-50

Contents

Verify System Status 10-51
Save Translations 10-51
Shut Down DEFINITY AUDIX System 10-51
Power Down System 10-52
Remove Doors and Panels and Disconnect Cables 10-52
Remove Circuit Packs from Port Carrier D 10-52
Remove Port Carrier D 10-53
Prepare New Switched Node Carrier D 10-56
Install New Switch Node Carrier D 10-57
Install Circuit Packs 10-62
Relocate Port Carrier D 10-62
Interconnect Port Networks 10-62
Reseat DEFINITY AUDIX System 10-65
Power Up System 10-65
Enable PNC Duplication 10-66

- 8. Add MCC Port Carriers 10-66
  - Service Interruption 10-66
  - Verify System Status 10-66
  - Save Translations 10-66
  - Shut Down DEFINITY AUDIX System 10-67
  - Power Down MCC Port Network 10-67
  - Install Port Carrier 10-67
  - Reseat DEFINITY AUDIX System 10-69
  - Power Up MCC Port Network 10-70
  - Enter Added Translations 10-70
  - Save Translations 10-70
  - Update Port-Assignment Records 10-71
- 9. Add Circuit Packs 10-79
- 10. Add Attendant Console 10-95
  - Requirements 10-95
  - Phantom Power 10-95
  - Auxiliary Power 10-96
  - Installation 10-96
- 11. Add Selector Console 10-98
  - Requirements 10-98

Contents

Installation 10-98

■ 12. Add CO, FX, WATS, and PCOL 10-100

Requirements 10-100

Installation 10-100

■ 13. Add DID Trunks 10-101

Requirements 10-101

Installation 10-101

■ 14. Add Tie Trunks 10-102

Requirements 10-102

Installation 10-102

■ 15. Add DS1 Tie, CO, FX, WATS, and OPS 10-104

Service Interruption 10-104

Verify System Status 10-104

Save Translations 10-105

Shut Down DEFINITY AUDIX System 10-105

Power Down System 10-106

Add Circuit Packs 10-106

Install Cables 10-106

Reseat DEFINITY AUDIX System 10-106

Power Up System 10-107

Enter Added Translations 10-107

Save Translations 10-107

■ 16. Add Speech Synthesis 10-108

Requirements 10-108

Installation 10-108

■ 17. Add Code Calling Access 10-109

Requirements 10-109

Installation 10-109

■ 18. Add Pooled Modem 10-110

Requirements 10-110

Installation 10-110

■ 19. Add Off-Premises Terminals 10-111

Requirements — Off-Premises Terminals 10-111

Requirements — Out-of-Building Terminals 10-111

Installation 10-112

Contents

- 20. Add External Alerting 10-113
  - Requirements 10-113
  - Installation 10-113
- 21. Add Queue Warning Indicator 10-114
  - Requirements 10-114
  - Installation 10-114
- 22. Add Loudspeaker Paging Access 10-115
  - Requirements 10-115
  - Installation 10-115
- 23. Add Loudspeaker Paging with Music 10-117
  - Requirements 10-117
  - Installation 10-117
- 24. Add PagePac Paging System 10-118
  - Requirements 10-118
  - PagePac 20 10-118
  - PagePac VS 10-118
  - PagePac 50/100/200 10-118
  - Installation 10-119
- 25. Add Music-on-Hold Access 10-122
  - Requirements 10-122
  - Installation 10-122
- 26. Add Analog Recorded Announcement 10-126
  - Requirements 10-126
  - Installation 10-126
- 27. Add Integrated Recorded Announcement 10-129
  - Requirements 10-129
    - TN750C Announcement Board 10-130
  - Save and Restore Recorded Announcements 10-130
    - TN750 and TN750B Announcement Boards 10-131
  - Recommended Installation Procedures for G3 V4 Systems 10-132
    - Replace a TN750B with a TN750C or Move all Announcements from a TN750B to a TN750C 10-132
    - Add Additional TN750C Boards 10-133
    - Move a Single Announcement from One Announcement Board to Another 10-133

Contents

Recommended Installation Procedures for G3 V3 and Earlier Systems 10-134

Replace a TN750/B Board with a TN750C Board 10-134

New Integrated Announcement Commands 10-134

- 28. Add Recorded Telephone Dictation Access 10-135

Requirements 10-135

Installation 10-135

- 29. Add INADS Interface 10-138

Requirements 10-138

Installation 10-138

- 30. Add CDR Interface 10-139

Requirements 10-139

Installation 10-139

- 31. Add Emergency Transfer 10-140

Requirements 10-140

- 32. Add ISN Interface 10-141

Requirements 10-141

Installation 10-141

- 33. Add 3270 Data Module 10-142

Requirements 10-142

Installation 10-142

- 34. Add ISDN—PRI 10-143

North American 10-143

European 10-143

Add Circuit Packs 10-144

Install Cables 10-144

Enter Added Translations 10-144

Save Translations 10-144

- 35. Add CMS Interface 10-145

Requirements 10-145

Add Circuit Packs 10-145

Install Cables 10-145

Enter Added Translations 10-145

Save Translations 10-146

- 36. Add AUDIX Interface 10-147

Contents

Requirements 10-147
Add Circuit Packs 10-147
Install Cables 10-147
Enter Added Translations 10-147
Save Translations 10-148
- 37. Add DEFINITY AUDIX System 10-149
  Requirements 10-149
  Installation 10-149
- 38. Add PMS Access 10-151
  Requirements 10-151
  Installation 10-151
- 39. Replace Two 8-Port with 16-Port Analog Pack 10-152
  Requirements 10-152
  Installation 10-152
- 40. Add DCS Interface 10-154
  Add Circuit Packs 10-154
  Install Cables 10-155
  Enter Added Translations 10-155
  Save Translations 10-155
- 41. Add Customer-Provided Alarm 10-156
- 42. Add CallVisor ASAI 10-157
  Requirements 10-157
  Enter Added Translations 10-157
  Add Circuit Packs 10-157
  Install Cables 10-158
  Enter Added Translations 10-158
  Save Translations 10-158
- 43. Add Stratum 3 Clock 10-159
  Service Interruption 10-159
  Verify System Status 10-159
  Save Translations 10-159
  Shut Down DEFINITY AUDIX System 10-160
  Power Down PPN 10-160
  Install the Clock Unit 10-160
  Install Circuit Packs 10-160

Contents

Install Cables 10-161
Reseat DEFINITY AUDIX System 10-161
Power Up PPN 10-161
Enter Added Translations 10-161
Save Translations 10-162
■ 44. Add ISDN—BRI 10-163
Requirements 10-163
Add Circuit Packs 10-163
Install Cables 10-163
Enter Added Translations 10-163
Save Translations 10-164
■ 45. Add ISDN Voice Terminals 10-165
■ 46. Add G3-MT or G3MA 10-166
715 BCS Terminal 10-166
715 GBCS Terminal (2900/715) 10-166
715 GBCS-2 Terminal 10-166
■ 47. Add Wideband Switching 10-167
Configuration 10-167
Installation 10-168
Administration 10-168
■ 48. Add OVATION System 10-169
Configuration 10-169
Installation and Administration 10-170
■ 49. Add Greater Than Twenty-Second Port Network to G3r V3 System 10-171
■ 50. Add Third Switch Node to G3r V3 System 10-171
■ 51. Add 302B1 Attendant Console 10-172
Requirements 10-172
Hard-Wire Bridging 10-173
Dual Wiring of 2-Wire and 4-Wire Endpoints 10-173
Phantom Power 10-173
Auxiliary Power 10-174
Installation 10-175
Administration 10-176
■ 52. Add 8400-Series Voice Terminals 10-177

Contents

Requirements 10-177
Hard-Wire Bridging 10-177
Dual Wiring of 2-Wire and 4-Wire Endpoints 10-178
Auxiliary Power 10-178
Minimum Usable Vintage 10-178
Administration 10-179
Installation 10-180

- 53. Add CallMaster 603A, 603D, or 603E 10-181
  - Requirements 10-181
  - Hard-Wire Bridging 10-181
  - Dual Wiring of 2-Wire and 4-Wire Endpoints 10-182
  - Administration 10-182
  - Installation 10-183
- 54. Add TN1650B Memory Circuit Pack 10-183
  - Service Interruption 10-184
  - Verify System Status 10-184
  - Standard-Reliability System 10-184
    - Save Translations 10-184
    - Add the New Disk Drive 10-185
    - Shut Down DEFINITY AUDIX System 10-186
    - Power Down PPN 10-186
    - Install Memory Circuit Pack 10-187
    - Reseat DEFINITY AUDIX System 10-187
    - Reboot the System 10-187
    - Restore Announcements 10-187
    - Verify Success of Memory Board Addition 10-187
  - High- or Critical-Reliability System 10-188
    - Save Translations 10-188
    - Add the New Disk Drives 10-189
    - Add the New Memory Circuit Packs 10-191
    - Verify Success of Memory Board Addition 10-193
- 55. Add Integrated CSU Module 10-193
  - Installation 10-195
- 56. Add PassageWay Solution Interface 10-196
  - Interface Installation 10-197
    - Wiring 10-197
    - Auxiliary Power 10-197
    - Switch Administration 10-198

Contents

Installing the PassageWay Solution 10-198

- 57. Add Constellation Interface 10-199

Requirements 10-199

Installation 10-200

ISDN-PRI Interface to Cluster Controller 10-200
Cluster Controller 10-200
Constellation Terminals and DCP Voice Terminals 10-200

- 58. Add First Switch Node 10-201

Requirements 10-201

No Empty Carrier Position(s) at Central Location 10-201
Empty Carrier Position(s) at Central Location 10-202
Increased Capacity at Remote Location 10-202

Engineering Specifications 10-203

Presale Site Inspection 10-203

Traffic Considerations 10-203

Service Interruption 10-203

Verify System Status 10-203

Save Translations 10-204

Standard-Reliability System 10-205

Prerequisite Hardware 10-205
Remove Fiber Connections from System 10-207
Shut Down DEFINITY AUDIX and Install New SNC Carrier 10-209
Install New MCC Expansion Port Network 10-210
Translate SNC Carrier 10-210
Add Fiber Connections to System 10-210
Translate New Fiber Connections 10-213

Save Translations 10-213

Run Acceptance Tests 10-213

Removed Equipment 10-213

High-Reliability System 10-214

Prerequisite Hardware 10-214
Remove Fiber Connections from System 10-216
Shut Down DEFINITY AUDIX and Install New SNC Carrier 10-218
Install New MCC Expansion Port Network 10-219
Translate SNC Carrier 10-219
Add Fiber Connections to System 10-219
Translate New Fiber Connections 10-222

Contents

Save Translations 10-222

Run Acceptance Tests 10-222

Removed Equipment 10-222

Critical-Reliability System 10-223

Prerequisite Hardware 10-223

Remove PNC Duplication from System Translations 10-225

Remove Fiber Connections from System 10-225

Shut Down DEFINITY AUDIX and Install New SNC Carriers 10-228

Install New MCC Expansion Port Network 10-229

Add PNC Duplication to System Translations 10-230

Translate SNC Carriers 10-230

Add Fiber Connections to System 10-230

Translate New Fiber Connections 10-233

Save Translations 10-233

Run Acceptance Tests 10-233

Removed Equipment 10-233

- 59. Removing an EPN 10-234

11 Hardware Description 11-1

- Circuit Packs in DEFINITY 11-1

A References A-1

- Basic A-1
- Call Center A-6
- Networks A-7
- Application Specific A-7

Contents

ABB	**Abbreviations**	AB-1
GL	**Glossary**	GL-1
IN	**Index**	IN-1

About This Document

This book provides procedures and information for upgrading and updating an assortment of existing systems to a DEFINITY® Generic 3 Version 4 system. This book also contains instructions for adding equipment to an existing DEFINITY Generic 3 V4 system.

The following conventions are used to describe the systems referred to in this book: DEFINITY Communications System Generic 3vs, Generic 3s, Generic 3i, and Generic 3r are referred to as G3vs, G3s, G3i, and G3r.

Purpose

This book is intended for use by a trained installation technician.

For upgrades to the various G3 V4 systems, the following table correlates each software-upgrade PEC, and sometimes an associated hardware-upgrade PEC, to chapter numbers within this manual.

NOTE:
Software upgrades from G3 V4 Advantage to G3 V4 Premier (PECS 1264-402, 1264-405, and 1264-407) do not correlate to chapters in this book. Instead, *DEFINITY Communications System Generic 3 V4 Implementation*, 555-230-655, should be used for these translation-only upgrades.

CAUTION:
Increased login security is an attribute of the G3 V4 software, and is not discussed in previous manuals. Therefore, especially when using other manuals for a G3 V4 upgrade, remember to:

- *Advise customers that their existing passwords will expire 24 hours after the upgrade*
- *Explain the new passwords must conform to stricter requirements*

Table 1. G3 V4 Software- and Hardware-Upgrade PECS to Upgrade Chapters

PEC	Description	Chapter
1264-400, -401, or -402	G3vs V1 to G3vs V4 Upgrades	G3i 15, 16
	G3vs V2 to G3vs V4 Upgrades	G3i 16
	G3vs V3 to G3vs V4 Upgrades	G3i 16
1264-402	G3vs V4a to G3vs V4p (System parameters and translations only)	N/A
1264-403, -405, or -406	G3vs V1 to G3s V4 Upgrades	G3i 15, 16, 17
	G3vs V2 to G3s V4 Upgrades	G3i 16, 17
	G3vs V3 to G3s V4 Upgrades	G3i 16, 17
	G3vs V4 to G3s V4 Upgrades	G3i 17
1264-407 or -408	G3s V1 to G3s V4 Upgrades	G3i 19, 20
	G3s V2 to G3s V4 Upgrades	G3i 20
	G3s V3 to G3s V4 Upgrades	G3i 20
1264-407	G3s V4a to G3s V4p (System parameters and translations only)	N/A
1264-409	G3vs V1 to G3i V4 Upgrades	G3i 15, 16, 18
	G3vs V2 to G3i V4 Upgrades	G3i 16, 18
	G3vs V3 to G3i V4 Upgrades	G3i 16, 18
	G3vs V4 to G3i V4 Upgrades	G3i 18
	G3s V1 to G3i V4 Upgrades	G3i 19, 20, 21
	G3s V2 to G3i V4 Upgrades	G3i 20, 21
	G3s V3 to G3i V4 Upgrades	G3i 20, 21
	G3s V4 to G3i V4 Upgrades	G3i 21
1264-410	System 75 to G3i V4	
6300-C19	Small-Cabinet R1V3 to G3i V4 (new enhanced control carrier)	G3i 4
6300-X12	System 75 XE to G3i V4 (XE) (circuit-pack upgrade)	G3i 1
6300-159	Small-Cabinet R1V3 to G3i V4 (new PPN)	G3i 4
6300-359	Medium-Cabinet R1V3 to G3i V4 (new control carrier)	G3i 3
6300-412	System 75 XE to G3i V4 (new control cabinet)	G3i 2
6300-59X	Medium-Cabinet R1V3 to G3i V4 (new expansion control carrier and PPN)	G3i 3

Continued on next page

Table 1. G3 V4 Software- and Hardware-Upgrade PECS to Upgrade Chapters — *Continued*

PEC	Description	Chapter
1264-411	G3i V2 to G3i V4 Upgrades	G3i 12
	G3i V3 to G3i V4 Upgrades	G3i 12
63343	G3i V2 (XE) to G3i V4	G3i 12, 22
63343	G3i V3 (XE) to G3i V4	G3i 12, 22
	G3i V2 (XE) to G3i V4 (XE) Upgrades	G3i 12
	G3i V3 (XE) to G3i V4 (XE) Upgrades	G3i 12
63343	G3i V4 (XE) to G3i V4 Upgrade	G3i 22
1264-413	G2 to G3i V4 Upgrades (EPN upgrade, new G3r V4 PPN)	
	MCC cabinet	G3i 7
	SCC cabinet	G3i 8
1264-415	System 75 to G3r V4 Upgrades (EPN upgrade, new G3r V4 PPN)	
63540A	Medium cabinet	G3r 2
63541A	XE cabinet	G3r 1
63543A	Small cabinet	G3r 3
1264-415 or -416	G1 or G3i to G3r V4 Upgrades (EPN upgrade, new G3r V4 PPN)	
63540A or 63544A	MCC cabinet	G3r 4
63541A or 63545A	SCC cabinet	G3r 5
1264-418	G2 to G3r V4 Upgrades (EPN upgrade, new G3r V4 PPN)	
	MCC cabinet	G3r 6
	SCC cabinet	G3r 7
1264-419	G3r V1 to G3r V4 Upgrades	G3r 8, 9
	G3r V2 to G3r V4	G3r 9
	G3r V3 to G3r V4	G3r 9
1264-420	G1 to G3i V4 Upgrades	
	MCC cabinet	G3i 5, 10
	SCC cabinet	G3i 6, 11
	G3i V1 or G3i - Global to G3i V4 Upgrades	
	MCC cabinet	G3i 10
	SCC cabinet	G3i 11
	G3i V1.1 to G3i V4 Upgrades	
	MCC cabinet	G3i 13
	SCC cabinet	G3i 14

As supplemental information, the following documents are required to perform upgrades and additions to Generic 3 Version 4 systems:

- *GBCS Products Security Handbook*, 555-025-600, Issue 3
- *DEFINITY Communications System Generic 3 V1.1 and V2 Upgrades and Generic 3 Additions*, 555-230-107
- *DEFINITY Communications System Generic 3 V3 to Generic 3 V4 Transition Reference*, 555-230-636
- *DEFINITY Communications System Generic 3r Transition Reference*, 555-230-620
- *DEFINITY Communications System Generic 1 and Generic 3 Installation and Test*, 555-230-104, Issue 5
- *DEFINITY Communications System Generic 3 V4 Implementation*, 555-230-655
- *DEFINITY Communications System Generic 1, Generic 3i, Generic 3i-Global, and Generic 3i V4 Maintenance*, 555-204-105, Issue 7
- *DEFINITY Communications System Generic 3r V1 and V2 Maintenance*, 555-230-105, Issue 4
- *DEFINITY Communications System Generic 3 System Description and Specifications*, 555-230-206, Issue 3
- *DEFINITY Communications System and System 75 and System 85 Terminals and Adjuncts*, 555-015-201, Issue 5
- *LINEAGE. 2000 Standby Power Systems, Product Manual*, 555-790-110 (required for DC-powered switches)

Additional DEFINITY Communications System documentation can be found in Appendix A of this book.

Conventions Used in This Document

This manual uses the following conventions:

- Information you type is shown in the following typeface:

  `save announcements`

- Information displayed on the screen is shown in the following typeface: `login:`
- Keyboard keys are shown as follows: [RETURN].
- Circuit-pack codes (for example, TN772, CFY1, or TN786B) are shown with the *minimum acceptable* alphabetic suffix (like the ‘‘B’’ in the code ‘‘TN786B’’).

Generally, an alphabetic suffix higher than the one shown is also acceptable. However, not every *vintage* of either the minimum-suffix or a higher-suffix code is necessarily acceptable.

NOTE:
Refer to *Technical Monthly: Reference Guide for Circuit-Pack Vintages and Change Notices*, for current information about the usable vintages of specific circuit-pack codes (including the suffix) in a G3 system.

Single-Carrier R1V3 to G3r V4

1

This chapter provides the information necessary to upgrade an R1V3 System 75 XE system to a DEFINITY® G3r V4 with a single-carrier cabinet EPN. The hardware and software involved in the upgrades and the upgrade procedures are also provided.

CAUTION:
Be careful to find the right chapter for your upgrade. Using the software- and sometimes the hardware-upgrade PEC on the customer's order, refer to Table 1 in "About This Document" for the correct chapter.

Like upgrades to G1, any new cabinets, shipped by the factory to fulfill the upgrade order, are the new "DEFINITY style" of multicarrier or single-carrier cabinets. Whereas, the R1V3 single-carrier cabinets to be upgraded are old-style cabinets. Although the new G3r V4 cabinet(s) and the upgraded G3r V4 cabinets will look different, they can be used together.

The following processes are required for a Version 3 to G3r V4 upgrade:

- Upgrading the hardware

  This involves adding a new multicarrier PPN cabinet, replacing the single-carrier control cabinet with an expansion control cabinet, and replacing and adding circuit packs

- Replacing the software tape
- Upgrading the software

  This involves saving, loading, and (when necessary) reentering system translations (See Table 1-1).

- Testing the upgraded system to verify proper operation

G3r V4 features and functions are listed in the *DEFINITY Communications System Generic 3 Feature Description*, 555-230-204. *DEFINITY Communication System Generic 3 V4 Implementation*, 555-230-655, provides the commands, procedures, and forms required to initialize and administer the G3r V4.

Considerations

Service Interruption

The upgrade process requires a service interruption. This service interruption must be closely coordinated with the customer and the local account team.

Communication between Equipment Rooms

For an upgrade where some of the equipment resides at a remote location, the upgrade activity will be much easier if temporary communications are established between the equipment rooms.

Contact Network Technicians

The technician for each public and private network accessed by the switch must be contacted before the upgrade begins. Otherwise, if these technicians are not aware of the service interruption caused by the upgrade, it is possible that network-access trunk facilities will be busied out at the far end.

Relocation of Port Circuit Packs

A System 75 XE upgrade to G3r V4 *does not* cause port circuit packs, from the R1V3 control cabinet, to be moved and manually retranslated. This is because a System 75 XE is always upgraded to an EPN. So, during the upgrade to a G3r V4 EPN, a G3r V4 expansion control cabinet (with 14 to 16 available port slots) always replaces the R1V3 control cabinet (with 13 available port slots), providing a net gain of from 1 to 3 port slots. However, a circuit pack could be displaced from A01/A02 for TN570 circuit packs.

See NOTE. For an upgrade to a critical-reliability G3r V4, if a port circuit pack resides in slot ‘‘02’’ of port cabinet ‘‘B,’’ the STS software upgrade will retranslate this circuit pack to occupy an empty port slot in the new expansion control cabinet.

Also, to provide maximum holdover for a TN750/B Announcement circuit pack that did not reside in the control carrier of the R1V3 system, the STS software upgrade will relocate this circuit pack to occupy another empty port slot in the new expansion control cabinet.

Also, to ensure reliable DS1 timing in the upgraded G3r V4 system, the STS software upgrade will relocate the DS1 circuit packs serving as the primary and secondary timing sources to occupy two empty port slots in the new multicarrier PPN.

Finally, when adjuncts are connected to an upgraded G3r V4, STS will locate any new interface circuit packs (including TN577 Packet Gateway, TN553 Packet Data, and TN726B Data Line) in the first available slots of the first PPN port carrier.

NOTE:
To find out where STS relocated these circuit packs, refer to the annotated "display circuit x" that STS provided with the new G3r V4 tape.

Usable Circuit-Pack Vintages

Every circuit pack used in the upgraded G3r V4 system must conform to the minimum usable vintage requirements for G3r V4. Those circuit packs shipped in the new G3r V4 PPN or shipped loose with the new EPN equipment should always meet the usable vintage specifications. In addition, at a presale site inspection, the Quality Protection Plan Change Notice (QPPCN) process must check the vintages of every R1V3 circuit pack that will be reused in the upgraded G3r V4 and, if necessary, replace those circuit packs that have unusable vintages. Refer to *Technical Monthly*, Reference Guide for Circuit-Pack Vintages and Change Notices, for current information about usable vintages in a G3r V4 system.

Power and Grounding

The new multicarrier PPN cabinet or any EPN cabinet added for the upgrade can be either AC- or DC-powered. If an added cabinet is powered differently from an existing cabinet, the existing cabinet does not have to be converted since mixed power configurations are allowed. However, the system's power and grounding must be modified so that the AC-powered cabinet is grounded to the same single-point ground bar as the DC-powered cabinet (see Figure 1-1).

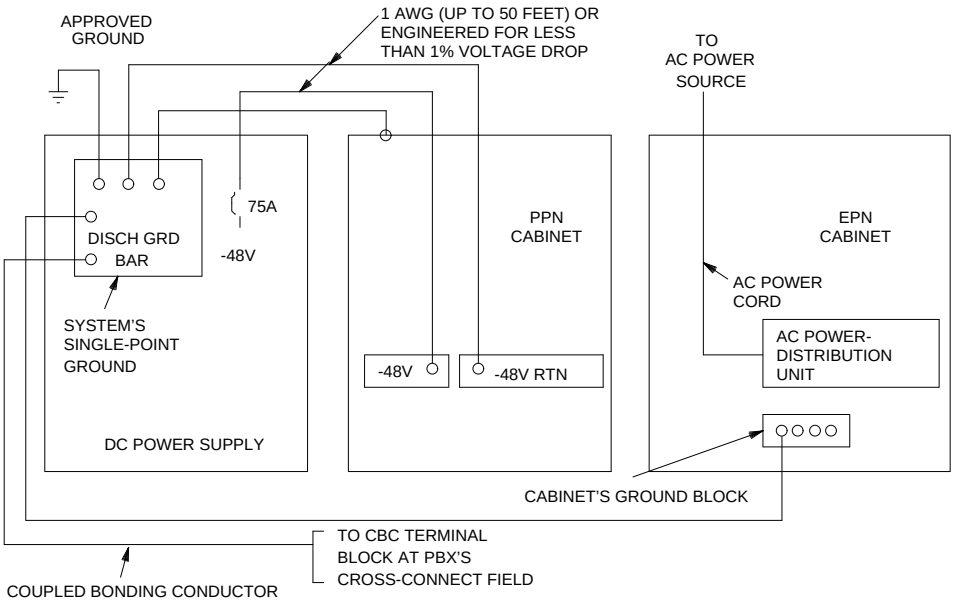

Figure 1-1. Typical Power and Grounding Arrangement for a Mixed AC/DC-Powered Multicabinet Configuration

See NOTE. If a new AC-powered cabinet is to be added, a separate AC receptacle is provided to support the new cabinet. This AC receptacle must not be shared with any other equipment and must not be controlled by a wall switch. For the convenience and safety of equipment-room personnel, the receptacle should not be located under the cross-connect field. Any available power source can be used as long as the phase or leg provides 115 VAC at the required drain.

NOTE:
In contrast to the AC power that is likely to be currently available in an R1V3 equipment room, the new AC-powered PPN added for a G3r V4 upgrade uses 4-wire, 30A, 208 VAC power. Whereas, each cabinet in an R1V3 stack used 3-wire, 15 or 20A, 115 VAC power.

If a new DC-powered cabinet is to be added, refer to *DEFINITY Communications System Generic 1 and Generic 3 Installation and Test*, 555-230-104, Issue 5, for DC power and grounding requirements.

116A Isolator

Each G3-MT connected to a DC-powered cabinet, via the asynchronous Electronic Industries Association (EIA) RS-232 interface (behind a PPN control carrier or behind an EPN expansion control carrier), requires a 116A isolator.

The isolator is inserted at the RS-232 interface between the G3-MT and the interface connector to isolate grounding between the system and external adjuncts.

Power-Failure Stations

During routine switch operation, the ground for the power-failure stations is derived from the system's auxiliary cable. This ground will be disconnected during the upgrade, thus disabling the power-failure stations. Therefore, a ground strap will have to be run to the power-failure transfer panel. This strap should be connected shortly after power is removed and then disconnected just before power is restored to the upgraded system.

To minimize downtime during the G3r V4 upgrade, power-failure transfer equipment should be tested and, if need be, repaired before the hardware upgrade begins.

Software

The G3r V4 system software and translations will be saved on the TN1656 Tape Drive circuit pack. This tape format is not compatible with the R1V3 tape.

The translations in the R1V3 system must be copied to a spare tape and sent to Software Technical Support (STS) to be converted and written to a G3r V4 tape. This process takes two weeks. The G3r V4 tapes (including one with translations) must be on-site before the upgrade can begin. Two tapes (one system tape and one backup tape) must always be retained on site with the System 75 XE.

After a software upgrade, several features require special attention because of form changes or potential naming conflicts in the upgrade process. Most of these changes and conflicts are related either to a software upgrade from standard ACD to Call Vectoring or to changes in the ARS/AAR features to compensate for increasing uncertainty in the North American numbering plan. Also, if ARS is enabled (when upgrading from IR1V4 to GD-91 software), it may be necessary to modify the Call Type field on the ARS Analysis form to "unk" for all call types except "iop" or "int."

Table 1-1 contains a list of implementation forms that are either new or changed for G3r V4.

After the upgrade, the Software Associate should check these forms to ensure that the upgraded translations are appropriate for the customer's needs. Refer to *DEFINITY Communications System Generic 3r Transition Reference*, 555-230-620, and *DEFINITY Communications System Generic 3 V4 Implementation*, 555-230-653, for information to make any required changes.

Table 1-1. Changed/New Administration Forms for G3r V4

From R1V3	To G3r V4
ARS fnpa	ARS Digit Analysis
ARS hnpa	ARS Digit Analysis
Allowed Call List	Toll Analysis
Code Restriction fnpa	Toll Analysis
Code Restriction hnpa	Toll Analysis
Interexchange Carrier	Interexchange Carrier
Permanent Switched Calls	Administered Connections
RNX Table	AAR Digit Analysis
Ten-Seven Digit Conversion	ARS/AAR Digit Conversion
None (Note)	Alias Station
None	Alphanumeric Dialing
None	Call Vector
None	Signaling Group
None	Access Endpoints
None	Vector Directory Number

NOTE:
"None" represents a new form for G3r V4.

Alarm Connections

See NOTE. The AUXILIARY connector on System 75 XE systems had appearances for Alarm Monitors 1M, 1m, 2M, 2m, 3M, 3m, and 3W. Whereas, the AUXILIARY connector on a DEFINITY G3r V4 PPN only has appearances for 1M and 1m. If the system being upgraded used the other alarm-monitor appearances, they can either be distributed to the AUXILIARY connector on a G3r V4 EPN, or ''ganged'' so several external devices share the same appearance. The alarms can also be accommodated by paralleling them on the above connectors.

NOTE:
When several external devices are ganged to the same appearance, each device loses its individual identity. An alarm on a shared appearance only denotes that one of several devices reported a problem. Subsequent maintenance effort is needed to determine which device reported the problem and the nature of the problem.

The control circuit pack behind the AUXILIARY connector detects external alarms with a ground-detector chip. Therefore, to gang several external devices, every device must be able to return a true relay ground closure to the AUXILIARY connector. Alternatives, such as a TTL low driver, are inadequate.

Software-Translation Upgrade

The G3r V4 system software and translations will be saved on the TN1656 Tape Drive circuit pack. This tape format is not compatible with the R1V3 tape.

During an upgrade from an R1V3 to a G3r V4, STS must convert the R1V3 translations and write them to a G3r V4 tape. To enable this tape conversion, replace the system tape with a spare R1V3 tape. (Spare R1V3 tape cartridges can be acquired from the QPPCN before the upgrade.) Then, copy the current R1V3 translations to the spare tape, and overnight mail this tape to STS. Also, put the original system tape back into the system.

If possible, the customer should put a freeze on any new translations while the spare tape is being converted. If not, be sure that the customer's switch administrator keeps detailed records of any translation changes made during that interval. These records will facilitate the reassignment of any changes on the G3r V4 tapes after the upgrade.

The new G3r V4 tapes (one with the converted translations, two if duplicated and the rest blank) must be on-site before the upgrade begins.

When an R1V3 system is upgraded to a G3r V4, the tape-conversion software will assign port network ''1'' to the new G3r V4 PPN and port network ''2'' to the EPN derived from the R1V3 single-carrier cabinet stack.

Save Translations

1. Log in at the Manager I on the R1V3 XE.
2. Enter **`save translation`**. Press (RETURN). This command instructs the system to write all translation information from memory to the tape.
3. If the system is equipped with a TN750/B Announcement circuit pack, enter **`display announcements`**, and press (RETURN).

   If administered recorded announcements are listed, enter **`list configuration software-version`**, press (RETURN). Check Page 2 of this form to find out when the announcements were last saved, and ask the customer whether any announcements have changed since then.

   If so, the current announcements can be saved using the save announcements command. Enter **`save announcements`**, and press (RETURN).
4. Remove the system tape, install the backup tape, and wait for the tape to retension.
5. Enter **`save translation`**. Press (RETURN).
6. Enter **`save announcements`** if appropriate. Press (RETURN).

Make Source Tape for Upgrade

A spare R1V3 tape must be acquired from the QPPCN before performing the following steps. There must always be two system tapes on site with the System 75. Do not send the system or backup tape to STS.

After performing the previous procedures, copy the R1V3 translations to the spare tape that will be used to make the G3r V4 tapes. Perform the following procedures:

1. Remove the backup tape, install the spare tape, and wait for the tape to retension.
2. See NOTE. Enter **`save translation`**. Press (RETURN). This command instructs the system to write all translation information from memory to the tape.

   NOTE:
   The off-site STS translation upgrade does not preserve the content of recorded announcements. Therefore, during the upgrade, any announcements stored on a TN750/B circuit pack must be rerecorded.

3. Remove the source tape.
4. Insert the system tape.

The tape removed in Step 3 should be mailed (with next-day delivery) to STS for use in making the G3r V4 tapes.

System Upgrades

There are many configurations of R1V3 System 75 XEs in the field. In terms of both hardware and software, each system can have a unique configuration. However, to simplify G3r V4 upgrades, the existing stack of single-carrier cabinets is always upgraded to an EPN. A new multicarrier cabinet would then always serve as the PPN. It is also possible that two existing R1V3 systems could be upgraded as two EPNs in the same G3r V4 system.

This section gives a sequential list of the steps required to upgrade the R1V3 system.

R1V3 System 75 XE to G3r V4 EPN

See NOTE. Refer to *DEFINITY Communications System Generic 1 and Generic 3 Installation and Test*, 555-230-104, Issue 5, to install the new PPN cabinet.

NOTE:
During the wall-field wiring of the PPN installation, the wall field can also be relabeled with the new port-network number of the R1V3 system to be upgraded. (For an R1V3 system, the STS software upgrade assigned the upgraded EPN as port network ‘‘2.’’)

If a second EPN is being added, refer to *DEFINITY Communications System Generic 1 and Generic 3 Installation and Test*, 555-230-104, Issue 5, to install the new EPN.

Upgrade Single-Carrier Cabinet Stack

The existing PPN cabinet stack is always upgraded to an EPN. Upgrade the port networks using the following procedures.

An R1V3 System 75 XE is upgraded to a G3r V4 EPN with standard, high, or critical reliability by:

- Removing the TDM cables, cable adapters, and terminators
- Removing the control cabinet in position ‘‘A’’
- Installing the J58890N expansion control cabinet in position ‘‘A’’
- Installing the new TDM/LAN cables and terminators
- Adding the G3r V4 circuit packs
- Restructuring the port circuits as required
- Adding G3r V4 circuit packs to the ‘‘B’’ port cabinet for critical reliability if required

Upgrading a System 75 XE single-carrier cabinet stack requires, at a minimum, that the control cabinet in the ‘‘A’’ position be replaced. Since the control cabinet is the bottom cabinet in the port network, the system will have to be completely dismantled. Properly label every cable to be disconnected so that reconnecting them is easier.

Prerequisite Hardware

The equipment in Table 1-2 *must* be on-site before the upgrade begins. Ensure that the tapes are G3r V4 tapes.

To place a claim for missing equipment, as part of the Streamlined Implementation process, call "1-800-772-5409," and respond to the call prompter.

Table 1-2. Required Hardware

Equipment	Description	Quantity
PEC 6300-07X	Processor Port Network	1
J58890N	Expansion Control Cabinet	1
106647985	TN775B Maintenance	1
103281788	TN570 Expansion Interface	2 or 4 (Note 1)
103557211 or 103557336 or 106706955	TN768 Tone-Clock TN780 Tone-Clock TN2182 Tone-Clock	1 or 2 (Note 2) 1 or 2 (Notes 2, 11) Note 12
405907015	WP-91716 L3 TDM/LAN Cable	0 to 3 (Note 3)
63300A	FL2P-P-XX Fiber Cable	1 or 2 (Note 4)
106455348 or 106455363	9823-A Lightwave Transceiver 9823-B Lightwave Transceiver	2 or 4 (Note 5) 2 or 4 (Note 5)
105631527	AHF110 TDM/LAN Bus Terminator	2
J58890TF	Tape Cartridge	2 or 4 (Note 6)
846307841	"C" Port Label	1
846307958	"D" Port Label	1
846307817	Lower Rear Cover	1 (Note 7)
106689516	TN771D Maintenance/Test	1 (Note 8)
846307809	Ground Plate	1 (Note 8)
H600-248 G1	ICC Cables	2 (Note 8)
846309466	DEFINITY Label	1 per cabinet
846408268	Earthquake Front Panel	1 (Note 9)
846408386	Earthquake Ground Plate	1 (Note 9)
846408250	Stiffener	1 (Note 9)
846408243	Earthquake Front Mounting Angle	1 (Note 9)

(See notes on the next page)

NOTE:

1. Two are required for standard- or high-reliability switches with two port networks. One TN570 is shipped loose with the EPN equipment. The factory has installed the other TN570 in the new PPN.
2. Four are required for critical-reliability switches with two port networks. Two TN570s are shipped loose with the EPN equipment. The factory has installed the other two TN570s in the new PPN. shipped with the system, install one in the PPN, the other in the EPN. If four are shipped, install two in the PPN and two in the EPN.
3. One with standard or high reliability, two with critical reliability.
4. This value depends on the number of single-carrier cabinets in the upgraded EPN.
5. Two cables are required for a critical-reliability G3r V4 system.
6. Four transceivers are required for a critical-reliability G3r V4 system.
7. High- or critical-reliability G3r V4 systems require four tapes, two as system tapes and two as backup tapes.
8. Required for the ‘‘B’’ port cabinet of a critical-reliability G3r V4 system.
9. Required for a critical-reliability G3r V4 system.
10. Required if earthquake protection is provided.
11. Use TN780 as Tone-Clock for Stratum 3 timing. Also required with the TN780 are the TN748, and TN744 for tone-detection.
12. The TN2182 Tone-Clock provides tone detection, tone generation, and tone-clock in one circuit pack, and it replaces the TN756, TN768, and TN780 circuit packs, while providing the same functionality as the TN748 and TN420 circuit packs.

Required Tools

The following tools and items may be required during the upgrade:

- Flashlight or high-intensity AC drop light
- Power screwdriver (optional)
- 1/4-inch flat-blade screwdriver
- 1/4-inch socket with ratchet (optional)
- Long-nose pliers to straighten backplane pins
- Static-proof or original circuit-pack packaging for transporting circuit packs
- Labels for identifying the port circuit packs and cables attached to the rear of cabinets
- Receptacle for holding screws
- One dozen #8 self-tapping screws
- Repair kit for backplane pins (KS-22876 L2 or equivalent)
- One copy of each of the following manuals:
  - *DEFINITY Communications System Generic 3r V4 Maintenance*, 555-230-105, Issue 4
  - *DEFINITY Communications System Generic 3 V4 Implementation*, 555-230-655

Preventive Maintenance

During the G3r V4 upgrade, follow routine preventive maintenance procedures on the system to be upgraded. For information about the procedures and necessary equipment, refer to the “Preventive Maintenance’’ section in *DEFINITY Communications System Generic 3r V4 Maintenance*, 555-230-105, Issue 4.

Verify System Status

Before proceeding, the system should be examined for alarms, and every problem should be corrected. The system must be alarm-free.

Label Cables

To make reconnecting the cables simpler and more reliable, label every connector cable associated with the system (if not already labeled).

Shut Down DEFINITY AUDIX System

1. See WARNING. If a DEFINITY AUDIX System resides in the system to be upgraded, shut down the AUDIX assembly and allow the disk to completely spin down.

WARNING:
Neglecting to shut down an AUDIX assembly before powering down the system cabinet where it resides can damage the AUDIX disk.

2. See WARNING. To avoid an unexpected AUDIX reboot after an unplanned switch reboot, unseat the AUDIX assembly from its backplane connectors.

WARNING:
Before inserting or removing a circuit pack from a cabinet, put on a wrist strap and attach its plug or clip to the cabinet's frame.

Power Down System

See CAUTION. Behind each cabinet's power supply, set the circuit breaker to OFF.

CAUTION:
Powering down the control cabinet will cause important system data, such as BCMS data, records of queued ACD calls, Automatic Wakeup requests, and Do Not Disturb requests to be lost. Refer to DEFINITY Communications System Generic 1, Generic 3i, Generic 3i-Global, and Generic 3i V4 Maintenance, 555-204-105, Issue 7, for information about preparing the system for a power down. BCMS data cannot be stored to or retreived from tape.

Disconnect Power and Grounding

1. Disconnect the cabinet power cords from the rear of each cabinet.
2. Disconnect the coupled bonding conductor.
3. Disconnect the 6-AWG cabinet ground wire from the ground bar in the cabinet.

NOTE:
A screwdriver is required to loosen and tighten the bolts that secure the ground wire to the ground bar.

Install Power-Failure Transfer Ground Strap

CAUTION:
To avoid contaminating single-point ground, do not connect the ground strap while the system is powered up.

1. Connect a strap's lead either to pin 49 of the connecting block or to pin 49 of the CAP (cable access panel) associated with the power-failure transfer panel.
2. Route the other lead to an approved ground source.
3. Connect the lead to the approved ground source.

Remove Door and Panels and Disconnect Cables

1. Remove the front door from all of the cabinets.
2. Disconnect all of the previously labeled connector cables.
3. Disconnect the Manager I from the TERM connector.
4. Remove the ground plate(s) from between all of the cabinets.
5. Remove the top and bottom rear covers from all of the cabinets.

Remove Circuit Packs

1. Label each port circuit pack in control cabinet "A" with its slot number.
2. See WARNING and NOTE. Remove all circuit packs and power units from the control cabinet. Store the circuit packs in the static-proof packaging.

WARNING:
Before inserting or removing a circuit pack from a cabinet, put on a wrist strap and attach its plug or clip to the cabinet's frame.

NOTE:
If a TN756 tone detector/generator is removed from the control cabinet, a new G3r V4 tone-clock (TN2182) should replace this circuit pack. This tone detector will serve to replace the tone detector circuits on the TN756. If the TN2182 is used, no TN748B is required.

3. See WARNING. If a TN741 (or an international TN419A) Tone-Clock resides in port cabinet ‘‘B,’’ remove this circuit pack from the port cabinet. It will not be reused.

WARNING:
Before inserting or removing a circuit pack from a cabinet, put on a wrist strap and attach its plug or clip to the cabinet’s frame.

Disconnect TDM Cables

See NOTE. Remove all of the TDM cables and AHF103 TDM cable adapters. They will not be reused.

NOTE:
Before disconnecting each cable adapter, note its position.

Remove the Existing Control Cabinet

Since the control cabinet is located at the bottom of the port network, the system will have to be completely dismantled. At this point in the upgrade, all of the power, grounding, TDM, and connector cables should be disconnected. Before you proceed, ensure that there is adequate space available to place each cabinet in an out-of-the-way location as the port network is dismantled.

1. Remove the cabinet clip between each cabinet.
2. See DANGER. Remove the port cabinets from the stack, and put them in a safe place.

DANGER:
A port cabinet may weigh as much as 125 pounds and requires two handlers to unstack the cabinets. If third or fourth cabinet is to be removed, remove the front door, power supply, and circuit packs to lighten the load. Make sure the two handlers are capable (size and strength) of lifting the cabinet from its position.

3. If the control cabinet is earthquake mounted, remove the hardware securing the cabinet to the floor.
4. Move the existing control cabinet out of its present location. It will not be reused so it can be removed at this time.

Unpack and Inspect Expansion Control Cabinet for Damage

1. See DANGER. Unpack cabinet.

   DANGER:
   Take care to avoid injury while cutting and removing bands.

2. Visually inspect cabinet for any physical damage caused during shipping. Report any damage for appropriate action per local procedures.

Remove Front Door

Remove the front door of expansion control cabinet.

1. Use a screwdriver, and turn door-latch screw counterclockwise one quarter turn to release door (see Figure 1-2).
2. Lift door from lower slots and remove from cabinet.

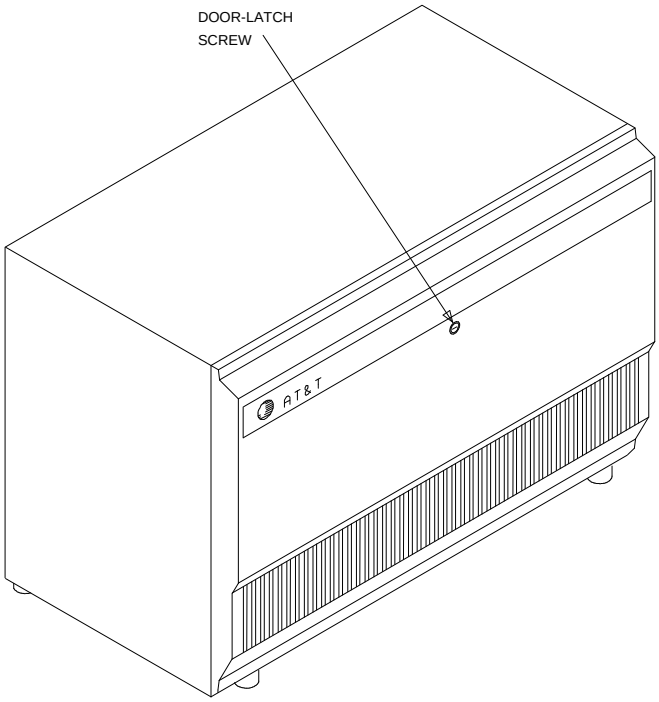

Figure 1-2. Location of Door-Latch Screw for G3r V4 Cabinet

Install Expansion Control Cabinet

1. See DANGER. Position the J58890N-1 expansion control cabinet ‘‘A’’ at the desired location.

   DANGER:
   The cabinet may weigh as much as 130 pounds and requires two handlers. Use caution to avoid injury.

2. If earthquake protection is not required, install hole plugs (provided with cabinet) in the holes previously occupied by the two carriage bolts at the bottom rear of the cabinet.

Add Earthquake Protection

If earthquake protection is required:

1. Place the front mounting angle at the location selected for the front of the expansion control cabinet.
2. Using the angle as a template, mark the locations of the two mounting bolts.
3. Drill two holes 1/2 inch in diameter and 1-1/2 inches deep at the spots marked in Step 2.
4. Mount the front mounting angle to the floor (Figure 1-3).
5. Move the cabinet back into place, and temporarily stabilize the cabinet by attaching the cabinet to the angle with two No. 12-24 by 1/2-inch thread-forming screws.
6. Insert a pencil or marker through the two holes (previously occupied with carriage bolts) in the bottom rear of the cabinet, and mark the floor directly beneath each hole.
7. Remove the two screws installed in Step 5, and move the cabinet out of the way.
8. Drill two holes 1/2 inch in diameter and 1-1/2 inches deep at the spots marked in Step 6.
9. Move the cabinet back into place.
10. Attach the cabinet to the front mounting angle using four No. 12-24 by 1/2-inch thread-forming screws.

11. In the rear of the cabinet, lay the stiffener on the bottom of the cabinet, aligning the stiffener with the holes in the bottom of the cabinet.
12. Fasten the cabinet to the floor (Figure 1-4).

NOTE:
This procedure is only a portion of the complete earthquake protection package. According to the logical installation sequence, instructions for adding the earthquake front plate and earthquake ground plate will be given at the appropriate location in this chapter.

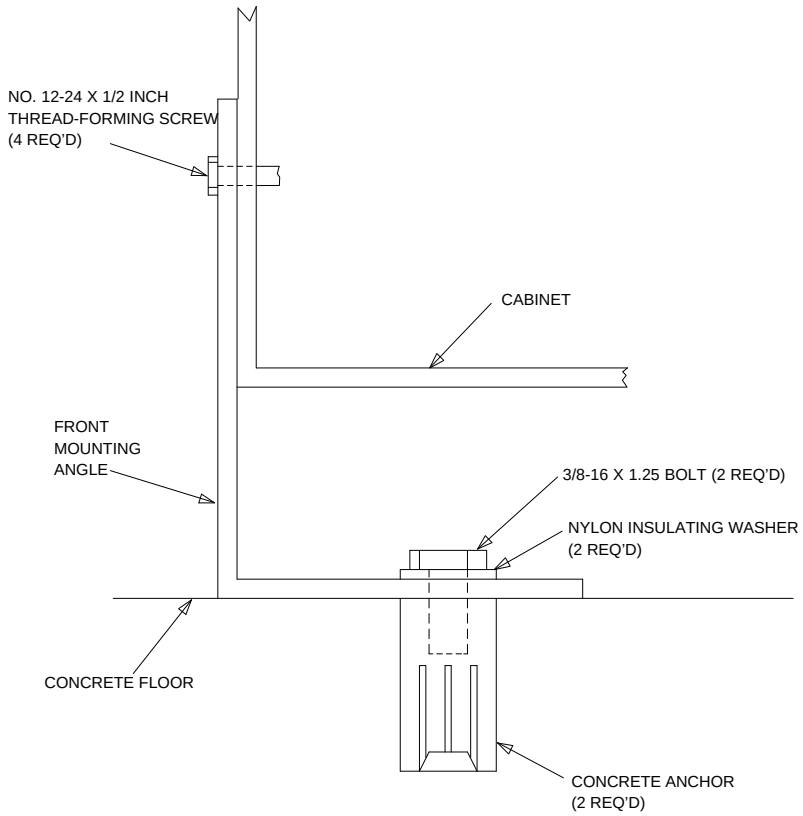

Figure 1-3. Front Mounting Angle — Concrete Floor

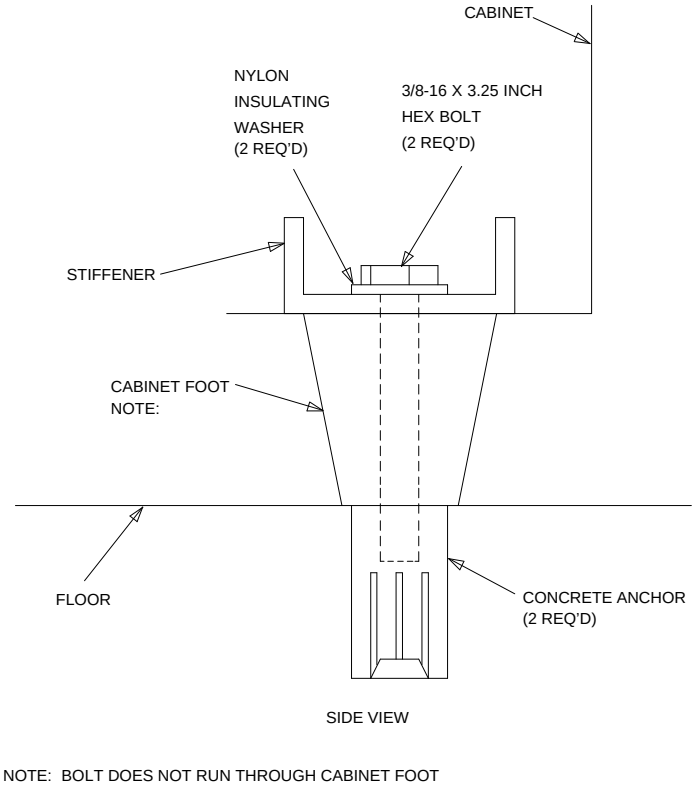

Figure 1-4. Cabinet Earthquake Mounting — Concrete Floor

Install Port Cabinets

1. See DANGER. Place the port cabinets into the positions from which they were previously removed (see Figure 1-5).

   DANGER:
   The cabinet may weigh as much as 130 pounds and requires two handlers. Use caution to avoid injury.

2. Install the new labels on the front and rear of the port cabinets.

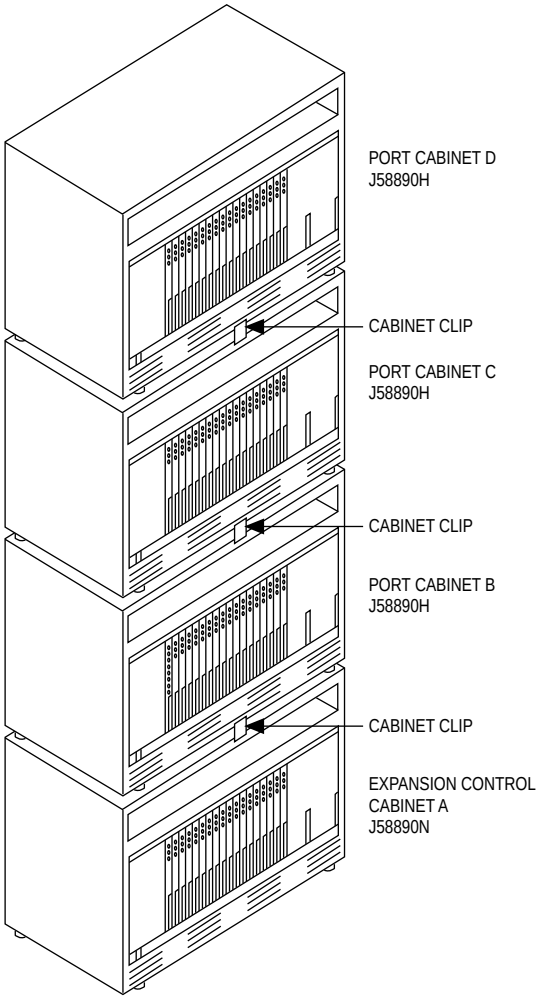

Figure 1-5. 4-Cabinet G3r V4 EPN — Front View, Doors Removed

Install Circuit Packs

1. See WARNINGS. Replace the circuit packs and power supplies in port cabinets "C" and "D" if they were previously removed.

   WARNING:
   Before inserting or removing a circuit pack from a cabinet, put on a wrist strap and attach its plug or clip to the cabinet's frame.

   WARNING:
   These replaced port circuit packs must conform to the usable vintage requirements for a G3r V4 system (see Reference Guide for Circuit-Pack Vintages and Change Notices).

2. See preceding WARNING and following NOTE. Using the following figure, the label, and the annotated "list configuration all" (provided with the G3r V4 tape), install the G3r V4 control circuit packs into the new expansion control cabinet.

   NOTE:
   If a TN756 tone detector/generator is removed from the control cabinet, a new G3r V4 tone-clock (TN2182) should replace this circuit pack. This tone detector will serve to replace the tone detector circuits on the TN756. If the TN2182 is used, no TN748B is required..

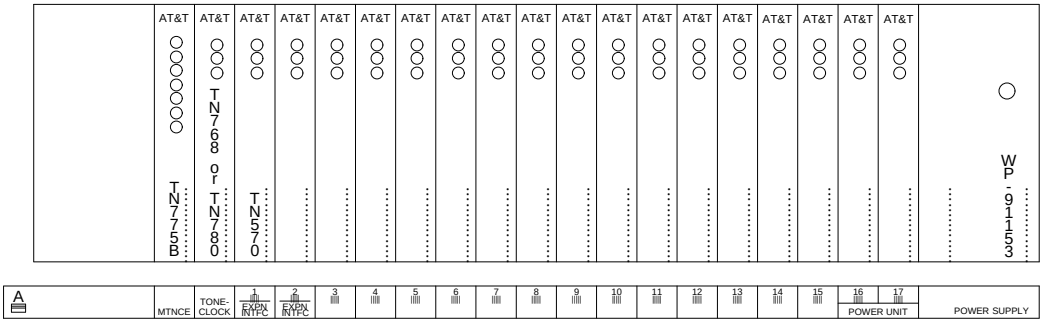

Figure 1-6. Circuit-Pack Locations in G3r V4 Expansion Control Cabinet

3. See preceding WARNINGS and following NOTE. Install the port circuit packs, previously removed, into the ‘‘A’’ cabinet using the decal and the annotated ‘‘list configuration all’’ (provided with the G3r V4 tape) as a guide.

   NOTE:
   Since the new G3r V4 expansion control carrier has from one to three more port slots than the removed control carrier, there should not be a need to move and retranslate these circuit packs.

4. See preceding WARNINGS and following NOTE. For an EPN in a critical-reliability G3r V4 system, install a TN768, TN780, or TN2182 Tone-Clock and a TN570 EI in slots ‘‘1’’ and ‘‘2’’ of port cabinet “B.’’

   Do not reinsert the TN741 (or the international TN419A) Tone-Clock into port cabinet “B.’’

   NOTE:
   Installing these circuit packs may require some port circuit packs be moved. If this was not performed before the upgrade, install the circuit packs now. The port circuits will have to be retranslated after the system is rebooted with the G3r V4 tape.

Install TDM/LAN Bus Terminators

1. If the EPN has only one single-carrier cabinet, verify that the two AHF110 TDM/LAN bus terminators are located per Figure 1-7.
2. If the EPN has more than one single-carrier cabinet, perform the following procedures:
   a. Verify that an AHF110 TDM/LAN bus terminator is installed on the right side of the expansion control cabinet (looking from the back of the cabinet) as shown in Figure 1-8.
   b. On the top port cabinet, remove the existing TDM terminator (AHF1) and replace it with a AHF110 TDM/LAN bus terminator.

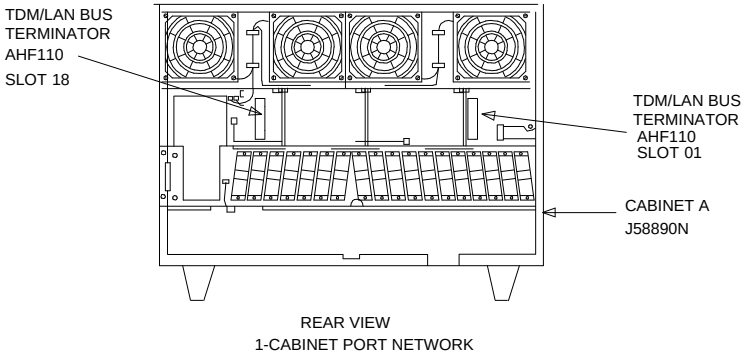

Figure 1-7. Locations of TDM/LAN Bus Terminators for Single-Cabinet EPN

Connect TDM/LAN Cables and ICC Cables

1. Route and connect the new WP-91716 L3 TDM/LAN cables (see Figure 1-8). Use the following steps to route the cables between the R1V3 port cabinets being reused. The new cables are not run through the existing slot in the rear shelves.
   a. Loosen two left (as viewed from the rear) connector-panel screws, then remove the other two connector-panel screws.
   b. Attach the TDM/LAN cable to the backplane, and slide the cable between the connector panel and the rear shelf (not through the existing hole in the shelf). Route the cable along the bottom of the cabinet.
   c. Replace and tighten the connector-panel screws.
2. Connect the ICC cables as shown in Table 1-3 and Figure 1-9 and Figure 1-10.
3. On the ‘‘A’’ carrier, verify the CFY1 current limiter (CURL) is connected to pin-field block ‘‘00’’ (see Figure 1-9). The CURL’s components should be on the left side as viewed from the rear.

Table 1-3. Intercabinet Cable Connections

Connect ICC Cables				
	From		**To**	
	Carrier	**Pin-Field Block**	**Carrier**	**Pin-Field Block**
EPN	J58890N	ICCA	J58890H	ICCA
		ICCB		ICCB

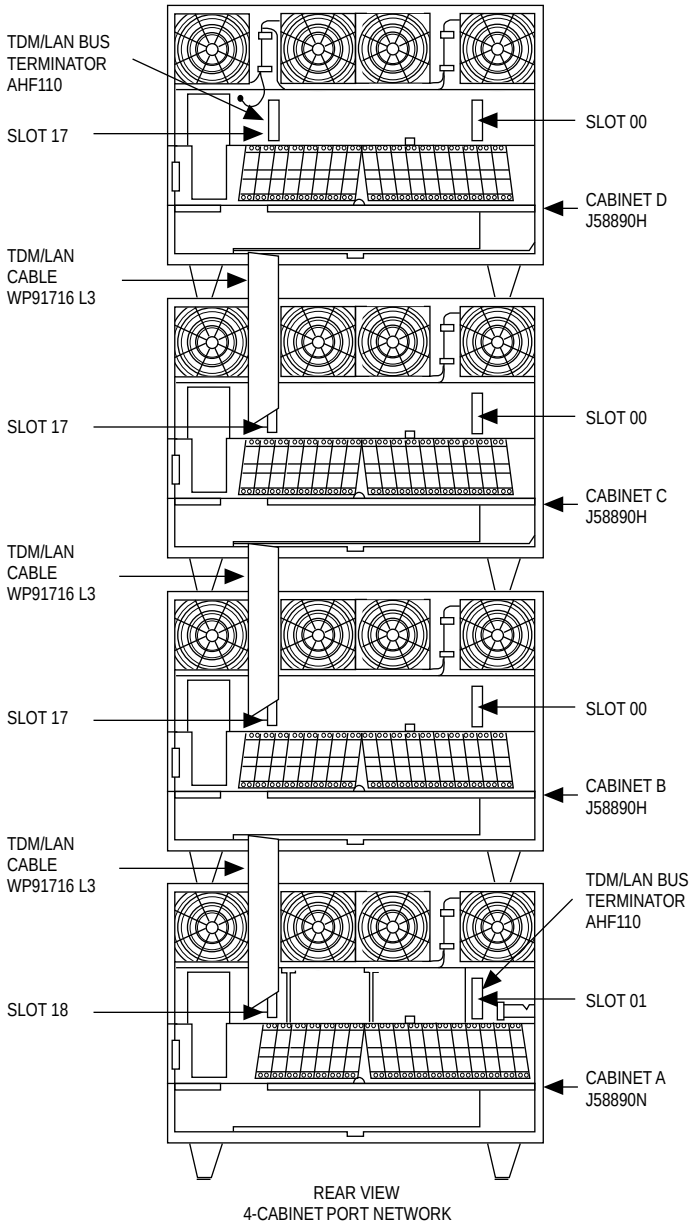

Figure 1-8. TDM/LAN Connections for G3r V4 EPN

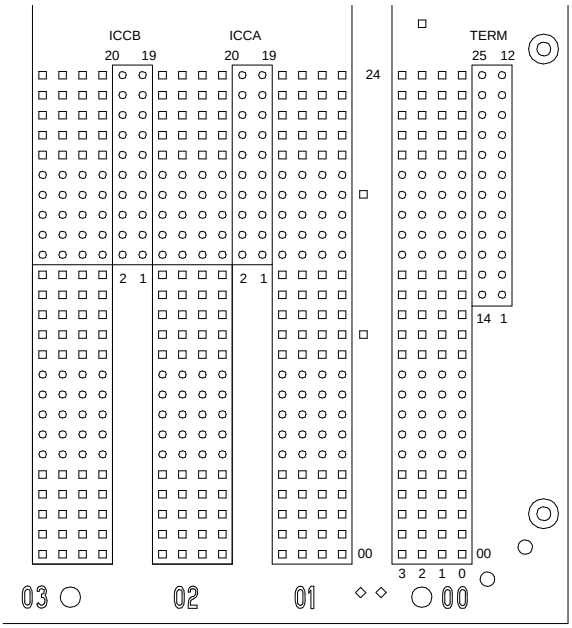

Figure 1-9. ICC Pin-Field Blocks on J58890N Expansion Control Cabinet

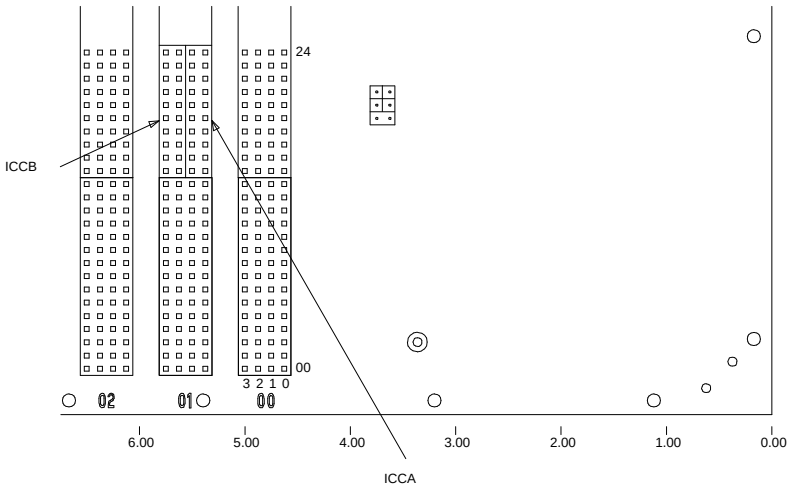

Figure 1-10. ICC Pin-Field Blocks on J58890H Port Cabinet

Interconnect Port Networks

See NOTE. Fiber-optic cabling terminated to 9823A lightwave transceivers can interconnect port networks (PNs) located up to 4,900 feet (about 9/10 mile) apart. Whereas, fiber-optic cabling terminated to 9823B lightwave transceivers can interconnect port networks located up to 25,000 feet (about 4.7 miles) apart. When available and whenever the desired distance between the port networks is less than 25,000 feet, fiber is the preferred medium for interconnecting port networks, providing significantly higher-bandwidth connectivity than DS1C remoting.

NOTE:
As always, these distance limitations are approximate measurements of the *actual* fiber right-of-way (not of the shortest linear distance) between the two endpoints.

With Standard Reliability

When a standard-reliability PPN and EPN are collocated, one fiber-optic cable (FL2P-P-XX) and two lightwave transceivers (9823-type) are required to connect the EPN.

NOTE:
For the FL2P-P-XX fiber-optic cable, the -XX suffix represents the length of the cable in feet. Based on floor-plan considerations, the length of these cables may vary. However, 20-foot cables are normally adequate for a G3r V4 with two port networks.

When a standard-reliability PPN and EPN are remotely separated with fiber, two fiber-optic cables (FL2P-P-XX), two lightwave transceivers (9823-type), and two lightwave-interface units (provided by the PSC) are required.

When a standard-reliability PPN and EPN are remotely separated with DS1 facilities, two DS1C circuit packs (TN574), two DS1C-to-EI cables (846448637 and/or 846448645), two H-600-348 cables, from one to four pairs of channel service units (CSUs), and from one to four pairs of wall-field cables (provided with the CSUs) are required.

With High Reliability

When a high-reliability PPN and EPN are collocated, one fiber-optic cable (FL2P-P-XX) and two lightwave transceivers (9823-type) are required to connect the EPN.

When a high-reliability PPN and EPN are remotely separated with fiber, two fiber-optic cables (FL2P-P-XX), two lightwave transceivers (9823-type), and two lightwave-interface units (provided by the PSC) are required.

When a high-reliability PPN and EPN are remotely separated with DS1 facilities, two DS1C circuit packs (TN574), two DS1C-to-EI cables (846448637 and/or 846448645), two H-600-348 cables, from one to four pairs of channel service units (CSUs), and from one to four pairs of wall-field cables (provided with the CSUs) are required.

With Critical Reliability

When a critical-reliability PPN and EPN are collocated, two fiber-optic cables (FL2P-P-XX) and four lightwave transceivers (9823-type) are required to connect the EPN.

When a critical-reliability PPN and EPN are remotely separated with fiber, four fiber-optic cables (FL2P-P-XX), four lightwave transceivers (9823-type), and four lightwave-interface units (provided by the PSC) are required.

When a critical-reliability PPN and EPN are remotely separated with DS1 facilities, this arrangement requires:

- Four DS1C circuit packs (TN574)
- Four DS1C-to-EI cables (846448637 and/or 846448645)
- Four H-600-348 cables
- Two, four, six, or eight pairs of channel service units (CSUs)
- Two, four, six, or eight pairs of wall-field cables (provided with the CSUs)

NOTE:
It is important to label every cable that you install. For details, refer to the section, *Labels for Fiber-Optic Cables*, in Appendix E of the installation manual.

NOTE:
Throughout these procedures, remember to keep track of which fiber is attached to which connector on each lightwave transceiver. This section provides figures offering the suggested way of making these connections.

The connectors on the lightwave transceivers are labeled either “TX” (transmit) or “RX” (receive), while the fibers attached to each connector are numbered either ‘‘1’’ or ‘‘2.’’ A viable fiber connection is only made when both fibers in each cable (that is, ‘‘1’’ and ‘‘2’’) route from the “TX” connector of a port network to the “RX’’ connector of its adjacent port network. For an example, refer to Figure 1-12.

NOTE:
For implementation details, refer to the “Fiber Link Administration’’ sections of *DEFINITY Communications System Generic 3 V4 Implementation*, 555-230-653.

Connections with Standard Reliability (Adjacent Cabinets)

1. Behind port carrier B of the multicarrier PPN (see Figure 1-11 and Figure 1-12):
   - Install a 9823-type lightwave transceiver on the connector at slot 1B02.
   - Connect one end of the fiber-optic cable to the 9823-type lightwave transceiver at slot 1B02.
   - Route the fiber-optic cable from the 9823-type lightwave transceiver to the cabinet's cable tray and downward out of the cabinet to the EPN stack.
2. Behind control cabinet A of the single-carrier EPN:
   - Install the same kind (either 9823-A or 9823-B) of lightwave transceiver on cable connector at slot 2A01.
   - Connect the other end of the fiber-optic cable coming from the PPN to the 9823-type lightwave transceiver at slot 2A01.
3. Delicately attach the fiber-optic cable (with cable ties) to the rear covers of the EPN stack.
4. Coil up the surplus length of fiber-optic cable, and place the coil either in the cable manager or on the bottom shelf (holding the power supply) of the PPN cabinet.

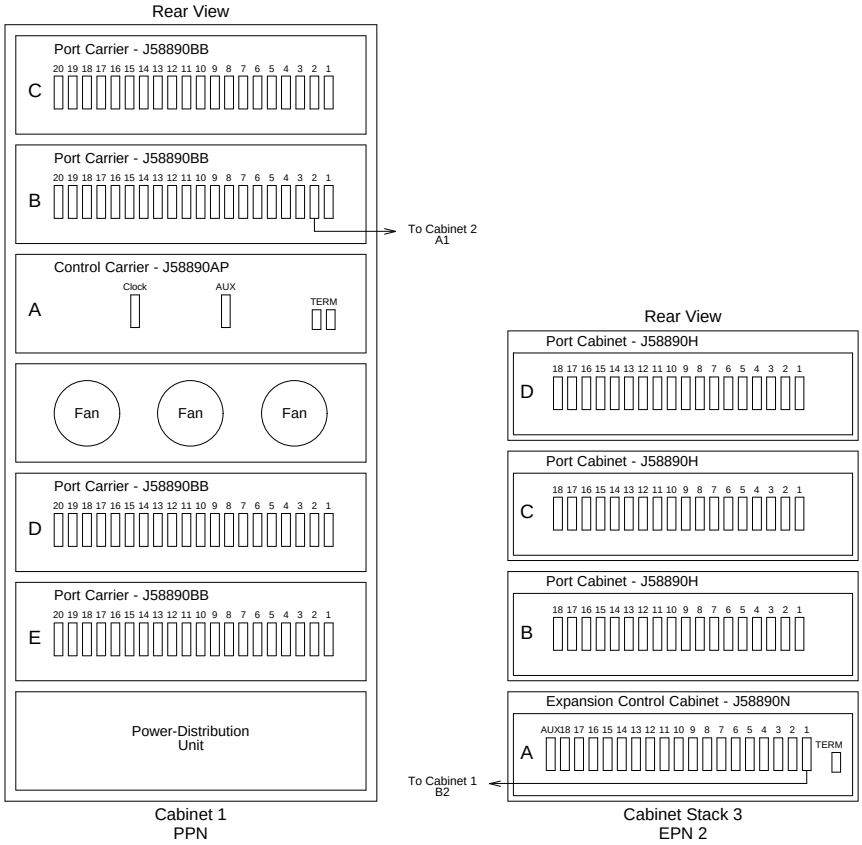

Figure 1-11. Standard-Reliability G3r V4 with Two Port Networks

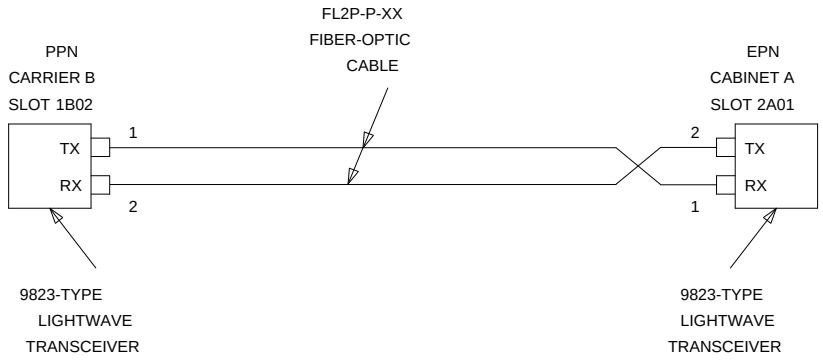

Figure 1-12. With Standard Reliability

Connections with Standard Reliability (Remote Cabinets)

1. Behind port carrier B of the multicarrier PPN (Figure 1-11 and Figure 1-13):
   - Install a 9823-type lightwave transceiver on the connector at slot 1B02.
   - Connect one end of the fiber-optic cable to the 9823-type lightwave transceiver at slot 1B02.
   - Route the fiber-optic cable from the 9823-type lightwave transceiver to the cabinet cable tray and out of the cabinet through the cable manager to the PDS cross-connect facility.
   - At the PDS cross-connect facility, connect the fiber-optic cable to the lightwave-interface unit provided.
   - Delicately attach the fiber-optic cable (with cable ties) to the wall of the cable tray at the built-in cable-tie positions.
2. Behind control cabinet A of the single-carrier EPN:
   - Install the same kind (either 9823-A or 9823-B) of lightwave transceiver on cable connector at slot 2A01.
   - Connect the fiber-optic cable to the 9823-type lightwave transceiver at slot 2A01.
   - Route the fiber-optic cable from the 9823-type lightwave transceiver to the cabinet cable tray and out of the cabinet through the cable manager to the PDS cross-connect facility.
   - At the PDS cross-connect facility, connect the fiber-optic cable to the lightwave-interface unit provided.

- Delicately attach the fiber-optic cable (with cable ties) to the rear covers of the EPN stack.
- Coil up the surplus length of fiber-optic cable, and place the coil in the cable manager.

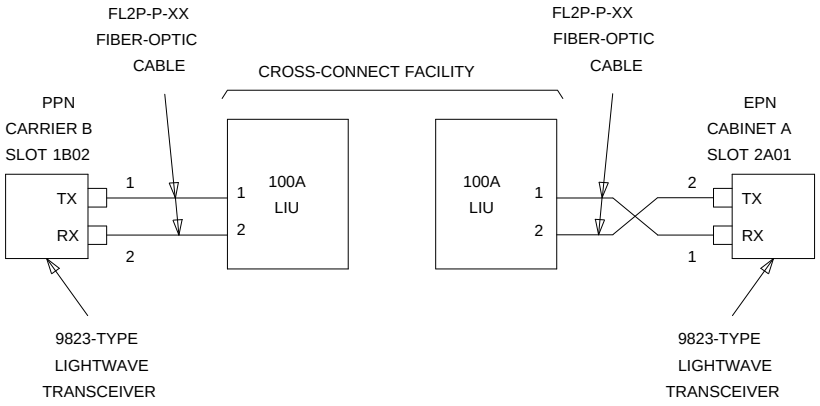

Figure 1-13. With Standard Reliability

Connections with High Reliability (Adjacent Cabinets)

1. Behind port carrier C of the multicarrier PPN (see Figure 1-14 and Figure 1-15):
   - Install a 9823-type lightwave transceiver on the connector at slot 1C02.
   - Connect one end of a fiber-optic cable to the 9823-type lightwave transceiver at slot 1C02.
   - Route the fiber-optic cable from the 9823-type lightwave transceiver to the cabinet's cable tray and downward out of the cabinet to the EPN stack.
2. Behind control cabinet A of the single-carrier EPN:
   - Install the same kind (either 9823-A or 9823-B) of lightwave transceiver on cable connector at slot 2A01.
   - Connect the fiber-optic cable, coming from control carrier C of the PPN, to the 9823-type lightwave transceiver at slot 2A01.
   - Delicately attach the fiber-optic cable (with cable ties) to the rear covers of the EPN stack.

- Coil up the surplus length of fiber-optic cable, and place the coil either in the cable manager or on the bottom shelf (holding the power supply) of the PPN cabinet.

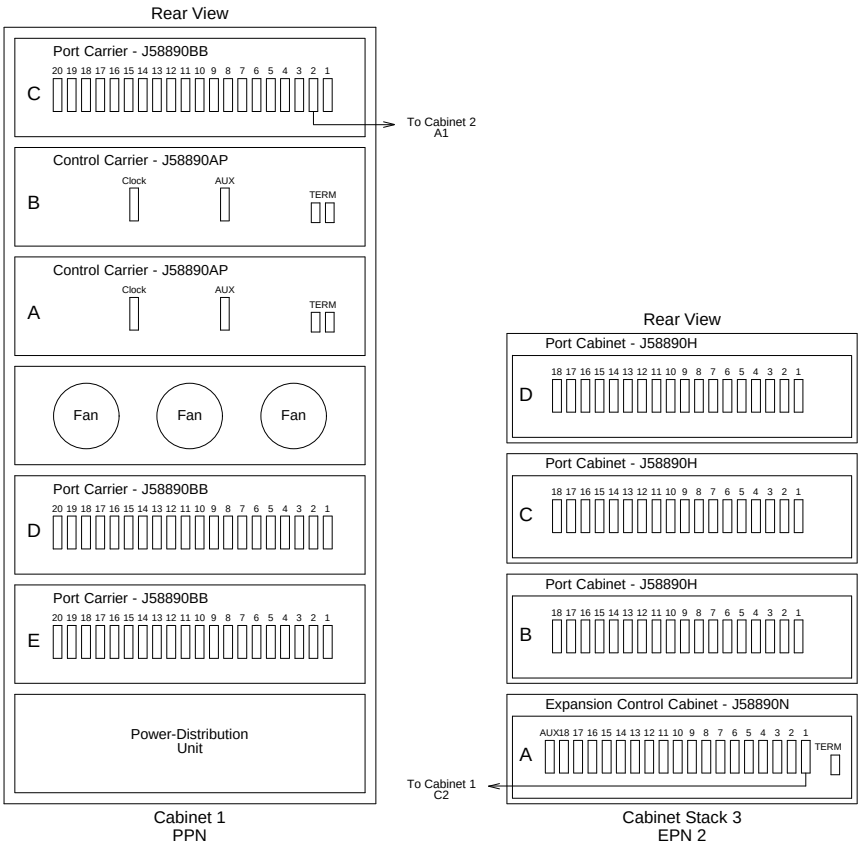

Figure 1-14. High-Reliability G3r V4 with Two Port Networks

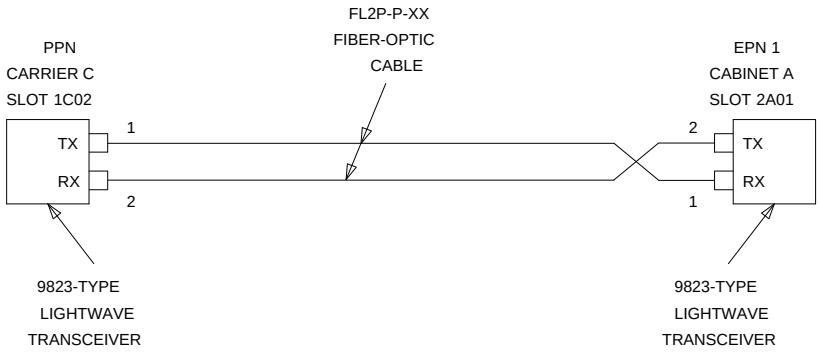

Figure 1-15. Fiber-Optic Connections PPN to EPN

Connections with High Reliability (Remote Cabinets)

1. Behind port carrier C of the multicarrier PPN (see Figure 1-14 and Figure 1-16):
   - Install a 9823-type lightwave transceiver on the connector at slot 1C02.
   - Connect one end of a fiber-optic cable to the 9823-type lightwave transceiver at slot 1C02.
   - Route the fiber-optic cable from the 9823-type lightwave transceiver to the cabinet cable tray and out of the cabinet through the cable manager to the PDS cross-connect facility.
   - At the PDS cross-connect facility, connect the fiber-optic cable to the lightwave-interface unit provided.
   - Delicately attach the fiber-optic cable (with cable ties) to the wall of the cable tray at the built-in cable-tie positions.
2. Behind control cabinet A of the single-carrier EPN:
   - Install the same kind (either 9823-A or 9823-B) of lightwave transceiver on cable connector at slot 2A01.
   - Connect the fiber-optic cable, coming from port carrier C of the PPN, to the 9823-type lightwave transceiver at slot 2A01.
   - Route the fiber-optic cable from the 9823-type lightwave transceiver to the cabinet cable tray and out of the cabinet through the cable manager to the PDS cross-connect facility.
   - At the PDS cross-connect facility, connect the fiber-optic cable to the lightwave-interface unit provided.

- Delicately attach the fiber-optic cable (with cable ties) to the rear covers of the EPN stack.
- Coil up the surplus length of fiber-optic cable, and place the coil in the cable manager.

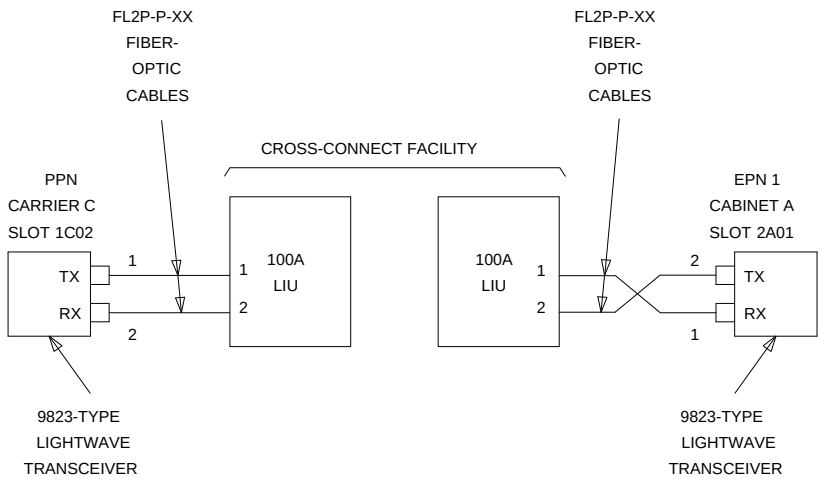

Figure 1-16. Fiber-Optic Connections PPN to EPN

Connections with Critical Reliability (Adjacent Cabinets)

1. Behind port carrier C of the multicarrier PPN (see Figure 1-17 and Figure 1-18):
   - Install a 9823-type lightwave transceiver on the connector at slot 1C02.
   - Connect one end of a fiber-optic cable to the 9823-type lightwave transceiver at slot 1C02.
   - Route the fiber-optic cable from the 9823-type lightwave transceiver to the cabinet's cable tray and downward out of the cabinet to the EPN stack.
   - Delicately attach the fiber-optic cable (with cable ties) to the wall of the cable tray at the built-in cable-tie positions.
2. Behind port cabinet B of the single-carrier EPN:
   - Install the same kind (either 9823-A or 9823-B) of lightwave transceiver on cable connector at slot 2B02.
   - Connect the fiber-optic cable, coming from port carrier C of the PPN, to the 9823-type lightwave transceiver at slot 2B02.

- Delicately attach the fiber-optic cable (with cable ties) to the rear covers of the EPN stack.
- Coil up the surplus length of fiber-optic cable, and place the coil either in the cable manager or on the bottom shelf (holding the power supply) of the PPN cabinet.

3. Behind port carrier D of the multicarrier PPN:
   - Install a 9823-type lightwave transceiver on the connector at slot 1D02.
   - Connect one end of a fiber-optic cable to the 9823-type lightwave transceiver at slot 1D02.
   - Route the fiber-optic cable from the 9823-type lightwave transceiver to the cabinet's cable tray and downward out of the cabinet to the EPN stack.
   - Delicately attach the fiber-optic cable (with cable ties) to the wall of the cable tray at the built-in cable-tie positions.
4. Behind control cabinet A of the single-carrier EPN:
   - Install the same kind (either 9823-A or 9823-B) of lightwave transceiver on cable connector at slot 2A01.
   - Connect the fiber-optic cable, coming from port carrier D of the PPN, to the 9823-type lightwave transceiver at slot 2A01.
   - Delicately attach the fiber-optic cable (with cable ties) to the rear covers of the EPN stack.
   - Coil up the surplus length of fiber-optic cable, and place the coil either in the cable manager or on the bottom shelf (holding the power supply) of the PPN cabinet.

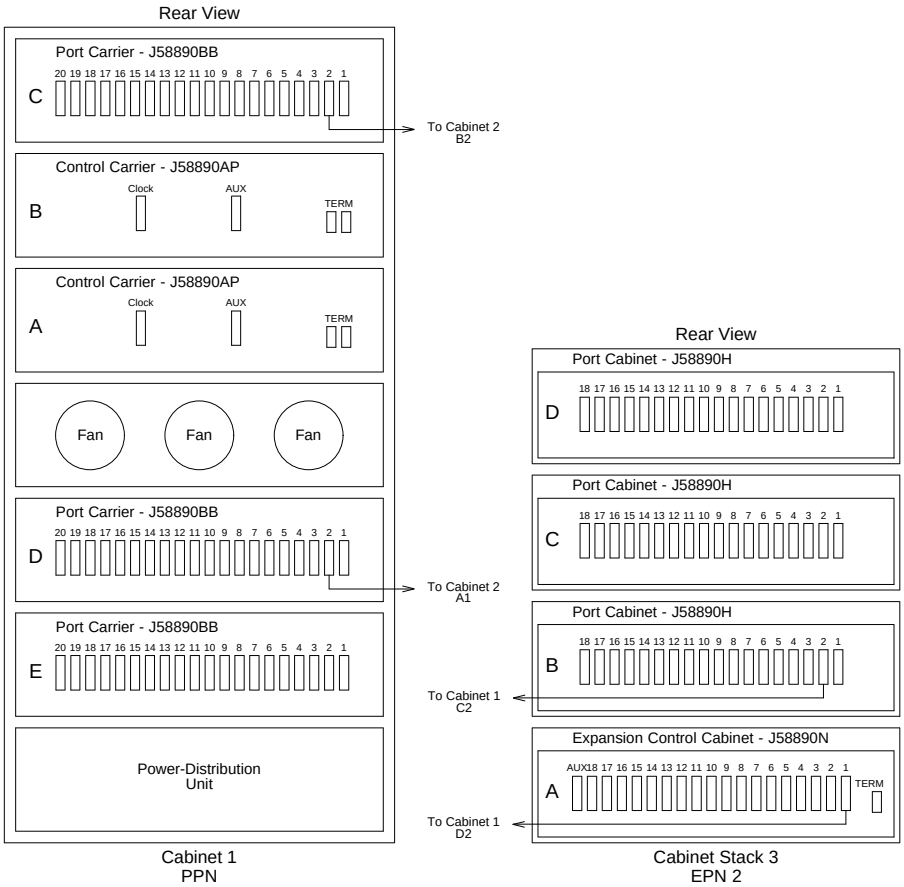

Figure 1-17. Critical-Reliability G3r V4 with Two Port Networks

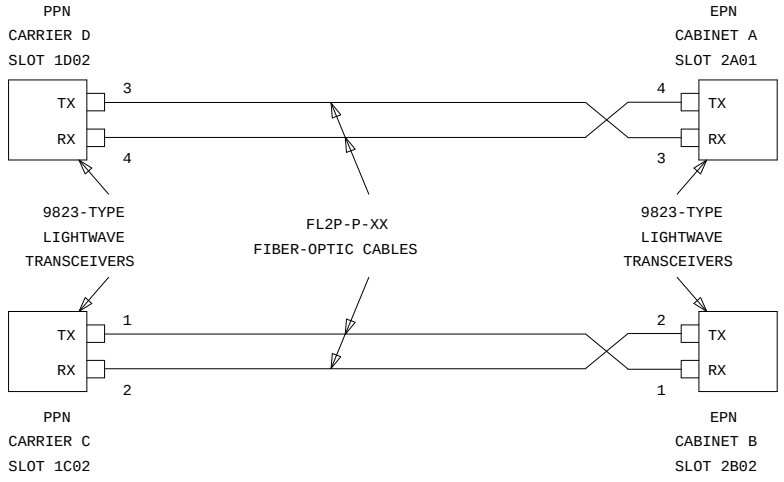

Figure 1-18. With Critical Reliability

Connections with Critical Reliability (Remote Cabinets)

1. Behind port carrier C of the multicarrier PPN (see Figure 1-17 and Figure 1-19):
   - Install a 9823-type lightwave transceiver on the connector at slot 1C02.
   - Connect one end of a fiber-optic cable to the 9823-type lightwave transceiver at slot 1C02.
   - Route the fiber-optic cable from the 9823-type lightwave transceiver to the cabinet cable tray and out of the cabinet through the cable manager to the PDS cross-connect facility.
   - At the PDS cross-connect facility, connect the fiber-optic cable to the lightwave-interface unit provided.
   - Delicately attach the fiber-optic cable (with cable ties) to the wall of the cable tray at the built-in cable-tie positions.
2. Behind port cabinet B of the single-carrier EPN:
   - Install the same kind (either 9823-A or 9823-B) of lightwave transceiver on cable connector at slot 2B02.
   - Connect the fiber-optic cable, coming from port carrier C of the PPN, to the 9823-type lightwave transceiver at slot 2B02.

- Route the fiber-optic cable from the 9823-type lightwave transceiver to the cabinet cable tray and out of the cabinet through the cable manager to the PDS cross-connect facility.
- At the PDS cross-connect facility, connect the fiber-optic cable to the lightwave-interface unit provided.
- Delicately attach the fiber-optic cable (with cable ties) to the rear covers of the EPN stack.
- Coil up the surplus length of fiber-optic cable, and place the coil in the cable manager.

3. Behind port carrier D of the multicarrier PPN:
   - Install a 9823-type lightwave transceiver on the connector at slot 1D02.
   - Connect one end of a fiber-optic cable to the 9823-type lightwave transceiver at slot 1D02.
   - Route the fiber-optic cable from the 9823-type lightwave transceiver to the cabinet cable tray and out of the cabinet through the cable manager to the PDS cross-connect facility.
   - At the PDS cross-connect facility, connect the fiber-optic cable to the lightwave-interface unit provided.
   - Delicately attach the fiber-optic cable (with cable ties) to the wall of the cable tray at the built-in cable-tie positions.
4. Behind control cabinet A of the single-carrier EPN:
   - Install the same kind (either 9823-A or 9823-B) of lightwave transceiver on cable connector at slot 2A01.
   - Connect the fiber-optic cable, coming from port carrier D of the PPN, to the 9823-type lightwave transceiver at slot 2A01.
   - Route the fiber-optic cable from the 9823-type lightwave transceiver to the cabinet cable tray and out of the cabinet through the cable manager to the PDS cross-connect facility.
   - At the PDS cross-connect facility, connect the fiber-optic cable to the lightwave-interface unit provided.
   - Delicately attach the fiber-optic cable (with cable ties) to the wall of the cable tray at the built-in cable-tie positions.
   - Coil up the surplus length of fiber-optic cable, and place the coil in the cable manager.

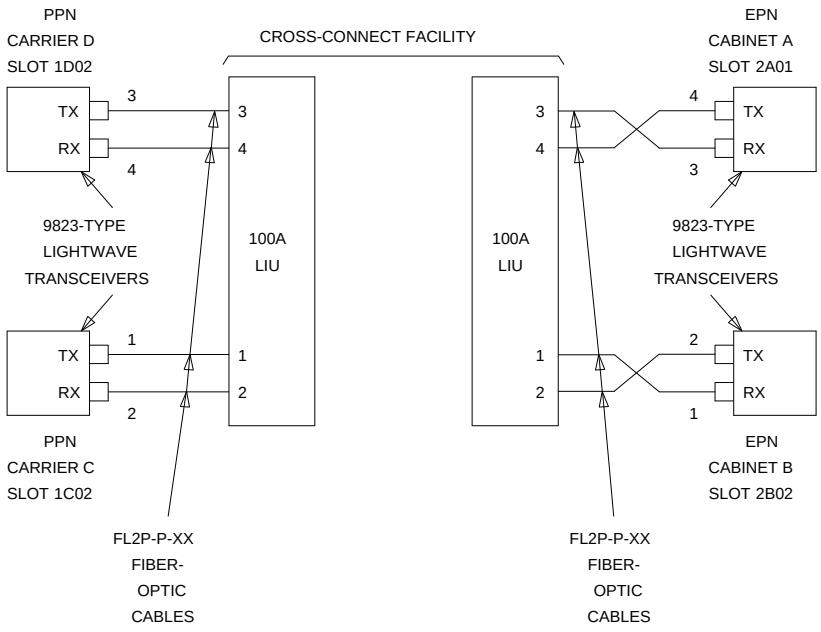

Figure 1-19. With Critical Reliability

DS1C-Remoted Cabinets

See NOTES. Digital Services 1 (DS1) facilities and associated equipment-room hardware and cabling can interconnect two port networks (PNs) located up to 100 miles apart. Although DS1 networks (PNs) located up to 100 miles apart. Although DS1 remoting always serves as a lower-bandwidth alternative to fiber remoting, DS1 remoting is especially attractive when:

- Fiber-optic cabling is unavailable to the remote site
- When the desired distance between the port networks exceeds the practical fiber limit of 25,000 feet (about 4.7 miles)
- Digital Services facilities, with enough bandwidth for interconnection, already exist between the two port networks

NOTE:
As always, these distance limitations are approximate measurements of the *actual* fiber or copper right-of-way (not of the shortest linear distance) between the two endpoints.

NOTE:
The 100-mile limit for DS1 remoting is the maximum distance between *any* two port networks in a G3r V4 system with either direct or switched port-network connections.

For example, in a *directly connected* system, a single EPN can be remoted up to 100 miles. This is because the length of the *direct* fiber connection from any port network in the local equipment room to the remote EPN is 100 miles.

However, if more than one EPN is remoted in a directly connected system, the 100-mile limit applies to any two port networks. Assuming straight cable runs, suppose that a customer wants to remote one EPN 80 miles due east and another EPN due north of the local PPN. This arrangement can only be accommodated if the second EPN resides no more than 60 miles north of the PPN. This is because the direct fiber distance between the two EPNs is also limited to 100 miles.

As another example, in *switch-connected* system with numerous port networks, one EPN might be remoted 75 miles from the switch node. If this were the case, then the maximum distance that any other EPN could be remoted would be 25 miles.

TN574 DS1C circuit packs are plugged into the expansion control carrier in the EPN cabinet and into an SN carrier in the PPN cabinet.

Digital public-network tie-trunk facilities provide the end-to end connectivity between the port networks. For either type of port network (PPN or EPN), a TN574 DS1 Converter (DS1C) circuit pack serves as the port-network interface to the DS1 facilities. As a PPN interface, a TN574 DS1C can reside in either a port carrier (in any port slot) or a switch-node carrier (in port slot ‘‘1’’ or ‘‘21’’). As an EPN interface, a TN574 DS1C can reside in an expansion control carrier (in any port slot). These connections are capable of maintaining timing (synchronism) from the PPN DS1 facility to the EPN DS1 facility.

DS1 Cabling within the Local Port Networks

See NOTE. Use the running list that accompanies the upgrade equipment to determine which cable should be connected where. The following paragraphs only provide conceptual information about wiring a DS1C interface either to an expansion interface or to a switch-node interface, not step-by-step procedures for wiring a specific G3r V4 system.

NOTE:
It is important to label every cable that you install. For details, refer to the section, *Labels for Fiber-Optic Cables*, in Appendix E of the installation manual.

See NOTE. As shown in Figure 1-20, a cable connects each DS1C either to the appropriate TN570 expansion interface (for a direct connection to another port network) or to the appropriate TN573 SN Interface (for a switched connection to another port network).

NOTE:
For the purposes of an R1V3 to G3r V4 upgrade, this cable will usually connect to a TN570 expansion interface (already installed) for a direct connection between the new PPN and the upgraded EPN.

On the DS1C side, a 4C retainer binds this shielded cable to the DS1C port connector. On the EI/SNI side, a 4B retainer binds the cable to the EI/SNI port connector. The DS1C-to-EI/SNI cable also provides a piggy-back connector enabling subsequent access to the public network. Table 1-4 lists the cable numbers and lengths for the possible connections.

Table 1-4. Numbers and Lengths of DS1C-to-EI/SNI Cables

Connection Type	Comcode Number	Length
Within same carrier	846448637	1 foot
Between two carriers in same port network	846448645	5.5 feet
Between two carriers in adjacent networks	846448652, and one 846885259 bracket	1 foot (used with two 9823As, & one 20-foot fiber-optic cable)

DS1 Cabling to the Public Network. See NOTE. Use the running list that accompanies the upgrade equipment to determine which cable should be connected where. The following paragraphs only provide conceptual information about wiring a DS1C interface to a wall-field block, not step-by-step procedures for wiring a specific G3r V4 system.

NOTE:
It is important to label every cable that you install. For details, refer to the section, *Labels for Fiber-Optic Cables*, in Appendix E of the installation manual.

Figure 1-20 also shows the cabling between various port networks and the cross-connect field where the public network is accessed. If already connected to either an expansion or switch-node interface, a DS1C circuit pack already resides either in an EPN expansion control carrier or in a PPN port carrier or switch-node carrier.

Depending on the traffic requirements between the two port networks, a 25-foot H600-348 cable extends from the piggy-back connector (on each DS1C-to-EI/SNI cable) to from one to four channel service units (CSUs). [This cable branches to four 15-pin subminiature D-type connectors (labeled ‘‘01’’ to ‘‘04’’) to make the CSU connections.] Then, in turn, the CSU(s) are connected to the wall-field block (corresponding to the equipment location of the DS1C) at port connections ‘‘8,’’ ‘‘7,’’ ‘‘6,’’ and ‘‘5’’ (in descending order).

Neglecting overhead, this wiring arrangement can provide PN-to-PN communication at the bandwidth of up to four DS1 spans (1.544 Mbps each). Between each port network’s wall field, the port networks communicate across leased lines in the public network.

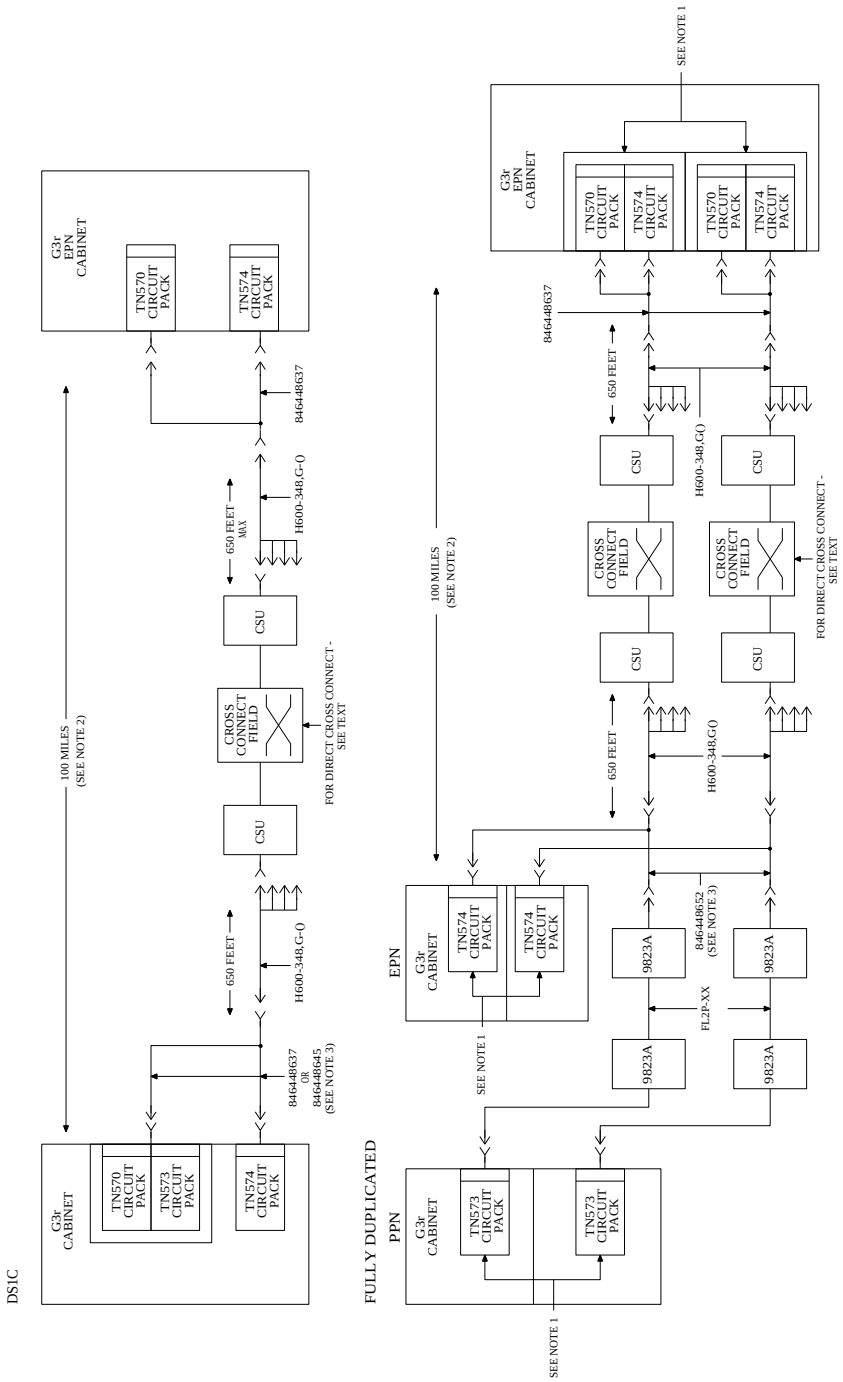

Figure 1-20. DS1 Connectivity Between Remote PNs

Install Ground Plate(s)

NOTE:
If the system being upgraded is mounted with earthquake protection, do not install the ground plates at this time.

A ground plate is required between each cabinet (see Figure 1-21). The ground plate not only provides the ground connection between cabinets, it also stabilizes the cabinets.

1. See NOTE. Behind the cabinets, replace the upper and lower covers (leave the screws loose).

   NOTE:
   The rear covers for G3r V4 control carriers may need two detents (one for the TDM/LAN cable and another for the ICC cables). Therefore, if an R1V3 XE is being upgraded to a critical-reliability G3r V4's EPN, the lower rear cover of the port cabinet in position ''B'' (serving as the duplicate expansion control cabinet) must be replaced with the new cover (846307817) so that the ICC cables and the new ground plate can be properly installed between cabinets ''A'' and ''B.''

2. Place the ground plate over the lower rear cover of the upper cabinet so that the four screws that attach the lower rear cover go through the four ground-plate keyhole slots.
3. Slide the ground plate down over the upper rear cover of the lower cabinet so that the four screws that attach the upper rear cover go through the four lower ground-plate slots.
4. Ensure that the exposed portion of the TDM/LAN cable that is between the cabinets does not get pinched.
5. Tighten all screws.

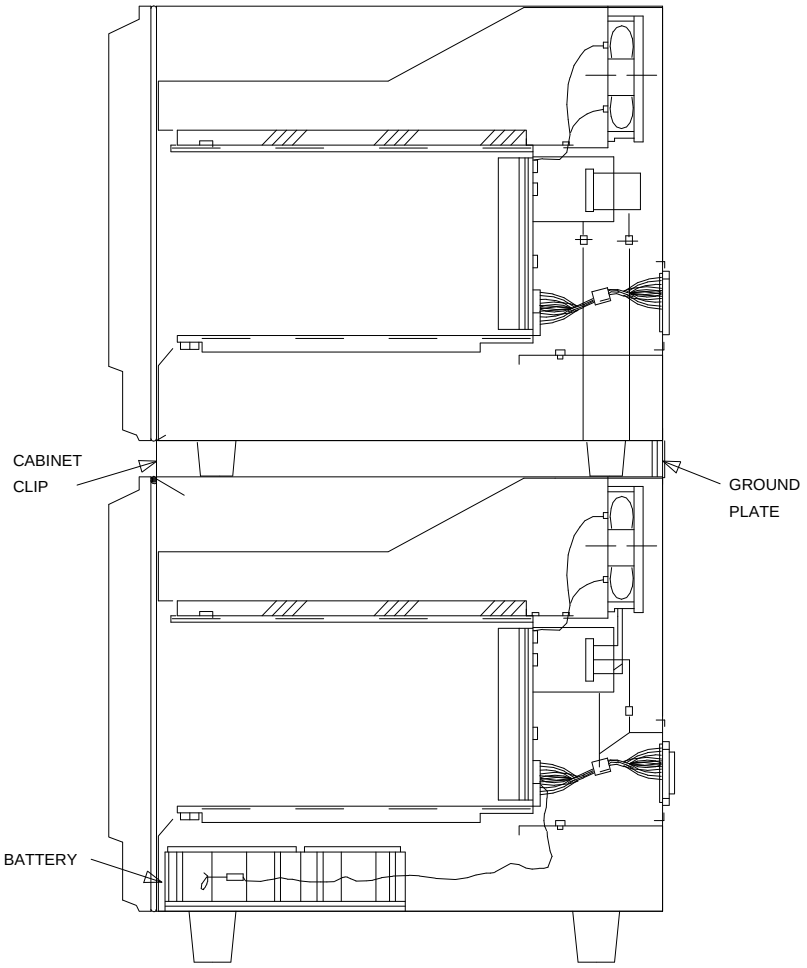

SIDE VIEW
2-CABINET PORT NETWORK

Figure 1-21. Locations of Ground Plate, Cabinet Clip, and Battery

Install Cabinet Clip(s)

NOTE:
This procedure is used only on systems without earthquake protection.

A cabinet clip, used to ground and stabilize the cabinets, is required between each cabinet.

At the front of the cabinets, install the cabinet clip between the cabinets by hooking the clip into the slot of the upper cabinet and snapping the straight leg of the clip into the slot on the lower cabinet (see Figure 1-21).

Connect Power and Grounding

1. Reconnect the 6-AWG cabinet ground wire from the ground bar in the cabinet.

   NOTE:
   A screwdriver is required to loosen and tighten the bolts that secure the ground wire to the ground bar.

2. Reconnect the coupled bonding conductor.
3. Reconnect the cabinet power cords behind each cabinet.

Verify Usable Circuit-Pack Vintages

Verify that every R1V3 circuit pack reused in the upgrade conforms to the usable vintage requirements for a G3r V4 system (see Reference Guide for Circuit-Pack Vintages and Change Notices).

Install System Access Ports

As a prerequisite for connecting various endpoints that use EIA interfaces to the G3r V4 system, install the up to eight loop-around connections for Mode 2-to-Mode 3 (and vice versa) data conversion.

From the *outgoing* perspective of the system communicating with an EIA endpoint, these loop-around connections convert Mode 3 data (circuit-switched packet data, with undefined bit rates and packet specifications) to Mode 2 data (low-speed, usually asynchronous, data at rates of 300 to 19,200 bps) by:

- Accepting Mode 3 data off the LAN bus (from the SPE) at a TN553 Packet Data Line circuit pack, where Mode 3-to-Mode 2 conversion is done
- Routing the converted data through the cross-connect field and back to a TN726B Data Line where the equivalent Mode 2 data can access the TDM bus, for subsequent routing to an EIA endpoint

The endpoints that use these EIA interfaces and, therefore, require the Mode 2-to-Mode 3 conversion include:

- DEFINITY Communications System Generic 3 Management Applications (G3-MA)
- Remote DEFINITY Communications System Generic 3 Management Terminal (G3-MT)
- Basic Call Management System (BCMS) terminal
- Call Detail Recording Unit (CDRU)/Centralized Attendant Service Plus (CAS+)
- Property Management System (PMS)
- Printers

The following figures show this loop-around configuration and how the B25A cables are cross-connected.

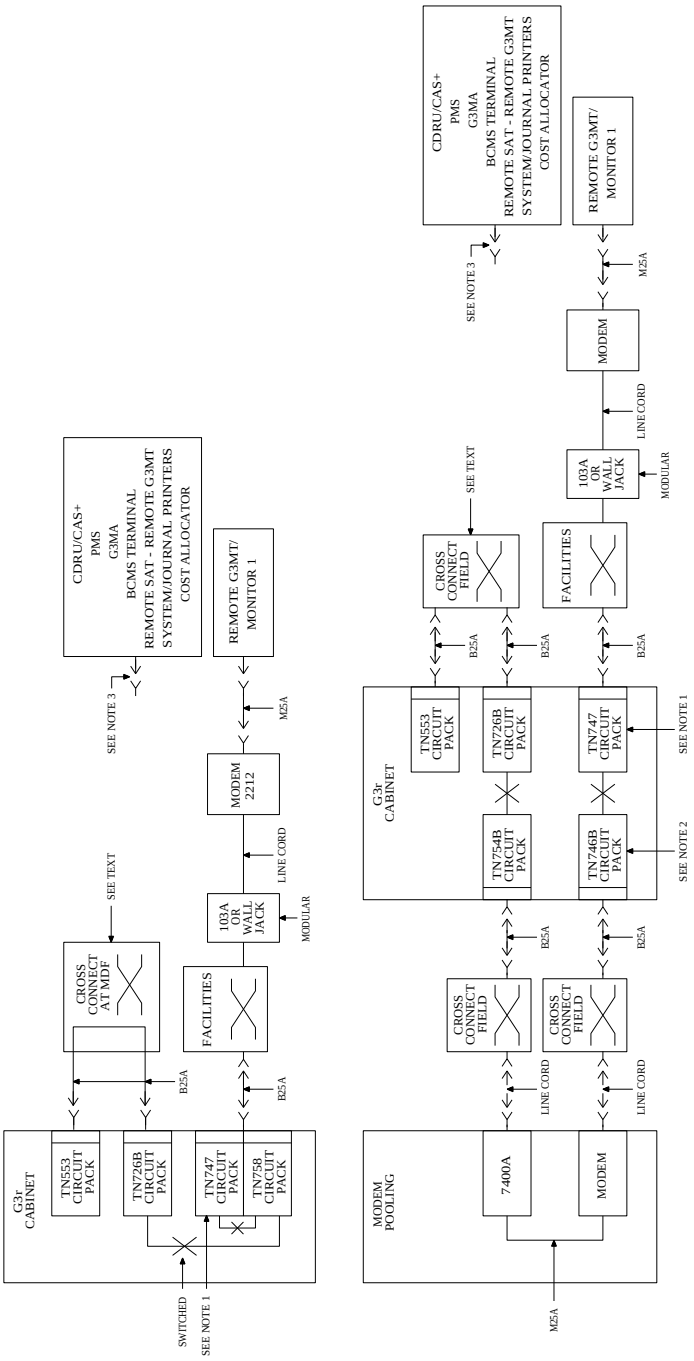

Figure 1-22. Connections: CDRU/CAS+,PMS, BCMS, Printers, G3-MA/MT

Pinouts for the TN553 and TN726B circuit packs shown cross-connected in the preceding figure are given in the table below.

Pinouts

TN553 (12 Ports)

1	26	
2	27	1
3	28	
4	29	2
5	30	
6	31	3
7	32	
8	33	4
9	34	
10	35	5
11	36	
12	37	6
13	38	
14	39	7
15	40	
16	41	8
17	42	
18	43	9
19	44	
20	45	10
21	46	
22	47	11
23	48	
24	49	12
25	50	G

TN726B (8 Ports)

1	26	Blank
2	27	
3	28	1
4	29	Blank
5	30	
6	31	2
7	32	Blank
8	33	
9	34	3
10	35	Blank
11	36	
12	37	4
13	38	Blank
14	39	
15	40	5
16	41	Blank
17	42	
18	43	6
19	44	Blank
20	45	
21	46	7
22	47	Blank
23	48	
24	49	8
25	50	Blank

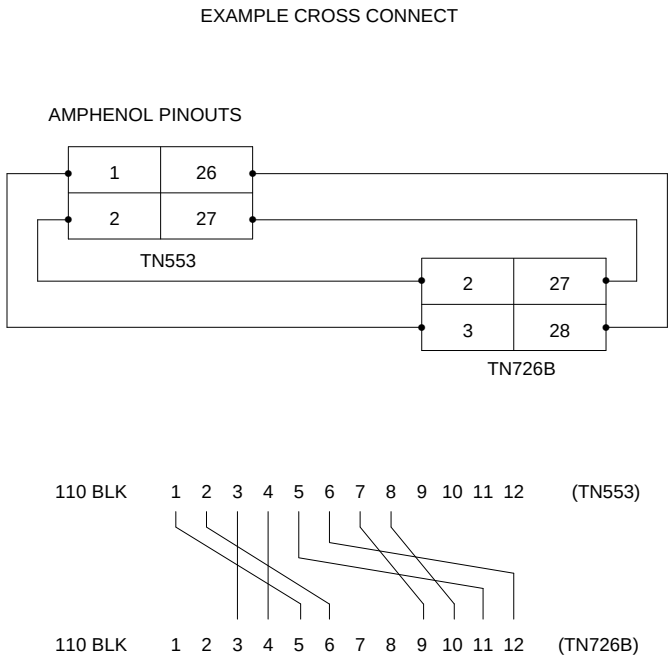

Figure 1-23. Example of Cross Connect between TN553 and TN726B

Reseat DEFINITY AUDIX System

See WARNING. If a DEFINITY AUDIX System resides in the system, reseat the AUDIX assembly to its backplane connectors.

WARNING:
Before inserting or removing a circuit pack from a cabinet, put on a wrist strap and attach its plug or clip to the cabinet's frame.

Remove Power-Failure Ground Strap

Remove the previously installed ground strap from the power-failure transfer unit.

Reboot the System

1. Connect the G3-MT to the connector labeled ''TERMINAL'' behind PPN control carrier ''A,'' or install the G3-MA according to the ''Set Up G3-MA'' chapter of *DEFINITY Communications System Generic 3 Management Applications — Operations*, 585-229-202.
2. Verify that the new G3r V4 system tape is inserted in the PPN cabinet.
3. Behind each EPN cabinet, set the circuit breaker to ON.
4. At the PPN power-distribution unit, set the main circuit breaker to ON.
5. The system now goes through the reset level 4 rebooting process, loading blank translations from the *disk* (not the new tape). Rebooting requires 5 to 11 minutes.
6. Enter **`reset system 4 tape`**. Press (RETURN). This command instructs the system to go through the reset level 4 rebooting process, loading the upgraded STS translations from the new *tape*. Rebooting requires 5 to 11 minutes.

   Refer to ''Initialization and Recovery'' and ''LED Interpretation'' chapters in *DEFINITY Communications System Generic 3r V4 Maintenance*, 555-230-105, Issue 4, for circuit-pack LED indications and screen displays that occur during system reboot.
7. Log in at the `login:` prompt on the G3-MT or G3-MA, and set the time to ensure that the system is booted properly.
8. If the system is high- or critical-reliability, enter **`status spe`**, and press (RETURN) to verify that the standby SPE is refreshed and that the standby disk is in service.
9. Enter **`restore disk [spe-a or both] full`**. Press (RETURN). This command instructs the system to write the upgraded STS translation information from memory to the disk(s).
10. Enter **`reset system 4`**. Press (RETURN). This command instructs the system to go through the reset level 4 rebooting process, loading the upgraded STS translations from the *disk*. Rebooting requires 5 to 11 minutes.

NOTE:
Certain forms have changed for G3r V4. Upgraded R1V3 translations may appear on a different form, fields may have shifted within a form, and/or the names assigned to particular fields may have changed. Refer to Table 1-1 and to *DEFINITY Communications System Generic 3r Transition Reference*, 555-230-636, and *DEFINITY Communications System Generic 3 V4 — Implementation*, 555-230-655, and make the necessary changes.

Relabel Wall Field

If not done during the installation of new PPN, relabel the wall field with the new port-network number of the upgraded G3r V4 EPN. (For an upgrade of an R1V3 system, the STS software upgrade assigned port-network number ‘‘2’’ to the upgraded EPN.)

Close Upgraded EPN Stack without Earthquake Protection and Reconnect Cables

1. Behind each EPN cabinet’s power supply, set the circuit breaker to OFF.

   NOTE:
   Powering down an EPN cabinet without powering down the PPN will set off alarms. However, these alarms should clear after power is restored to the EPN.

2. Replace all cables that were labeled and removed.
3. Install the front door on each cabinet.
4. Install a DEFINITY label on each existing port cabinet.
5. Install the top and bottom rear covers. Be sure that the correct rear covers are installed on the new J58890N-1 expansion control cabinet. Do not use these rear covers on the port cabinets.

Close Upgraded EPN Stack with Earthquake Mounting and Reconnect Cables

1. Behind each EPN cabinet’s power supply, set the circuit breaker to OFF.

   NOTE:
   Powering down an EPN cabinet without powering down the PPN will set off alarms. However, these alarms should clear after power is restored to the EPN.

2. Replace all cables that were labeled and removed.
3. Install the upper and lower rear covers with all of the screws except the screws that run along the top and bottom of the cabinet. Do not tighten the screws.

   NOTE:
   The rear covers for G3r V4 control carriers may need two detents (one for the TDM/LAN cable and another for the ICC cables). Therefore, if an R1V3 XE is being upgraded to a critical-reliability G3r V4’s EPN, the lower rear cover of the port cabinet in position ‘‘B’’ (serving as the duplicate expansion control cabinet) must be replaced with the new cover (846307817) so that the ICC cables and the new ground plate can be properly installed between cabinets ‘‘A’’ and ‘‘B.’’

4. Line up the four holes in the ground plate with the four holes at the bottom of the lower rear cover of the upper cabinet, and install the screws, but do not tighten.
5. Line up the ground plate with the top holes of the upper rear cover of the lower cabinet. Install the four screws, but do not tighten.
6. At the front of the cabinet, line up the earthquake front plate with the holes at the top and bottom of the cabinet (see Figure 1-24). Install the eight screws, but do not tighten.
7. Tighten all screws.
8. Repeat Steps 3 through 7 for the remaining cabinets.
9. Install the front door on each cabinet.
10. Install a DEFINITY label on each existing port cabinet.

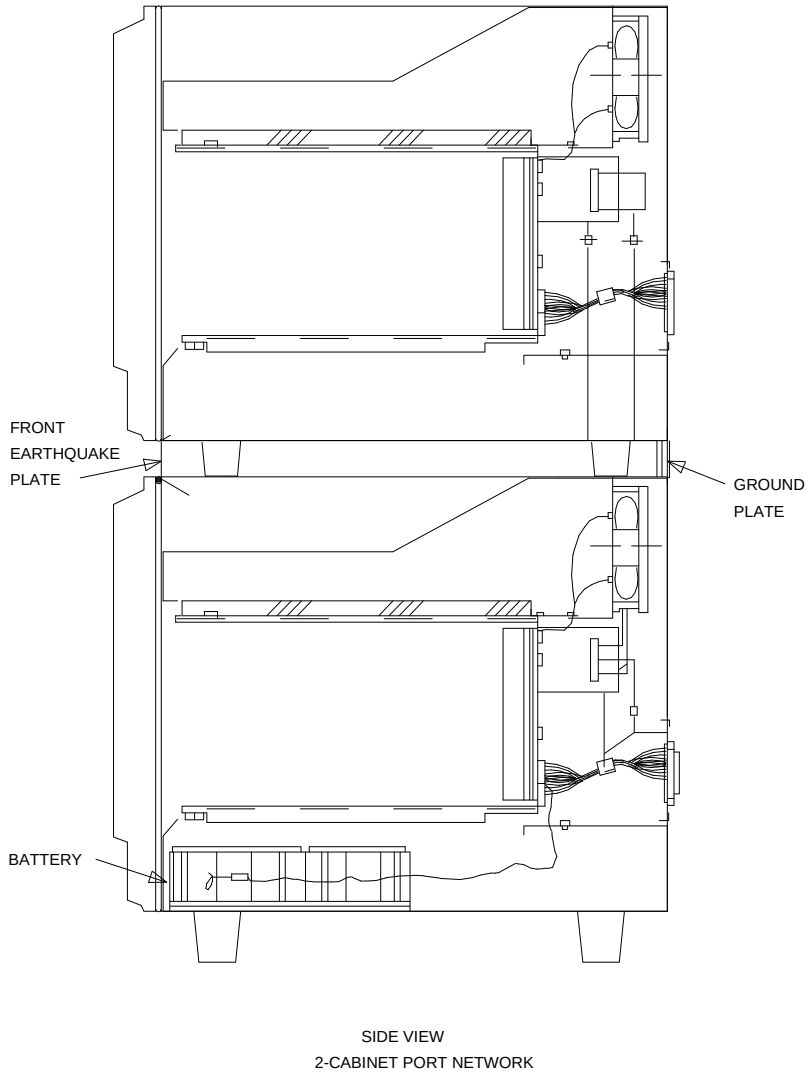

Figure 1-24. Locations of Ground Plate, Earthquake Front Plate, and Battery

Install Cable Clamps

Behind the cabinets, using screws provided, install two cable clamps on each ground plate (see Figure 1-25). These clamps are used to hold the port cables.

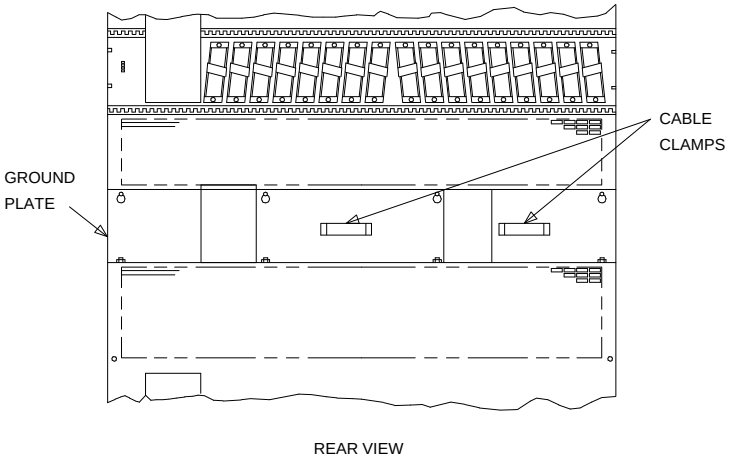

Figure 1-25. Locations of Ground Plate and Cable Clamps on Single-Carrier Cabinet

Power Up the EPN Cabinets

1. Behind each EPN cabinet's power supply, set the circuit breaker to ON.

   After about 40 seconds, EPN power and PPN/EPN communications return.

2. After power returns to the EPN and all trouble is cleared, verify that the EMERGENCY TRANSFER CONTROL switch is set to AUTO. This restores the system to the normal mode.

Retranslate Port Circuits

If port circuit packs in the R1V3 control cabinet were relocated in order to:

- Use a TN748B to replace the tone detector circuits on a TN756 Tone Detector/Generator
- Put a critical port circuit pack, requiring longer nominal battery holdover (e.g., a DS1 or an Announcement circuit pack), in a port slot
- Put TN570 Expansion Interface in port slot ''1''
- Put TN570 Expansion Interface in port slot ''2'' (for a simultaneous EPN addition)
- Put a TN755 power supply in port slots ''16'' and ''17''

verify they were retranslated during the off-site software upgrade. If not, they must be retranslated now. Refer to *DEFINITY Communications System Generic 3 V4 Implementation*, 555-230-655, for instructions on performing the retranslations.

Rerecord Announcements

The off-site STS translation upgrade did not preserve the contents of recorded announcements. Therefore, if a TN750/B Announcement circuit pack resides in the system, any announcements that were stored on the circuit pack must be rerecorded.

Run Acceptance Tests

Refer to Chapter 11 of *DEFINITY Communications System Generic 1 and Generic 3 Installation and Test*, 555-230-104, Issue 5, and perform the appropriate tests.

Register System as G3r V4

Get the serial number of the new G3r V4 PPN, and call the INADS Database Administrator at the Technical Service Center (1-800-248-1111) to register the upgraded system as a G3r V4.

Return Replaced System 75 Equipment

The System 75 equipment replaced, during the upgrade to G3r V4, should be returned to AT&T according to the requirements outlined in:

BCS/Material Logistics, MSL/Attended Stocking Locations

Methods and Procedures for Basic Material Returns

The replaced System 75 equipment includes:

- System 75 control cabinet, control circuit packs, and RMSS tape drive
- System 75 tone-clock circuit pack
- R1V3 tape cartridges
- TDM cables and AHF103 cable adapters
- AHF1 TDM bus terminators
- Lower rear cover for expansion control cabinet

Medium-Cabinet R1V3 to G3r V4

2

This chapter provides the information necessary to upgrade a medium-cabinet Release 1, Version 3 (R1V3) System 75 system to a G3r V4 system. The hardware and software involved in the upgrades and the upgrade procedures are also provided.

CAUTION:
Be careful to find the right chapter for your upgrade. Using the software- and sometimes the hardware-upgrade PEC on the customer's order, refer to Table 1 in "About This Document" for the correct chapter.

Like upgrades to G1, any new cabinets, shipped by the factory to fulfill the upgrade order, are the new "DEFINITY style" of multicarrier or single-carrier cabinets. Whereas, the System 75 R1V3 cabinet to be upgraded is an old-style medium cabinet. Although the new G3r V4 cabinet(s) and the upgraded G3r V4 cabinet will look different, they can be used together.

The following processes are required for an R1V3 to G3r V4 upgrade:

- Upgrading the hardware

  This involves adding a new multicarrier PPN cabinet, replacing the control carrier with an expansion control carrier, and replacing and adding circuit packs

- Replacing the software tape
- Upgrading the software

  This involves saving, loading, and (when necessary) reentering system translations (see Table 2-1 on page 2-7).

- Testing the upgraded system to verify proper operation

G3r V4 features and functions are listed in the *DEFINITY Communications System Generic 3 Feature Description*, 555-230-204. *DEFINITY Communication System Generic 3 V4 Implementation*, 555-230-655, provides the commands, procedures, and forms required to initialize and administer the G3r V4.

Considerations

Service Interruption

The upgrade process requires a service interruption. This service interruption must be closely coordinated with the customer and the local account team.

Communication between Equipment Rooms

For an upgrade where some of the equipment resides at a remote location, the upgrade activity will be much easier if temporary communications are established between the equipment rooms.

Contact Network Technicians

The technician for each public and private network accessed by the switch must be contacted before the upgrade begins. Otherwise, if these technicians are not aware of the service interruption caused by the upgrade, it is possible that network-access trunk facilities will be busied out at the far end.

Relocation of Port Circuit Packs

With the exception of a port circuit pack in slot ‘‘01’’ of carrier ‘‘A’’ that must be moved for a TN570 Expansion Interface, an R1V3 upgrade to G3r V4 *does not* cause port circuit packs, from the R1V3 control carrier, to be moved and manually retranslated. This is because an R1V3 is always upgraded to an EPN. So, during the cabinet upgrade to a G3r V4 EPN, a G3r V4 expansion control carrier (with 18 usable port slots) always replaces the R1V3 control carrier (with 7 usable port slots), providing a net gain of 11 port slots.

See NOTE. If a port circuit pack does reside in slot ‘‘01’’ of control carrier ‘‘A,’’ the STS software upgrade will retranslate this circuit pack to occupy an empty port slot in the new expansion control carrier.

For an upgrade to a critical-reliability G3r V4, if a port circuit pack resides in slot ‘‘02’’ of port carrier ‘‘B,’’ the STS software upgrade will retranslate this circuit pack to occupy another empty port slot in the new expansion control carrier.

Also, to provide maximum holdover for a TN750 Announcement circuit pack that did not reside in the control carrier of the R1V3 system, the STS software upgrade will relocate this circuit pack to occupy another empty port slot in the new expansion control carrier.

Also, to ensure reliable DS1 timing in the upgraded G3r V4 system, the STS software upgrade will relocate the DS1 circuit packs serving as the primary and secondary timing sources to occupy two empty port slots in the new multicarrier PPN.

Finally, when adjuncts are connected to an upgraded G3r V4, STS will locate any new interface circuit packs (including TN577 Packet Gateway, TN553 Packet Data, and TN726B Data Line) in the first available slots of the first PPN port carrier.

NOTE:
To find out where STS relocated these circuit packs, refer to the annotated ''list configuration all'' that STS provided with the new G3r V4 tape.

Usable Circuit-Pack Vintages

Every circuit pack used in the upgraded G3r V4 system must conform to the minimum usable vintage requirements for G3r V4. Those circuit packs shipped in the new G3r V4 PPN or shipped loose with the new EPN equipment should always meet the usable vintage specifications. In addition, at a presale site inspection, the Quality Protection Plan Change Notice (QPPCN) process must check the vintages of every R1V3 circuit pack that will be reused in the upgraded G3r V4 and, if necessary, replace those circuit packs that have unusable vintages. Refer to *Technical Monthly*, Reference Guide for Circuit-Pack Vintages and Change Notices, for current information about usable vintages in a G3r V4 system.

Power and Grounding

The new multicarrier PPN cabinet or any EPN cabinet added for the upgrade can be either AC- or DC-powered. If an added cabinet is powered differently from an existing cabinet, the existing cabinet does not have to be converted since mixed power configurations are allowed. However, the system's power and grounding must be modified so that the AC-powered cabinet is grounded to the same single-point ground bar as the DC-powered cabinet (see Figure 2-1).

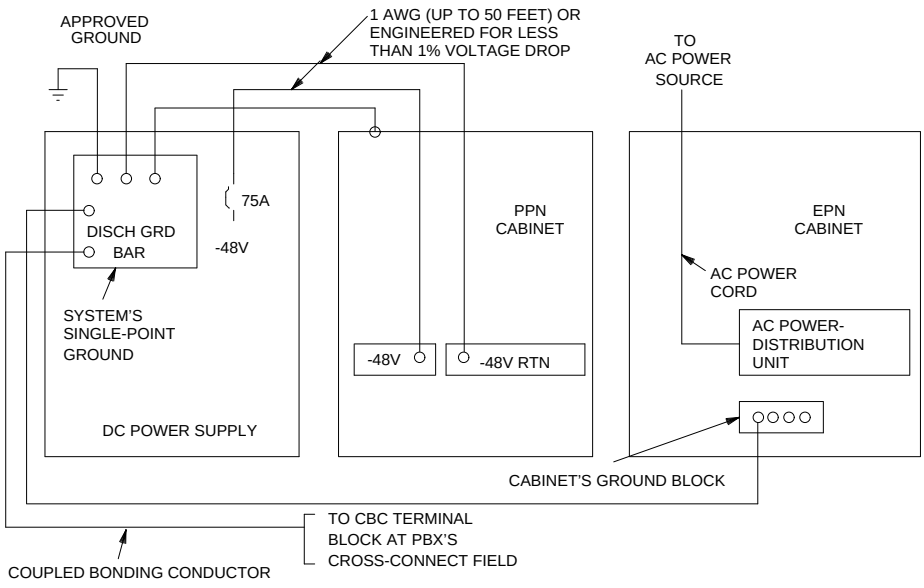

Figure 2-1. Typical Power and Grounding Arrangement for a Mixed AC/DC-Powered Multicabinet Configuration

See NOTE. If a new AC-powered cabinet is to be added, a separate AC receptacle is provided to support the new cabinet. This AC receptacle must not be shared with any other equipment and must not be controlled by a wall switch. For the convenience and safety of equipment-room personnel, the receptacle should not be located under the cross-connect field.

NOTE:
In contrast to the AC power that is likely to be currently available in an R1V3 equipment room, the new AC-powered PPN added for a G3r V4 upgrade uses 4-wire, 30A, 208 VAC power. Whereas, the R1V3 medium cabinet used 3-wire, 50A, 115 VAC power.

If a new DC-powered cabinet is to be added, refer to *DEFINITY Communications System Generic 1 and Generic 3 Installation and Test*, 555-230-104, Issue 5, for DC power and grounding requirements.

116A Isolator

Each G3-MT connected to a DC-powered cabinet, via the asynchronous Electronic Industries Association (EIA) RS-232 interface (behind a PPN control carrier or behind an EPN expansion control carrier), requires a 116A isolator. The isolator is inserted at the RS-232 interface between the G3-MT and the interface connector to isolate grounding between the system and external adjuncts.

Power-Failure Stations

During routine switch operation, the ground for the power-failure stations is derived from the system's auxiliary cable. This ground will be disconnected during the upgrade, thus disabling the power-failure stations. Therefore, a ground strap will have to be run to the power-failure transfer panel. This strap should be connected shortly after power is removed and then disconnected just before power is restored to the upgraded system.

To minimize downtime during the G3r V4 upgrade, power-failure transfer equipment should be tested and, if need be, repaired before the hardware upgrade begins.

Software

The G3r V4 software and translations will be saved on the TN1656 Tape Drive circuit pack. This tape format is not compatible with the format of either R1V3 high capacity minirecorder (HCMR) or removable mass storage subsystem (RMSS) tapes.

The translations in the R1V3 system must be copied to a spare tape and sent to Software Technical Support (STS) to be converted and written to a G3r V4 tape. This process takes two weeks. The G3r V4 tapes (including one with translations) must be on-site before the upgrade can begin. Two tapes (one system tape and one backup tape) must always be retained on site with the R1V3 system.

After a software upgrade, several features require special attention because of form changes or potential naming conflicts in the upgrade process. Most of these changes and conflicts are related either to a software upgrade from standard ACD to Call Vectoring or to changes in the ARS/AAR features to compensate for increasing uncertainty in the North American numbering plan. Table 2-1 contains a list of implementation forms that are either new or changed for G3r V4.

After the upgrade, the Software Associate should check these forms to ensure that the upgraded translations are appropriate for the customer's needs. Refer to *DEFINITY Communications System Generic 3r Transition Reference*,

555-230-636, and *DEFINITY Communications System Generic 3 V4 Implementation*, 555-230-655, for information to make any required changes.

Table 2-1. Changed/New Administration Forms for G3r V4

From R1V3	To G3r V4
ARS fnpa	ARS Digit Analysis
ARS hnpa	ARS Digit Analysis
Allowed Call List	Toll Analysis
Code Restriction fnpa	Toll Analysis
Code Restriction hnpa	Toll Analysis
Interexchange Carrier	Interexchange Carrier
Permanent Switched Calls	Administered Connections
RNX Table	AAR Digit Analysis
Ten-Seven Digit Conversion	ARS/AAR Digit Conversion
None (Note)	Alias Station
None	Alphanumeric Dialing
None	Call Vector
None	Signaling Group
None	Access Endpoints
None	Vector Directory Number

NOTE:
"None" represents a new form for G3r V4.

Alarm Connection

See NOTE. The AUXILIARY connector on System 75 systems had appearances for Alarm Monitors 1M, 1m, 2M, 2m, 3M, 3m, and 3W. Whereas, the AUXILIARY connector on a DEFINITY G3r V4 PPN only has appearances for 1M and 1m. If the system being upgraded used the other alarm-monitor appearances, they can either be distributed to the AUXILIARY connector on a G3r V4 EPN, or ‘‘ganged’’ so that several external devices share the same appearance. The alarms can also be accommodated by paralleling them to the above connections.

NOTE:
When several external devices are ganged to the same appearance, each device loses its individual identity. An alarm on a shared appearance only denotes that one of several devices reported a problem. Subsequent maintenance effort is needed to determine which device reported the problem and the nature of the problem.

The control circuit pack behind the AUXILIARY connector detects external alarms with a ground-detector chip. Therefore, to gang several external devices, every device must be able to return a true relay ground closure to the AUXILIARY connector. Alternatives, such as a TTL low driver, are inadequate.

Software-Translation Upgrade

The G3r V4 system software and translations will be saved on the TN1656 Tape Drive circuit pack. This tape format is not compatible with either the R1V3 HCMR- or RMSS-formatted tapes.

During an upgrade from an R1V3 to a G3r V4, STS must convert the R1V3 translations and write them to a G3r V4 tape. To enable this tape conversion, replace the system tape with a spare R1V3 tape. (Spare R1V3 tape cartridges can be acquired from the QPPCN before the upgrade.) Then, copy the current R1V3 translations to the spare tape, and overnight mail this tape to STS. Also, put the original system tape back into the system.

If possible, the customer should put a freeze on any new translations while the spare tape is being converted. If not, be sure that the customer's switch administrator keeps detailed records of any translation changes made during that interval. These records will facilitate the reassignment of any changes on the G3r V4 tapes after the upgrade.

The new G3r V4 tapes (one with the converted translations, two if duplicated and the rest blank) must be on-site before the upgrade begins.

When an R1V3 system is upgraded to a G3r V4, the tape-conversion software will assign port network "1" to the new G3r V4 PPN and port network "2" to the EPN derived from the R1V3 cabinet.

Save Translations

1. Log in at the Manager I on the R1V3.
2. Enter **`save translation`**. Press [RETURN]. This command instructs the system to write all translation information from memory to the tape.
3. If the system is equipped with a TN750/B Announcement circuit pack, enter **`display announcements`**, and press [RETURN].

   If administered recorded announcements are listed, enter **`list configuration software-version`**, press [RETURN]. Check Page 2 of this form to find out when the announcements were last saved, and ask the customer whether any announcements have changed since then.

   If so, the current announcements can be saved using the save announcements command. Enter **`save announcements`**, and press [RETURN].
4. Remove the system tape, install the backup tape, and wait for the tape to retension.
5. Enter **`save translation`**. Press [RETURN].
6. Enter `save announcements` if appropriate. Press [RETURN].

Make Source Tape for Upgrade

A spare R1V3 tape must be acquired from the QPPCN before performing the following steps. There must always be two system tapes on site with the System 75. Do not send the system or backup tape to STS.

After performing the previous procedures, copy the R1V3 translations to the spare tape that will be used to make the G3r V4 tapes. Perform the following procedures:

1. Remove the backup tape, install the spare tape, and wait for the tape to retension.
2. See NOTE. Enter **`save translation`**. Press (RETURN). This command instructs the system to write all translation information from memory to the tape.

   NOTE:
   The off-site STS translation upgrade does not preserve the content of recorded announcements. Therefore, during the upgrade, any announcements stored on a TN750/B circuit pack must be rerecorded.

3. Remove the source tape.
4. Insert the system tape.

The tape removed in Step 3 should be mailed (with next-day delivery) to STS for use in making the G3r V4 tapes.

System Upgrades

There are many configurations of medium-cabinet R1V3 System 75s in the field. In terms of both hardware and software, each system can have a unique configuration. However, to simplify G3r V4 upgrades, the existing cabinet is always upgraded to an EPN. A new multicarrier cabinet would then always serve as the PPN. It is also possible that two existing R1V3 systems could be upgraded as two EPNs in the same G3r V4 system.

This section gives a sequential list of the steps required to upgrade the R1V3 system.

R1V3 Medium to 2-Cabinet G3r V4 with Standard Reliability

See NOTE. Refer to *DEFINITY Communications System Generic 1 and Generic 3 Installation and Test*, 555-230-104, Issue 5, to install the new PPN cabinet.

NOTE:
During the wall-field wiring of the PPN installation, the wall field can also be relabeled with the new port-network number of the R1V3 system to be upgraded. (For an R1V3 system, the STS software upgrade assigned the upgraded EPN as port network ‘‘2.’’)

If a second EPN is being added, refer to *DEFINITY Communications System Generic 1 and Generic 3 Installation and Test*, 555-230-104, Issue 5, to install the new EPN.

Upgrade Cabinet

The existing cabinet is always upgraded to an EPN. Upgrade the cabinet using the following procedures.

A medium-cabinet System 75 R1V3 is upgraded to a standard-reliability G3r V4 EPN by:

- Removing the tape-drive unit
- Removing the TDM cables, cable adapters, and terminators
- Removing the control carrier from position ‘‘A’’
- Installing the J58890AF expansion control carrier in position ‘‘A’’
- Installing the new TDM/LAN cables and terminators
- Adding the G3r V4 circuit packs to the EPN
- Restructuring the port circuits as required

Prerequisite Hardware

The equipment in Table 2-2 *must* be on-site before the upgrade begins. Ensure that the tapes are G3r V4 tapes.

To place a claim for missing equipment, as part of the Streamlined Implementation process, call "1-800-772-5409," and respond to the call prompter.

Table 2-2. Required Hardware

Equipment	Description	Quantity
PEC 6300-07X	Processor Port Network	1
J58890AF	Expansion Control Carrier	1
106647985	TN775B Maintenance	1
103557211	TN768 Tone-Clock	1
or		
103557336	TN780 Tone-Clock	1 (Note 5)
or		
106706955	TN2182 Tone-Clock	1 (Note 6)
103281788	TN570 Expansion Interface	2 (Note 1)
J58890TF	Tape Cartridge	2
105691158	CFY1 Current Limiter	1
63300A	FL2P-P-XX Fiber Cable	1 (Note 2)
103960456	ZAHF4 TDM/LAN Bus Terminator	2
J58890A L20	WP-91716 L6 TDM/LAN Cable	max 3
J58890A L21	WP-91716 L7 TDM/LAN Cable	1 (Note 3)
106455348	9823-A Lightwave Transceiver	2 (Note 4)
or		
106455363	9823-B Lightwave Transceiver	2 (Note 4)
105731202	176A Apparatus Blank (for removed tape drive)	1
846309466	DEFINITY Label	1

NOTE:

1. Two TN570s are required for a standard-reliability switch with two port networks. One TN570 is shipped loose with the EPN equipment. The factory has installed the other TN570 in the new PPN.
2. Two cables are required if the EPN and PPN are remotely separated.
3. L7 required if the R1V3 system is equipped with a ‘‘D’’ carrier.
4. Shipped loose with the EPN equipment only. One lightwave transceiver is installed in the EPN, and one in the PPN.
5. Use TN780 as Tone-Clock for Stratum 3 timing. Also required with the TN780 are the TN748, and TN744 for tone-detection.
6. The TN2182 Tone-Clock provides tone detection, tone generation, and tone-clock in one circuit pack, and it replaces the TN756, TN768, and TN780 circuit packs, while providing the same functionality as the TN748 and TN420 circuit packs.

Required Tools

The following tools and items may be required during the upgrade:

- High-intensity flashlight or AC drop light
- 3/8-inch flat-blade screwdriver with a 10-inch shank (minimum)
- 5/16-inch and 1/4-inch sockets with a ratchet and 10-inch extension
- Power screwdriver (optional)
- Long-nose pliers to disconnect grounding straps and straighten backplane pins
- Static-proof or original circuit-pack packaging for transporting circuit packs
- Labels for identifying the port circuit packs and cables attached to the rear of cabinets
- Receptacle for holding approximately 100 self-tapping screws
- 12 spare #12 and #10 self-tapping screws
- 4 spare carrier grounding straps
- Authorized wrist grounding strap
- Repair kit for backplane pins (KS-22876 L2 or equivalent)
- One copy of each of the following manuals:
  - *DEFINITY Communications System Generic 3r V4 Maintenance*, 555-230-105, Issue 4

— *DEFINITY Communications System Generic 3 V4 Implementation*, 555-230-655

Preventive Maintenance

During the G3r V4 upgrade, follow routine preventive maintenance procedures on the system to be upgraded. For information about the procedures and necessary equipment, refer to the "Preventive Maintenance'' section in *DEFINITY Communications System Generic 3r V4 Maintenance*, 555-230-105, Issue 4.

Verify System Status

Before proceeding, the system should be examined for alarms, and every problem should be corrected. The system must be alarm-free.

Label Cables

To make reconnecting the cables simpler and more reliable, label both ends of the connector cables associated with the carrier to be removed (if not already labeled).

Shut Down DEFINITY AUDIX System

1. See WARNING. If a DEFINITY AUDIX System resides in the system to be upgraded, shut down the AUDIX assembly and allow the disk to completely spin down.

   WARNING:
   Neglecting to shut down an AUDIX assembly before powering down the system cabinet where it resides can damage the AUDIX disk.

2. See WARNING. To avoid an unexpected AUDIX reboot after an unplanned switch reboot, unseat the AUDIX assembly from its backplane connectors.

   WARNING:
   Before inserting or removing a circuit pack from a cabinet, put on a wrist strap and attach its plug or clip to the cabinet's frame.

Power Down R1V3 System

See CAUTION. At the power-distribution unit, set the main AC circuit breaker to OFF.

CAUTION:
Powering down the control cabinet will cause important system data, such as BCMS data, records of queued ACD calls, Automatic Wakeup requests, and Do Not Disturb requests to be lost. Refer to DEFINITY Communications System Generic 1, Generic 3i, Generic 3i-Global, and Generic 3i V4 Maintenance, 555-204-105, Issue 7, for information about preparing the system for a power down. BCMS data cannot be stored to or retreived from tape.

Install Power-Failure Transfer Ground Strap

CAUTION:
To avoid contaminating single-point ground, do not connect the ground strap while the system is powered up.

1. Connect a strap's lead either to pin 49 of the connecting block or to pin 49 of the CAP (cable access panel) associated with the power-failure transfer panel.
2. Route the other lead to an approved ground source.
3. Connect the lead to the approved ground source.

Remove Door and Panels and Disconnect Cables

1. Remove the front door from the cabinet (if desired).
2. With the cable retainer in front of you and the part number visible (4B or 4C), locate the slot that is almost vertical. (This slot is adjacent to the part number.) Insert a flat-blade screwdriver with a wide blade (1/4-inch recommended) into the slot, and twist the screwdriver. The retainer will snap open easily so that the cable can be removed.
3. At the cabinet, disconnect previously labeled cables associated with the carrier to be removed.
4. Behind the cabinet, remove all of the back panels. (Two different types of screws hold the back panels to the cabinet. The #10 screws can be removed with a screwdriver or a 1/4-inch socket. The #12 screws can be removed with a screwdriver or a 5/16-inch socket.)

Remove Circuit Packs from Control Carrier A

1. To ensure that circuit packs and power units in the ‘‘A’’ carrier are properly replaced, label each component with its slot number.
2. Disconnect the power cords from the power units in the ‘‘A’’ carrier.
3. See WARNING. Remove all circuit packs and power units from carrier ‘‘A.’’ Store the circuit packs in the static-proof packaging.

   WARNING:
   Before inserting or removing a circuit pack from a cabinet, put on a wrist strap and attach its plug or clip to the cabinet’s frame.

4. Remove the circuit-pack blanks from slots that do not contain circuit packs.
5. Remove the front trim plate from the ‘‘A’’ carrier by pulling straight off.

Remove Tape Drive

NOTE:
The tape drive does not have to be removed at this time. It can be disconnected now, and then removed at a later date when time is less critical.

1. Remove tape.
2. Disconnect the AHF4 cable adapter from behind slot ‘‘07’’ of control carrier ‘‘A’’ (see Figure 2-2).
3. Open the snap connectors to remove the adapter from the tape drive’s ribbon cable. Route the cable back to the tape drive and remove it. (There are two cable clamps on the cabinet’s side panel. Use a screwdriver to unsnap them.) Neither the cable nor the adapter will be used in the upgraded EPN cabinet.
   - On the HCMR tape drive, disconnect the power supply from the front of the unit. Then, remove the screws (at the rear of the unit) that attach the drive to the chassis, and slide the tape drive out the front of the cabinet.
   - On the RMSS tape drive, disconnect the red and black wire. Remove the faceplate. Then, remove the screws that hold the unit to the chassis. Slide the drive out the front of the cabinet.
4. Coil the red and black wire in an out-of-the-way position in the cabinet.
5. Install the 176A apparatus blank over the empty space left by the removal of the tape drive.

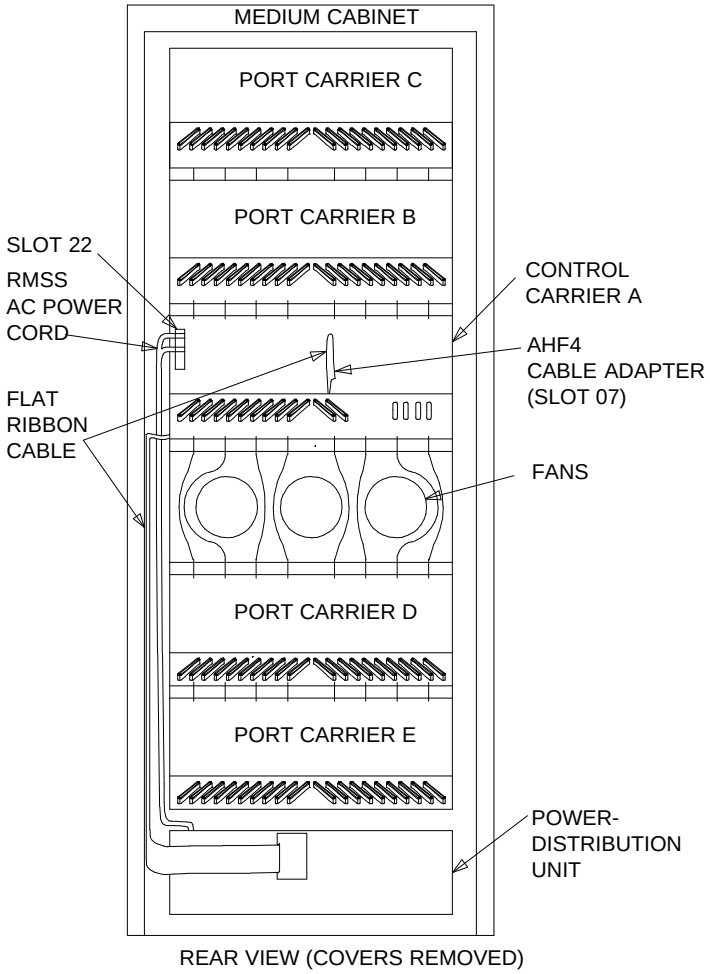

Figure 2-2. R1V3 System Cabinet

Remove Control Carrier A

1. See CAUTION and NOTE. Remove the TDM cable and AHF3 cable adapters from between the ‘‘A’’ and ‘‘B’’ carriers (see Figure 2-3). They will not be reused.
2. See CAUTION and NOTE. Remove the TDM cable and AHF3 cable adapters from between the ‘‘A’’ and ‘‘D’’ carriers. They will not be reused.

CAUTION:
When removing the cable adapters, be careful that none of the short pieces of shrink tubing come off the four corner pins of the pin-field

block. Otherwise, when the new equipment is connected, -48 volts could short to ground.

NOTE:
Before disconnecting each cable adapter, note its position.

3. Disconnect one end of the eight ground straps (between the ‘‘A’’ and ‘‘B’’ carriers) from the ‘‘A’’ carrier (see Figure 2-4). These straps will be reconnected to the new ‘‘A’’ carrier.
4. Disconnect one end of the eight ground straps (between the ‘‘A’’ and ‘‘D’’ carriers) from the ‘‘A’’ carrier. These straps will be reconnected to the new ‘‘A’’ carrier.
5. Slide the latch up, and disconnect the ‘‘P1’’ (small 9-pin) connector and the ‘‘P2’’ (large 37-pin) connector from the ‘‘A’’ carrier (see Figure 2-5). Move the cables into a position where they will not interfere with removing the carrier.
6. Remove the fan trim plate by pulling straight off.
7. Clean or replace the air filter (403326820) if necessary.
8. In front of carrier, remove the four screws (top two first) holding the ‘‘A’’ carrier to the cabinet frame. Use a long-handle screwdriver or 5/16-inch socket with a 10-inch extension.
9. See CAUTION. Slide the carrier forward 1 to 2 inches; then, from the back, be sure that no cables or wiring harnesses are caught on the cabinet/carrier framework.

CAUTION:
Cables and wiring harnesses can be damaged if they catch on the framework and if too much pressure is applied in removing the carrier.

10. Remove the carrier by sliding it out the front of the cabinet.

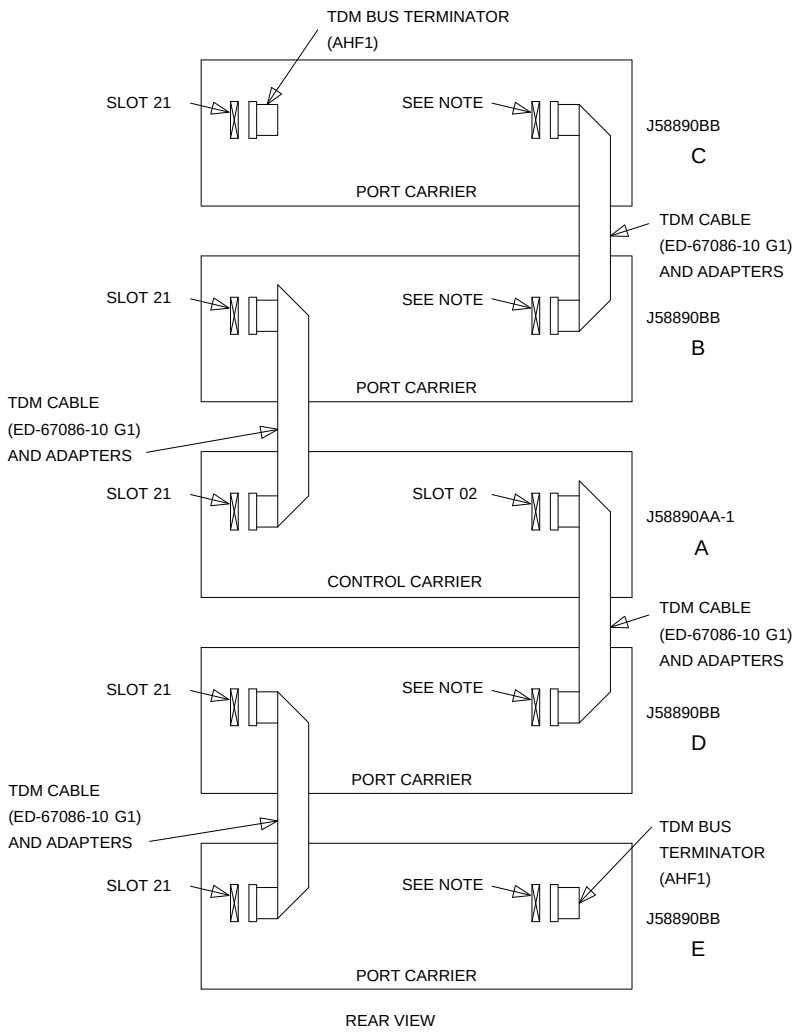

NOTE:

ON PORT CARRIER J58890BB-1, CONNECT THE TDM CABLE OR TDM TERMINATOR TO SLOT 02.

ON PORT CARRIERS J58890BB-2 AND -3, CONNECT THE TDM CABLES TO SLOT 01.

Figure 2-3. TDM Connections for R1V3 System

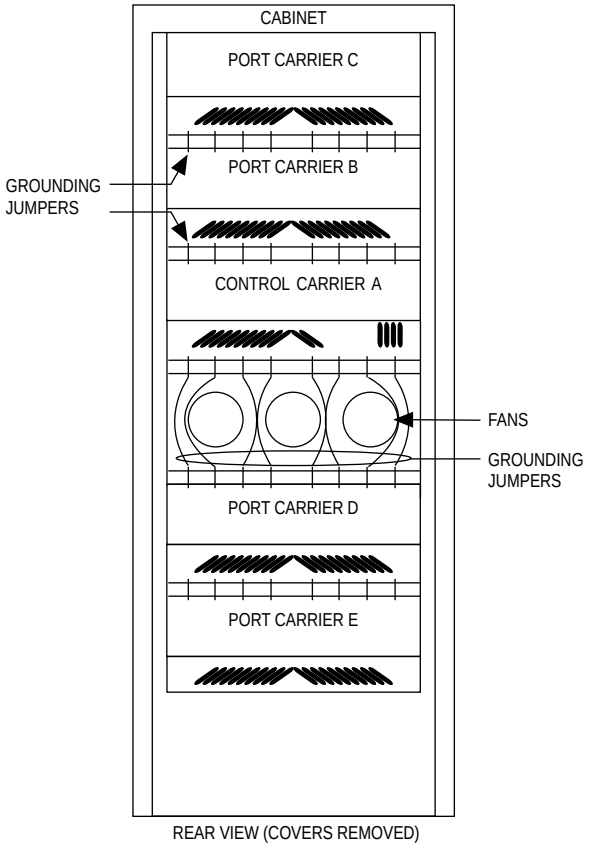

Figure 2-4. Locations of Grounding Jumpers

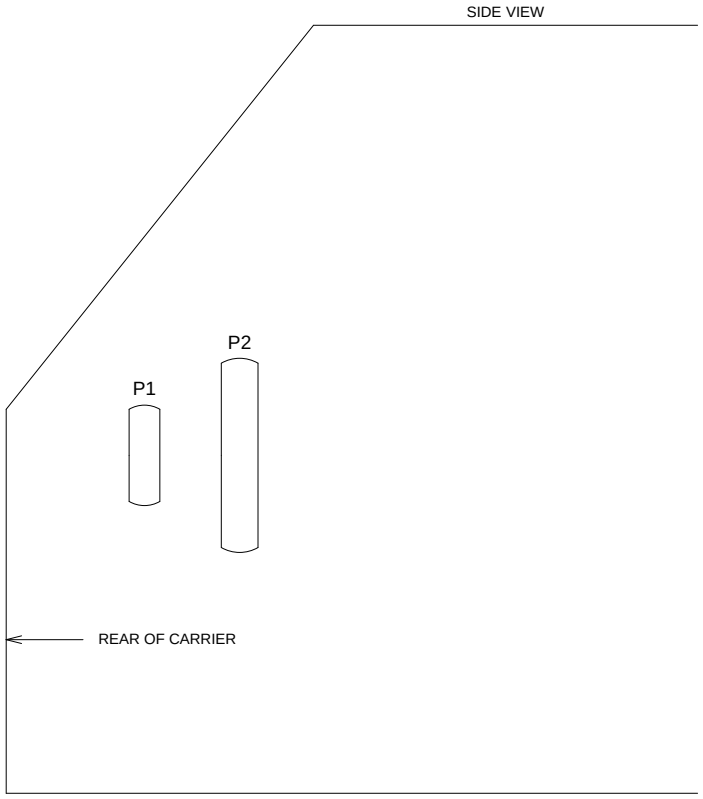

Figure 2-5. Location of P1 and P2 Connectors on System 75 Carrier

Prepare New Expansion Control Carrier A

1. Visually inspect the new carrier for any damage. Verify that the backplane pins are not bent.
2. Place the expansion control carrier on the floor so that the rear of the carrier faces up.
3. Install the CFY1 current limiter (CURL) on the "A" carrier to the pin-field block marked "CURL." The CURL is inserted with the components on the left side as viewed from the rear.
4. At the rear connector panel, determine which connectors will have a cable attached, and install a 4B cable retainer on each of these connectors.

Install New Expansion Control Carrier A

1. Install the J58890AF expansion control carrier in position ‘‘A’’ by lining up the carrier with the screw holes in the cabinet. Ensure that the power cords are properly placed in the slots at the sides of the carrier.
2. See CAUTION. Fasten the carrier into position with four self-tapping screws saved from the removal of the old carrier.

   CAUTION:
   Carefully realign the threads on the self-tapping screws by turning them clockwise a turn or two before tightening them to avoid stripping the threads out of the framework.

3. Connect the ‘‘P2’’ and ‘‘P1’’ (large and small) connectors to the ‘‘A’’ carrier (see Figure 2-6). If necessary, to get enough slack in the cables, cut the tie wrap holding the intercabinet cables from the upright in the area being installed. Snap the connector lock into place to ensure that the connection is properly made.
4. Connect the eight ground straps from the ‘‘B’’ carrier to the new ‘‘A’’ carrier (see Figure 2-4). These straps were left connected to the ‘‘B’’ carrier when the old ‘‘A’’ carrier was removed.
5. Connect the eight ground straps from the ‘‘D’’ carrier to the new ‘‘A’’ carrier (see Figure 2-4). These straps were left connected to the ‘‘D’’ carrier when the old ‘‘A’’ carrier was removed.
6. See NOTE. For an AC-powered expansion control carrier, install the two new carrier-ground straps. One strap connects ground point ‘‘1’’ to the A-carrier frame (on the right side), and the other connects ground point ‘‘8’’ to the A-carrier frame (on the left side).

   NOTE:
   DC-powered carriers do not use these carrier-ground straps.

7. Connect the new TDM/LAN cable (WP-91716 L7) between the ‘‘A’’ and ‘‘D’’ carriers (see Figure 2-7 and Table 2-3). The cable is connected to the ‘‘A’’ and ‘‘D’’ carriers at the pin-field blocks marked TDM on the right side of each carrier.

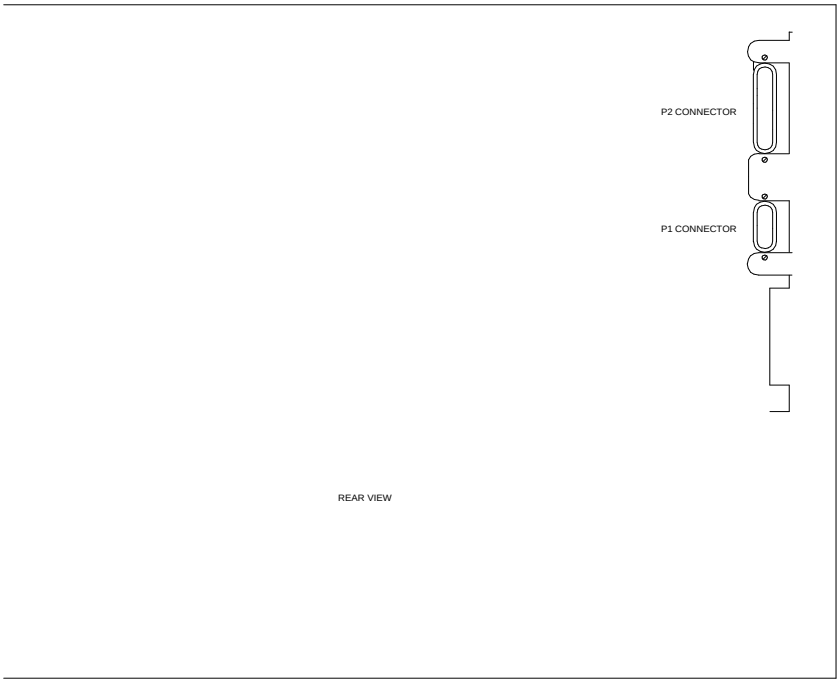

Figure 2-6. Location of P1 and P2 Connectors on DEFINITY Carrier

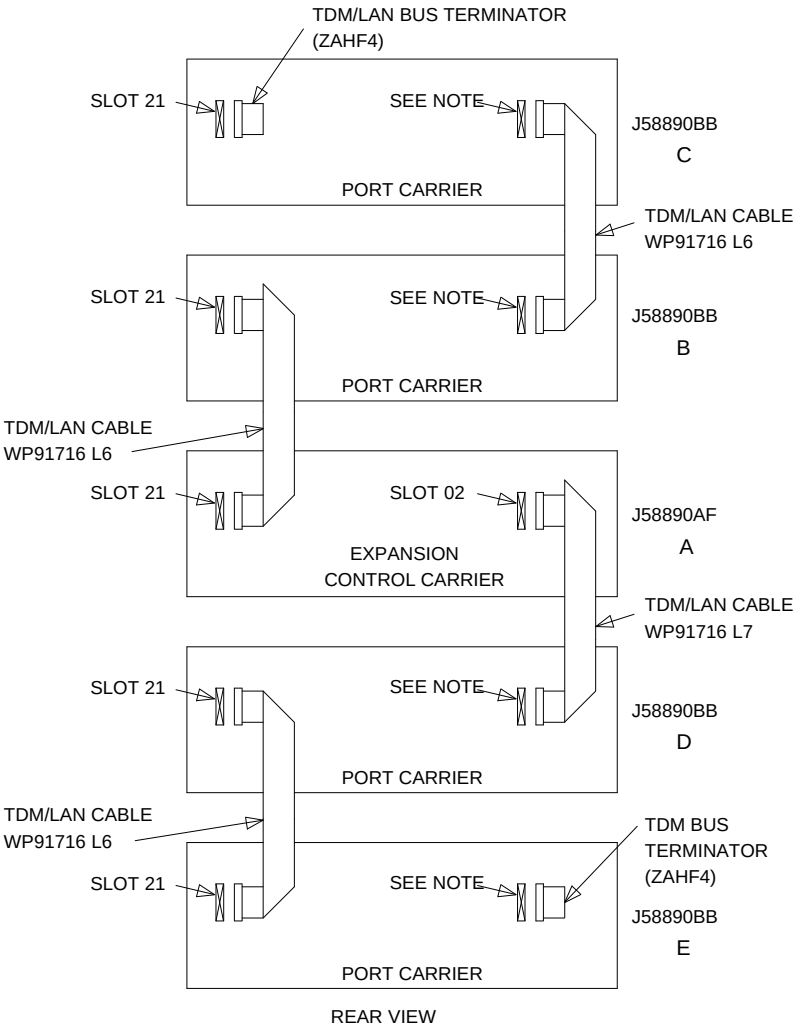

NOTE:
ON PORT CARRIER J58890BB-1, CONNECT THE TDM CABLE OR TDM TERMINATOR TO SLOT 02.
ON PORT CARRIERS J58890BB-2 AND -3, CONNECT THE TDM CABLES TO SLOT 01.

Figure 2-7. TDM/LAN Connections for G3r V4 EPN

Table 2-3. TDM/LAN Connections

"J" Number	Carrier Type	LHS Slot	RHS Slot
J58890BB-1	Port	21	02
J58890BB-2	Port	21	01
J58890BB-3	Port	21	01
J58890AF	EPN Control "A"	21	02

8. Connect a new TDM/LAN cable (WP-91716 L6) between the "A" and "B" carriers (see Figure 2-7 and Table 2-3). The cable is connected to the "A" and "B" carriers at the pin-field blocks marked TDM on the left side of each carrier.
9. See CAUTION and NOTE. Remove the TDM cable and AHF3 cable adapters from between the "B" and "C" carriers (see Figure 2-3). Install a new WP-91716 L6 TDM/LAN cable. The new cable is connected to the same pin-field blocks that the old cable was disconnected from (right side).
10. See CAUTION and NOTE. Remove the TDM cable and AHF3 cable adapters from between the "D" and "E" carriers (se Figure 2-3). Install the new WP-91716 L6 TDM/LAN cable. The new cable is connected to the same pin-field blocks that the old cable was disconnected from (left side). (See Figure 2-7 and Table 2-3.)

CAUTION:
When removing the cable adapters or terminators, be careful that none of the short pieces of shrink tubing come off the four corner pins of the pin-field block. Otherwise, when the new equipment is connected, -48 volts could short to ground.

NOTE:
Before disconnecting each cable adapter or terminator, note its position.

11. See previous CAUTION and NOTE. Replace the existing TDM bus terminators (AHF1) with the new ZAHF4 bus terminators. (See Figure 2-7 and Table 2-3.)
12. Install the front trim plates on the "A" carrier. Install the fan trim plate.
13. Peel the old decal strip (designation strip) from the trim plates. Then, install the new decal strip at the bottom of the trim panel.

14. Install the new connector-panel decal on the rear connector panel.
15. Install the 631-type power units (removed from R1V3) into the ‘‘A’’ carrier. Three different pairs of AC power units have been developed. They are the 631AR1 and 631BR1, the 631WA1 and 631WB1, and the 631DA1 and 631DB1. Since power units from the newer pairs are downward compatible with the older ones, power units from different pairs can reside in the same carrier.

    However, do not interchange the physical locations of the units. The 631AR1, 631WA1, or 631DA1 are installed in the left side, while the 631BR1, 631WB1, or 631DB1 are installed in the right side (see Figure 2-8).
16. If the expansion control carrier contains a 631BR1 or 631WB1 power unit, install the previously removed TN736 power unit in port slots ‘‘18’’ and ‘‘19’’ of the carrier (adjacent to the 631BR1 or 631WB1). If the system is equipped for neon message waiting, a TN752 or TN755 power unit must be used.

    NOTE:
    A TN736 is not required when a 631DB1 power unit is used in a J58890AF expansion control carrier or in a J58890BB-2 or -3 port carrier. It is always required in the J58890BB-1 port carrier, regardless of which 631 power unit is provided. Use a TN752 or TN755 if the system is equipped with neon message waiting.
17. Connect the power cords to the power units. The power cords are the white cables equipped with plugs that are run through the slots in the front of each carrier (see Figure 2-9).

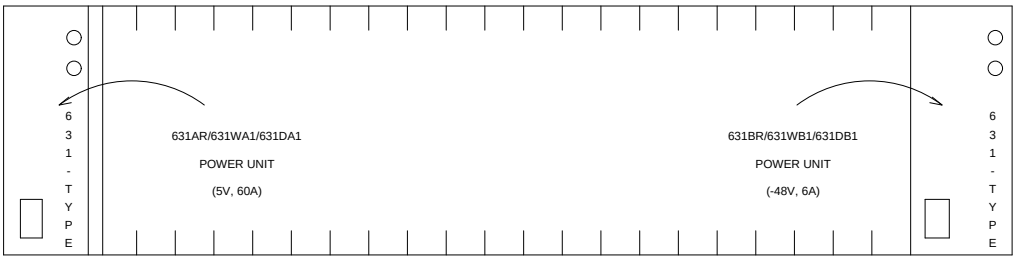

Figure 2-8. Locations of Power Units

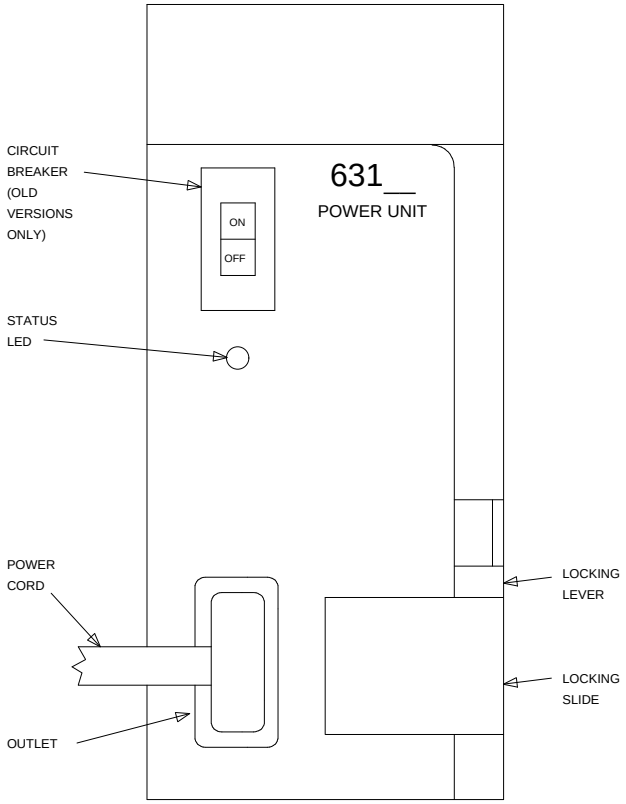

Figure 2-9. 631-Type Power Unit

Install Circuit Packs

1. See WARNING. Install the new G3r V4 control circuit packs into expansion control carrier ‘‘A.’’ Use the following figure, the new decal, and the annotated ‘‘list configuration all’’ (provided with the G3r V4 tape) as a guide.

   WARNING:
   Before inserting or removing a circuit pack from a cabinet, put on a wrist strap and attach its plug or clip to the cabinet’s frame.

2. See preceding WARNING and following WARNING and NOTE. Install the port circuit packs previously removed into the ‘‘A’’ carrier using the decal and the annotated ‘‘list configuration all’’ (provided with the G3r V4 tape) as a guide.

WARNING:
These installed port circuit packs must conform to the usable vintage requirements for a G3r V4 system (see Reference Guide for Circuit-Pack Vintages and Change Notices).

NOTE:
Since the new G3r V4 expansion control carrier has eleven more port slots than the removed control carrier, there should not be a need to move and retranslate these circuit packs.

If a port circuit pack was located in slot ‘‘01’’ of control carrier ‘‘A,’’ the STS software upgrade retranslated this circuit pack to occupy an empty port slot in the new expansion control carrier.

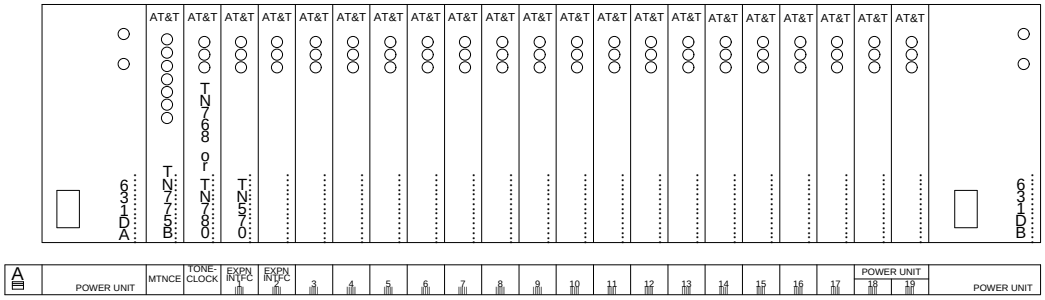

Figure 2-10. Circuit-Pack Locations in G3r V4 Expansion Control Carrier

3. Install circuit-pack blanks in slots not equipped with circuit packs.
4. Ensure that the PPN associated with this EPN is equipped with a TN570.

Interconnect Port Networks

See NOTES. Fiber-optic cabling terminated to 9823A lightwave transceivers can interconnect port networks (PNs) located up to 4,900 feet (about 9/10 mile) apart. Whereas, fiber-optic cabling terminated to 9823B lightwave transceivers can interconnect port networks located up to 25,000 feet (about 4.7 miles) apart. When available and whenever the desired distance between the port networks is less than 25,000 feet, fiber is the preferred medium for interconnecting port networks, providing significantly higher-bandwidth connectivity than DS1C remoting.

NOTE:
These distance limitations are approximate measurements of the *actual* fiber right-of-way (not of the shortest linear distance) between the two endpoints.

NOTE:
It is important to label every cable that you install. For details, refer to the section, *Labels for Fiber-Optic Cables*, in Appendix E of the installation manual.

NOTE:
Throughout these procedures, remember to keep track of which fiber is attached to which connector on each lightwave transceiver. This section provides figures offering the suggested way of making these connections.

The connectors on the lightwave transceivers are labeled either "TX" (transmit) or "RX" (receive), while the fibers attached to each connector are numbered either ''1'' or ''2.'' A viable fiber connection is only made when both fibers in each cable (that is, ''1'' and ''2'') route from the "TX" connector of a port network to the "RX'' connector of its adjacent port network. For an example, refer to Figure 2-12.

NOTE:
For implementation details, refer to the ''Fiber Link Administration'' sections of *DEFINITY Communications System Generic 3 V4 Implementation*, 555-230-655.

Collocated Port Networks

When a standard-reliability PPN and EPN are collocated, one fiber-optic cable (FL2P-P-XX) and two lightwave transceivers (9823-type) are required to connect the EPN.

NOTE:
For the FL2P-P-XX fiber-optic cable, the -XX suffix represents the length of the cable in feet. Based on floor-plan considerations, the length of these cables may vary. However, 20-foot cables are normally adequate for a G3r V4 with two port networks.

For collocated cabinets, the fiber-optic cable should be routed directly from the PPN to the EPN cabinet. Since, for this upgrade, a ''DEFINITY style'' PPN cabinet is next to a medium EPN cabinet, the preferred routing is to run the cable down the cable tray and out the bottom of the PPN cabinet. The cable is then run to the EPN cabinet and up the outside of the rear panels to the desired carrier level.

Fiber-Remoted Port Networks

When a standard-reliability PPN and EPN are remotely separated with fiber, two fiber-optic cables (FL2P-P-XX), two lightwave transceivers (9823-type), and two lightwave-interface units [provided by the Premises Service Consultant (PSC)] are required.

For fiber-remoted cabinets, the cables should be routed down the cable tray and out the bottom of the cabinet to the cross-connect field where the lightwave-interface units are located.

DS1C-Remoted Port Networks

When a standard-reliability PPN and EPN are remotely separated with DS1 facilities, two DS1C circuit packs (TN574), two DS1C-to-EI cables (846448637 and/or 846448645), two H-600-348 cables, from one to four pairs of channel service units (CSUs), and from one to four pairs of wall-field cables (provided with the CSUs) are required.

In any case, use cable ties to secure the cable against the walls of the cable tray at the cable-tie positions built into the trays.

One Collocated Expansion Port Network

1. Behind port carrier B of the PPN cabinet (see Figure 2-11 and Figure 2-12):
    - Install a 9823-type lightwave transceiver on cable connector at slot 1B02.
    - Connect one end of the fiber-optic cable to the 9823-type lightwave transceiver, just installed, at slot 1B02.
    - Route the fiber-optic cable from the 9823-type lightwave transceiver to the cabinet's cable tray and downward out of the cabinet to the EPN.
    - Delicately attach the fiber-optic cable (with cable ties) to the wall of the cable tray at the built-in cable-tie positions.
2. Behind control carrier A of the EPN cabinet:
    - Install the same kind (either 9823-A or 9823-B) of lightwave transceiver on cable connector at slot 2A01.
    - Connect the other end of the fiber-optic cable to the 9823-type lightwave transceiver, just installed, at slot 2A01.
    - Delicately attach the fiber-optic cable (with cable ties) to the rear panels of the EPN cabinet.
    - Coil up the surplus length of fiber-optic cable, and place the coil either in the cable manager or on the bottom shelf (holding the power supply) of the PPN cabinet.

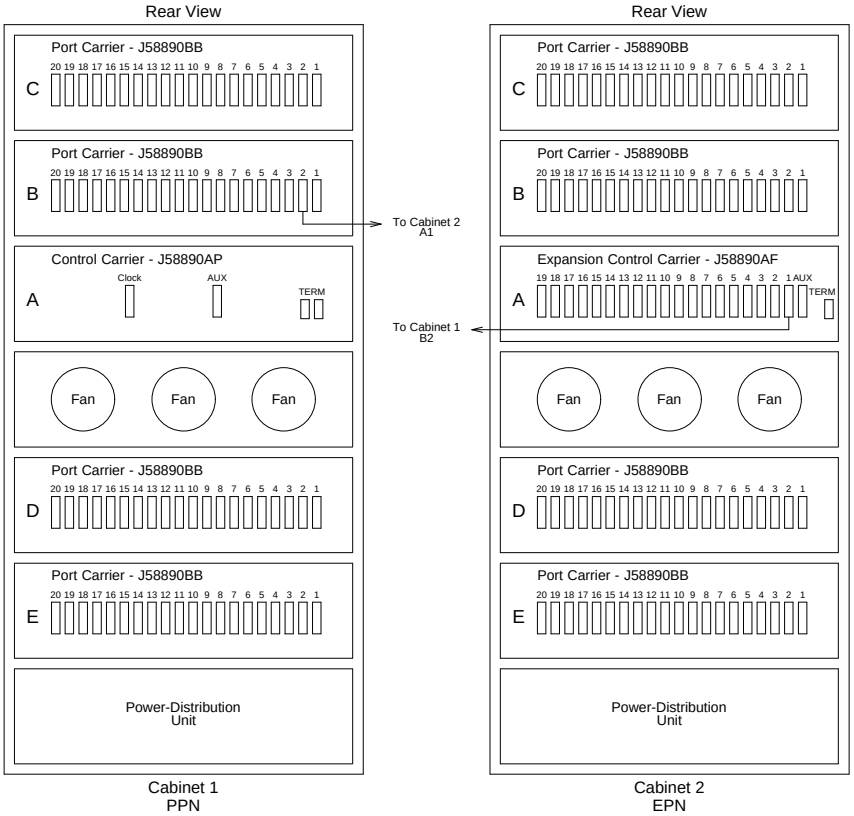

Figure 2-11. Standard-Reliability G3r V4 with Two Port Networks

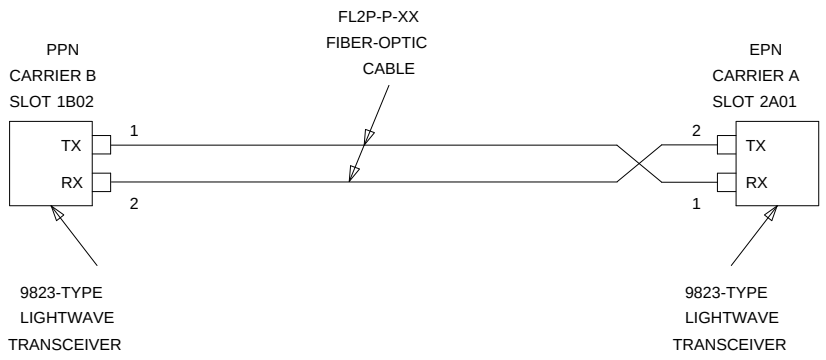

Figure 2-12. Fiber-Optic Connections Collocated Cabinets

One Fiber-Remoted Expansion Port Network

1. Behind port carrier B of the PPN cabinet (see Figure 2-11 and Figure 2-13):
   - Install a 9823-type lightwave transceiver on cable connector at slot 1B02.
   - Connect one end of the fiber-optic cable to the 9823-type lightwave transceiver at slot 1B02.
   - Route the fiber-optic cable from the 9823-type lightwave transceiver to the cabinet's cable tray and downward out of the cabinet through the cable manager to the Premises Distribution System (PDS) cross-connect facility.
   - At the PDS cross-connect facility, connect the fiber-optic cable to the lightwave-interface unit provided.
   - Delicately attach the fiber-optic cable (with cable ties) to the wall of the cable tray at the built-in cable-tie positions.
2. Behind control carrier A of the EPN cabinet:
   - Install the same kind (either 9823-A or 9823-B) of lightwave transceiver on cable connector at slot 2A01.
   - Connect the fiber-optic cable to the 9823-type lightwave transceiver slot 2A01.
   - Route the fiber-optic cable from the 9823-type lightwave transceiver to the cabinet's cable tray and downward out of the cabinet through the cable manager to the PDS cross-connect facility.

- At the PDS cross-connect facility, connect the fiber-optic cable to the lightwave-interface unit provided.
- Delicately attach the fiber-optic cable (with cable ties) to the rear panels of the EPN cabinet.
- Coil up the surplus length of fiber-optic cable, and place the coil in the cable manager.

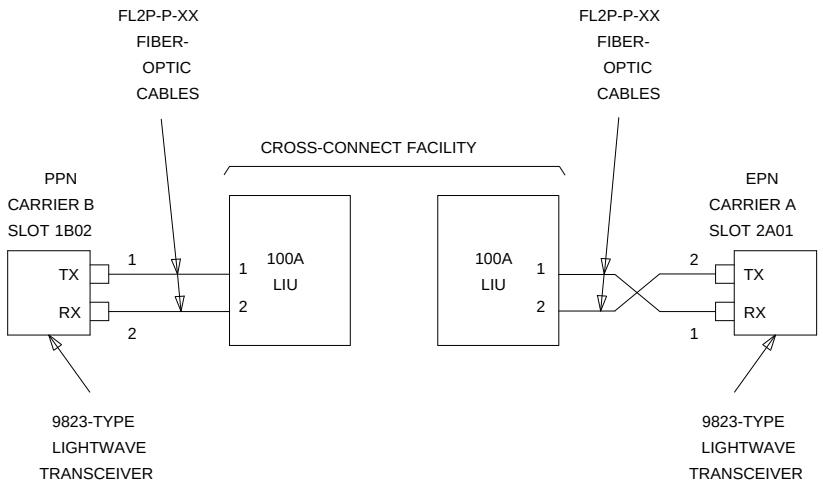

Figure 2-13. Fiber-Optic Connection Remote Cabinets

DS1C-Remoted Cabinets

See NOTES. Digital Services 1 (DS1) facilities and associated equipment-room hardware and cabling can interconnect two port networks (PNs) located up to 100 miles apart. Although DS1 remoting always serves as a lower-bandwidth alternative to fiber remoting, DS1 remoting is especially attractive when:

- Fiber-optic cabling is unavailable to the remote site
- When the desired distance between the port networks exceeds the practical fiber limit of 25,000 feet (about 4.7 miles)
- Digital Services facilities, with enough bandwidth for interconnection, already exist between the two port networks

NOTE:
As always, these distance limitations are approximate measurements of the *actual* fiber or copper right-of-way (not of the shortest linear distance) between the two endpoints.

NOTE:
The 100-mile limit for DS1 remoting is the maximum distance between *any* two port networks in a G3r V4 system with either direct or switched port-network connections.

For example, in a *directly connected* system, a single EPN can be remoted up to 100 miles. This is because the length of the *direct* fiber connection from any port network in the local equipment room to the remote EPN is 100 miles.

However, if more than one EPN is remoted in a directly connected system, the 100-mile limit applies to any two port networks. Assuming straight cable runs, suppose a customer wants to remote one EPN 80 miles due east and another EPN due north of the local PPN. This arrangement can only be accommodated if the second EPN resides no more than 60 miles north of the PPN. This is because the direct fiber distance between the two EPNs is also limited to 100 miles.

As another example, in *switch-connected* system with numerous port networks, one EPN might be remoted 75 miles from the switch node. If this were the case, then the maximum distance any other EPN could be remoted is 25 miles.

Digital public-network tie-trunk facilities provide the end-to end connectivity between the port networks. For either type of port network (PPN or EPN), a TN574 DS1 Converter (DS1C) circuit pack serves as the port-network interface to the DS1 facilities. As a PPN interface, a TN574 DS1C can reside in either:

- A port carrier (in any port slot)
- A switch-node carrier (in port slot ‘‘1’’ or ‘‘21’’)

As an EPN interface, a TN574 DS1C can reside in an expansion control carrier (in any port slot).

DS1 Cabling within the Local Port Networks. See NOTE. Use the running list shipped with the equipment to determine which cable should be connected where. The following paragraphs only provide conceptual information about wiring a DS1C interface either to an expansion interface or to a switch-node interface, not step-by-step procedures for wiring a specific G3r V4 system.

NOTE:
It is important to label every cable installed. For details, refer to “*Labels for Fiber-Optic Cables*,” in Appendix E of the installation manual.

See NOTE. As shown in Figure 2-14, a cable connects each DS1C either to the appropriate TN570 expansion interface (for a direct connection to another port network) or to the appropriate TN573 SN Interface (for a switched connection to another port network).

NOTE:
For the purposes of an R1V3 to G3r V4 upgrade, this cable will usually connect to a TN570 expansion interface (already installed) for a direct connection between the new PPN and the upgraded EPN.

On the DS1C side, a 4C retainer binds this shielded cable to the DS1C port connector. On the EI/SNI side, a 4B retainer binds the cable to the EI/SNI port connector. The DS1C-to-EI/SNI cable also provides a piggy-back connector enabling subsequent access to the public network. Table 2-4 lists the cable numbers and lengths for the possible connections.

Table 2-4. Numbers and Lengths of DS1C-to-EI/SNI Cables

Connection Type	Comcode Number	Length
Within same carrier	846448637	1 foot
Between two carriers in same port network	846448645	5.5 feet
Between two carriers in adjacent networks	846448652, and one 846885259 bracket	1 foot (used with two 9823As, & one 20-foot fiber-optic cable)

DS1 Cabling to the Public Network. See NOTE. Use the running list that accompanies the upgrade equipment to determine which cable should be connected where. The following paragraphs only provide conceptual information about wiring a DS1C interface to a wall-field block, not step-by-step procedures for wiring a specific G3r V4 system.

NOTE:
It is important to label every cable that you install. For details, refer to the section, *Labels for Fiber-Optic Cables*, in Appendix E of the installation manual.

Figure 2-14 also shows the cabling between various port networks and the cross-connect field where the public network is accessed. If already connected to either an expansion or switch-node interface, a DS1C circuit pack already resides either in an EPN expansion control carrier or in a PPN port carrier or switch-node carrier.

Depending on the traffic requirements between the two port networks, a 25-foot H600-348 cable extends from the piggy-back connector (on each DS1C-to-EI/SNI cable) to from one to four channel service units (CSUs). [This cable branches to four 15-pin subminiature D-type connectors (labeled “01” to “04”) to make the CSU connections.] Then, in turn, the CSU(s) are connected to the wall-field block (corresponding to the equipment location of the DS1C) at port connections “8,” “7,” “6,” and “5” (in descending order).

Neglecting overhead, this wiring arrangement can provide PN-to-PN communication at the bandwidth of up to four DS1 spans (1.544 Mbps each). Between each port network's wall field, the port networks communicate across leased lines in the public network.

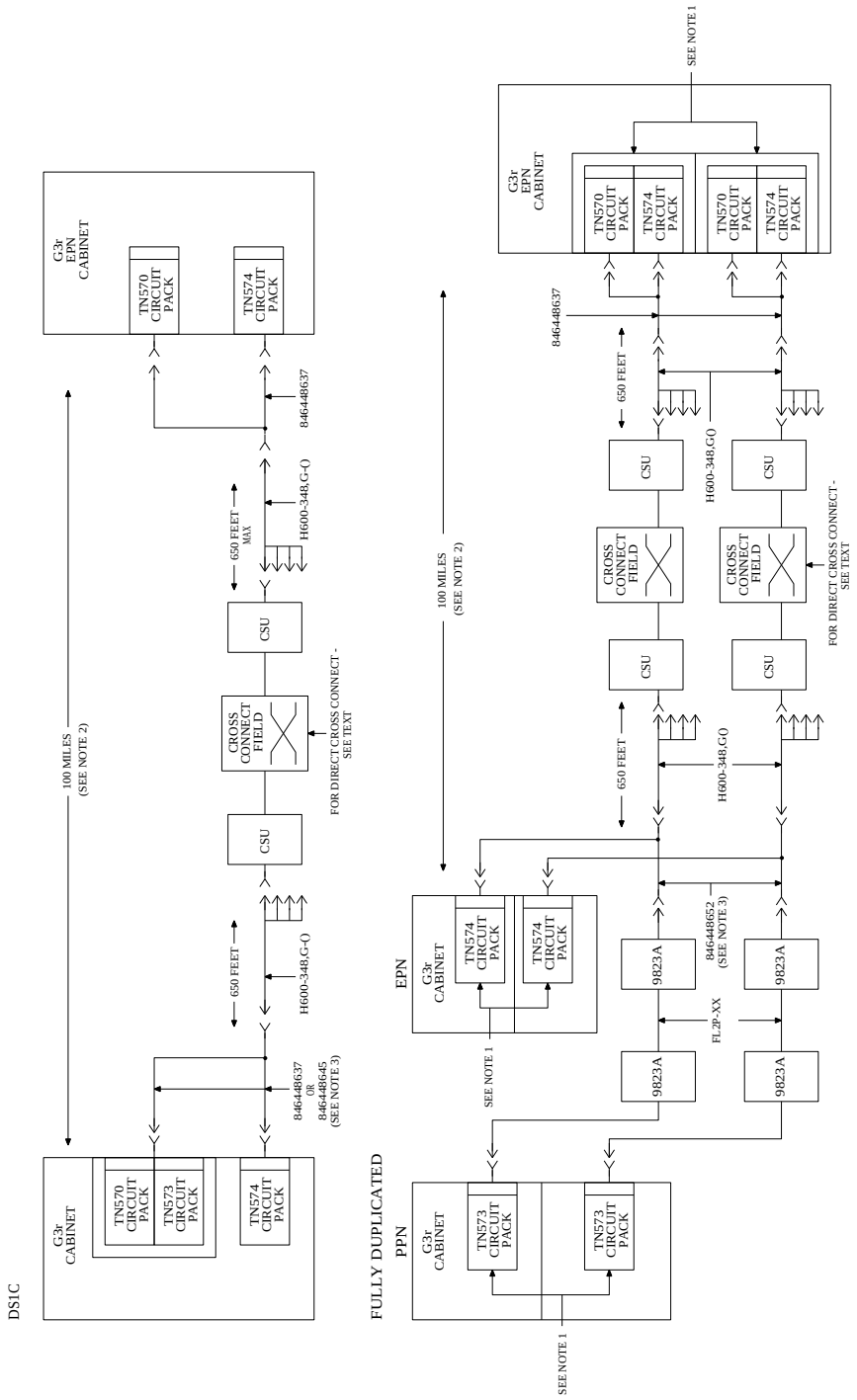

Figure 2-14. DS1 Connectivity Between Remote PNs

Verify Usable Circuit-Pack Vintages

Verify that every R1V3 circuit pack reused in the upgrade conforms to the usable vintage requirements for a G3r V4 system (see Reference Guide for Circuit-Pack Vintages and Change Notices).

Install System Access Ports

As a prerequisite for connecting various endpoints that use EIA interfaces to the G3r V4 system, install the up to eight loop-around connections for Mode 2-to-Mode 3 (and vice versa) data conversion.

From the *outgoing* perspective of the system communicating with an EIA endpoint, these loop-around connections convert Mode 3 data (circuit-switched packet data, with undefined bit rates and packet specifications) to Mode 2 data (low-speed, usually asynchronous, data at rates of 300 to 19,200 bps) by:

- Accepting Mode 3 data off the LAN bus (from the SPE) at a TN553 Packet Data Line circuit pack, where Mode 3-to-Mode 2 conversion is done
- Routing the converted data through the cross-connect field and back to a TN726B Data Line where the equivalent Mode 2 data can access the TDM bus, for subsequent routing to an EIA endpoint

The endpoints that use these EIA interfaces and, therefore, require the Mode 2-to-Mode 3 conversion include:

- DEFINITY Communications System Generic 3 Management Applications (G3-MA)
- Remote DEFINITY Communications System Generic 3 Management Terminal (G3-MT)
- Basic Call Management System (BCMS) terminal
- Call Detail Recording Unit (CDRU)/Centralized Attendant Service Plus (CAS+)
- Property Management System (PMS)
- Printers

The following figures show this loop-around configuration and how the B25A cables are cross-connected.

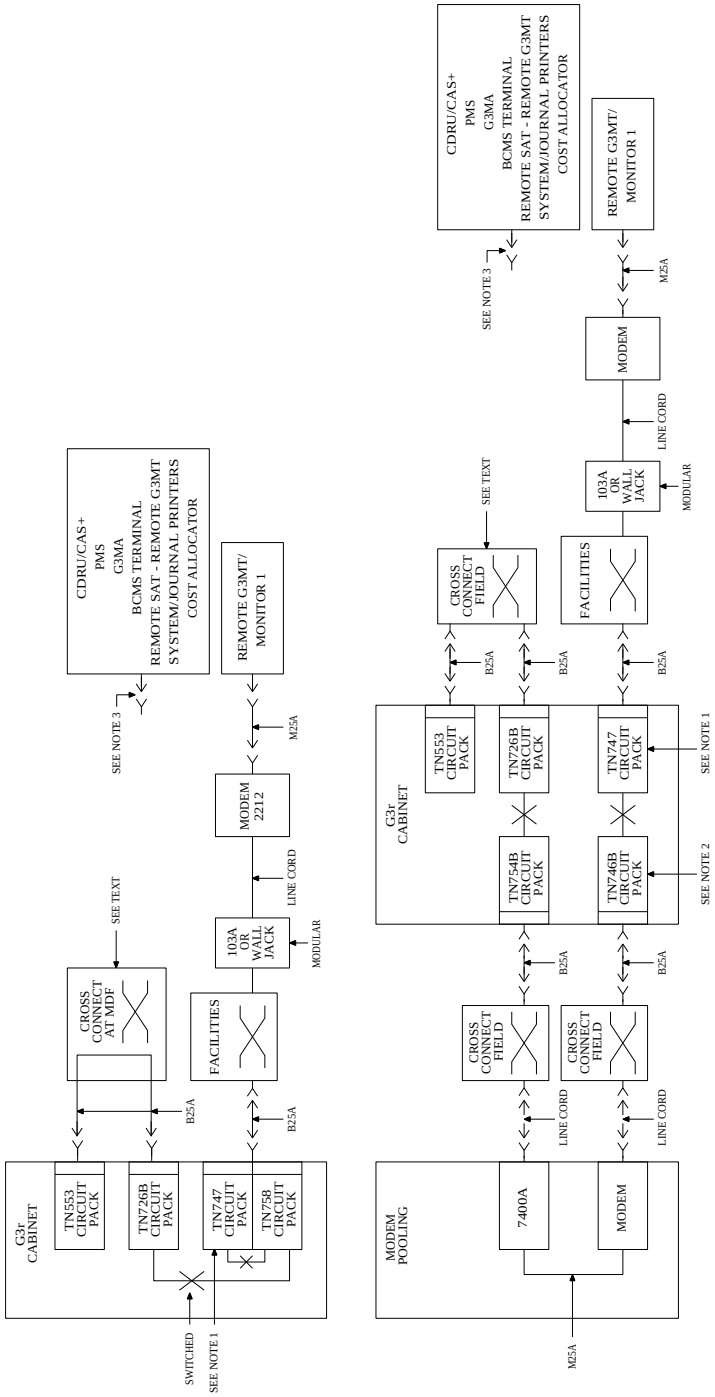

Figure 2-15. Connections: CDRU/CAS+,PMS, BCMS, Printers, G3-MA/MT

Pinouts for the TN553 and TN726B circuit packs shown cross-connected in the preceding figure are given in the table below.

Pinouts

TN553 (12 Ports)

1	26	
2	27	1
3	28	
4	29	2
5	30	
6	31	3
7	32	
8	33	4
9	34	
10	35	5
11	36	
12	37	6
13	38	
14	39	7
15	40	
16	41	8
17	42	
18	43	9
19	44	
20	45	10
21	46	
22	47	11
23	48	
24	49	12
25	50	G

TN726B (8 Ports)

1	26	Blank
2	27	
3	28	1
4	29	Blank
5	30	
6	31	2
7	32	Blank
8	33	
9	34	3
10	35	Blank
11	36	
12	37	4
13	38	Blank
14	39	
15	40	5
16	41	Blank
17	42	
18	43	6
19	44	Blank
20	45	
21	46	7
22	47	Blank
23	48	
24	49	8
25	50	Blank

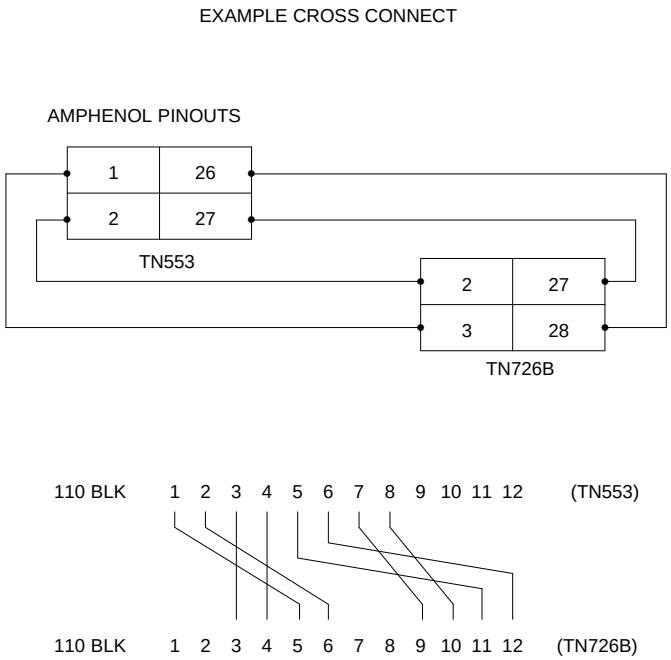

Figure 2-16. Example of Cross Connect between TN553 and TN726B

Reseat DEFINITY AUDIX System

See WARNING. If a DEFINITY AUDIX System resides in the system, reseat the AUDIX assembly to its backplane connectors.

WARNING:
Before inserting or removing a circuit pack from a cabinet, put on a wrist strap and attach its plug or clip to the cabinet's frame.

Remove Power-Failure Ground Strap

Remove the ground strap from the power-failure transfer unit.

Reboot the System

1. Connect the G3-MT to the connector labeled ''TERMINAL'' behind PPN control carrier ''A,'' or install the G3-MA according to the ''Set Up G3-MA'' chapter of *DEFINITY Communications System Generic 3 Management Applications Operations*, 585-229-202.
2. Verify that the new G3r V4 system tape is inserted in the PPN cabinet.
3. At the EPN power-distribution unit, set the main circuit breaker to ON.
4. At the PPN power-distribution unit, set the main circuit breaker to ON.
5. The system now goes through the reset level 4 rebooting process, loading blank translations from the *disk* (not the new tape). Rebooting requires 5 to 11 minutes.
6. Enter **`reset system 4 tape`**. Press (RETURN). This command instructs the system to go through the reset level 4 rebooting process, loading the upgraded STS translations from the new *tape*. Rebooting requires 5 to 11 minutes.

   Refer to ''Initialization and Recovery'' and ''LED Interpretation'' chapters in *DEFINITY Communications System Generic 3r V4 Maintenance*, 555-230-105, Issue 4, for circuit-pack LED indications and screen displays that occur during system reboot.
7. Log in at the `login:` prompt on the G3-MT or G3-MA, and set the time to ensure that the system is booted properly.
8. Enter **`restore disk spe-a full`**. Press (RETURN). This command instructs the system to write the upgraded STS translation information from memory to the disk.
9. Enter **`reset system 4`**. Press (RETURN). This command instructs the system to go through the reset level 4 rebooting process, loading the upgraded STS translations from the *disk*. Rebooting requires 5 to 11 minutes.

   NOTE:
   Certain forms have changed for G3r V4. Upgraded R1V3 translations may appear on a different form, fields may have shifted within a form, and/or the names assigned to particular fields may have changed. Refer to Table 2-1 and to *DEFINITY Communications System Generic 3r Transition Reference*, 555-230-636, and *DEFINITY Communications System Generic 3 V4 Implementation*, 555-230-655, and make the necessary changes.

Relabel Wall Field

If not done during the installation of new PPN, relabel the wall field with the new port-network number of the upgraded G3r V4 EPN. (For an upgrade of an R1V3 system, the STS software upgrade assigned port-network number ''2'' to the upgraded EPN.)

Close EPN Cabinet and Reconnect Cables

1. At the EPN power-distribution unit, set the main circuit breaker to OFF.

   NOTE:
   Powering down the EPN without powering down the PPN will set off alarms. However, these alarms should clear after power is restored to the EPN.

2. Temporarily disconnect the lightwave transceivers and fiber-optic cables, already labeled, from the appropriate carriers.
3. Replace the back panels previously removed.
4. At the EPN cabinet, reconnect the lightwave transceivers, fiber-optic cables, and the connector cables associated with the carrier being replaced.
5. Install the front door on the EPN cabinet if previously removed.
6. Install a DEFINITY label on the EPN cabinet.

Power Up the EPN Cabinet

1. At the EPN power-distribution unit, set the main circuit breaker to ON.

   After about 40 seconds, EPN power and PPN/EPN communications return.

2. After power returns to the EPN and all trouble is cleared, verify that the EMERGENCY TRANSFER CONTROL switch is set to AUTO. This restores the system to the normal mode.

Retranslate Port Circuits

If port circuit packs in the R1V3 control carrier were relocated in order to put:

- A critical port circuit pack, requiring longer nominal battery holdover (e.g., a DS1 or an Announcement circuit pack), in a port slot
- A TN736, TN752, or TN755 power supply in port slots ‘‘18’’ and ‘‘19’’
- A TN570 Expansion Interface in port slot ‘‘1’’
- A TN570 Expansion Interface in port slot ‘‘2’’ (for a simultaneous EPN addition)

of the new expansion control carrier, verify that they were retranslated during the off-site software upgrade. If not, they must be retranslated now. Refer to *DEFINITY Communications System Generic 3 V4 Implementation*, 555-230-655, for instructions on performing the retranslations.

Rerecord Announcements

The off-site STS translation upgrade did not preserve the contents of recorded announcements. Therefore, if a TN750/B Announcement circuit pack resides in the system, any announcements that were stored on the circuit pack must be rerecorded.

Run Acceptance Tests

Refer to Chapter 11 of *DEFINITY Communications System Generic 1 and Generic 3 Installation and Test*, 555-230-104, Issue 5, and perform the appropriate tests.

Register System as G3r V4

Get the serial number of the new G3r V4 PPN, and call the INADS Database Administrator at the Technical Service Center (1-800-248-1111) to register the upgraded system as a G3r V4.

Return Replaced System 75 Equipment

The System 75 equipment replaced, during the upgrade to G3r V4, should be returned to AT&T according to the requirements outlined in:

BCS/Material Logistics, MSL/Attended Stocking Locations

Methods and Procedures for Basic Material Returns

The replaced System 75 equipment includes:

- System 75 control carrier and control circuit packs
- System 75 tone-clock circuit pack
- RMSS or HCMR tape drive
- R1V3 tape cartridges
- TDM cables (ED-67086-10 G1) and cable adapters (AHF3)
- TDM bus terminators (AHF1)

R1V3 Medium to 2-Cabinet G3r V4 with High Reliability

See NOTE. Refer to *DEFINITY Communications System Generic 1 and Generic 3 Installation and Test*, 555-230-104, Issue 5, to install the new PPN cabinet.

NOTE:
During the wall-field wiring of the PPN installation, the wall field can also be relabeled with the new port-network number of the R1V3 system to be upgraded. (For an R1V3 system, the STS software upgrade assigned the upgraded EPN as port network ''2.'')

If a second EPN is being added, refer to *DEFINITY Communications System Generic 1 and Generic 3 Installation and Test*, 555-230-104, Issue 5, to install the new EPN.

Upgrade Cabinet

The existing cabinet is always upgraded to an EPN. Upgrade the cabinet using the following procedures.

The System 75 Medium R1V3 is upgraded to a high-reliability G3r V4 EPN by:

- Removing the tape-drive unit
- Removing the TDM cables, cable adapters, and terminators
- Removing the control carrier from position ''A''
- Installing the J58890AF-1 expansion control carrier in position ''A''
- Installing the new TDM/LAN cables and terminators
- Adding the G3r V4 circuit packs to the EPN
- Restructuring the port circuits as required

Prerequisite Hardware

The equipment in Table 2-5 *must* be on-site before the upgrade begins. Ensure that the tapes are G3r V4 tapes.

To place a claim for missing equipment, as part of the Streamlined Implementation process, call ''1-800-772-5409,'' and respond to the call prompter.

Table 2-5. Required Hardware

Equipment	Description	Quantity
PEC 6300-07X	Processor Port Network	1
J58890AF	Expansion Control Carrier	1
106647985	TN775B Maintenance	1
103557211	TN768 Tone-Clock	1
or		
103557336	TN780 Tone-Clock	1 (Note 5)
or		
106706955	TN2182 Tone-Clock	1 (Note 6)
103281788	TN570 Expansion Interface	2 (Note 1)
J58890TF	Tape Cartridge	2
105691158	CFY1 Current Limiter	1
63300A	FL2P-P-XX Fiber Cable	1 (Note 2)
103960456	ZAHF4 TDM Bus Terminator	2
J58890A L20	WP-91716 L6 TDM/LAN Cable	max 3
J58890A L21	WP-91716 L7 TDM/LAN Cable	1 (Note 3)
106455348	9823-A Lightwave Transceiver	2 (Note 4)
or		
106455363	9823-B Lightwave Transceiver	2 (Note 4)
105731202	176A Apparatus Blank (for removed tape drive)	1
846309466	DEFINITY Label	1

NOTE:

1. Two TN570s are required for a high-reliability switch with two port networks. One TN570 is shipped loose with the EPN equipment. The factory has installed the other TN570 in the new PPN.
2. Two cables are required if the EPN and PPN are remotely located.
3. L7 required if the R1V3 system is equipped with a ‘‘D’’ carrier.
4. Shipped loose with the EPN equipment only. One lightwave transceiver is installed in the EPN, and one in the PPN.

5. Use TN780 as Tone-Clock for Stratum 3 timing. Also required with the TN780 are the TN748, and TN744 for tone-detection.
6. The TN2182 Tone-Clock provides tone detection, tone generation, and tone-clock in one circuit pack, and it replaces the TN756, TN768, and TN780 circuit packs, while providing the same functionality as the TN748 and TN420 circuit packs.

Required Tools

The following tools and items may be required during the upgrade:

- High-intensity flashlight or AC drop light
- 3/8-inch flat-blade screwdriver with a 10-inch shank (minimum)
- 5/16-inch and 1/4-inch sockets with a ratchet and 10-inch extension
- Power screwdriver (optional)
- Long-nose pliers to disconnect grounding straps and straighten backplane pins
- Static-proof or original circuit-pack packaging for transporting circuit packs
- Labels for identifying the port circuit packs and cables attached to the rear of cabinets
- Receptacle for holding approximately 100 self-tapping screws
- 12 spare #12 and #10 self-tapping screws
- 4 spare carrier grounding straps
- Authorized wrist grounding strap
- Repair kit for backplane pins (KS-22876 L2 or equivalent)
- One copy of each of the following manuals:
  - *DEFINITY Communications System Generic 3r V4 Maintenance*, 555-230-105, Issue 4
  - *DEFINITY Communications System Generic 3 V4 Implementation*, 555-230-655

Preventive Maintenance

During the G3r V4 upgrade, follow routine preventive maintenance procedures on the system to be upgraded. For information about the procedures and necessary equipment, refer to the “Preventive Maintenance’’ section in *DEFINITY Communications System Generic 3r V4 Maintenance*, 555-230-105, Issue 4.

Verify System Status

Before proceeding, the system should be examined for alarms, and every problem should be corrected. The system must be alarm-free.

Label Cables

To make reconnecting the cables simpler and more reliable, label both ends of the connector cables associated with the carrier to be removed.

Shut Down DEFINITY AUDIX System

1. See WARNING. If a DEFINITY AUDIX System resides in the system to be upgraded, shut down the AUDIX assembly and allow the disk to completely spin down.

   WARNING:
   Neglecting to shut down an AUDIX assembly before powering down the system cabinet where it resides can damage the AUDIX disk.

2. See WARNING. To avoid an unexpected AUDIX reboot after an unplanned switch reboot, unseat the AUDIX assembly from its backplane connectors.

   WARNING:
   Before inserting or removing a circuit pack from a cabinet, put on a wrist strap and attach its plug or clip to the cabinet's frame.

Power Down R1V3 System

See CAUTION. At the power-distribution unit, set the main AC circuit breaker to OFF.

CAUTION:
Powering down the control cabinet will cause important system data, such as BCMS data, records of queued ACD calls, Automatic Wakeup requests, and Do Not Disturb requests to be lost. Refer to DEFINITY Communications System Generic 1, Generic 3i, Generic 3i-Global, and Generic 3i V4 Maintenance, 555-204-105, Issue 7, for information about preparing the system for a power down. BCMS data cannot be stored to or retreived from tape.

Install Power-Failure Transfer Ground Strap

CAUTION:
To avoid contaminating single-point ground, do not connect the ground strap while the system is powered up.

1. Connect a strap's lead either to pin 49 of the connecting block or to pin 49 of the CAP (cable access panel) associated with the power-failure transfer panel.
2. Route the other lead to an approved ground source.
3. Connect the lead to the approved ground source.

Remove Door and Panels and Disconnect Cables

1. Remove the front door from the cabinet (if desired).
2. With the cable retainer in front of you and the part number visible (4B or 4C), locate the slot that is almost vertical. (This slot is adjacent to the part number.) Insert a flat-blade screwdriver with a wide blade (1/4-inch recommended) into the slot, and twist the screwdriver. The retainer will snap open easily so that the cable can be removed.
3. At the cabinet, disconnect previously labeled cables associated with the carrier to be removed.
4. Behind the cabinet, remove the top three panels (positions A, B, and C) and the bottom panel. (Two different types of screws hold the back panels to the cabinet. The #10 screws can be removed with a screwdriver or a 1/4-inch socket. The #12 screws can be removed with a screwdriver or a 5/16-inch socket.)

Remove Circuit Packs from Control Carrier A

1. To ensure that circuit packs and power units in the ''A'' carrier are properly replaced, label each component with its slot number.
2. Disconnect the power cords from the power units in the ''A'' carrier.
3. See WARNING. Remove all circuit packs and power units from carrier ''A.'' Store the circuit packs in the static-proof packaging.

   WARNING:
   Before inserting or removing a circuit pack from a cabinet, put on a wrist strap and attach its plug or clip to the cabinet's frame.

4. Remove the circuit-pack blanks from slots that do not contain circuit packs.
5. Remove the front trim plate from the ''A'' carrier by pulling straight off.

Remove Tape Drive

NOTE:
The tape drive does not have to be removed at this time. It can be disconnected now, and then removed at a later date when time is less critical.

1. Remove tape.
2. Disconnect the AHF4 cable adapter from behind slot ‘‘07’’ of control carrier ‘‘A’’ (see Figure 2-17).
3. Open the snap connectors and remove the cable from the adapter. Route the cable back to the tape drive and remove it. There are two cable clamps on the cabinet side panel. Use a screwdriver to unsnap them. Neither the cable nor the adapter will be used in the upgraded cabinet.
   - On the HCMR tape drive, disconnect the power supply from the front of the unit. Then, remove the screws (at the rear of the unit) that attach the drive to the chassis, and slide the tape drive out the front of the cabinet.
   - On the RMSS tape drive, disconnect the red and black wire. Remove the faceplate. Then, remove the screws that hold the unit to the chassis. Slide the drive out the front of the cabinet.
4. Coil the red and black wire in an out-of-the-way position in the cabinet.
5. Install the 176A apparatus blank over the empty space left by the removal of the tape drive.

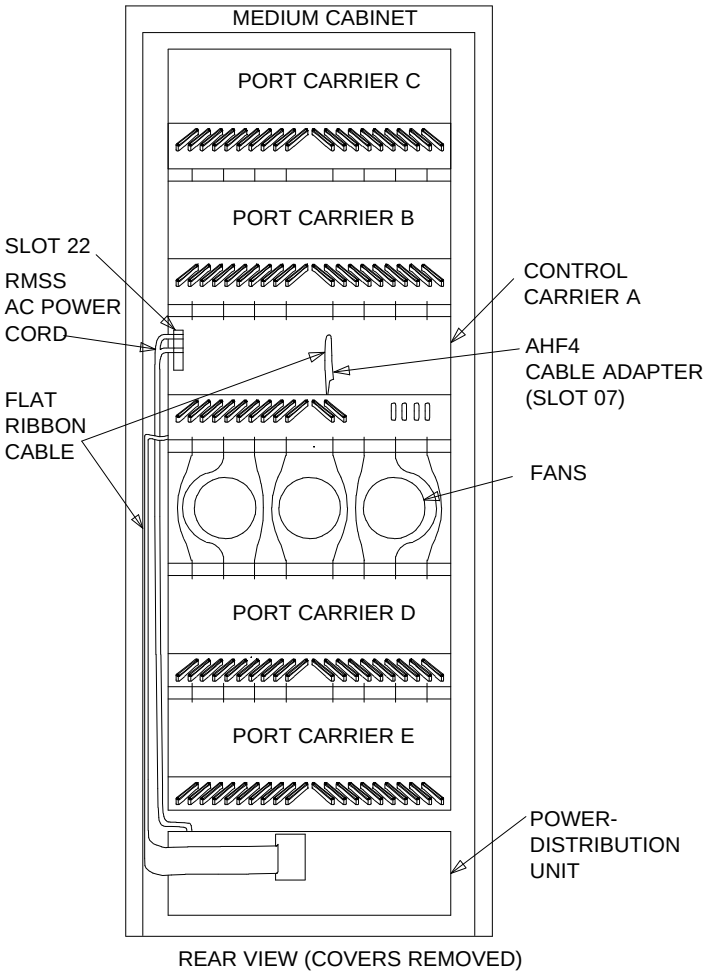

Figure 2-17. R1V3 System Cabinet

Remove Control Carrier A

1. See CAUTION and NOTE. Remove the TDM cable and AHF3 cable adapters from between the ‘‘A’’ and ‘‘B’’ carriers (see Figure 2-18). They will not be reused.
2. See CAUTION and NOTE. Remove the TDM cable and AHF3 cable adapters from between the ‘‘A’’ and ‘‘D’’ carriers. They will not be reused.

CAUTION:
When removing the cable adapters, be careful that none of the short pieces of shrink tubing come off the four corner pins of the pin-field block. Otherwise, when the new equipment is connected, -48 volts could short to ground.

NOTE:
Before disconnecting each cable adapter, note its position.

3. Disconnect one end of the eight ground straps (between the ‘‘A’’ and ‘‘B’’ carriers) from the ‘‘A’’ carrier (see Figure 2-19). These straps will be reconnected to the new ‘‘A’’ carrier.
4. Disconnect one end of the eight ground straps (between the ‘‘A’’ and ‘‘D’’ carriers) from the ‘‘A’’ carrier. These straps will be reconnected to the new ‘‘A’’ carrier.
5. Slide the latch up, and disconnect the ‘‘P1’’ (small 9-pin) connector and the ‘‘P2’’ (large 37-pin) connector from the ‘‘A’’ carrier (see Figure 2-20). Move the cables into a position where they will not interfere with removing the carrier.
6. Remove the fan trim plate by pulling straight off.
7. Clean or replace the air filter (403326820) if necessary.
8. In front of carrier, remove the four screws (top two first) holding the ‘‘A’’ carrier to the cabinet frame. Use a long-handle screwdriver or 5/16-inch socket with a 10-inch extension.
9. See CAUTION. Slide the carrier forward 1 to 2 inches; then, from the back, be sure that no cables or wiring harnesses are caught on the cabinet/carrier framework.

CAUTION:
Cables and wiring harnesses can be damaged if they catch on the framework and if too much pressure is applied in removing the carrier.

10. Remove the carrier by sliding it out the front of the cabinet.

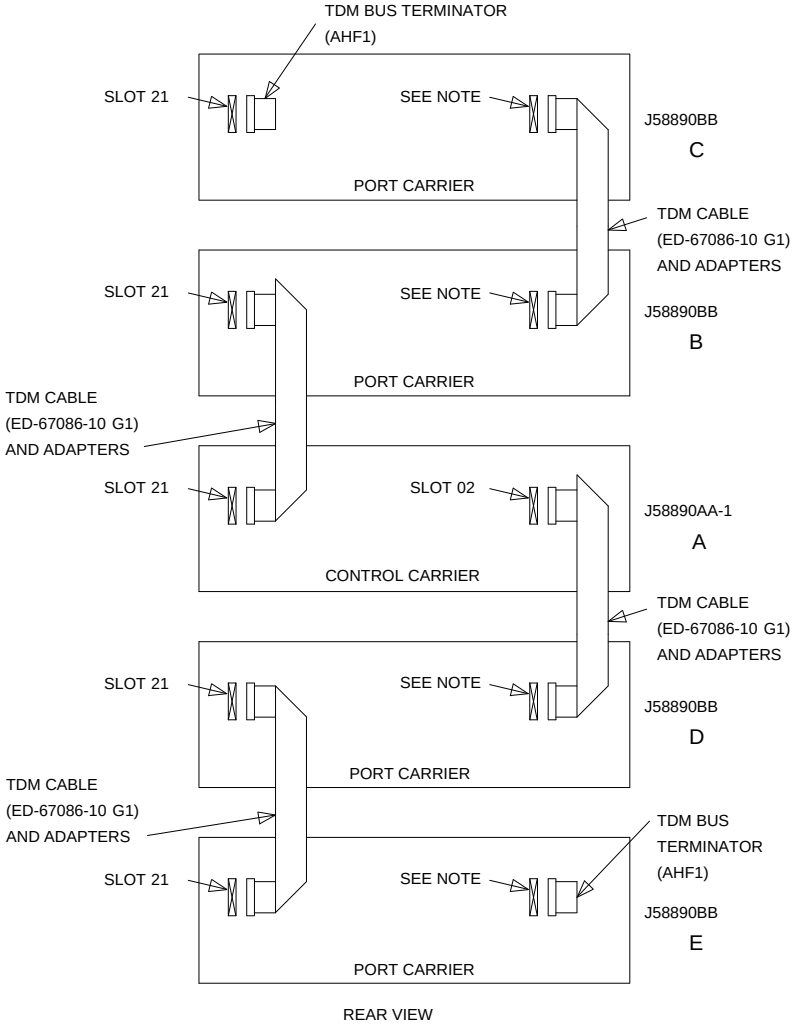

NOTE:

ON PORT CARRIER J58890BB-1, CONNECT THE TDM CABLE OR TDM TERMINATOR TO SLOT 02.
ON PORT CARRIERS J58890BB-2 AND -3, CONNECT THE TDM CABLES TO SLOT 01.

Figure 2-18. TDM Connections for R1V3 System

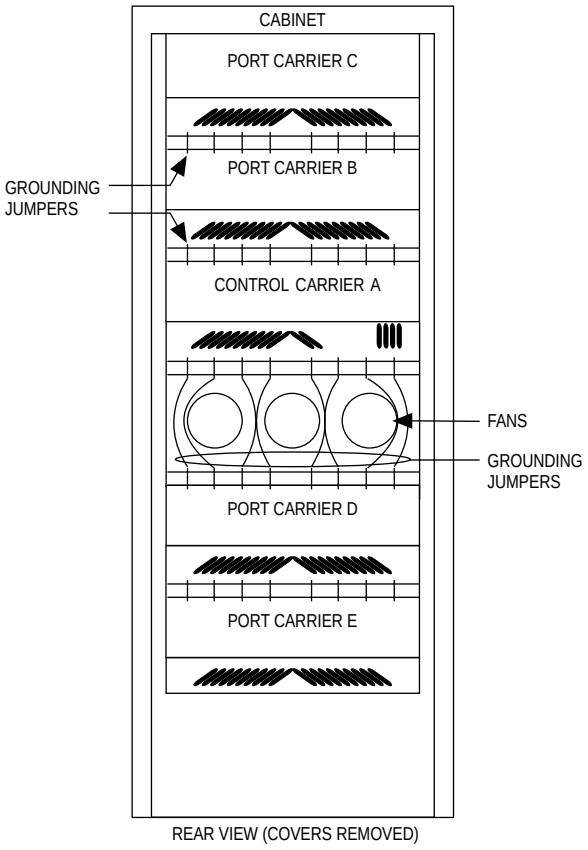

Figure 2-19. Locations of Grounding Jumpers

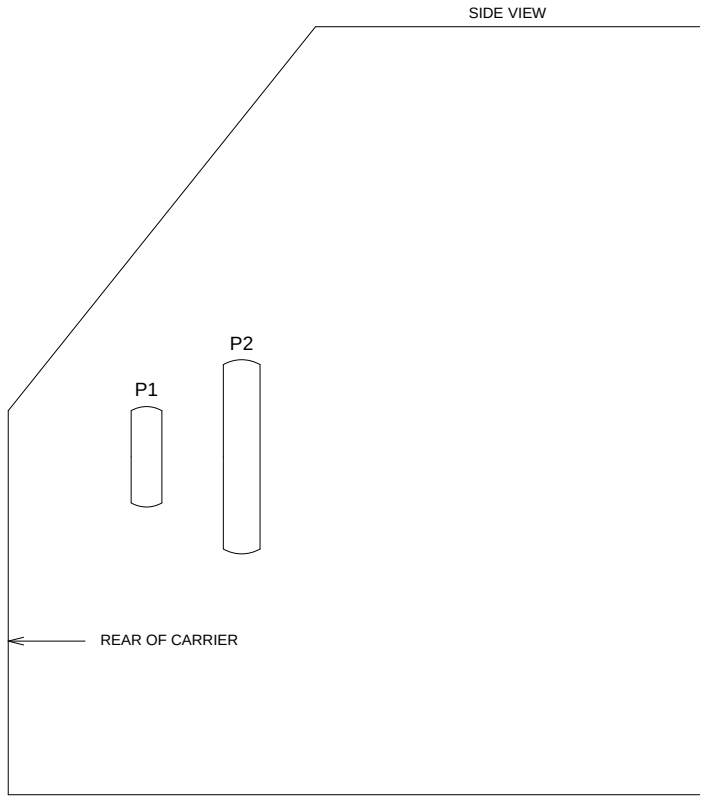

Figure 2-20. Location of P1 and P2 Connectors

Prepare New Expansion Control Carrier A

1. Visually inspect the new carrier for any damage. Verify that the backplane pins are not bent.
2. Place the expansion control carrier on the floor so that the rear of the carrier faces up.
3. Install the CFY1 current limiter (CURL) on the ‘‘A’’ carrier to the pin-field block marked ‘‘CURL.’’ The CURL is inserted with the components on the left side as viewed from the rear.
4. At the rear connector panel, determine which connectors will have a cable attached, and install a 4B cable retainer on each of these connectors.

Install New Expansion Control Carrier A

1. Install the J58890AF-1 expansion control carrier in position ‘‘A’’ by lining up the carrier with the screw holes in the cabinet. Ensure that the power cords are properly placed in the slots at the sides of the carrier.
2. See CAUTION. Fasten the carrier into position with four self-tapping screws saved from the removal of the old carrier.

   CAUTION:
   Carefully realign the threads on the self-tapping screws by turning them clockwise a turn or two before tightening them to avoid stripping the threads out of the framework.

3. Connect the ‘‘P2’’ and ‘‘P1’’ (large and small) connectors to the ‘‘A’’ carrier (see Figure 2-21). If necessary, to get enough slack in the cables, cut the tie wrap holding the intercabinet cables from the upright in the area being installed. Snap the connector lock into place to ensure that the connection is properly made.
4. Connect the eight ground straps from the ‘‘B’’ carrier to the new ‘‘A’’ carrier (see Figure 2-19). These straps were left connected to the ‘‘B’’ carrier when the old ‘‘A’’ carrier was removed.
5. Connect the eight ground straps from the ‘‘D’’ carrier to the new ‘‘A’’ carrier (see Figure 2-19). These straps were left connected to the ‘‘D’’ carrier when the old ‘‘A’’ carrier was removed.

6. See NOTE. For an AC-powered expansion control carrier, install the two new carrier-ground straps. One strap connects ground point ‘‘1’’ to the A-carrier frame (on the right side), and the other connects ground point ‘‘8’’ to the A-carrier frame (on the left side).

   NOTE:
   DC-powered carriers do not use these carrier-ground straps.

7. Connect the new TDM/LAN cable (WP-91716 L7) between the ‘‘A’’ and ‘‘D’’ carriers (see Figure 2-22 and Table 2-6). The cable is connected to the ‘‘A’’ and ‘‘D’’ carriers at the pin-field blocks marked TDM on the right side of the carriers.

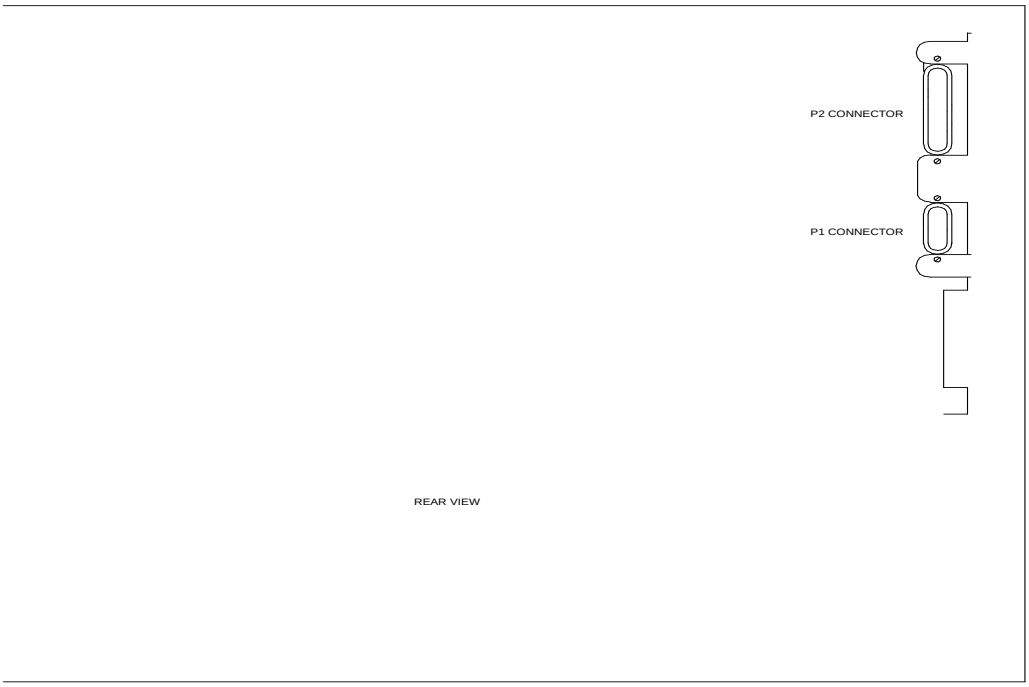

Figure 2-21. Location of P1 and P2 Connectors on DEFINITY Carrier

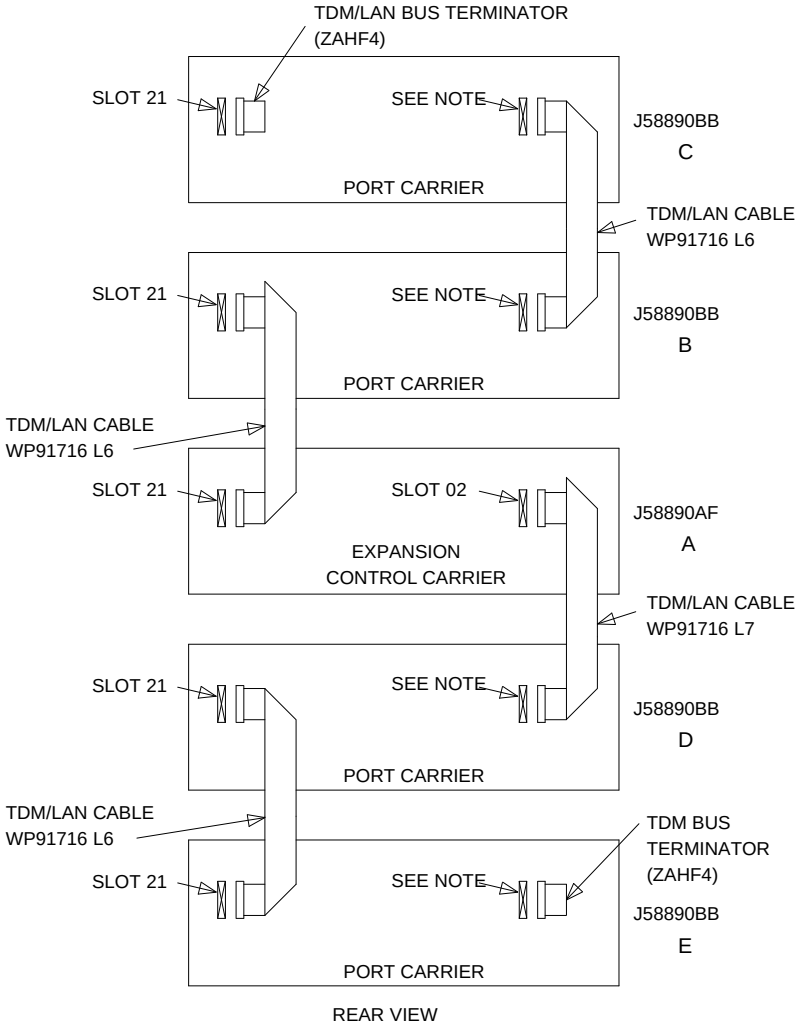

NOTE:
ON PORT CARRIER J58890BB-1, CONNECT THE TDM CABLE OR TDM TERMINATOR TO SLOT 02.
ON PORT CARRIERS J58890BB-2 AND -3, CONNECT THE TDM CABLES TO SLOT 01.

Figure 2-22. TDM/LAN Connections for G3r V4 EPN

Table 2-6. TDM/LAN Connections

"J" Number	Carrier Type	LHS Slot	RHS Slot
J58890BB-1	Port	21	02
J58890BB-2	Port	21	01
J58890BB-3	Port	21	01
J58890AF-1	EPN Control "A"	21	02

8. Connect a new TDM/LAN cable (WP-91716 L6) between the "A" and "B" carriers (see Figure 2-22 and Table 2-6). The cable is connected to the "A" and "B" carriers at the pin-field blocks marked TDM on the left side of the carriers.
9. See CAUTION and NOTE. Remove the TDM cable and AHF3 cable adapters from between carriers "B" and "C" (see Figure 2-18). Install a new WP-91716 L6 TDM/LAN cable. The cable is connected to the same pin-field blocks that the old cable was disconnected from (right side). (See Figure 2-22 and Table 2-6.)
10. See CAUTION and NOTE. Remove the TDM cable and AHF3 cable adapters from between carriers "D" and "E" (see Figure 2-18). Install the new WP-91716 L6 TDM/LAN cable. The cable is connected to the same pin-field blocks that the old cable was disconnected from (left side). (See Figure 2-22 and Table 2-6.)

CAUTION:
When removing the cable adapters or terminators, be careful that none of the short pieces of shrink tubing come off the four corner pins of the pin-field block. Otherwise, when the new equipment is connected, -48 volts could short to ground.

NOTE:
Before disconnecting each cable adapter or terminator, note its position.

11. See previous CAUTION and NOTE. Replace the existing TDM bus terminators (AHF1) with the new ZAHF4 bus terminators. (See Figure 2-22 and Table 2-6.)
12. Install the front trim plates on the "A" carrier. Install the fan trim plate.
13. Peel the old decal strip (designation strip) from the trim plates. Then, install the new decal strip at the bottom of the trim panel.

14. Install the new connector-panel decal on the rear connector panel.
15. Install the 631-type power units (removed from R1V3) into the ‘‘A’’ carrier. Three different pairs of AC power units have been developed. They are the 631AR1 and 631BR1, the 631WA1 and 631WB1, and the 631DA1 and 631DB1. Since power units from the newer pairs are downward compatible with the older ones, power units from different pairs can reside in the same carrier.

    However, do not interchange the physical locations of the units. The 631AR1, 631WA1, or 631DA1 are installed in the left side, while the 631BR1, 631WB1, or 631DB1 are installed in the right side (see Figure 2-23).
16. If the expansion control carrier contains a 631BR1 or 631WB1 power unit, install the previously removed TN736 power unit in port slots ‘‘18’’ and ‘‘19’’ of the carrier (adjacent to the 631BR1 or 631WB1). If the system is equipped for neon message waiting, a TN752 or TN755 power unit must be used.

    NOTE:
    A TN736 is not required when a 631DB1 power unit is used in a J58890AF-1 expansion control carrier or in a J58890BB-2 or -3 port carrier. It is always required in the J58890BB-1 port carrier, regardless of which 631 power unit is provided. Use a TN752 or TN755 if the system is equipped with neon message waiting.

17. Connect the power cords to the power units. The power cords are the white cables equipped with plugs that are run through the slots in the front of each carrier (see Figure 2-24).

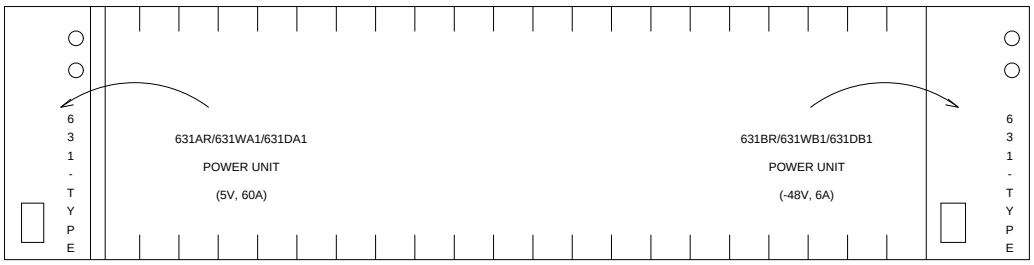

Figure 2-23. Locations of Power Units

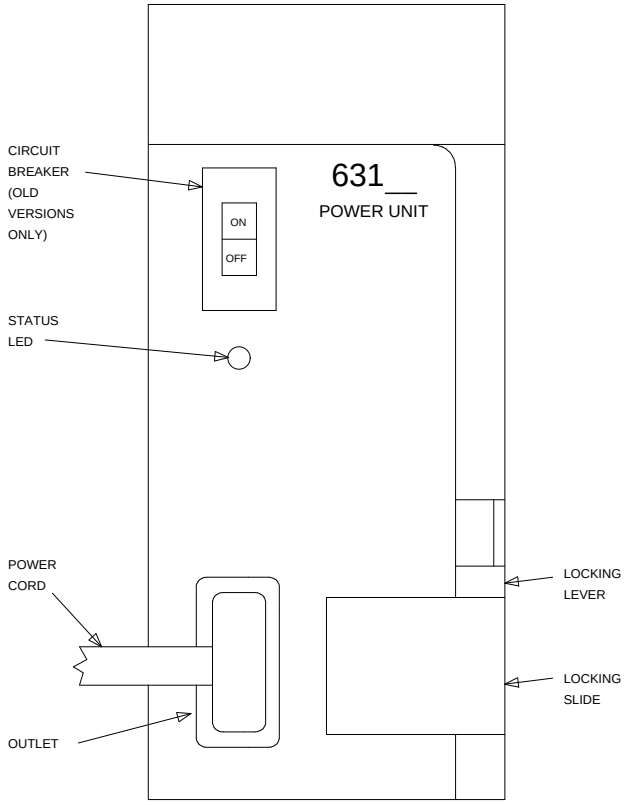

Figure 2-24. 631-Type Power Unit

Install Circuit Packs

1. See WARNING. Install the new G3r V4 control circuit packs into expansion control carrier ‘‘A.’’ Use the following figure, the new decal, and the annotated ‘‘list configuration all’’ (provided with the G3r V4 tape) as a guide.

   WARNING:
   Before inserting or removing a circuit pack from a cabinet, put on a wrist strap and attach its plug or clip to the cabinet’s frame.

2. See preceding WARNING and following WARNING and NOTE. Install the previously removed port circuit packs into the ‘‘A’’ carrier using the decal and the annotated ‘‘list configuration all’’ (provided with the G3r V4 tape) as a guide.

   WARNING:
   These installed port circuit packs must conform to the usable vintage requirements for a G3r V4 system (see Reference Guide for Circuit-Pack Vintages and Change Notices).

   NOTE:
   Since the new G3r V4 expansion control carrier has eleven more port slots than the removed control carrier, there should not be a need to move and retranslate these circuit packs.

   If a port circuit pack was located in slot ‘‘01’’ of control carrier ‘‘A,’’ the STS software upgrade retranslated this circuit pack to occupy an empty port slot in the new expansion control carrier.

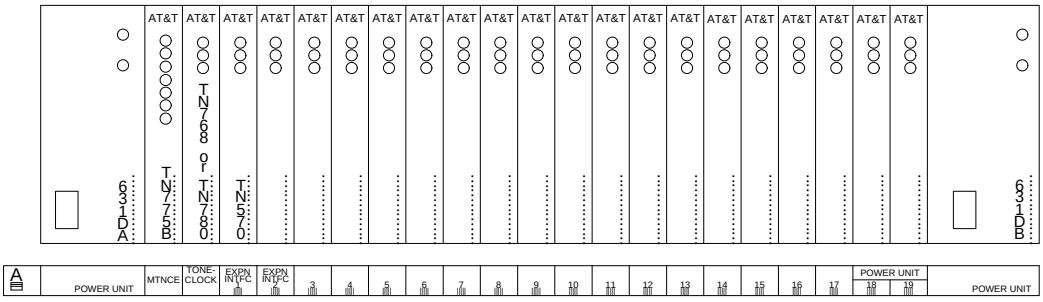

Figure 2-25. Circuit-Pack Locations in G3r V4 Expansion Control Carrier

3. Install circuit-pack blanks in slots not equipped with circuit packs.
4. Ensure that the PPN associated with this EPN is equipped with a TN570.

Interconnect Port Networks

See NOTES. Fiber-optic cabling terminated to 9823A lightwave transceivers can interconnect port networks (PNs) located up to 4,900 feet (about 9/10 mile) apart. Whereas, fiber-optic cabling terminated to 9823B lightwave transceivers can interconnect port networks located up to 25,000 feet (about 4.7 miles) apart. When available and whenever the desired distance between the port networks is less than 25,000 feet, fiber is the preferred medium for interconnecting port networks, providing significantly higher-bandwidth connectivity than DS1C remoting.

NOTE:
As always, these distance limitations are approximate measurements of the *actual* fiber right-of-way (not of the shortest linear distance) between the two endpoints.

NOTE:
It is important to label every cable that you install. For details, refer to the section, *Labels for Fiber-Optic Cables*, in Appendix E of the installation manual.

NOTE:
Throughout these procedures, remember to keep track of which fiber is attached to which connector on each lightwave transceiver. This section provides figures offering the suggested way of making these connections.

The connectors on the lightwave transceivers are labeled either “TX” (transmit) or “RX” (receive), while the fibers attached to each connector are numbered either ‘‘1’’ or ‘‘2.’’ A viable fiber connection is only made when both fibers in each cable (that is, ‘‘1’’ and ‘‘2’’) route from the “TX” connector of a port network to the “RX” connector of its adjacent port network. For an example, refer to Figure 2-27.

NOTE:
For implementation details, refer to the ‘‘Fiber Link Administration’’ sections of *DEFINITY Communications System Generic 3 V4 Implementation*, 555-230-653.

Collocated Port Networks

When a high-reliability PPN and EPN are collocated, one fiber-optic cable (FL2P-P-XX) and two lightwave transceivers (9823-type) are required to connect the EPN.

NOTE:
For the FL2P-P-XX fiber-optic cable, the -XX suffix represents the length of the cable in feet. Based on floor-plan considerations, the length of these cables may vary. However, 20-foot cables are normally adequate for a G3r V4 with two port networks.

For collocated cabinets, the fiber-optic cable should be routed directly from the PPN to the EPN cabinet. Since, for this upgrade, a ''DEFINITY style'' PPN cabinet is next to a medium EPN cabinet, the preferred routing is to run the cable down the cable tray and out the bottom of the PPN cabinet. The cable is then run to the EPN cabinet and up the outside of the rear panels to the desired carrier level.

Fiber-Remoted Port Networks

When a high-reliability PPN and EPN are remotely separated with fiber, two fiber-optic cables (FL2P-P-XX), two lightwave transceivers (9823-type), and two lightwave-interface units (provided by the PSC) are required.

For fiber-remoted cabinets, the cables should be routed down the cable tray and out the bottom of the cabinet to the cross-connect field where the lightwave-interface units are located.

DS1C-Remoted Port Networks

When a high-reliability PPN and EPN are remotely separated with DS1 facilities, two DS1C circuit packs (TN574), two DS1C-to-EI cables (846448637 and/or 846448645), two H-600-348 cables, from one to four pairs of channel service units (CSUs), and from one to four pairs of wall-field cables (provided with the CSUs) are required.

In any case, use cable ties to secure the cables against the walls of the cable tray at the cable-tie positions built into the trays.

One Collocated Expansion Port Network

1. Behind port carrier C of the PPN cabinet (see Figure 2-26 and Figure 2-27):
   - Install a 9823-type lightwave transceiver on connector at slot 1C02.
   - Connect one end of fiber-optic cable to the 9823-type lightwave transceiver at slot 1C02.
   - Route the fiber-optic cable from the 9823-type lightwave transceiver to the cabinet's cable tray and downward out of the cabinet to the EPN.
2. Behind control carrier A of the EPN cabinet:
   - Install the same kind (either 9823-A or 9823-B) of lightwave transceiver on cable connector at slot 2A01.
   - Connect the fiber-optic cable, coming from port carrier C of the PPN cabinet, to the 9823-type lightwave transceiver at slot 2A01.
3. Delicately attach the fiber-optic cable (with cable ties) to the rear panels of the EPN cabinet.
4. Coil up the surplus length of fiber-optic cable, and place the coil either in the cable manager or on the bottom shelf (holding the power supply) of the PPN cabinet.

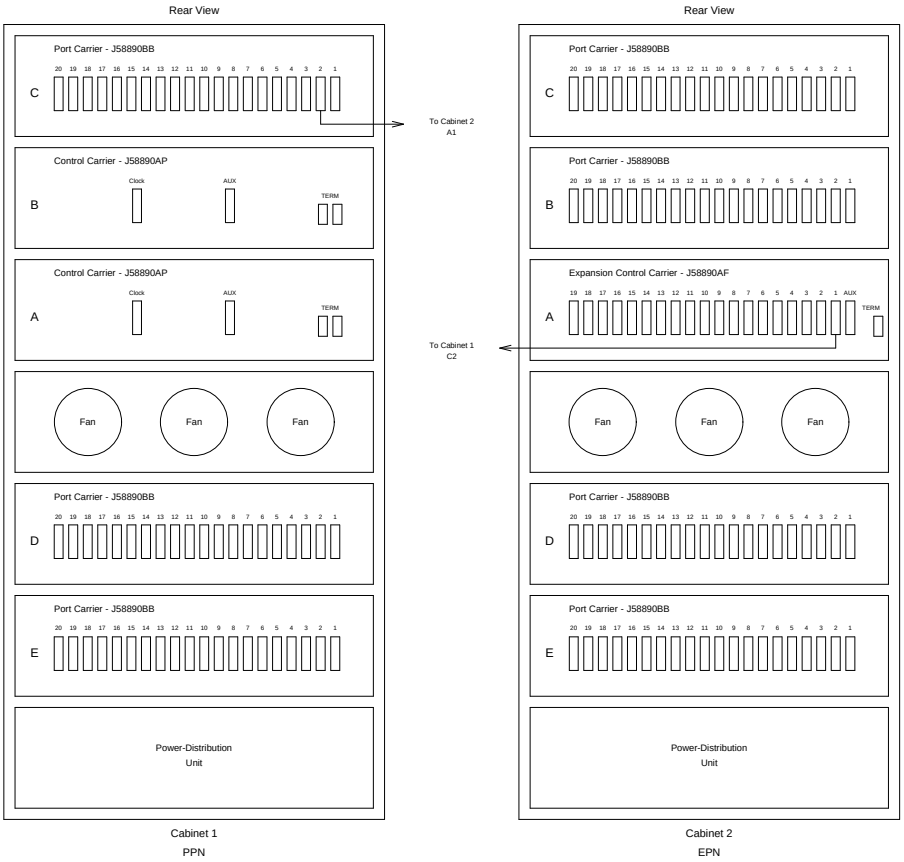

Figure 2-26. High-Reliability G3r V4 with Two Port Networks

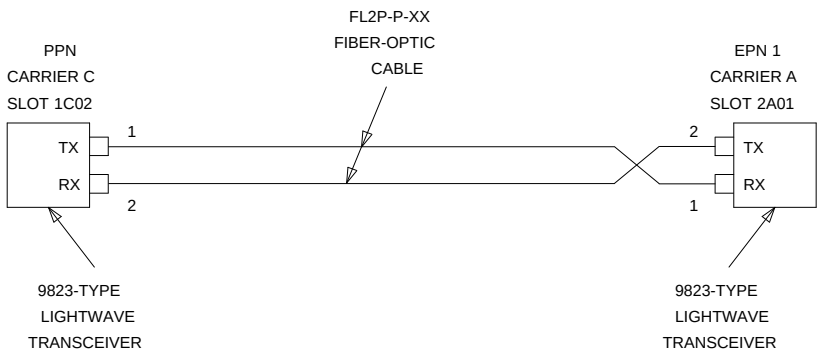

Figure 2-27. Fiber-Optic Connections PPN to EPN

One Fiber-Remoted Expansion Port Network

1. Behind port carrier C of the PPN cabinet (see Figure 2-26 and Figure 2-28):
   - Install a 9823-type lightwave transceiver on connector at slot 1C02.
   - Connect one end of the fiber-optic cable to the 9823-type lightwave transceiver at slot 1C02.
   - Route the fiber-optic cable from the 9823-type lightwave transceiver to the cabinet cable tray and downward out of the cabinet through the cable manager to the PDS cross-connect facility.
   - At the PDS cross-connect facility, connect the fiber-optic cable to the lightwave-interface unit provided.
   - Delicately attach the fiber-optic cable (with cable ties) to the wall of the cable tray at the built-in cable-tie positions.
2. Behind control carrier A of the EPN cabinet:
   - Install the same kind (either 9823-A or 9823-B) of lightwave transceiver on cable connector at slot 2A01.
   - Connect one end of a fiber-optic cable to the 9823-type lightwave transceiver at slot 2A01.
   - Route the fiber-optic cable from the 9823-type lightwave transceiver to the cabinet cable tray and downward out of the cabinet through the cable manager to the PDS cross-connect facility.
   - At the PDS cross-connect facility, connect the fiber-optic cable to the lightwave-interface unit provided.

- Delicately attach the fiber-optic cable (with cable ties) to the rear panels of the EPN cabinet.
- Coil up the surplus length of fiber-optic cable, and place the coil in the cable manager.

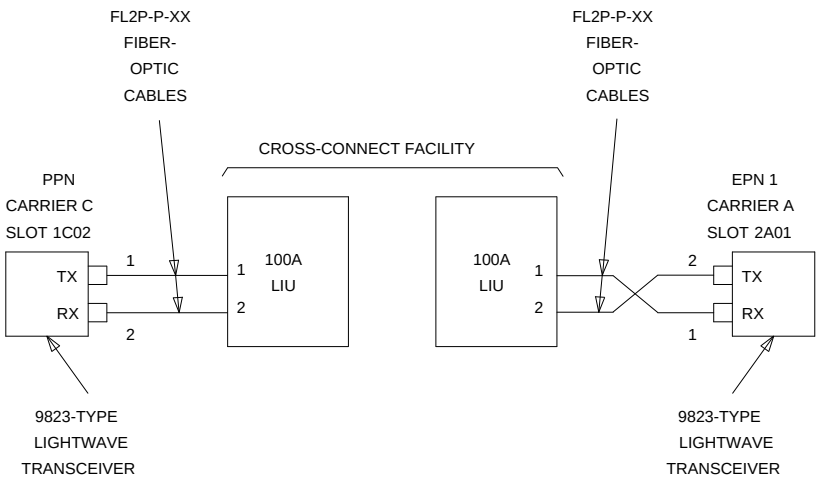

Figure 2-28. Fiber-Optic Connections PPN to EPN

DS1C-Remoted Cabinets

See NOTES. Digital Services 1 (DS1) facilities and associated equipment-room hardware and cabling can interconnect two port networks (PNs) located up to 100 miles apart. Although DS1 remoting always serves as a lower-bandwidth alternative to fiber remoting, DS1 remoting is especially attractive when:

- Fiber-optic cabling is unavailable to the remote site
- When the desired distance between the port networks exceeds the practical fiber limit of 25,000 feet (about 4.7 miles)
- Digital Services facilities, with enough bandwidth for interconnection, already exist between the two port networks

NOTE:
These distance limitations are approximate measurements of the *actual* fiber or copper right-of-way (not of the shortest linear distance) between the two endpoints.

NOTE:
The 100-mile limit for DS1 remoting is the maximum distance between *any* two port networks in a G3r V4 system with either direct or switched port-network connections.

For example, in a *directly connected* system, a single EPN can be remoted up to 100 miles. This is because the length of the *direct* fiber connection from any port network in the local equipment room to the remote EPN is 100 miles.

However, if more than one EPN is remoted in a directly connected system, the 100-mile limit applies to any two port networks. Assuming straight cable runs, suppose that a customer wants to remote one EPN 80 miles due east and another EPN due north of the local PPN. This arrangement can only be accommodated if the second EPN resides no more than 60 miles north of the PPN. This is because the direct fiber distance between the two EPNs is also limited to 100 miles.

As another example, in *switch-connected* system with numerous port networks, one EPN might be remoted 75 miles from the switch node. The maximum distance any other EPN could be remoted would be 25 miles.

Digital public-network tie-trunk facilities provide the end-to end connectivity between the port networks. For either type of port network (PPN or EPN), a TN574 DS1 Converter (DS1C) circuit pack serves as the port-network interface to the DS1 facilities. As a PPN interface, a TN574 DS1C can reside in either:

- A port carrier (in any port slot)
- A switch-node carrier (in port slot ‘‘1’’ or ‘‘21’’)

As an EPN interface, a TN574 DS1C can reside in an expansion control carrier (in any port slot).

DS1 Cabling within the Local Port Networks. See NOTE. Use the running list shipped with the equipment to determine which cable should be connected where. The following paragraphs only provide conceptual information about wiring a DS1C interface either to an expansion interface or to a switch-node interface, not step-by-step procedures for wiring a specific G3r V4 system.

NOTE:
It is important to label every cable installed. Refer to “*Labels for Fiber-Optic Cables*,” in Appendix E of the installation manual.

See NOTE. As shown in Figure 2-29, a cable connects each DS1C either to the appropriate TN570 expansion interface (for a direct connection to another port network) or to the appropriate TN573 SN Interface (for a switched connection to another port network).

NOTE:
For an R1V3 to G3r V4 upgrade, this cable is usually connected to a TN570 expansion interface (already installed) for a direct connection between the new PPN and the upgraded EPN.

On the DS1C side, a 4C retainer binds this shielded cable to the DS1C port connector. On the EI/SNI side, a 4B retainer binds the cable to the EI/SNI port connector. The DS1C-to-EI/SNI cable also provides a piggy-back connector enabling subsequent access to the public network. Table 2-7 lists the cable numbers and lengths for the possible connections.

Table 2-7. Numbers and Lengths of DS1C-to-EI/SNI Cables

Connection Type	Comcode Number	Length
Within same carrier	846448637	1 foot
Between two carriers in same port network	846448645	5.5 feet
Between two carriers in adjacent networks	846448652, and one 846885259 bracket	1 foot (used with two 9823As, & one 20-foot fiber-optic cable)

DS1 Cabling to the Public Network. See NOTE. Use the running list that accompanies the upgrade equipment to determine which cable should be connected where. The following paragraphs only provide conceptual information about wiring a DS1C interface to a wall-field block, not step-by-step procedures for wiring a specific G3r V4 system.

NOTE:
It is important to label every cable that you install. For details, refer to the section, *Labels for Fiber-Optic Cables*, in Appendix E of the installation manual.

Figure 2-29 also shows the cabling between various port networks and the cross-connect field where the public network is accessed. If already connected to either an expansion or switch-node interface, a DS1C circuit pack already resides either in an EPN expansion control carrier or in a PPN port carrier or switch-node carrier.

Depending on the traffic requirements between the two port networks, a 25-foot H600-348 cable extends from the piggy-back connector (on each DS1C-to-EI/SNI cable) to from one to four channel service units (CSUs). [This cable branches to four 15-pin subminiature D-type connectors (labeled ‘‘01’’ to ‘‘04’’) to make the CSU connections.] Then, in turn, the CSU(s) are connected to the wall-field block (corresponding to the equipment location of the DS1C) at port connections ‘‘8,’’ ‘‘7,’’ ‘‘6,’’ and ‘‘5’’ (in descending order).

Neglecting overhead, this wiring arrangement can provide PN-to-PN communication at the bandwidth of up to four DS1 spans (1.544 Mbps each). Between each port network’s wall field, the port networks communicate across leased lines in the public network.

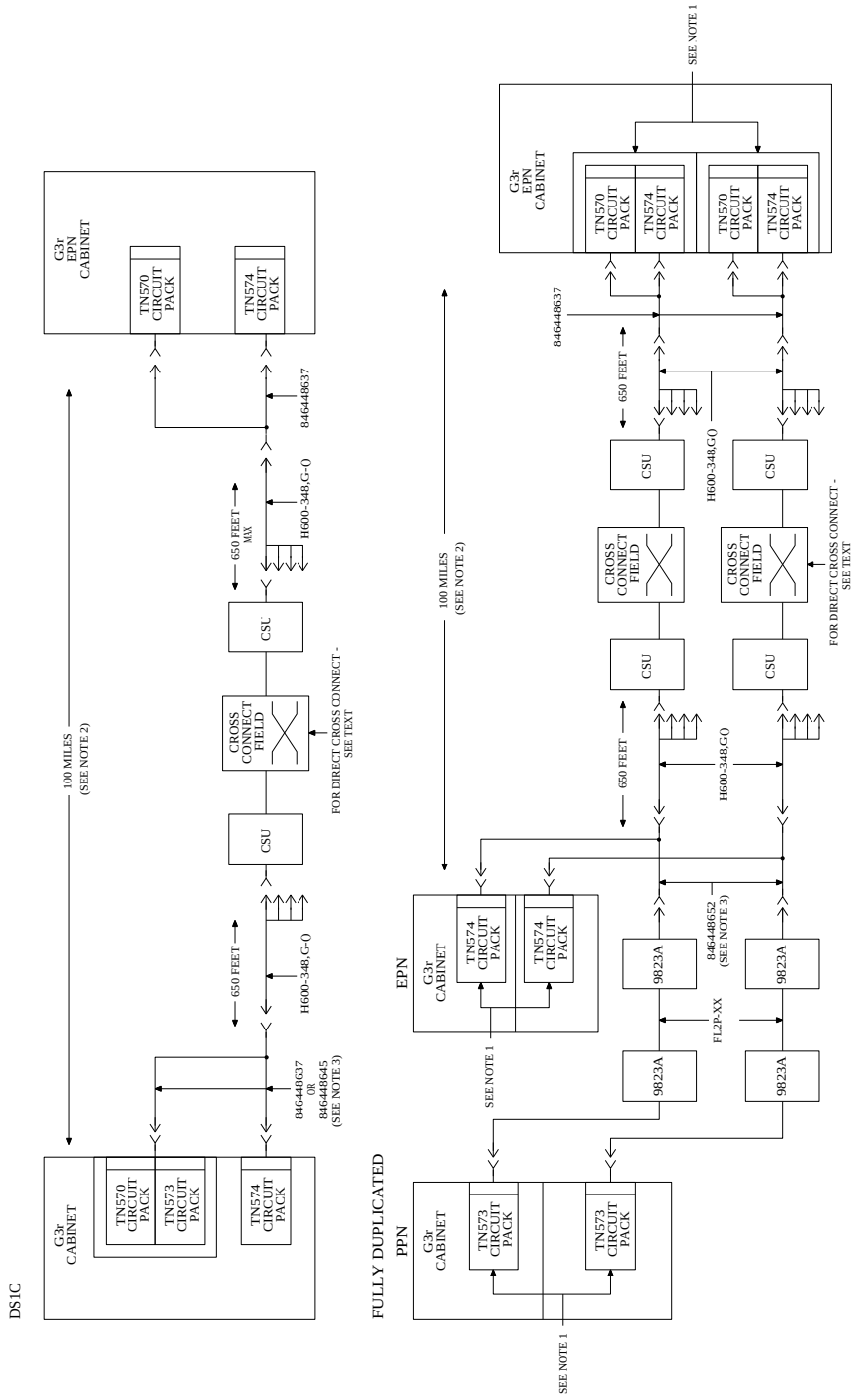

Figure 2-29. DS1 Connectivity between Remote PNs

Verify Usable Circuit-Pack Vintages

Verify that every R1V3 circuit pack reused in the upgrade conforms to the usable vintage requirements for a G3r V4 system (see Reference Guide for Circuit-Pack Vintages and Change Notices).

Install System Access Ports

As a prerequisite for connecting various endpoints that use EIA interfaces to the G3r V4 system, install the up to eight loop-around connections for Mode 2-to-Mode 3 (and vice versa) data conversion.

From the *outgoing* perspective of the system communicating with an EIA endpoint, these loop-around connections convert Mode 3 data (circuit-switched packet data, with undefined bit rates and packet specifications) to Mode 2 data (low-speed, usually asynchronous, data at rates of 300 to 19,200 bps) by:

- Accepting Mode 3 data off the LAN bus (from the SPE) at a TN553 Packet Data Line circuit pack, where Mode 3-to-Mode 2 conversion is done
- Routing the converted data through the cross-connect field and back to a TN726B Data Line where the equivalent Mode 2 data can access the TDM bus, for subsequent routing to an EIA endpoint

The endpoints that use these EIA interfaces and, therefore, require the Mode 2-to-Mode 3 conversion include:

- DEFINITY Communications System Generic 3 Management Applications (G3-MA)
- Remote DEFINITY Communications System Generic 3 Management Terminal (G3-MT)
- Basic Call Management System (BCMS) terminal
- Call Detail Recording Unit (CDRU)/Centralized Attendant Service Plus (CAS+)
- Property Management System (PMS)
- Printers

The following figures show this loop-around configuration and how the B25A cables are cross-connected.

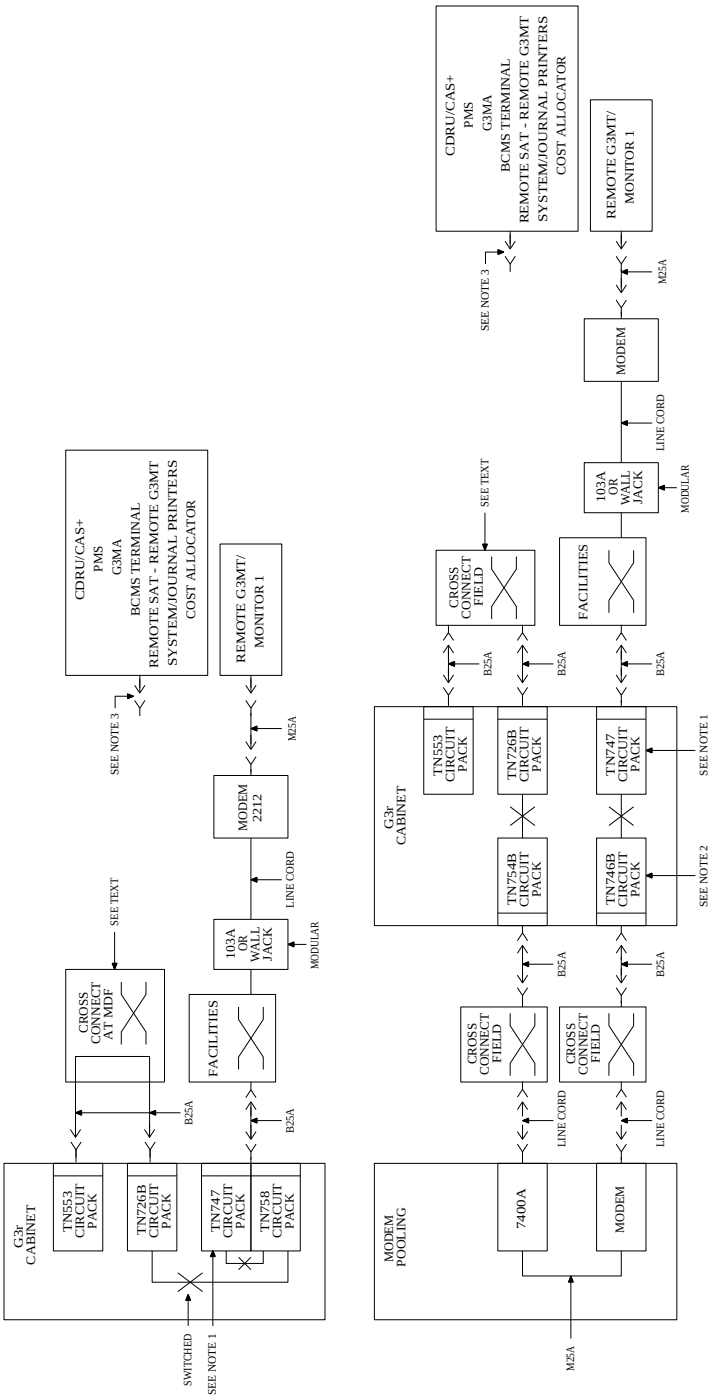

Figure 2-30. Connections: CDRU/CAS+, PMS, BCMS, Printers, G3-MA/MT

Pinouts for the TN553 and TN726B circuit packs shown cross-connected in the preceding figure are given in the table below.

Pinouts

TN553 (12 Ports)

1	26	
2	27	1
3	28	
4	29	2
5	30	
6	31	3
7	32	
8	33	4
9	34	
10	35	5
11	36	
12	37	6
13	38	
14	39	7
15	40	
16	41	8
17	42	
18	43	9
19	44	
20	45	10
21	46	
22	47	11
23	48	
24	49	12
25	50	G

TN726B (8 Ports)

1	26	Blank
2	27	
3	28	1
4	29	Blank
5	30	
6	31	2
7	32	Blank
8	33	
9	34	3
10	35	Blank
11	36	
12	37	4
13	38	Blank
14	39	
15	40	5
16	41	Blank
17	42	
18	43	6
19	44	Blank
20	45	
21	46	7
22	47	Blank
23	48	
24	49	8
25	50	Blank

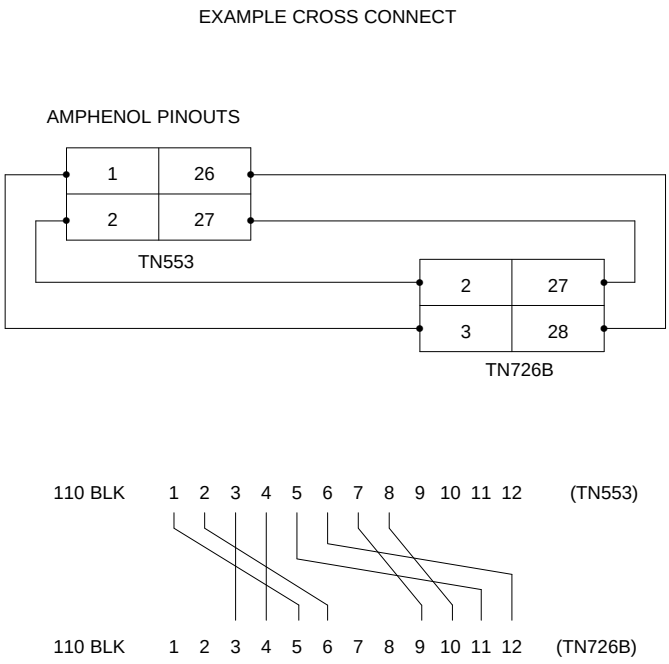

Figure 2-31. Example of Cross Connect between TN553 and TN726B

Reseat DEFINITY AUDIX System

See WARNING. If a DEFINITY AUDIX System resides in the system, reseat the AUDIX assembly to its backplane connectors.

WARNING:
Before inserting or removing a circuit pack from a cabinet, put on a wrist strap and attach its plug or clip to the cabinet's frame.

Remove Power-Failure Ground Strap

Remove the previously installed ground strap from the power-failure transfer unit.

Reboot the System

1. Connect the G3-MT to the connector labeled ''TERMINAL'' behind PPN control carrier ''A,'' or install the G3-MA according to the ''Set Up G3-MA'' chapter of *DEFINITY Communications System Generic 3 Management Applications Operations*, 585-229-202.
2. Verify that the new G3r V4 system tape is inserted in the PPN cabinet.
3. At the EPN power-distribution unit, set the main circuit breaker to ON.
4. At the PPN power-distribution unit, set the main circuit breaker to ON.
5. The system now goes through the reset level 4 rebooting process, loading blank translations from the *disk* (not the new tape). Rebooting requires 5 to 11 minutes.
6. Enter **`reset system 4 tape`**. Press (RETURN). This command instructs the system to go through the reset level 4 rebooting process, loading the upgraded STS translations from the new *tape*. Rebooting requires 5 to 11 minutes.

   Refer to ''Initialization and Recovery'' and ''LED Interpretation'' chapters in *DEFINITY Communications System Generic 3r V4 Maintenance*, 555-230-105, Issue 3, for circuit-pack LED indications and screen displays that occur during system reboot.
7. Log in at the `login:` prompt on the G3-MT or G3-MA, and set the time to ensure that the system is booted properly.
8. Enter **`status spe`**, and press (RETURN) to verify that the standby SPE is refreshed and that the standby disk is in service.
9. Enter **`restore disk both full`**. Press (RETURN). This command instructs the system to write the upgraded STS translation information from memory to the disks.
10. Enter **`reset system 4`**. Press (RETURN). This command instructs the system to go through the reset level 4 rebooting process, loading the upgraded STS translations from the *disk*. Rebooting requires 5 to 11 minutes.

NOTE:
Certain forms have changed for G3r V4. Upgraded R1V3 translations may appear on a different form, fields may have shifted within a form, and/or the names assigned to particular fields may have changed. Refer to Table 2-1 and to *DEFINITY Communications System Generic 3r Transition Reference*, 555-230-636, and *DEFINITY Communications System Generic 3 V4 Implementation*, 555-230-655, and make the necessary changes.

Relabel Wall Field

If not done during the installation of new PPN, relabel the wall field with the new port-network number of the upgraded G3r V4 EPN. (For an upgrade of an R1V3 system, the STS software upgrade assigned port-network number ‘‘2’’ to the upgraded EPN.)

Close EPN Cabinet and Reconnect Cables

1. At the EPN power-distribution unit, set the main circuit breaker to OFF.

   NOTE:
   Powering down the EPN without powering down the PPN will set off alarms. However, these alarms should clear after power is restored to the EPN.

2. Temporarily disconnect the lightwave transceivers and fiber-optic cables, already labeled, from the appropriate carriers.
3. Replace the back panels previously removed.
4. At the EPN cabinet, reconnect the lightwave transceivers, fiber-optic cables, and the connector cables associated with the carrier being replaced.
5. Install the front door on the EPN cabinet if previously removed.
6. Install a DEFINITY label on the EPN cabinet.

Power Up the EPN Cabinet

1. At the EPN power-distribution unit, set the main circuit breaker to ON.

   After about 40 seconds, EPN power and PPN/EPN communications return.

2. After power returns to the EPN and all trouble is cleared, verify that the EMERGENCY TRANSFER CONTROL switch is set to AUTO. This restores the system to the normal mode.

Retranslate Port Circuits

If port circuit packs in the R1V3 control carrier were relocated in order to put:

- A critical port circuit pack, requiring longer nominal battery holdover (e.g., a DS1 or an Announcement circuit pack), in a port slot
- A TN736, TN752, or TN755 power supply in port slots ‘‘18’’ and ‘‘19’’

- A TN570 Expansion Interface in port slot ‘‘1’’
- A TN570 Expansion Interface in port slot ‘‘2’’ (for a simultaneous EPN addition)

of the new expansion control carrier, verify that they were retranslated during the off-site software upgrade. If not, they must be retranslated now. Refer to *DEFINITY Communications System Generic 3 V4 Implementation*, 555-230-655, for instructions on performing the retranslations.

Rerecord Announcements

The off-site STS translation upgrade did not preserve the contents of recorded announcements. Therefore, if a TN750 Announcement circuit pack resides in the system, any announcements that were stored on the circuit pack must be rerecorded.

Run Acceptance Tests

Refer to Chapter 11 of *DEFINITY Communications System Generic 1 and Generic 3 Installation and Test*, 555-230-104, Issue 5, and perform the appropriate tests.

Register System as G3r V4

Get the serial number of the new G3r V4 PPN, and call the INADS Database Administrator at the Technical Service Center (1-800-248-1111) to register the upgraded system as a G3r V4.

Return Replaced System 75 Equipment

The System 75 equipment replaced, during the upgrade to G3r V4, should be returned to AT&T according to the requirements outlined in:

BCS/Material Logistics, MSL/Attended Stocking Locations

Methods and Procedures for Basic Material Returns

The replaced System 75 equipment includes:

- System 75 control carrier and control circuit packs
- System 75 tone-clock circuit pack
- RMSS or HCMR tape drive
- R1V3 tape cartridges
- TDM cables (ED-67086-10 G1) and cable adapters (AHF3)
- TDM bus terminators (AHF1)

R1V3 Medium to 2-Cabinet G3r V4 with Critical Reliability

See NOTE. Refer to *DEFINITY Communications System Generic 1 and Generic 3 Installation and Test*, 555-230-104, Issue 5, to install the new PPN cabinet.

NOTE:
During the wall-field wiring of the PPN installation, the wall field can also be relabeled with the new port-network number of the R1V3 system to be upgraded. (For an R1V3 system, the STS software upgrade assigned the upgraded EPN as port network ''2.'')

If a second EPN is being added, refer to *DEFINITY Communications System Generic 1 and Generic 3 Installation and Test*, 555-230-104, Issue 5, to install the new EPN.

Upgrade Cabinet

The existing cabinet is always upgraded to an EPN. Upgrade the cabinet using the following procedures.

The System 75 Medium R1V3 is upgraded to a critical-reliability G3r V4 EPN by:

- Removing the tape-drive unit
- Removing the TDM cables, cable adapters, and terminators
- Removing the control carrier from position ''A''
- Installing the J58890AF-1 expansion control carrier in position ''A''
- Installing the new TDM/LAN cables and terminators
- Adding the G3r V4 circuit packs to the EPN
- Restructuring the port circuits as required

Prerequisite Hardware

The equipment in Table 2-8 *must* be on-site before the upgrade begins. Ensure that the tapes are G3r V4 tapes.

To place a claim for missing equipment, as part of the Streamlined Implementation process, call ''1-800-772-5409,'' and respond to the call prompter.

Table 2-8. Required Hardware

Equipment	Description	Quantity
PEC 6300-07X	Processor Port Network	1
J58890AF	Expansion Control Carrier	1
106647985	TN775B Maintenance	1
103557211	TN768 Tone-Clock	2
or		
103557336	TN780 Tone-Clock	2 (Note 6)
or		
106706955	TN2182 Tone-Clock	1 (Note 7)
103281788	TN570 Expansion Interface	4 (Note 1)
J58890TF	Tape Cartridge	4
105691158	CFY1 Current Limiter	1
H-600-204 G1	Intercarrier Cable A	1
H-600-204 G1	Intercarrier Cable B	1
63300A	FL2P-P-XX Fiber Cable	2 (Note 2)
J58890A L20	WP-91716 L6 TDM/LAN Cable	max 3
J58890A L21	WP-91716 L7 TDM/LAN Cable	1 (Note 3)
103960456	ZAHF4 TDM Bus Terminator	2
106455348	9823-A Lightwave Transceiver	4 (Note 4)
or		
106455363	9823-B Lightwave Transceiver	4 (Note 4)
105731202	176A Apparatus Blank (for removed tape drive)	1
106689516	TN771D Maintenance/Test	1 (Note 5)
846309466	DEFINITY Label	1

NOTE:

1. Four TN570s are required for a critical-reliability switch with two port networks. Two TN570s are shipped loose with the EPN equipment. The factory has installed the other two TN570s in the new PPN.
2. Four cables are required if EPN and PPN are remotely located.
3. L7 required if the R1V3 system is equipped with a ‘‘D’’ carrier.

4. Shipped loose with the EPN equipment only. Two lightwave transceivers are installed in the EPN, and two in the PPN.
5. Required for a critical-reliability G3r V4 system.
6. Use TN780 as Tone-Clock for Stratum 3 timing. Also required with the TN780 are the TN748, and TN744 for tone-detection.
7. The TN2182 Tone-Clock provides tone detection, tone generation, and tone-clock in one circuit pack, and it replaces the TN756, TN768, and TN780 circuit packs, while providing the same functionality as the TN748 and TN420 circuit packs.

Required Tools

The following tools and items may be required during the upgrade:

- High-intensity flashlight or AC drop light
- 3/8-inch flat-blade screwdriver with a 10-inch shank (minimum)
- 5/16-inch and 1/4-inch sockets with a ratchet and 10-inch extension
- Power screwdriver (optional)
- Long-nose pliers to disconnect grounding straps and straighten backplane pins
- Static-proof or original circuit-pack packaging for transporting circuit packs
- Labels for identifying the port circuit packs and cables attached to the rear of cabinets
- Receptacle for holding approximately 100 self-tapping screws
- 12 spare #12 and #10 self-tapping screws
- 4 spare carrier grounding straps
- Authorized wrist grounding strap
- Repair kit for backplane pins (KS-22876 L2 or equivalent)
- One copy of each of the following manuals:
  - *DEFINITY Communications System Generic 3r V4 Maintenance*, 555-230-105, Issue 4
  - *DEFINITY Communications System Generic 3V4 Implementation*, 555-230-655

Preventive Maintenance

During the G3r V4 upgrade, follow routine preventive maintenance procedures on the system to be upgraded. For information about the procedures and necessary equipment, refer to the “Preventive Maintenance’’ section in *DEFINITY Communications System Generic 3r V4 Maintenance*, 555-230-105, Issue 4.

Verify System Status

Before proceeding, the system should be examined for alarms, and every problem should be corrected. The system must be alarm-free.

Label Cables

To make reconnecting the cables simpler and more reliable, label both ends of the connector cables associated with the carrier to be removed (if not already labeled).

Shut Down DEFINITY AUDIX System

1. See WARNING. If a DEFINITY AUDIX System resides in the system to be upgraded, shut down the AUDIX assembly and allow the disk to completely spin down.

   WARNING:
   Neglecting to shut down an AUDIX assembly before powering down the system cabinet where it resides can damage the AUDIX disk.

2. See WARNING. To avoid an unexpected AUDIX reboot after an unplanned switch reboot, unseat the AUDIX assembly from its backplane connectors.

   WARNING:
   Before inserting or removing a circuit pack from a cabinet, put on a wrist strap and attach its plug or clip to the cabinet's frame.

Power Down R1V3 System

See CAUTION. At the power-distribution unit, set the main AC circuit breaker to OFF.

CAUTION:
Powering down the control cabinet will cause important system data, such as BCMS data, records of queued ACD calls, Automatic Wakeup requests, and Do Not Disturb requests to be lost. Refer to DEFINITY Communications System Generic 1, Generic 3i, Generic 3i-Global, and Generic 3i V4 Maintenance, 555-204-105, Issue 7, for information about preparing the system for a power down. BCMS data cannot be stored to or retreived from tape.

Install Power-Failure Transfer Ground Strap

CAUTION:
To avoid contaminating single-point ground, do not connect the ground strap while the system is powered up.

1. Connect a strap's lead either to pin 49 of the connecting block or to pin 49 of the CAP (cable access panel) associated with the power-failure transfer panel.
2. Route the other lead to an approved ground source.
3. Connect the lead to the approved ground source.

Remove Door and Panels and Disconnect Cables

1. Remove the front door from the cabinet (if desired).
2. With the cable retainer in front of you and the part number visible (4B or 4C), locate the slot that is almost vertical. (This slot is adjacent to the part number.) Insert a flat-blade screwdriver with a wide blade (1/4-inch recommended) into the slot, and twist the screwdriver. The retainer will snap open easily so that the cable can be removed.
3. Disconnect previously labeled cables associated with the carrier to be removed.
4. Behind the cabinet, remove the top three panels (positions A, B, and C) and the bottom panel. (Two different types of screws hold the back panels to the cabinet. The #10 screws can be removed with a screwdriver or a 1/4-inch socket. The #12 screws can be removed with a screwdriver or a 5/16-inch socket.)

Remove Circuit Packs from Carriers A and B

1. To ensure that circuit packs and power units in the ''A'' and ''B'' carriers are properly replaced, label each component with its slot number.
2. Disconnect the power cords from the power units in the ''A'' and ''B'' carriers.
3. See WARNING. Remove all circuit packs and power units from carrier ''A.'' Store the circuit packs in the static-proof packaging.
4. See WARNING. Relocate the circuit packs that are in slots 1 and 2 of the ''B'' carrier.

WARNING:
Before inserting or removing a circuit pack from a cabinet, put on a wrist strap and attach its plug or clip to the cabinet's frame.

5. Remove the circuit-pack blanks from slots that do not contain circuit packs.
6. Remove the front trim plate from the ‘‘B’’ carrier by pulling straight off. Then remove the front trim plate from the ‘‘A’’ carrier.

Remove Tape Drive

NOTE:
The tape drive does not have to be removed at this time. It can be disconnected now, and then removed at a later date when time is less critical.

1. Remove tape.
2. Disconnect the AHF4 cable adapter from behind slot ‘‘07’’ of control carrier ‘‘A’’ (see Figure 2-32).
3. Open the snap connectors, and remove the cable from the adapter. Route the cable back to the tape drive and remove it. There are two cable clamps mounted on the cabinet side panel. Use a screwdriver to unsnap the cable clamps. Neither the cable nor the adapter will be used in the upgraded cabinet.
   - On the HCMR tape drive, disconnect the power supply from the front of the unit. Then, remove the screws (at the rear of the unit) that attach the drive to the chassis, and slide the tape drive out the front of the cabinet.
   - On the RMSS tape drive, disconnect the red and black wire. Remove the faceplate. Then, remove the screws that hold the unit to the chassis. Slide the drive out the front of the cabinet.
4. Coil the red and black wire in an out-of-the-way position in the cabinet.
5. Install the 176A apparatus blank over the empty space left by the removal of the tape drive.

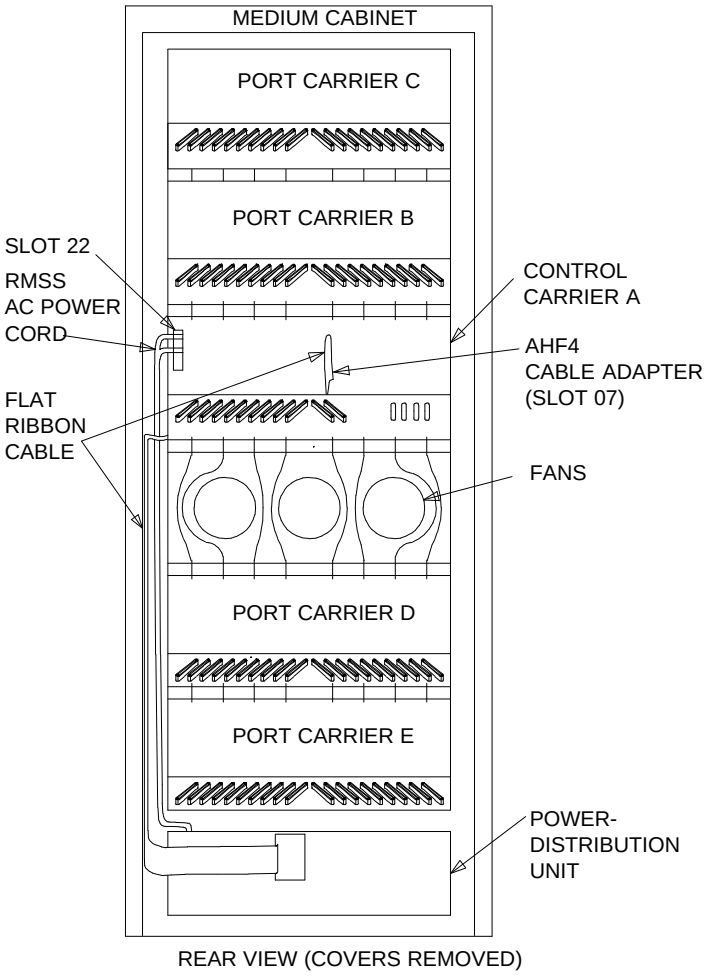

Figure 2-32. R1V3 System Cabinet

Remove Control Carrier A

1. See the following CAUTION and NOTE. Remove the TDM cable and AHF3 cable adapters from between the ‘‘A’’ and ‘‘B’’ carriers (see Figure 2-33). They will not be reused.
2. See CAUTION and NOTE. Remove the TDM cable and AHF3 cable adapters from between the ‘‘A’’ and ‘‘B’’ carriers. They will not be reused.

CAUTION:
When removing the cable adapters, be careful that none of the short pieces of shrink tubing come off the four corner pins of the pin-field block. Otherwise, when the new equipment is connected, -48 volts could short to ground.

NOTE:
Before disconnecting each cable adapter, note its position.

3. Disconnect one end of the eight ground straps (between the ‘‘A’’ and ‘‘B’’ carriers) from the ‘‘A’’ carrier (see Figure 2-34). These straps will be reconnected to the new ‘‘A’’ carrier.
4. Disconnect one end of the eight ground straps (between the ‘‘A’’ and ‘‘D’’ carriers) from the ‘‘A’’ carrier. These straps will be reconnected to the new ‘‘A’’ carrier.
5. Slide the latch up, and disconnect the ‘‘P1’’ (small 9-pin) connector and the ‘‘P2’’ (large 37-pin) connector from the ‘‘A’’ carrier (see Figure 2-35). Move the cables into a position where they will not interfere with removing the carrier.
6. Remove the fan trim plate by pulling straight off.
7. Clean or replace the air filter (403326820) if necessary.
8. In front of carrier, remove the four screws (top two first) holding the ‘‘A’’ carrier to the cabinet frame. Use a long-handle screwdriver or 5/16-inch socket with a 10-inch extension.
9. See CAUTION. Slide the carrier forward 1 to 2 inches; then, from the back, be sure that no cables or wiring harnesses are caught on the cabinet/carrier framework.

CAUTION:
Cables and wiring harnesses can be damaged if they catch on the framework and if too much pressure is applied in removing the carrier.

10. Remove the carrier by sliding it out the front of the cabinet.

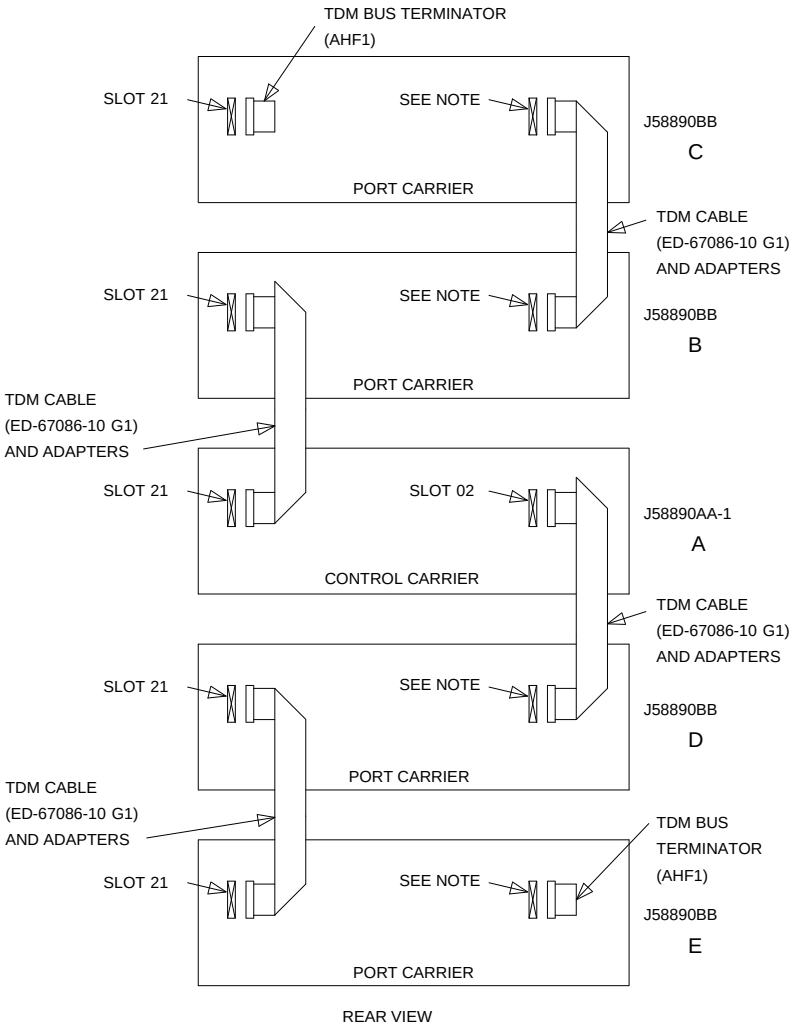

NOTE:

ON PORT CARRIER J58890BB-1, CONNECT THE TDM CABLE OR TDM TERMINATOR TO SLOT 02.

ON PORT CARRIERS J58890BB-2 AND -3, CONNECT THE TDM CABLES TO SLOT 01.

Figure 2-33. TDM Connections for R1V3 System

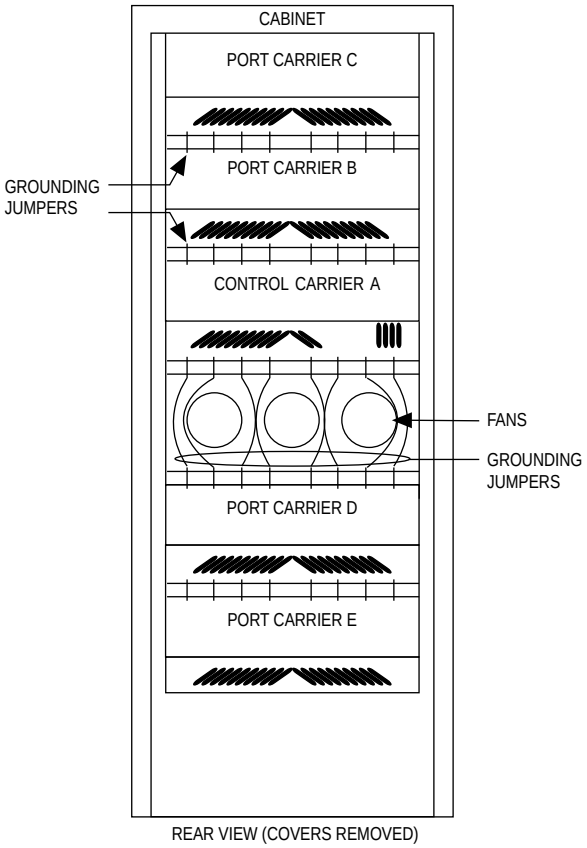

Figure 2-34. Locations of Grounding Jumpers

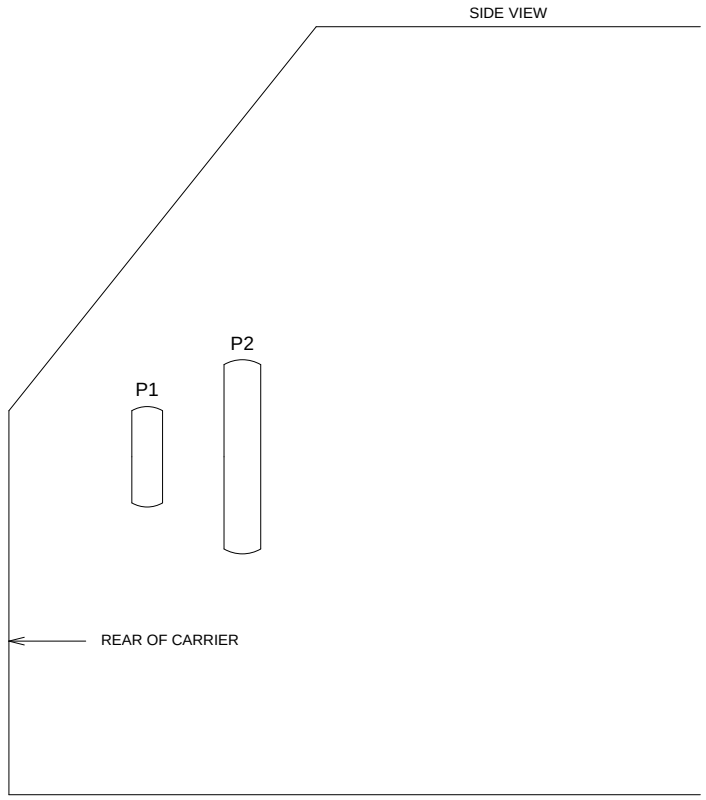

Figure 2-35. Location of P1 and P2 Connectors

Prepare New Expansion Control Carrier A

1. Visually inspect the new carrier for any damage. Verify that the backplane pins are not bent.
2. Place the expansion control carrier on the floor so that the rear of the carrier faces up.
3. Install the CFY1 current limiter (CURL) on the ‘‘A’’ carrier to the pin-field block marked ‘‘CURL.’’ The CURL is inserted with the components on the left side as viewed from the rear.
4. At the rear connector panel, determine which connectors will have a cable attached, and install a 4B cable retainer on each of these connectors.

Install New Expansion Control Carrier A

1. Install the J58890AF-1 expansion control carrier in position ‘‘A’’ by lining up the carrier with the screw holes in the cabinet. Ensure that the power cords are properly placed in the slots at the sides of the carrier.
2. See CAUTION. Fasten the carrier into position with four self-tapping screws saved from the removal of the old carrier.

   CAUTION:
   Carefully realign the threads on the self-tapping screws by turning them clockwise a turn or two before tightening them to avoid stripping the threads out of the framework.

3. Connect the ‘‘P2’’ and “P1’’ (large and small) connectors to the ‘‘A’’ carrier. If necessary, to get enough slack in the cables, cut the tie wrap holding the intercabinet cables from the upright in the area of the carrier being installed. Snap the connector lock into place to ensure that the connection is properly made (see Figure 2-36).
4. Connect the eight ground straps from the ‘‘D’’ carrier to the new ‘‘A’’ carrier (see Figure 2-34). These straps were left connected to the ‘‘D’’ carrier.
5. Connect the eight ground straps from the ‘‘B’’ carrier to the new ‘‘A’’ carrier (see Figure 2-34). These straps were left connected to the “B’’ carrier.
6. See NOTE. For an AC-powered expansion control carrier, install the two new carrier-ground straps. One strap connects ground point ‘‘1’’ to the A-carrier frame (on the right side), and the other connects ground point “8’’ to the A-carrier frame (on the left side).

   NOTE:
   DC-powered carriers do not use these carrier-ground straps.

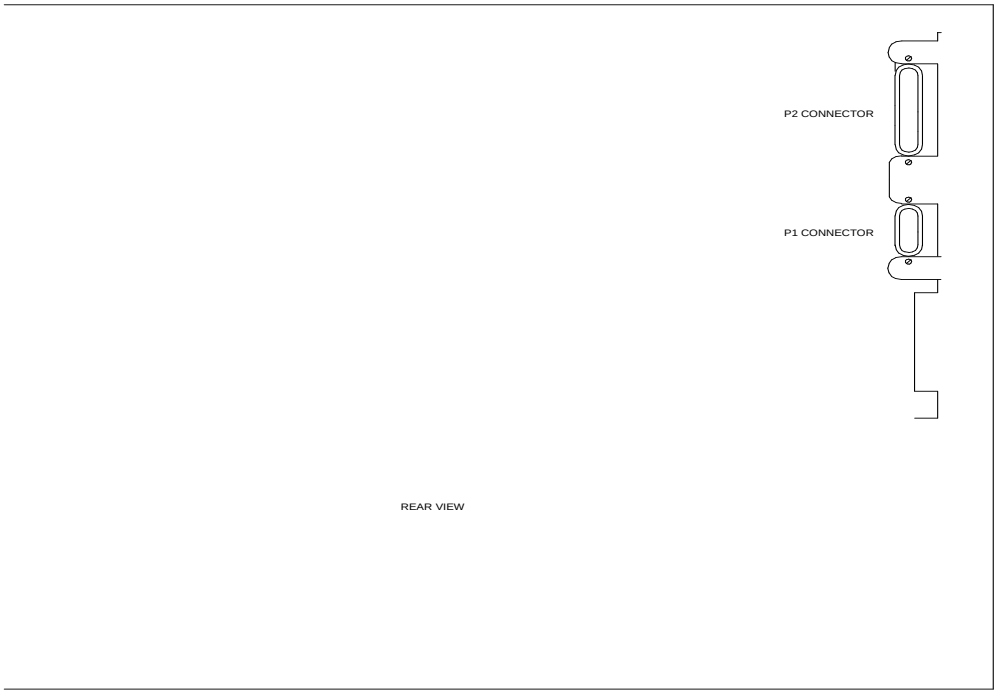

Figure 2-36. Location of P1 and P2 Connectors on DEFINITY Carrier

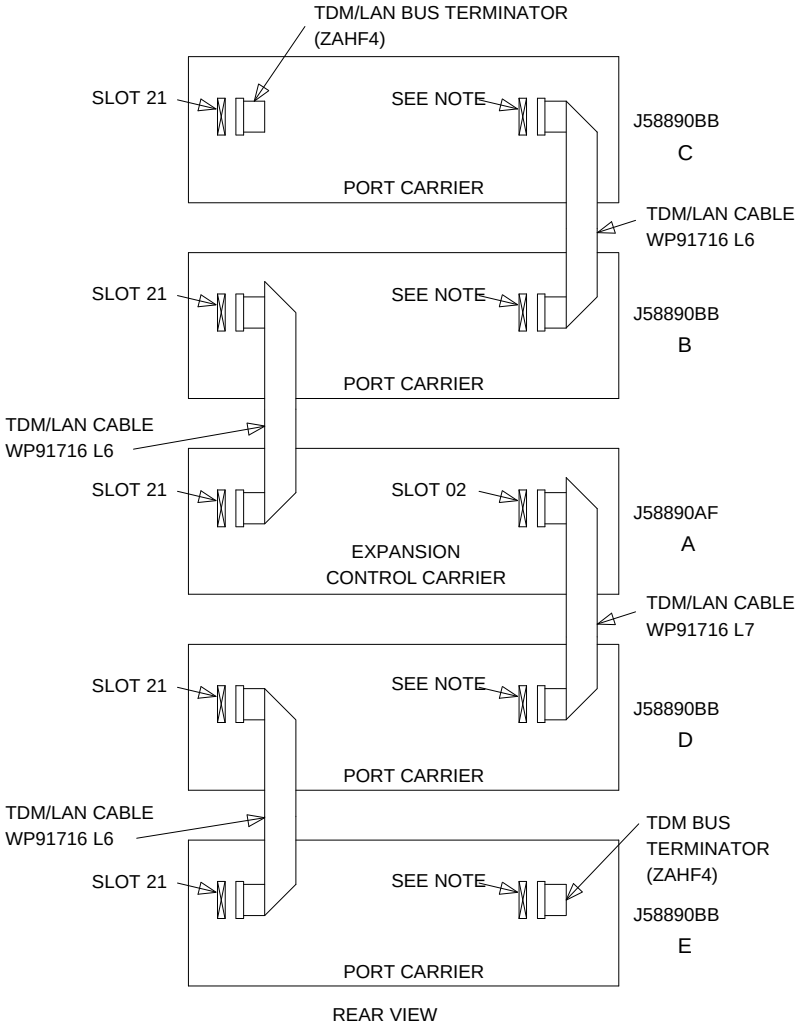

NOTE:
ON PORT CARRIER J58890BB-1, CONNECT THE TDM CABLE OR TDM TERMINATOR TO SLOT 02.
ON PORT CARRIERS J58890BB-2 AND -3, CONNECT THE TDM CABLES TO SLOT 01.

Figure 2-37. TDM/LAN Connections for G3r V4 EPN

Table 2-9. TDM/LAN Connections

"J" Number	Carrier Type	LHS Slot	RHS Slot
J58890BB-1	Port	21	02
J58890BB-2	Port	21	01
J58890BB-3	Port	21	01
J58890AF	EPN Control "A"	21	02

7. Connect the new TDM/LAN cable (WP-91716 L7) between the "A" and "D" carriers (see Figure 2-37 and Table 2-9). The cable is connected to the "A" and "D" carriers at the blocks marked "TDM" on the right side of each carrier.
8. Connect the new TDM/LAN cable (WP-91716 L6) between the "A" and "B" carriers. The cable is connected to the "A" and "B" carriers at the blocks marked "TDM" on the left side of each carrier.
9. See CAUTION and NOTE. Remove the TDM cable and AHF3 cable adapters from between carriers "B" and "C" (see Figure 2-33). Install the new WP-91716 L6 TDM/LAN cable. The new cable is connected to the same blocks that the old cable was disconnected from (right side). (See Figure 2-37 and Table 2-9.)
10. See CAUTION and NOTE. Remove the TDM cable and AHF3 cable adapters from between carriers "D" and "E" (see Figure 2-33). Install the new WP-91716 L6 TDM/LAN cable. The new cable is connected to the same blocks that the old cable was disconnected from (left side). (See Figure 2-37 and Table 2-9.)

CAUTION:
When removing the cable adapters or terminators, be careful that none of the short pieces of shrink tubing come off the four corner pins of the pin-field block. Otherwise, when the new equipment is connected, -48 volts could short to ground.

NOTE:
Before disconnecting each cable adapter or terminator, note its position.

11. See previous CAUTION and NOTE. Replace the existing TDM bus terminators (AHF1) with the new ZAHF4 bus terminators. (See Figure 2-37 and Table 2-9.)

12. Install the front trim plates; first on the ‘‘A’’ carrier, and then on the ‘‘B’’ carrier.
13. Peel the old decal strip (designation strip) from both trim plates. Then, install the new decal strip at the bottom of each trim panel.
14. Install the new connector-panel decal on the rear connector panel.
15. See CAUTION. Install the ICC cables (H600-204 G1) between carriers ‘‘A’’ and ‘‘B.’’ Connect the cables to the ICC pin-field block on both carriers (see Table 2-10 and Figure 2-38 and Figure 2-39). Each cable is installed so that the dark red, blue, or purple stripe (depending upon the supplier) is on the bottom at both ends.

    CAUTION:
    While installing the ICC cable connectors, be careful not to bend any backplane pins. Double check each connection to verify that the pins are straight.

16. Install the 631-type power units (removed from R1V3) into the ‘‘A’’ carrier. Three different pairs of AC power units have been developed. They are the 631AR1 and 631BR1, the 631WA1 and 631WB1, and the 631DA1 and 631DB1. Since power units from the newer pairs are downward compatible with the older ones, power units from different pairs can reside in the same carrier.

    However, do not interchange the physical locations of the units. The 631AR1, 631WA1, or 631DA1 are installed in the left side, while the 631BR1, 631WB1, or 631DB1 are installed in the right side (see Figure 2-40).

17. If the expansion control carrier contains a 631BR1 or 631WB1 power unit, install the previously removed TN736 power unit in port slots ‘‘18’’ and ‘‘19’’ of the carrier (adjacent to the 631BR1 or 631WB1). If the system is equipped for neon message waiting, a TN752 or TN755 power unit must be used.

    NOTE:
    A TN736 is not required when a 631DB1 power unit is used in a J58890AF expansion control carrier or in a J58890BB-2 or -3 port carrier. It is always required in the J58890BB-1 port carrier, regardless of which 631 power unit is provided. Use a TN752 or TN755 if the system is equipped with neon message waiting.

18. Connect the power cords to the power units. The power cords are the white cables equipped with plugs that are run through the slots in the front of each carrier (see Figure 2-41).

Table 2-10. Intercarrier Cable Connections

Connect ICC Cables				
	From		**To**	
	Carrier	Pin-Field Block	Carrier	Pin-Field Block
EPN	J58890AF	ICCA ICCB	J58890BB	ICCA ICCB

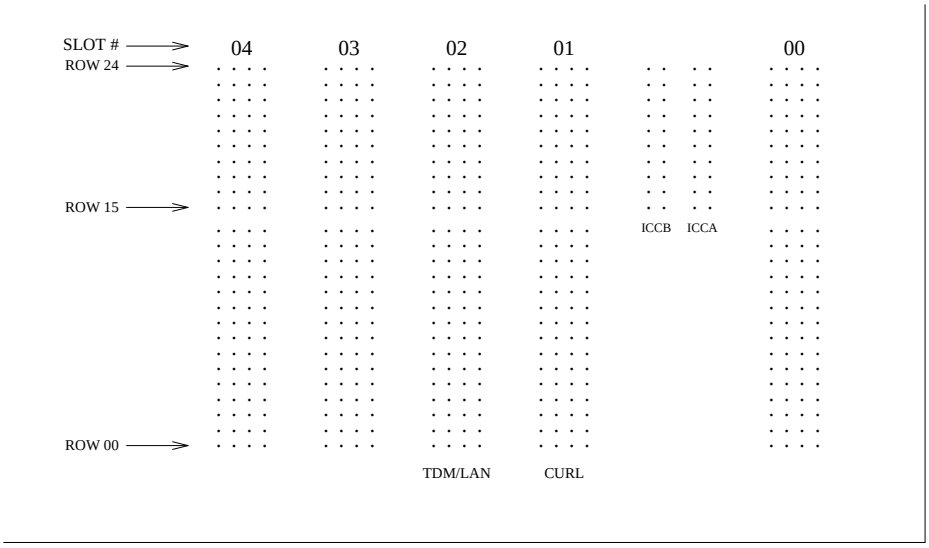

Figure 2-38. ICC Connections for Expansion Control Carrier

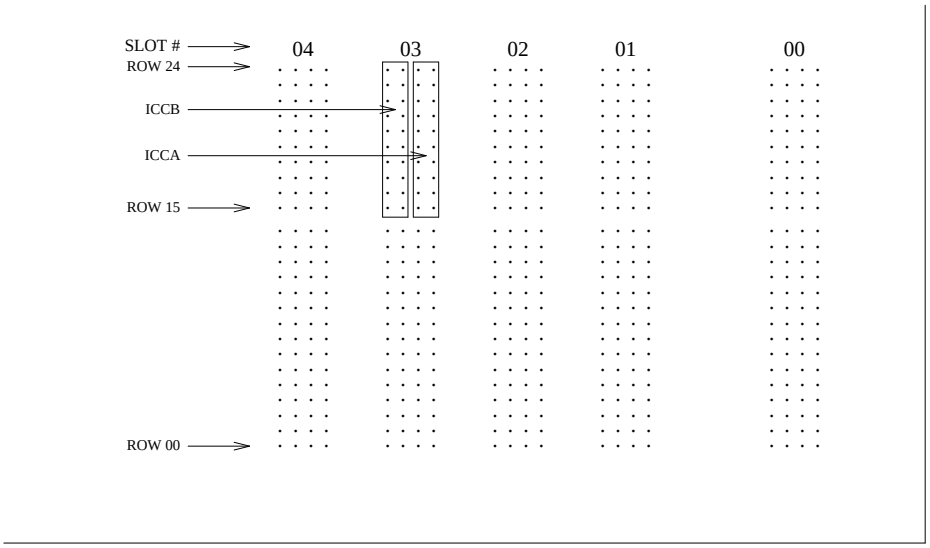

Figure 2-39. ICC Connections for Port Carrier

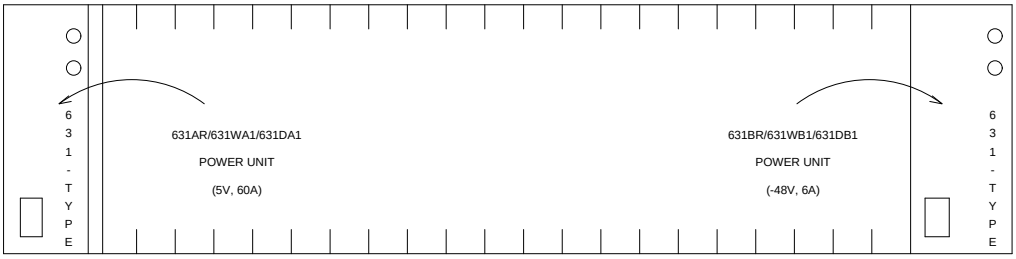

Figure 2-40. Locations of Power Units

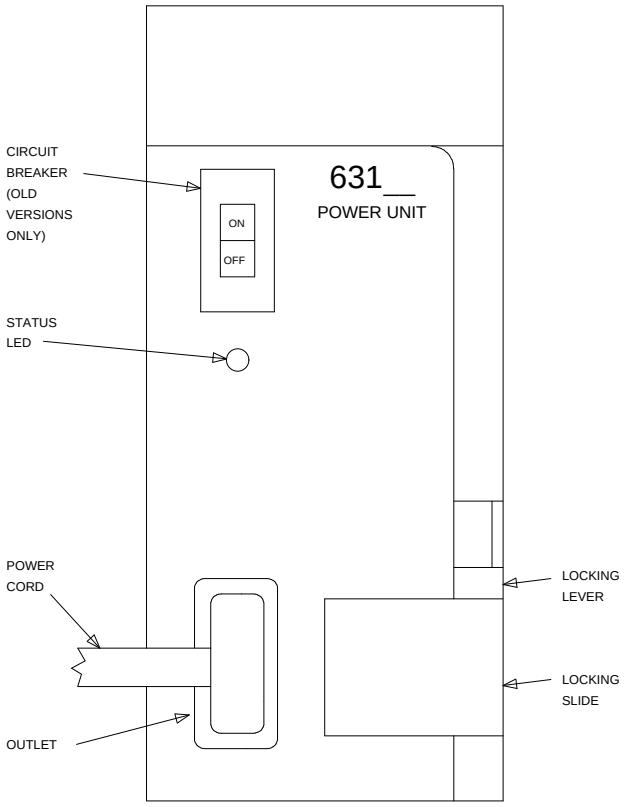

Figure 2-41. 631-Type Power Unit

Test the CURL

1. Plug the cabinet power cord into the appropriate receptacle.
2. At the power-distribution unit, set the main circuit breaker to ON.
3. Unplug the power cord from the power unit ‘‘B’’ (right-hand side) in the ‘‘A’’ carrier.
4. Verify the fans continue running. If they are not running, check the installation of the CURL.
5. Reconnect the power cord to the power unit in the ‘‘A’’ carrier, then unplug the power cord from power unit ‘‘B’’ (right-hand side) in the ‘‘B’’ carrier.
6. Verify the fans continue running. If they are not running, check the installation of the CURL.
7. Reconnect the power cord to the power unit in the ‘‘B’’ carrier.
8. At the power-distribution unit, set the main circuit breaker to OFF.

Install Circuit Packs

1. See WARNING. Install the new G3r V4 control circuit packs into EPN carriers ‘‘A’’ and ‘‘B.’’ Use the following figure, the new decal, and the annotated ‘‘list configuration all’’ (provided with the G3r V4 tape) as a guide.

   WARNING:
   Before inserting or removing a circuit pack from a cabinet, put on a wrist strap and attach its plug or clip to the cabinet’s frame.

2. See preceding WARNING and following WARNING and NOTE. Install the previously removed port circuit packs into the ‘‘A’’ carrier using the decal and the annotated ‘‘list configuration all’’ (provided with the G3r V4 tape) as a guide.

   WARNING:
   These installed port circuit packs must conform to the usable vintage requirements for a G3r V4 system (see Reference Guide for Circuit-Pack Vintages and Change Notices).

   NOTE:
   Since the new G3r V4 expansion control carrier has eleven more port slots than the removed control carrier, there should not be a need to move and retranslate these circuit packs.

   If a port circuit pack was located in slot ‘‘01’’ of control carrier ‘‘A,’’ the STS software upgrade retranslated this circuit pack to occupy an empty port slot in the new expansion control carrier.

3. See preceding WARNINGS. Install the port circuit packs previously removed into the ‘‘B’’ carrier using the decal and the annotated ‘‘list configuration all’’ (provided with the G3r V4 tape) as a guide.
4. Verify that the associated PPN is equipped with two TN570s.

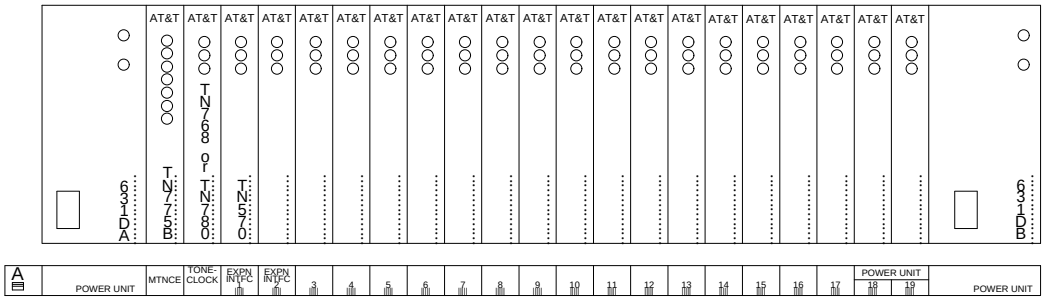

Figure 2-42. Circuit-Pack Locations in G3r V4 Expansion Control Carrier

Interconnect Port Networks

See NOTES. Fiber-optic cabling terminated to 9823A lightwave transceivers can interconnect port networks (PNs) located up to 4,900 feet (about 9/10 mile) apart. Whereas, fiber-optic cabling terminated to 9823B lightwave transceivers can interconnect port networks located up to 25,000 feet (about 4.7 miles) apart. When available and whenever the desired distance between the port networks is less than 25,000 feet, fiber is the preferred medium for interconnecting port networks, providing significantly higher-bandwidth connectivity than DS1C remoting.

NOTE:
As always, these distance limitations are approximate measurements of the *actual* fiber right-of-way (not of the shortest linear distance) between the two endpoints.

NOTE:
It is important to label every cable installed. For details, refer to the section, *Labels for Fiber-Optic Cables*, in Appendix E of the installation manual.

NOTE:
Throughout these procedures, remember to keep track of which fiber is attached to which connector on each lightwave transceiver. This section provides figures offering the suggested way of making these connections.

The connectors on the lightwave transceivers are labeled either “TX” (transmit) or “RX” (receive), while the fibers attached to each connector are numbered either ‘‘1’’ or ‘‘2.’’ A viable fiber connection is only made when both fibers in each cable (that is, ‘‘1’’ and ‘‘2’’) route from the “TX” connector of a port network to the “RX’’ connector of its adjacent port network. For an example, refer to Figure 2-44.

NOTE:
For implementation details, refer to the ‘‘Fiber Link Administration’’ sections of *DEFINITY Communications System Generic 3 V4 Implementation*, 555-230-653.

Collocated Port Networks

When a critical-reliability PPN and EPN are collocated, two fiber-optic cables (FL2P-P-XX) and four lightwave transceivers (9823-type) are required to connect the EPN.

NOTE:
For the FL2P-P-XX fiber-optic cable, the -XX suffix represents the length of the cable in feet. Based on floor-plan considerations, the length of these cables may vary. However, 20-foot cables are normally adequate for a G3r V4 with two port networks.

For collocated cabinets, the fiber-optic cables should be routed directly from the PPN to the EPN cabinet. Since, for this upgrade, a ‘‘DEFINITY style’’ PPN cabinet is next to a medium EPN cabinet, the preferred routing is to run the cables down the cable tray and out the bottom of the PPN cabinet. The cables are then run to the EPN cabinet and up the outside of the rear panels to the desired carrier level.

Fiber-Remoted Port Networks

When a critical-reliability PPN and EPN are remotely separated with fiber, four fiber-optic cables (FL2P-P-XX), four lightwave transceivers (9823-type), and four lightwave-interface units (provided by the PSC) are required.

For fiber-remoted cabinets, the cables should be routed down the cable tray and out the bottom of the cabinet to the cross-connect field where the lightwave-interface units are located.

DS1C-Remoted Port Networks

When a critical-reliability PPN and EPN are remotely separated with DS1 facilities, this arrangement requires:

- Four DS1C circuit packs (TN574)
- Four DS1C-to-EI cables (846448637 and/or 846448645)
- Four H-600-348 cables
- Two, four, six, or eight pairs of channel service units (CSUs)
- Two, four, six, or eight pairs of wall-field cables (provided with the CSUs)

In any case, use cable ties to secure the cables against the walls of the cable tray at the cable-tie positions built into the trays.

One Collocated Expansion Port Network

1. Behind port carrier C of the PPN cabinet (see Figure 2-43 and Figure 2-44):
   - Install a 9823-type lightwave transceiver on connector at slot 1C02.
   - Connect one end of fiber-optic cable to the 9823-type lightwave transceiver at slot 1C02.
   - Route the fiber-optic cable from the 9823-type lightwave transceiver to the cabinet's cable tray and downward out of the cabinet to the EPN.
2. Behind port carrier B of the EPN cabinet:
   - Install the same kind (either 9823-A or 9823-B) of lightwave transceiver on cable connector at slot 2B02.
   - Connect the fiber-optic cable, coming from port carrier C of the PPN cabinet, to the 9823-type lightwave transceiver at slot 2B02.
   - Delicately attach the fiber-optic cable (with cable ties) to the rear panels of the EPN cabinet.
   - Coil up the surplus length of fiber-optic cable, and place the coil either in the cable manager or on the bottom shelf (holding the power supply) of the PPN cabinet.
3. Behind port carrier D of the PPN cabinet:
   - Install a 9823-type lightwave transceiver on connector at slot 1D02.
   - Connect one end of a fiber-optic cable to the 9823-type lightwave transceiver at slot 1D02.
   - Route the fiber-optic cable from the 9823-type lightwave transceiver to the cabinet's cable tray and downward out of the cabinet to the EPN.

4. Behind control carrier A of the EPN cabinet:
   - Install the same kind (either 9823-A or 9823-B) of lightwave transceiver on cable connector at slot 2A01.
   - Connect the fiber-optic cable, coming from port carrier D of the PPN cabinet, to the 9823-type lightwave transceiver at slot 2A01.
   - Delicately attach the fiber-optic cable (with cable ties) to the rear panels of the EPN cabinet.
   - Coil up the surplus length of fiber-optic cable, and place the coil either in the cable manager or on the bottom shelf (holding the power supply) of the PPN cabinet.

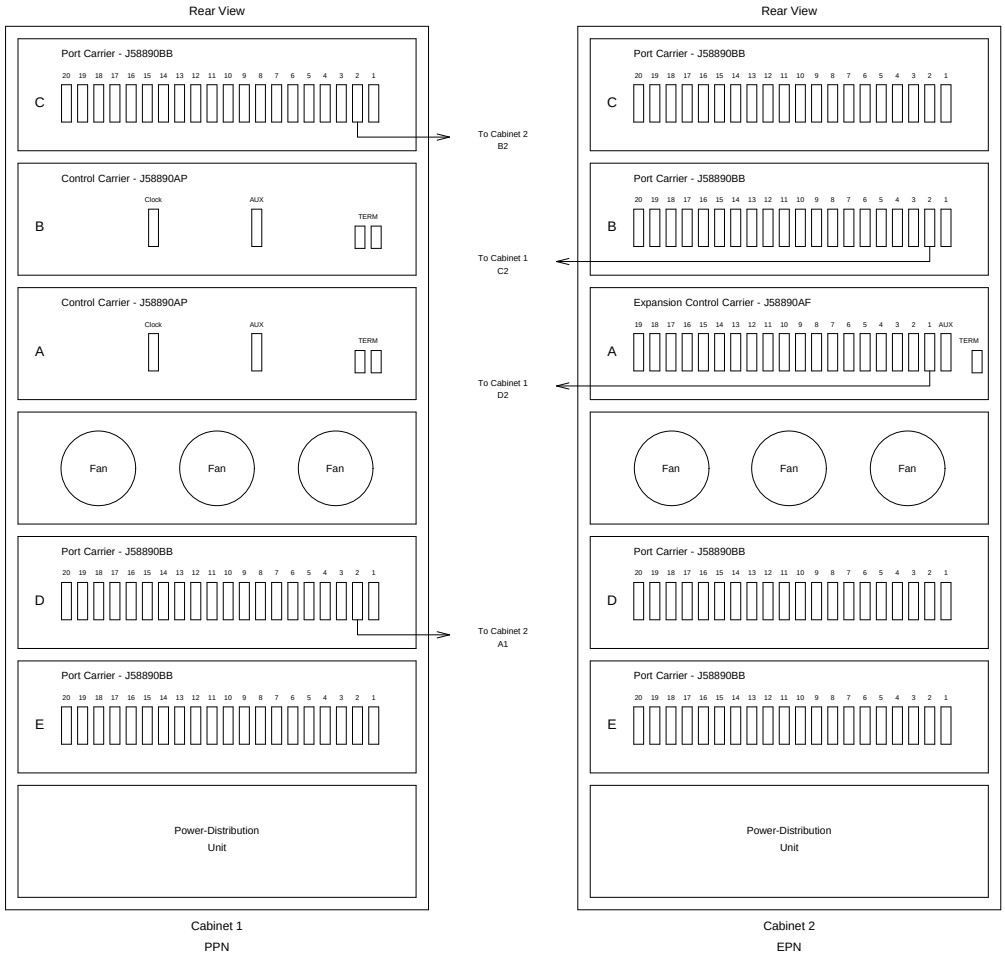

Figure 2-43. Critical-Reliability G3r V4 with Two Port Networks

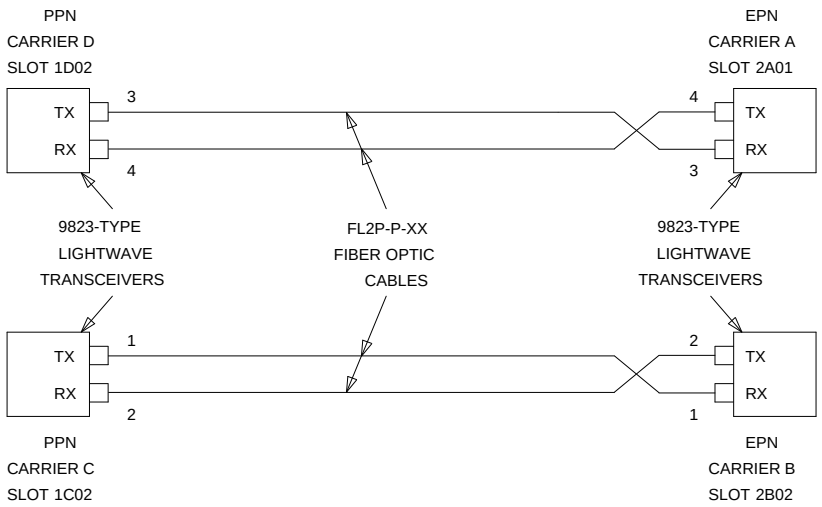

Figure 2-44. With Critical Reliability

One Fiber-Remoted Expansion Port Network

1. Behind port carrier C of the PPN cabinet (see Figure 2-43 and Figure 2-45):
   - Install a 9823-type lightwave transceiver on connector at slot 1C02.
   - Connect one end of the fiber-optic cable to the 9823-type lightwave transceiver at slot 1C02.
   - Route the fiber-optic cable from the 9823-type lightwave transceiver to the cabinet cable tray and downward out of the cabinet through the cable manager to the PDS cross-connect facility.
   - At the PDS cross-connect facility, connect the fiber-optic cable to the lightwave-interface unit provided.
   - Delicately attach the fiber-optic cable (with cable ties) to the wall of the cable tray at the built-in cable-tie positions.
2. Behind port carrier B of the EPN cabinet:
   - Install the same kind (either 9823-A or 9823-B) of lightwave transceiver on cable connector at slot 2B02.
   - Connect one end of a fiber-optic cable to the 9823-type lightwave transceiver at slot 2B02.

- Route the fiber-optic cable from the 9823-type lightwave transceiver to the cabinet cable tray and downward out of the cabinet through the cable manager to the PDS cross-connect facility.
- At the PDS cross-connect facility, connect the fiber-optic cable to the lightwave-interface unit provided.
- Delicately attach the fiber-optic cable (with cable ties) to the rear panels of the EPN cabinet.
- Coil up the surplus length of fiber-optic cable, and place the coil in the cable manager.

3. Behind port carrier D of the PPN cabinet:
   - Install a 9823-type lightwave transceiver on connector at slot 1D02.
   - Connect one end of the fiber-optic cable to the 9823-type lightwave transceiver at slot 1D02.
   - Route the fiber-optic cable from the 9823-type lightwave transceiver to the cabinet cable tray and downward out of the cabinet through the cable manager to the PDS cross-connect facility.
   - At the PDS cross-connect facility, connect the fiber-optic cable to the lightwave-interface unit provided.
   - Delicately attach the fiber-optic cable (with cable ties) to the wall of the cable tray at the built-in cable-tie positions.
4. Behind control carrier A of the EPN cabinet:
   - Install the same kind (either 9823-A or 9823-B) of lightwave transceiver on cable connector at slot 2A01.
   - Connect one end of a fiber-optic cable to the 9823-type lightwave transceiver at slot 2A01.
   - Route the fiber-optic cable from the 9823-type lightwave transceiver to the cabinet cable tray and downward out of the cabinet through the cable manager to the PDS cross-connect facility.
   - At the PDS cross-connect facility, connect the fiber-optic cable to the lightwave-interface unit provided.
   - Delicately attach the fiber-optic cable (with cable ties) to the rear panels of the EPN cabinet.
   - Coil up the surplus length of fiber-optic cable, and place the coil in the cable manager.

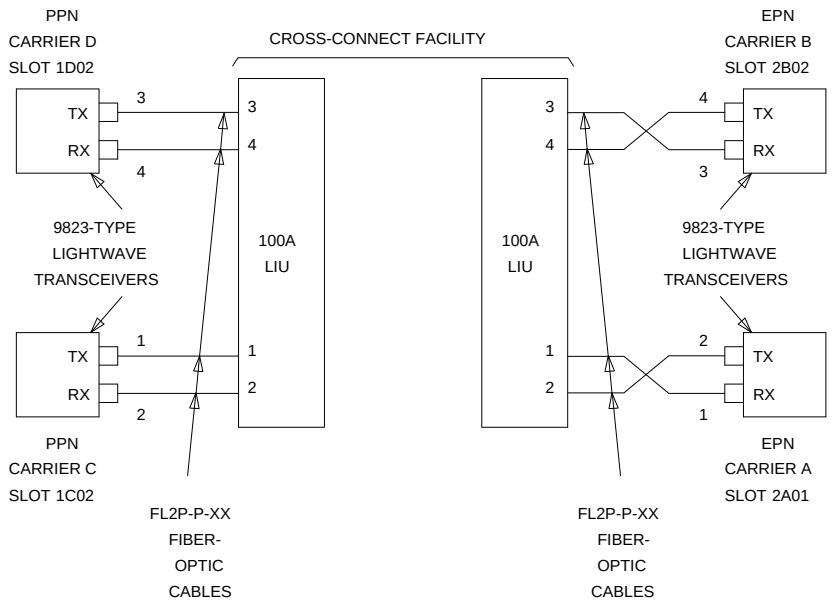

Figure 2-45. With Critical Reliability

DS1C-Remoted Cabinets

See NOTES. Digital Services 1 (DS1) facilities and associated equipment-room hardware and cabling can interconnect two port networks (PNs) located up to 100 miles apart. Although DS1 remoting always serves as a lower-bandwidth alternative to fiber remoting, DS1 remoting is especially attractive when:

- Fiber-optic cabling is unavailable to the remote site
- When the desired distance between the port networks exceeds the practical fiber limit of 25,000 feet (about 4.7 miles)
- Digital Services facilities, with enough bandwidth for interconnection, already exist between the two port networks

NOTE:
These distance limitations are approximate measurements of the *actual* fiber or copper right-of-way (not of the shortest linear distance) between the two endpoints.

NOTE:
The 100-mile limit for DS1 remoting is the maximum distance between *any* two port networks in a G3r V4 system with either direct or switched port-network connections.

For example, in a *directly connected* system, a single EPN can be remoted up to 100 miles. This is because the length of the *direct* fiber connection from any port network in the local equipment room to the remote EPN is 100 miles.

However, if more than one EPN is remoted in a directly connected system, the 100-mile limit applies to any two port networks. Assuming straight cable runs, suppose that a customer wants to remote one EPN 80 miles due east and another EPN due north of the local PPN. This arrangement can only be accommodated if the second EPN resides no more than 60 miles north of the PPN. This is because the direct fiber distance between the two EPNs is also limited to 100 miles.

As another example, in *switch-connected* system with numerous port networks, one EPN might be remoted 75 miles from the switch node. If this were the case, then the maximum distance that any other EPN could be remoted would be 25 miles.

Digital public-network tie-trunk facilities provide the end-to end connectivity between the port networks. For either type of port network (PPN or EPN), a TN574 DS1 Converter (DS1C) circuit pack serves as the port-network interface to the DS1 facilities. As a PPN interface, a TN574 DS1C can reside in either:

- A port carrier (in any port slot)
- A switch-node carrier (in port slot ‘‘1’’ or ‘‘21’’)

As an EPN interface, a TN574 DS1C can reside in an expansion control carrier (in any port slot).

DS1 Cabling within the Local Port Networks. See NOTE. Use the running list that accompanies the upgrade equipment to determine which cable should be connected where. The following paragraphs only provide conceptual information about wiring a DS1C interface either to an expansion interface or to a switch-node interface, not step-by-step procedures for wiring a specific G3r V4 system.

NOTE:
It is important to label every cable that you install. For details, refer to the section, *Labels for Fiber-Optic Cables*, in Appendix E of the installation manual.

See NOTE. As shown in Figure 2-46, a cable connects each DS1C either to the appropriate TN570 expansion interface (for a direct connection to another port network) or to the appropriate TN573 SN Interface (for a switched connection to another port network).

NOTE:
For the purposes of an R1V3 to G3r V4 upgrade, this cable will usually connect to a TN570 expansion interface (already installed) for a direct connection between the new PPN and the upgraded EPN.

On the DS1C side, a 4C retainer binds this shielded cable to the DS1C port connector. On the EI/SNI side, a 4B retainer binds the cable to the EI/SNI port connector. The DS1C-to-EI/SNI cable also provides a piggy-back connector enabling subsequent access to the public network. Table 2-11 lists the cable numbers and lengths for the possible connections.

Table 2-11. Numbers and Lengths of DS1C-to-EI/SNI Cables

Connection Type	Comcode Number	Length
Within same carrier	846448637	1 foot
Between two carriers in same port network	846448645	5.5 feet
Between two carriers in adjacent networks	846448652, and one 846885259 bracket	1 foot (used with two 9823As, & one 20-foot fiber-optic cable)

DS1 Cabling to the Public Network. See NOTE. Use the running list that accompanies the upgrade equipment to determine which cable should be connected where. The following paragraphs only provide conceptual information about wiring a DS1C interface to a wall-field block, not step-by-step procedures for wiring a specific G3r V4 system.

NOTE:
It is important to label every cable that you install. For details, refer to the section, *Labels for Fiber-Optic Cables*, in Appendix E of the installation manual.

Figure 2-46 also shows the cabling between various port networks and the cross-connect field where the public network is accessed. If already connected to either an expansion or switch-node interface, a DS1C circuit pack already resides either in an EPN expansion control carrier or in a PPN port carrier or switch-node carrier.

Depending on the traffic requirements between the two port networks, a 25-foot H600-348 cable extends from the piggy-back connector (on each DS1C-to-EI/SNI cable) to from one to four channel service units (CSUs). [This cable branches to four 15-pin subminiature D-type connectors (labeled ‘‘01’’ to ‘‘04’’) to make the CSU connections.] Then, in turn, the CSU(s) are connected to the wall-field block (corresponding to the equipment location of the DS1C) at port connections ‘‘8,’’ ‘‘7,’’ ‘‘6,’’ and ‘‘5’’ (in descending order).

Neglecting overhead, this wiring arrangement can provide PN-to-PN communication at the bandwidth of up to four DS1 spans (1.544 Mbps each). Between each port network’s wall field, the port networks communicate across leased lines in the public network.

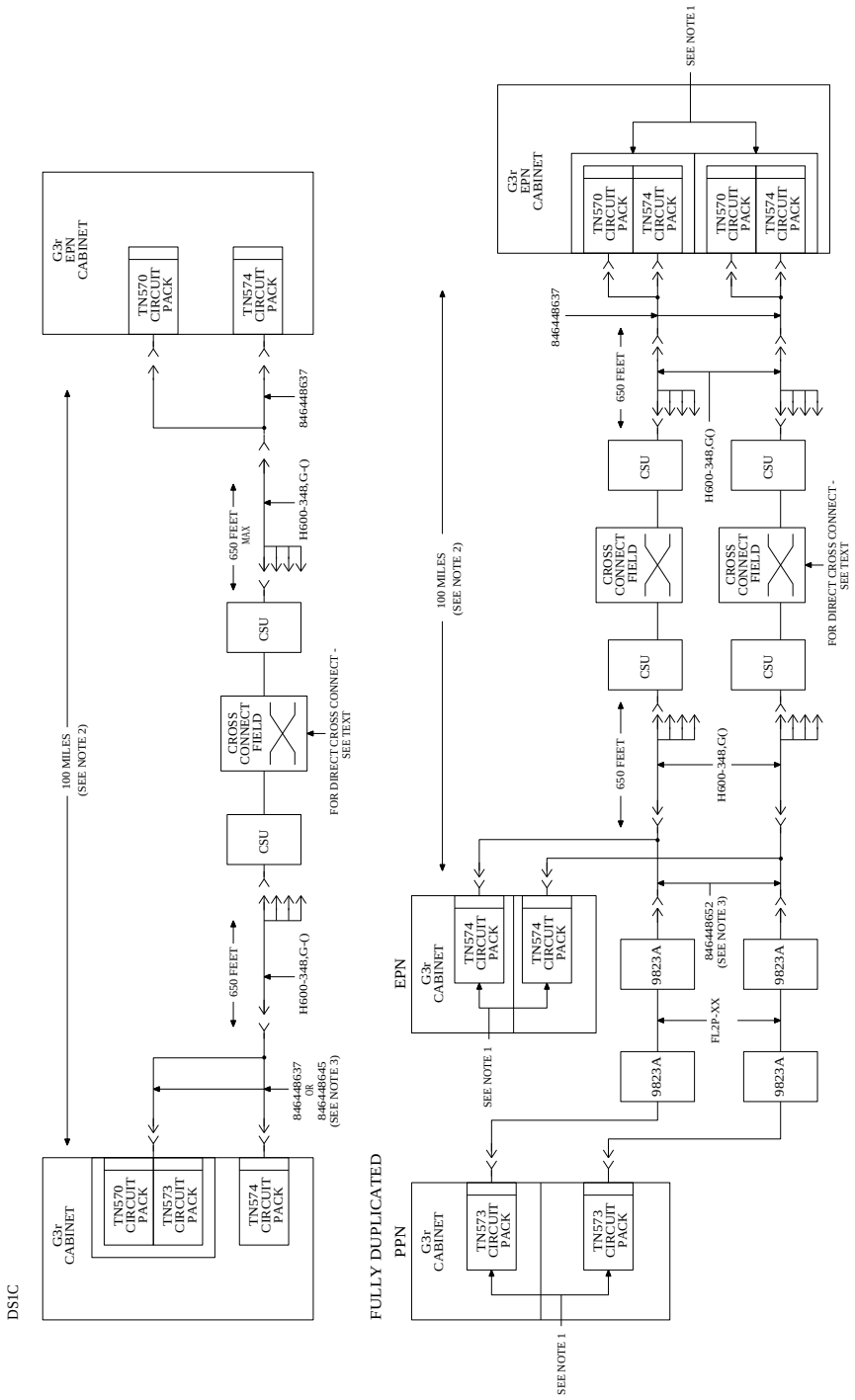

Figure 2-46. DS1 Connectivity Between Remote PNs

Verify Usable Circuit-Pack Vintages

Verify that every R1V3 circuit pack reused in the upgrade conforms to the usable vintage requirements for a G3r V4 system (see Reference Guide for Circuit-Pack Vintages and Change Notices).

Install System Access Ports

As a prerequisite for connecting various endpoints that use EIA interfaces to the G3r V4 system, install the up to eight loop-around connections for Mode 2-to-Mode 3 (and vice versa) data conversion.

From the *outgoing* perspective of the system communicating with an EIA endpoint, these loop-around connections convert Mode 3 data (circuit-switched packet data, with undefined bit rates and packet specifications) to Mode 2 data (low-speed, usually asynchronous, data at rates of 300 to 19,200 bps) by:

- Accepting Mode 3 data off the LAN bus (from the SPE) at a TN553 Packet Data Line circuit pack, where Mode 3-to-Mode 2 conversion is done
- Routing the converted data through the cross-connect field and back to a TN726B Data Line where the equivalent Mode 2 data can access the TDM bus, for subsequent routing to an EIA endpoint

The endpoints that use these EIA interfaces and, therefore, require the Mode 2-to-Mode 3 conversion include:

- DEFINITY Communications System Generic 3 Management Applications (G3-MA)
- Remote DEFINITY Communications System Generic 3 Management Terminal (G3-MT)
- Basic Call Management System (BCMS) terminal
- Call Detail Recording Unit (CDRU)/Centralized Attendant Service Plus (CAS+)
- Property Management System (PMS)
- Printers

The following figures show this loop-around configuration and how the B25A cables are cross-connected.

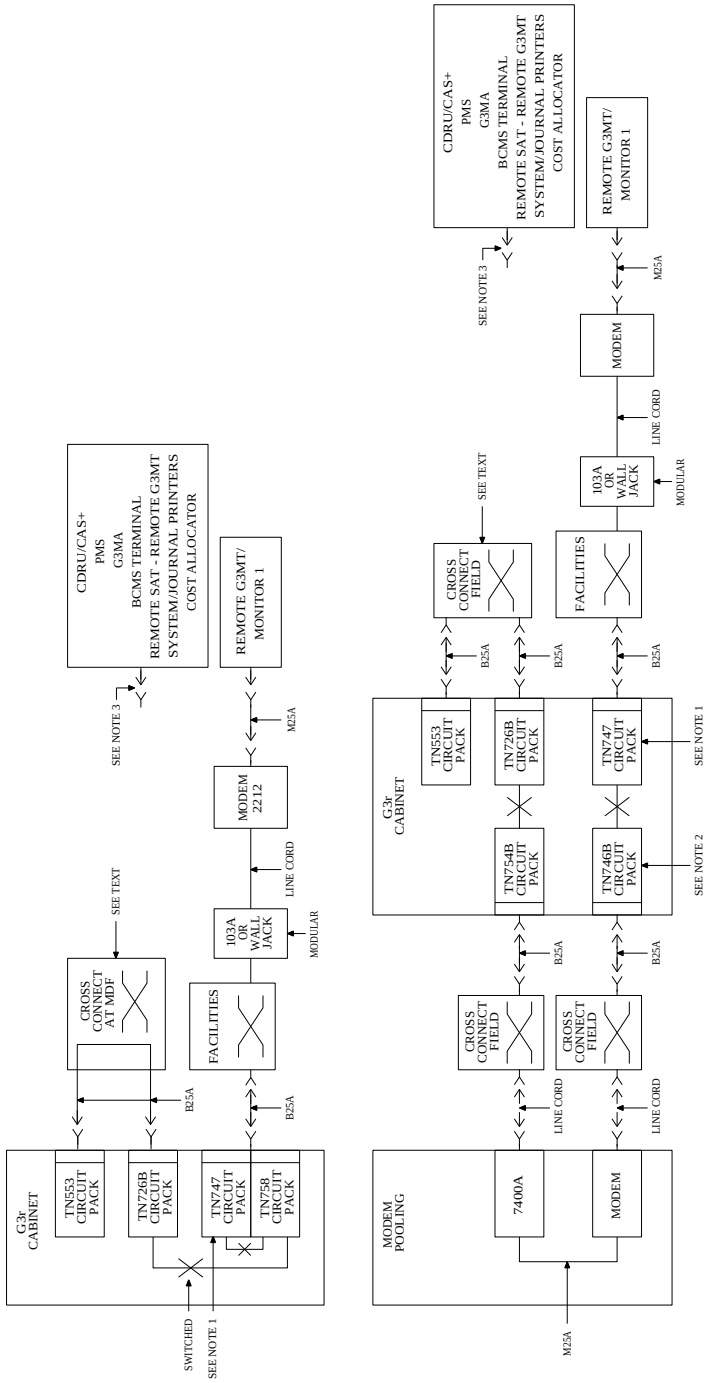

Figure 2-47. Connections: CDRU/CAS+, PMS, BCMS, Printers, G3-MA/MT

Pinouts for the TN553 and TN726B circuit packs shown cross-connected in the preceding figure are given in the table below.

Pinouts

TN553 (12 Ports)

1	26	
2	27	1
3	28	
4	29	2
5	30	
6	31	3
7	32	
8	33	4
9	34	
10	35	5
11	36	
12	37	6
13	38	
14	39	7
15	40	
16	41	8
17	42	
18	43	9
19	44	
20	45	10
21	46	
22	47	11
23	48	
24	49	12
25	50	G

TN726B (8 Ports)

1	26	Blank
2	27	
3	28	1
4	29	Blank
5	30	
6	31	2
7	32	Blank
8	33	
9	34	3
10	35	Blank
11	36	
12	37	4
13	38	Blank
14	39	
15	40	5
16	41	Blank
17	42	
18	43	6
19	44	Blank
20	45	
21	46	7
22	47	Blank
23	48	
24	49	8
25	50	Blank

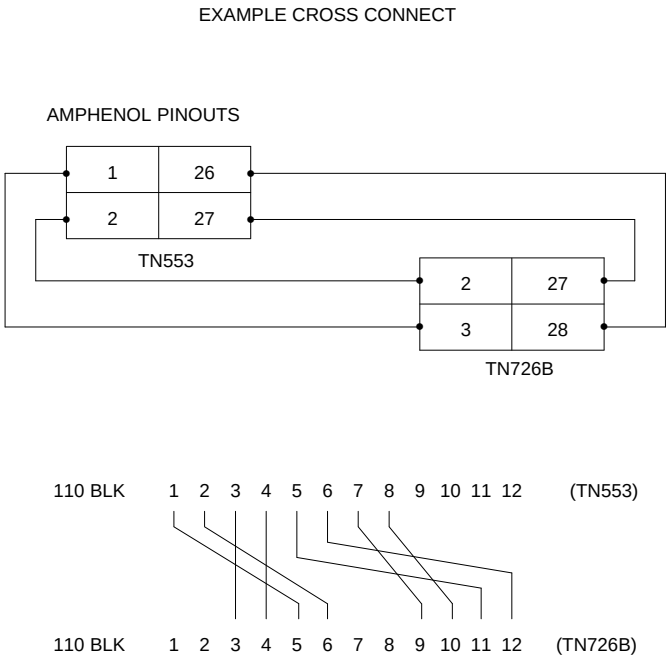

Figure 2-48. Example of Cross Connect between TN553 and TN726B

Reseat DEFINITY AUDIX System

See WARNING. If a DEFINITY AUDIX System resides in the system, reseat the AUDIX assembly to its backplane connectors.

WARNING:
Before inserting or removing a circuit pack from a cabinet, put on a wrist strap and attach its plug or clip to the cabinet's frame.

Remove Power-Failure Ground Strap

Remove the previously installed ground strap from the power-failure transfer unit.

Reboot the System

1. Connect the G3-MT to the connector labeled ''TERMINAL'' behind PPN control carrier ''A,'' or install the G3-MA according to the ''Set Up G3-MA'' chapter of *DEFINITY Communications System Generic 3 Management Applications Operations*, 585-229-202.
2. Verify that the new G3r V4 system tape is inserted in the PPN cabinet.

3. At the EPN power-distribution unit, set the main circuit breaker to ON.
4. At the PPN power-distribution unit, set the main circuit breaker to ON.
5. The system now goes through the reset level 4 rebooting process, loading blank translations from the *disk* (not the new tape). Rebooting requires 5 to 11 minutes.
6. Enter **`reset system 4 tape`**. Press (RETURN). This command instructs the system to go through the reset level 4 rebooting process, loading the upgraded STS translations from the new *tape*. Rebooting requires 5 to 11 minutes.

   Refer to ''Initialization and Recovery'' and ''LED Interpretation'' chapters in *DEFINITY Communications System Generic 3r V4 Maintenance*, 555-230-105, Issue 3, for circuit-pack LED indications and screen displays that occur during system reboot.
7. Log in at the `login:` prompt on the G3-MT or G3-MA, and set the time to ensure that the system is booted properly.
8. Enter **`status spe`**, and press (RETURN) to verify that the standby SPE is refreshed and that the standby disk is in service.
9. Enter **`restore disk both full`**. Press (RETURN). This command instructs the system to write the upgraded STS translation information from memory to the disks.
10. Enter **`reset system 4`**. Press (RETURN). This command instructs the system to go through the reset level 4 rebooting process, loading the upgraded STS translations from the *disk*. Rebooting requires 5 to 11 minutes.

    NOTE:
    Certain forms have changed for G3r V4. Upgraded R1V3 translations may appear on a different form, fields may have shifted within a form, and/or the names assigned to particular fields may have changed. Refer to Table 2-1 and to *DEFINITY Communications System Generic 3r Transition Reference*, 555-230-636, and *DEFINITY Communications System Generic 3 V4 Implementation*, 555-230-655, and make the necessary changes.

Relabel Wall Field

If not done during the installation of new PPN, relabel the wall field with the new port-network number of the upgraded G3r V4 EPN. (For an upgrade of an R1V3 system, the STS software upgrade assigned port-network number ''2'' to the upgraded EPN.)

Close EPN Cabinet and Reconnect Cables

1. At the EPN power-distribution unit, set the main circuit breaker to OFF.

   NOTE:
   Powering down the EPN without powering down the PPN will set off alarms. However, these alarms should clear after power is restored to the EPN.

2. Temporarily disconnect the lightwave transceivers and fiber-optic cables, already labeled, from the appropriate carriers.
3. Replace the back panels previously removed.
4. At the EPN cabinet, reconnect the lightwave transceivers, fiber-optic cables, and the connector cables associated with the carrier being replaced.
5. Install the front door on the EPN cabinet if previously removed.
6. Install a DEFINITY label on the EPN cabinet.

Power Up the EPN Cabinet

1. At the EPN power-distribution unit, set the main circuit breaker to ON.

   After about 40 seconds, EPN power and PPN/EPN communications return.

2. After power returns to the EPN and all trouble is cleared, verify that the EMERGENCY TRANSFER CONTROL switch is set to AUTO. This restores the system to the normal mode.

Retranslate Port Circuits

If port circuit packs in the R1V3 control carrier were relocated in order to put:

- A critical port circuit pack, requiring longer nominal battery holdover (e.g., a DS1 or an Announcement circuit pack), in a port slot
- A TN736, TN752, or TN755 power supply in port slots ‘‘18’’ and ‘‘19’’
- A TN570 Expansion Interface in port slot ‘‘1’’
- A TN570 Expansion Interface in port slot ‘‘2’’ (for a simultaneous EPN addition)

of the new expansion control carrier, verify that they were retranslated during the off-site software upgrade. If not, they must be retranslated now. Refer to *DEFINITY Communications System Generic 3 V4 Implementation*, 555-230-655, for instructions on performing the retranslations.

Rerecord Announcements

The off-site STS translation upgrade did not preserve the contents of recorded announcements. Therefore, if a TN750 Announcement circuit pack resides in the system, any announcements that were stored on the circuit pack must be rerecorded.

Run Acceptance Tests

Refer to Chapter 11 of *DEFINITY Communications System Generic 1 and Generic 3 Installation and Test*, 555-230-104, Issue 5, and perform the appropriate tests.

Register System as G3r V4

Get the serial number of the new G3r V4 PPN, and call the INADS Database Administrator at the Technical Service Center (1-800-248-1111) to register the upgraded system as a G3r V4.

Return Replaced System 75 Equipment

The System 75 equipment replaced, during the upgrade to G3r V4, should be returned to AT&T according to the requirements outlined in:

BCS/Material Logistics, MSL/Attended Stocking Locations

Methods and Procedures for Basic Material Returns

The replaced System 75 equipment includes:

- System 75 control carrier and control circuit packs
- System 75 tone-clock circuit pack
- RMSS or HCMR tape drive
- R1V3 tape cartridges
- TDM cables (ED-67086-10) and cable adapters (AHF3)
- TDM bus terminators (AHF1)

Small Multicarrier R1V3 to G3r V4

3

This chapter provides the information necessary to upgrade the System 75 small cabinet from a Release 1 Version 3 (R1V3) system to a DEFINITY® G3r V4 system with standard, high, or critical reliability. The hardware and software involved in the upgrades and the upgrade procedures are also provided.

CAUTION:
Be careful to find the right chapter for your upgrade. Using the software- and sometimes the hardware-upgrade PEC on the customer's order, refer to Table 1 in "About This Document" for the correct chapter.

Like upgrades to G1, any new cabinets, shipped by the factory to fulfill the upgrade order, are the new "DEFINITY style" of multicarrier or single-carrier cabinets. Whereas, the R1V3 cabinet to be upgraded is an old-style small cabinet. Although the new G3r V4 cabinet(s) and the upgraded G3r V4 cabinet will look different, they can be used together.

The following processes are required for a Version 3 to G3r V4 upgrade:

- Upgrading the hardware

  This involves adding a new multicarrier PPN cabinet, replacing the control carrier with an expansion control carrier, and replacing and adding circuit packs

- Replacing the software tape
- Upgrading the software

  This involves saving, loading, and (when necessary) reentering system translations (see Table 3-1).

- Testing the upgraded system to verify proper operation

G3r V4 features and functions are listed in the *DEFINITY Communications System Generic 3 Feature Description*, 555-230-204. *DEFINITY Communication System Generic 3 V4 Implementation*, 555-230-655, provides the commands, procedures, and forms required to initialize and administer the G3r V4.

Considerations

Service Interruption

The upgrade process requires a service interruption. This service interruption must be closely coordinated with the customer and the local account team.

Communication between Equipment Rooms

For an upgrade where some of the equipment resides at a remote location, the upgrade activity will be much easier if temporary communications are established between the equipment rooms.

Contact Network Technicians

The technician for each public and private network accessed by the switch must be contacted before the upgrade begins. Otherwise, if these technicians are not aware of the service interruption caused by the upgrade, it is possible that network-access trunk facilities will be busied out at the far end.

Relocation of Port Circuit Packs

With the exception of a port circuit pack in slot ‘‘01’’ of carrier ‘‘A’’ that must be moved for a TN570 Expansion Interface, a small R1V3 upgrade to G3r V4 *does not* cause port circuit packs, from the R1V3 control carrier, to be moved and manually retranslated. This is because an R1V3 is always upgraded to an EPN. So, during the cabinet upgrade to a G3r V4 EPN, a G3r V4 expansion control carrier (with 18 available port slots) always replaces the R1V3 control carrier (with either 8 or 12 available port slots), providing a net gain of either 6 or 10 port slots.

See NOTE. If a port circuit pack does reside in slot ‘‘01’’ of control carrier “A,’’ the STS software upgrade will retranslate this circuit pack to occupy an empty port slot in the new expansion control carrier.

For an upgrade to a critical-reliability G3r V4, if a port circuit pack resides in slot ‘‘02’’ of port carrier ‘‘B,’’ the STS software upgrade will retranslate this circuit pack to occupy another empty port slot in the new expansion control carrier.

Also, to provide maximum holdover for a TN750/B Announcement circuit pack that did not reside in the control carrier of the R1V3 system, the STS software upgrade will relocate this circuit pack to occupy another empty port slot in the new expansion control carrier.

Also, to ensure reliable DS1 timing in the upgraded G3r V4 system, the STS software upgrade will relocate the DS1 circuit packs serving as the primary and secondary timing sources to occupy two empty port slots in the new multicarrier PPN.

Finally, when adjuncts are connected to an upgraded G3r V4, STS will locate any new interface circuit packs (including TN577 Packet Gateway, TN553 Packet Data, and TN726B Data Line) in the first available slots of the first PPN port carrier.

NOTE:
To find out where STS relocated these circuit packs, refer to the annotated "list configuration all" that STS provided with the new G3r V4 tape.

Usable Circuit-Pack Vintages

Every circuit pack used in the upgraded G3r V4 system must conform to the minimum usable vintage requirements for G3r V4. Those circuit packs shipped in the new G3r V4 PPN or shipped loose with the new EPN equipment should always meet the usable vintage specifications. In addition, at a presale site inspection, the Quality Protection Plan Change Notice (QPPCN) process must check the vintages of every R1V3 circuit pack that will be reused in the upgraded G3r V4 and, if necessary, replace those circuit packs that have unusable vintages. Refer to *Technical Monthly*, Reference Guide for Circuit-Pack Vintages and Change Notices, for current information about usable vintages in a G3r V4 system.

Power and Grounding

The new multicarrier PPN cabinet or any EPN cabinet added for the upgrade can be either AC- or DC-powered. If an added cabinet is powered differently from an existing cabinet, the existing cabinet does not have to be converted since mixed power configurations are allowed. However, the system's power and grounding must be modified so that the AC-powered cabinet is grounded to the same single-point ground bar as the DC-powered cabinet (see Figure 3-1).

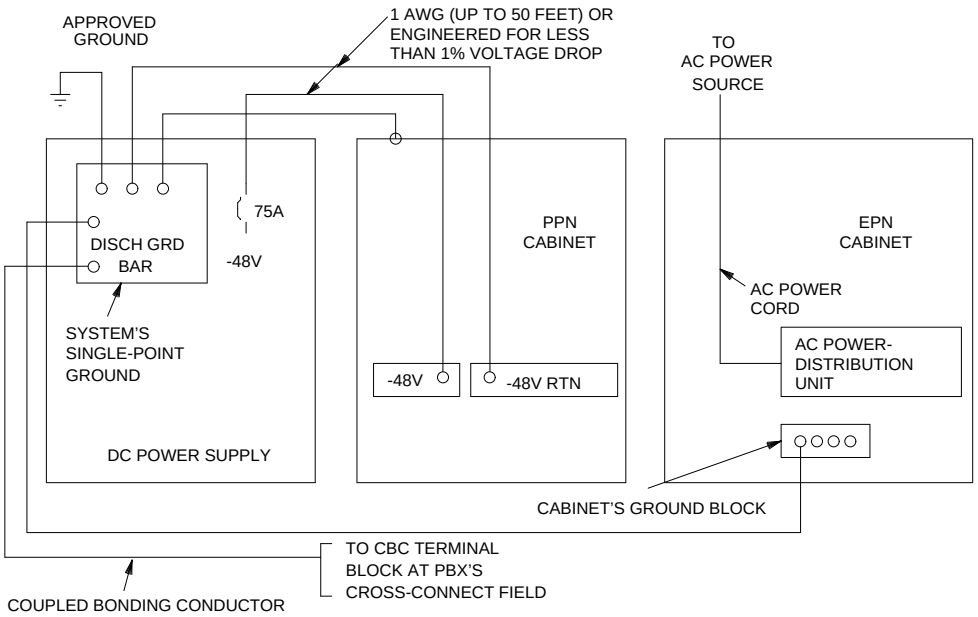

Figure 3-1. Typical Power and Grounding Arrangement for a Mixed AC/DC-Powered Multicabinet Configuration

See NOTE. If a new AC-powered cabinet is to be added, a separate AC receptacle is provided to support the new cabinet. This AC receptacle must not be shared with any other equipment and must not be controlled by a wall switch. For the convenience and safety of equipment-room personnel, the receptacle should not be located under the cross-connect field.

NOTE:
In contrast to the AC power that is likely to be currently available in an R1V3 equipment room, the new AC-powered PPN added for a G3r V4 upgrade uses 4-wire, 30A, 208 VAC power. Whereas, the R1V3 small cabinet used 3-wire, 20A, 115 VAC power.

If a new DC-powered cabinet is to be added, refer to *DEFINITY Communications System Generic 1 and Generic 3 Installation and Test*, 555-230-104, Issue 5, for DC power and grounding requirements.

116A Isolator

Each G3-MT connected to a DC-powered cabinet, via the asynchronous Electronic Industries Association (EIA) RS-232 interface (behind a PPN control carrier or behind an EPN expansion control carrier), requires a 116A isolator.

The isolator is inserted at the RS-232 interface between the G3-MT and the interface connector to isolate grounding between the system and external adjuncts.

Power-Failure Stations

During routine switch operation, the ground for the power-failure stations is derived from the system's auxiliary cable. This ground will be disconnected during the upgrade, thus disabling the power-failure stations. Therefore, a ground strap will have to be run to the power-failure transfer panel. This strap should be connected shortly after power is removed and then disconnected just before power is restored to the upgraded system.

To minimize downtime during the G3r V4 upgrade, power-failure transfer equipment should be tested and, if need be, repaired before the hardware upgrade begins.

Software

The G3r V4 system software and translations will be saved on the TN1656 Tape Drive circuit pack. This tape format is not compatible with either the HCMR- or RMSS-formatted tapes.

The translations in the R1V3 system must be copied to a spare tape and sent to Software Technical Support (STS) to be converted and written to a G3r V4 tape. This process takes two weeks. The G3r V4 tapes (including one with translations) must be on-site before the upgrade can begin. Two tapes (one system tape and one backup tape) must always be retained on site with the R1V3 system.

After a software upgrade, several features require special attention because of form changes or potential naming conflicts in the upgrade process. Most of these changes and conflicts are related either to a software upgrade from standard ACD to Call Vectoring or to changes in the ARS/AAR features to compensate for increasing uncertainty in the North American numbering plan. Also, if ARS is enabled (when upgrading from IR1V4 to GD-91 software), it may be necessary to modify the Call Type field on the ARS Analysis form to "unk" for all call types except "iop" or "int."

Table 3-1 contains a list of implementation forms that are either new or changed for G3r V4.

After the upgrade, the Software Associate should check these forms to ensure that the upgraded translations are appropriate for the customer's needs. Refer to *DEFINITY Communications System Generic 3r Transition Reference*, 555-230-636, and *DEFINITY Communications System Generic 3 V4 Implementation*, 555-230-655, for information to make any required changes.

Table 3-1. Changed/New Administration Forms for G3r V4

From R1V3	To G3r V4
ARS fnpa	ARS Digit Analysis
ARS hnpa	ARS Digit Analysis
Allowed Call List	Toll Analysis
Code Restriction fnpa	Toll Analysis
Code Restriction hnpa	Toll Analysis
Interexchange Carrier	Interexchange Carrier
Permanent Switched Calls	Administered Connections
RNX Table	AAR Digit Analysis
Ten-Seven Digit Conversion	ARS/AAR Digit Conversion
None (Note)	Alias Station
None	Alphanumeric Dialing
None	Call Vector
None	Signaling Group
None	Access Endpoints
None	Vector Directory Number

NOTE:
"None" represents a new form for G3r V4.

Alarm Connections

See NOTE. The AUXILIARY connector on System 75 systems had appearances for Alarm Monitors 1M, 1m, 2M, 2m, 3M, 3m, and 3W. Whereas, the AUXILIARY connector on a DEFINITY G3r V4 PPN only has appearances for 1M and 1m. If the system being upgraded used the other alarm-monitor appearances, they can either be distributed to the AUXILIARY connector on a G3r V4 EPN, or "ganged" so that several external devices share the same appearance. The alarms can also be accommodated by paralleling them to the above connections.

NOTE:
When several external devices are ganged to the same appearance, each device loses its individual identity. An alarm on a shared appearance only denotes that one of several devices reported a problem. Subsequent maintenance effort is needed to determine which device reported the problem and the nature of the problem.

The control circuit pack behind the AUXILIARY connector detects external alarms with a ground-detector chip. Therefore, to gang several external devices, every device must be able to return a true relay ground closure to the AUXILIARY connector. (Alternatives, such as a TTL low driver, are inadequate.)

Software-Translation Upgrade

The G3r V4 system software and translations will be saved on the TN1656 Tape Drive circuit pack. This tape format is not compatible with either the HCMR- or RMSS-formatted tapes.

During an upgrade from an R1V3 to a G3r V4, STS must convert the R1V3 translations and write them to a G3r V4 tape. To enable this tape conversion, replace the system tape with a spare R1V3 tape. (Spare R1V3 tape cartridges can be acquired from the QPPCN before the upgrade.) Then, copy the current R1V3 translations to the spare tape, and overnight mail this tape to STS. Also, put the original system tape back into the system.

If possible, the customer should put a freeze on any new translations while the spare tape is being converted. If not, be sure that the customer's switch administrator keeps detailed records of any translation changes made during that interval. These records will facilitate the reassignment of any changes on the G3r V4 tapes after the upgrade.

The new G3r V4 tapes (one with the converted translations, two if duplicated and the rest blank) must be on-site before the upgrade begins.

When an R1V3 system is upgraded to a G3r V4, the tape-conversion software will assign port network "1" to the new G3r V4 PPN and port network "2" to the EPN derived from the small R1V3 cabinet.

Save Translations

1. Log in at the Manager I on the R1V3.
2. Enter **`save translation`**. Press (RETURN). This command instructs the system to write all translation information from memory to the tape.
3. If the system is equipped with a TN750/B Announcement circuit pack, enter **`display announcements`**, and press (RETURN).

   If administered recorded announcements are listed, enter **`list configuration software-version`**, press (RETURN). Check Page 2 of this form to find out when the announcements were last saved, and ask the customer whether any announcements have changed since then.

   If so, the current announcements can be saved using the save announcements command. Enter `save announcements`, and press (RETURN).

4. Remove the system tape, install the backup tape, and wait for the tape to retension.
5. Enter **`save translation`**. Press (RETURN).
6. Enter **`save announcements`** if appropriate. Press (RETURN).

Make Source Tape for Upgrade

A spare R1V3 tape must be acquired from the QPPCN before performing the following steps. There must always be two system tapes on site with the System 75. Do not send the system or backup tape to STS.

After performing the previous procedures, copy the R1V3 translations to the spare tape that will be used to make the G3r V4 tapes. Perform the following procedures:

1. Remove the backup tape, install the spare tape, and wait for the tape to retension.
2. See NOTE. Enter **`save translation`**. Press (RETURN). This command instructs the system to write all translation information from memory to the tape.

   NOTE:
   The off-site STS translation upgrade does not preserve the content of recorded announcements. Therefore, during the upgrade, any announcements stored on a TN750/B circuit pack must be rerecorded.

3. Remove the source tape.
4. Insert the system tape.

The tape removed in Step 3 should be mailed (with next-day delivery) to STS for use in making the G3r V4 tapes.

System Upgrades

There are many configurations of small-cabinet R1V3 System 75s in the field. In terms of both hardware and software, each system can have a unique configuration. However, to simplify G3r V4 upgrades, the existing small cabinet is always upgraded to an EPN. A new multicarrier cabinet would then always serve as the PPN. It is also possible that two existing R1V3 systems could be upgraded as two EPNs in the same G3r V4 system.

This section gives a sequential list of the steps required to upgrade the R1V3 system.

R1V3 Small to G3r V4 EPN with Standard Reliability

See NOTE. Refer to *DEFINITY Communications System Generic 1 and Generic 3 Installation and Test*, 555-230-104, Issue 5, to install the new PPN cabinet.

NOTE:
During the wall-field wiring of the PPN installation, the wall field can also be relabeled with the new port-network number of the R1V3 system to be upgraded. (For an R1V3 system, the STS software upgrade assigned the upgraded EPN as port network ‘‘2.’’)

If a second EPN is being added, refer to *DEFINITY Communications System Generic 1 and Generic 3 Installation and Test*, 555-230-104, Issue 5, to install the new EPN.

Cabinet Upgrade

A small R1V3 System 75 is upgraded to a standard-reliability G3r V4 EPN by:

- Removing the tape-drive unit
- Removing the TDM cables, cable adapters, and terminators
- Removing the control carrier in position ‘‘A’’
- Installing the J58890AF-1 expansion control carrier in position ‘‘A’’
- Installing the new TDM/LAN cables and terminators
- Adding the G3r V4 circuit packs to the EPN
- Restructuring the port circuits as required

Prerequisite Hardware

The equipment in Table 3-2 *must* be on-site before the upgrade begins. Ensure that the tapes are G3r V4 tapes.

To place a claim for missing equipment, as part of the Streamlined Implementation process, call "1-800-772-5409," and respond to the call prompter.

Table 3-2. Required Hardware

Equipment	Description	Quantity
PEC 6300-07X	Processor Port Network	1
J58890AF	Expansion Control Carrier	1
106647985	TN775B Maintenance	1
103557211	TN768 Tone-Clock	1
or		
103557336	TN780 Tone-Clock	1 (Note 5)
or		
106706955	TN2182 Tone-Clock	1 (Note 6)
103281788	TN570 Expansion Interface	2 (Note 1)
J58890TF	Tape Cartridge	2
105691158	CFY1 Current Limiter	1
63300A	FL2P-P-XX Fiber Cable	1 (Note 2)
106455348	9823-A Lightwave transceiver	2 (Note 3)
or		
106455363	9823-B Lightwave transceiver	2 (Note 3)
J58890A L20	WP-91716 L6 TDM/LAN Cable	1 (Note 4)
103960456	ZAHF4 TDM/LAN Bus Terminator	2
105731202	176A Apparatus Blank (for removed tape drive)	1
846309466	DEFINITY Label	1

Notes:

1. Two are required for a standard-reliability switch with two port networks. One TN570 is shipped loose with the EPN equipment. The factory has installed the other TN570 in the new PPN.
2. Two are required if PPN and EPN are remotely located.
3. Two are shipped with the EPN equipment. One is used in the PPN.

4. Comes attached to the J58890AF carrier.
5. Use TN780 as Tone-Clock for Stratum 3 timing. Also required with the TN780 are the TN748, and TN744 for tone-detection.
6. The TN2182 Tone-Clock provides tone detection, tone generation, and tone-clock in one circuit pack, and it replaces the TN756, TN768, and TN780 circuit packs, while providing the same functionality as the TN748 and TN420 circuit packs.

Required Tools

The following tools and items may be required during the upgrade:

- High-intensity flashlight or AC drop light
- 3/8-inch flat-blade screwdriver with a 10-inch shank (minimum)
- 5/16-inch and 1/4-inch sockets with a ratchet and 10-inch extension
- Power screwdriver (optional)
- Long-nose pliers to disconnect grounding straps and straighten backplane pins
- Static-proof or original circuit-pack packaging for transporting circuit packs
- Labels for identifying the port circuit packs and cables attached to the rear of cabinets
- Receptacle for holding approximately 100 self-tapping screws
- 12 spare #12 and #10 self-tapping screws
- 4 spare carrier grounding straps
- Authorized wrist grounding strap
- Repair kit for backplane pins (KS-22876 L2 or equivalent)
- One copy of each of the following manuals:
  - *DEFINITY Communications System Generic 3r V4 Maintenance*, 555-230-105, Issue 4
  - *DEFINITY Communications System Generic 3 V4 Implementation*, 555-230-655

Preventive Maintenance

During the G3r V4 upgrade, follow routine preventive maintenance procedures on the system to be upgraded. For information about the procedures and necessary equipment, refer to the “Preventive Maintenance’’ section in *DEFINITY Communications System Generic 3r V4 Maintenance*, 555-230-105, Issue 4.

Verify System Status

Before proceeding, the system should be examined for alarms, and every problem should be corrected. The system must be alarm-free.

Label Cables

To make reconnecting the cables simpler and more reliable, label both ends of the connector cables associated with the carrier to be removed (if not already labeled).

Shut Down DEFINITY AUDIX System

1. See WARNING. If a DEFINITY AUDIX System resides in the system to be upgraded, shut down the AUDIX assembly and allow the disk to completely spin down.

   WARNING:
   Neglecting to shut down an AUDIX assembly before powering down the system cabinet where it resides can damage the AUDIX disk.

2. See WARNING. To avoid an unexpected AUDIX reboot after an unplanned switch reboot, unseat the AUDIX assembly from its backplane connectors.

   WARNING:
   Before inserting or removing a circuit pack from a cabinet, put on a wrist strap and attach its plug or clip to the cabinet's frame.

Power Down System

See CAUTION. At the power-distribution unit, set the main circuit breaker to OFF.

CAUTION:
Powering down the control cabinet will cause important system data, such as BCMS data, records of queued ACD calls, Automatic Wakeup requests, and Do Not Disturb requests to be lost. Refer to DEFINITY Communications System Generic 1, Generic 3i, Generic 3i-Global, and Generic 3i V4 Maintenance, 555-204-105, Issue 7, for information about preparing the system for a power down. BCMS data cannot be stored to or retreived from tape.

Install Power-Failure Transfer Ground Strap

CAUTION:
To avoid contaminating single-point ground, do not connect the ground strap while the system is powered up.

1. Connect a strap's lead either to pin 49 of the connecting block or to pin 49 of the CAP (cable access panel) associated with the power-failure transfer panel.
2. Route the other lead to an approved ground source.
3. Connect the lead to the approved ground source.

Remove Door and Panels and Disconnect Cables

1. Remove the front door from the cabinet (if desired).
2. With the cable retainer in front of you and the part number visible (4B or 4C), locate the slot that is almost vertical. (This slot is adjacent to the part number.) Insert a flat-blade screwdriver with a wide blade (1/4-inch recommended) into the slot, and twist the screwdriver. The retainer will snap open easily so that the cable can be removed.
3. At the cabinet, disconnect previously labeled cables associated with the carrier to be removed.
4. Behind the cabinet, remove all of the back panels. (Two different types of screws hold the back panels to the cabinet. The #10 screws can be removed with a screwdriver or a 1/4-inch socket. The #12 screws can be removed with a screwdriver or a 5/16-inch socket.)

Remove Circuit Packs from Carrier A

1. To ensure that circuit packs and power units in the ''A'' carrier are properly replaced, label each component with its slot number.
2. Disconnect the power cords from the power units in the ''A'' carrier.
3. See WARNING. Remove all circuit packs and power units from carrier ''A.'' Store the circuit packs in the static-proof packaging.

   WARNING:
   Before inserting or removing a circuit pack from a cabinet, put on a wrist strap and attach its plug or clip to the cabinet's frame.

4. Remove the circuit-pack blanks from slots that do not contain circuit packs.
5. Remove the front trim plate from the ''A'' carrier by pulling straight off.

Remove Tape Drive

NOTE:
The tape drive does not have to be removed at this time. It can be disconnected now, and then removed at a later date when time is less critical.

1. Remove tape.
2. Disconnect the AHF4 cable adapter from behind slot ‘‘07’’ of control carrier ‘‘A’’ (see Figure 3-2).
3. Open the snap connectors to remove the adapter from the tape drive’s ribbon cable. Route the cable back to the tape drive and remove it. (There are two cable clamps on the cabinet’s side panel. Use a screwdriver to unsnap them.) Neither the cable nor the adapter will be used in the upgraded EPN cabinet.
   - On the HCMR tape drive, disconnect the power supply from the front of the unit. Then, remove the screws (at the rear of the unit) that attach the drive to the chassis, and slide the tape drive out the front of the cabinet.
   - On the RMSS tape drive, disconnect the red and black wire. Remove the faceplate. Then, remove the screws that hold the unit to the chassis. Slide the drive out the front of the cabinet.
4. Coil the red and black wire in a out-of-the-way position in the cabinet.
5. Install the 176A apparatus blank over the empty space left by the removal of the tape drive.

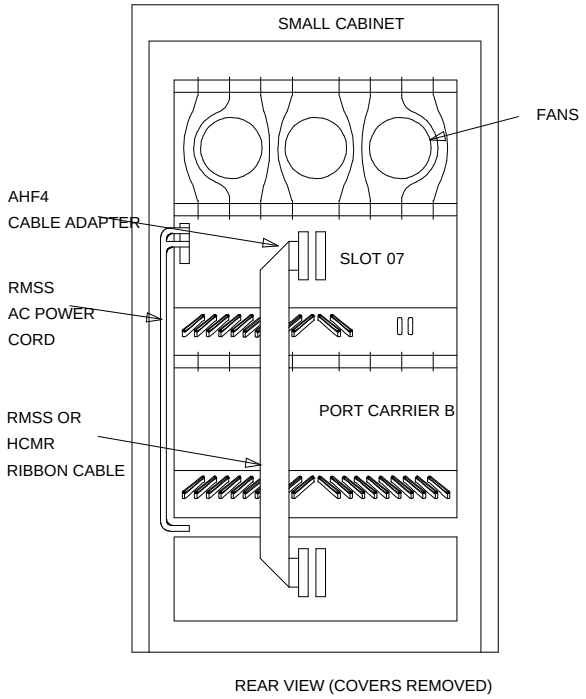

Figure 3-2. R1V3 System Cabinet

Remove Control Carrier A

1. See CAUTION and NOTE. Remove the TDM cable and AHF3 cable adapters from between the ‘‘A’’ and ‘‘B’’ carriers (see Figure 3-3). They will not be reused.

   CAUTION:
   When removing the cable adapters, be careful that none of the short pieces of shrink tubing come off the four corner pins of the pin-field block. Otherwise, when the new equipment is connected, -48 volts could short to ground.

   NOTE:
   Before disconnecting each cable adapter, note its position.

2. Disconnect one end of the eight ground straps (between the ‘‘A’’ and ‘‘B’’ carriers) from the ‘‘A’’ carrier (see Figure 3-4). These straps will be reconnected to the new ‘‘A’’ carrier.

3. Slide the latch up, and disconnect the ‘‘P1’’ (small 9-pin) connector and the ‘‘P2’’ (large 37-pin) connector from the ‘‘A’’ carrier (see Figure 3-5). Move the cables into a position where they will not interfere with removing the carrier.
4. Remove the fan trim plate by pulling straight off.
5. Clean or replace the air filter (403326820) if necessary.
6. In front of carrier, remove the four screws (top two first) holding the ‘‘A’’ carrier to the cabinet frame. Use a long-handle screwdriver or 5/16-inch socket with a 10-inch extension.
7. See CAUTION. Slide the carrier forward 1 to 2 inches; then, from the back, be sure that no cables or wiring harnesses are caught on the cabinet/carrier framework.

   CAUTION:
   Cables and wiring harnesses can be damaged if they catch on the framework and if too much pressure is applied in removing the carrier.

8. Remove the carrier by sliding it out the front of the cabinet.

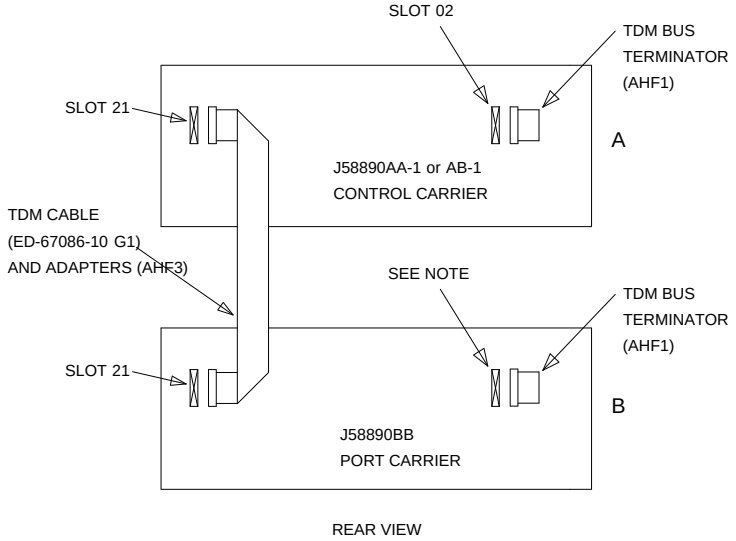

NOTE: ON PORT CARRIER J58890BB-1, DISCONNECT THE TDM TERMINATOR FROM SLOT 02.
ON PORT CARRIERS J58890BB-2 AND J58890BB-3, DISCONNECT THE TDM TERMINATOR FROM SLOT 01.
IF THE PORT CARRIER HAS BOTH J58890BB-1 AND J58890BB-2 STENCILLED ON IT, TREAT IT AS A J58890BB-1.

Figure 3-3. TDM Connections for Small R1V3 System

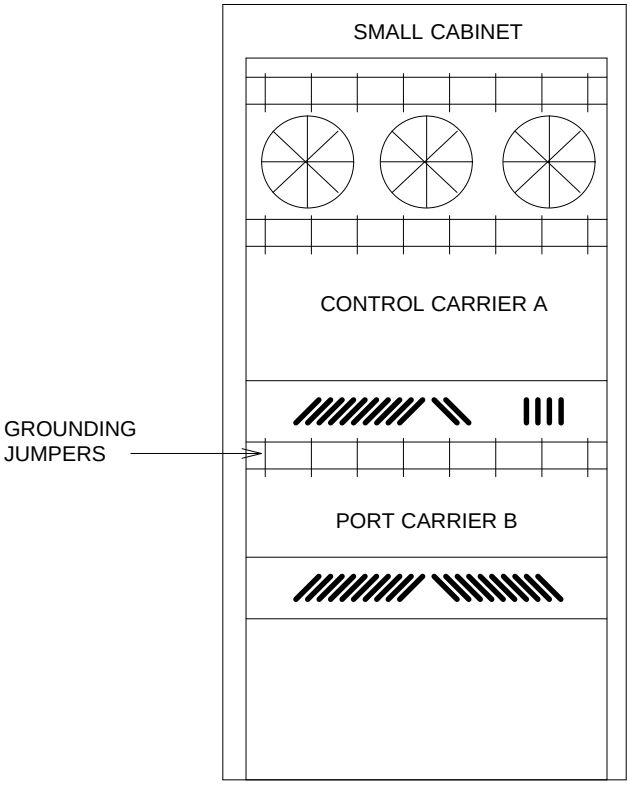

Figure 3-4. Locations of Grounding Jumpers

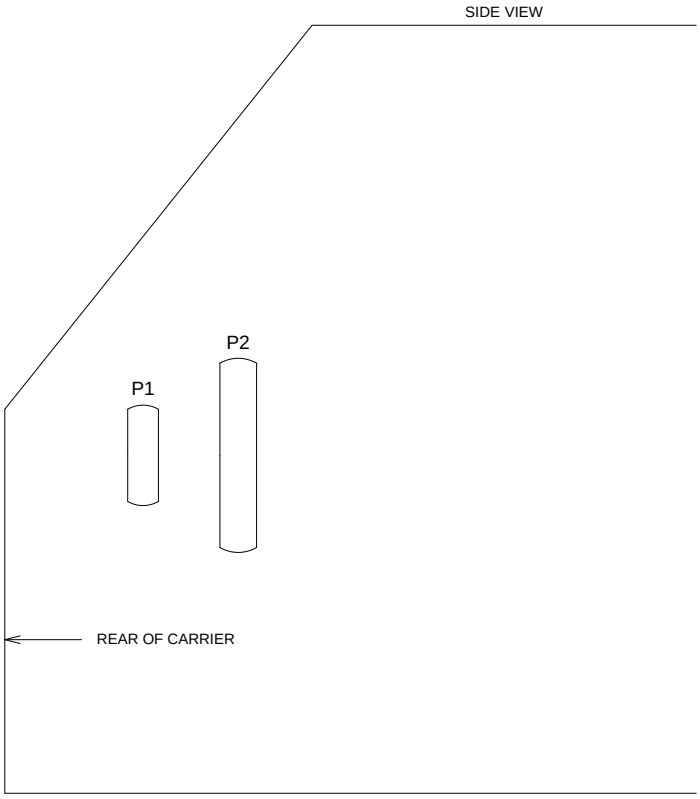

Figure 3-5. Location of P1 and P2 Connectors

Prepare New Expansion Control Carrier A

1. Visually inspect the new carrier for any damage. Verify that the backplane pins are not bent.
2. Place the expansion control carrier on the floor so that the rear of the carrier faces up.
3. Install the CFY1 current limiter (CURL) on the ‘‘A’’ carrier to the pin-field block marked “CURL.’’ The CURL is inserted with the components on the left side as viewed from the rear.
4. At the rear connector panel, determine which connectors will have a cable attached, and install a 4B cable retainer on each of these connectors.

Install New Expansion Control Carrier A

1. Install the J58890AF expansion control carrier in position ‘‘A’’ by lining up the carrier with the screw holes in the cabinet. Ensure that the power cords are properly placed in the slots at the sides of the carrier.
2. See CAUTION. Fasten the carrier into position with four self-tapping screws saved from the removal of the old carrier.

   CAUTION:
   Carefully realign the threads on the self-tapping screws by turning them clockwise a turn or two before tightening them to avoid stripping the threads out of the framework.

3. Connect the ‘‘P2’’ and ‘‘P1’’ (large and small) connectors to the ‘‘A’’ carrier (see Figure 3-6). If necessary, to get enough slack in the cables, cut the tie wrap holding the intercabinet cable to the upright in the area of the carrier being installed. Snap the connector lock into place to ensure that the connection is properly made.
4. Connect the eight ground straps from the ‘‘B’’ carrier to the new ‘‘A’’ carrier (see Figure 3-4). These straps were left connected to the ‘‘B’’ carrier when the old ‘‘A’’ carrier was removed.
5. See NOTE. For an AC-powered expansion control carrier, install the two new carrier-ground straps. One strap connects ground point ‘‘1’’ to the A-carrier frame (on the right side), and the other connects ground point ‘‘8’’ to the A-carrier frame (on the left side).

   NOTE:
   DC-powered carriers do not use these carrier-ground straps.

6. Connect the TDM/LAN bus between the ‘‘A’’ and ‘‘B’’ carriers using the new WP-91716 L6 TDM/LAN cable. The cable is connected to the pin-field block marked ‘‘TDM’’ on the left side of both carriers. (See Figure 3-7 and Table 3-3.)

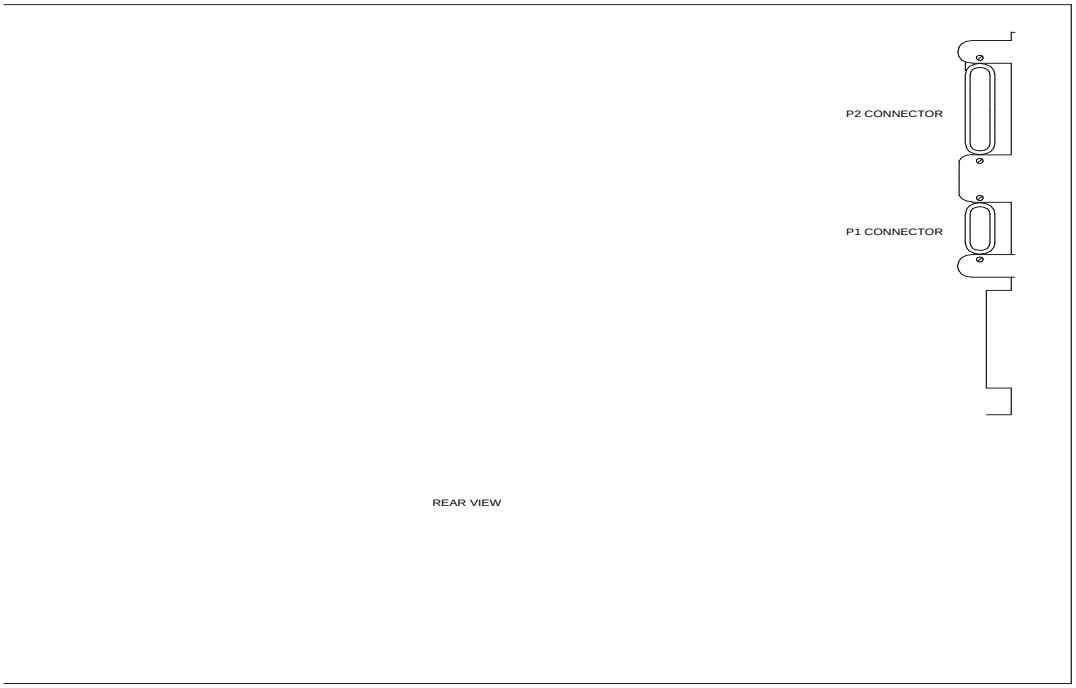

Figure 3-6. Location of P1 and P2 Connectors on DEFINITY Carrier

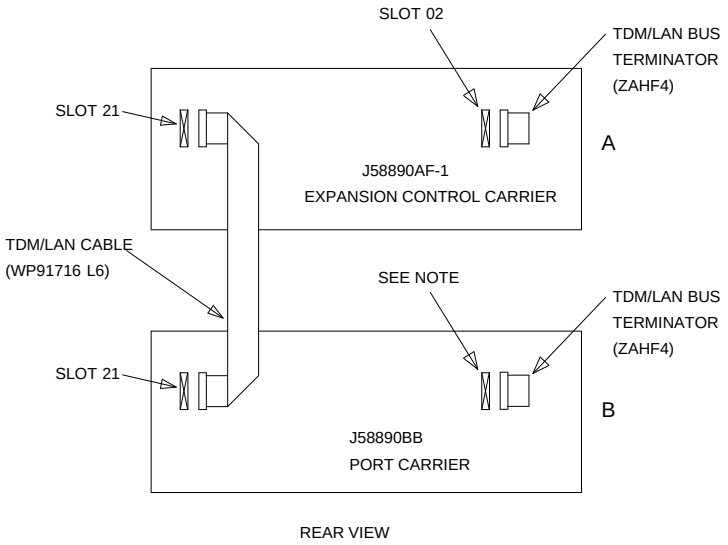

NOTE: ON PORT CARRIER J58890BB-1, CONNECT THE TDM/LAN TERMINATOR TO SLOT 02.
ON PORT CARRIERS J58890BB-2 AND J58890BB-3, CONNECT THE TDM/LAN TERMINATOR TO SLOT 01.
IF THE PORT CARRIER HAS BOTH J58890BB-1 AND J58890BB-2 STENCILLED ON IT, TREAT IT
AS A J58890BB-1.

Figure 3-7. TDM/LAN Connections for G3r V4 EPN

Table 3-3. TDM/LAN Connections

"J" Number	Carrier Type	LHS Slot	RHS Slot
J58890BB-1	Port	21	02
J58890BB-2	Port	21	01
J58890BB-3	Port	21	01
J58890AF	EPN Control "A"	21	02

7. See CAUTION. At the pin-field blocks marked ‘‘TDM,’’ replace the existing TDM bus terminators on carriers ‘‘A’’ and ‘‘B’’ with the new ZAHF4 TDM/LAN bus terminators. (See Figure 3-3 and Figure 3-7 and Table 3-3.)

   CAUTION:
   When removing the terminators, be careful that none of the short pieces of shrink tubing come off the four corner pins of the pin-field block. Otherwise, when the new equipment is connected, -48 volts could short to ground.

8. Install the front trim plates on the ‘‘A’’ carrier. Install the fan trim plate.
9. Peel the old decal strip (designation strip) from the trim plates. Then, install the new decal strip at the bottom of the trim panel.
10. Install the new connector-panel decal on the rear connector panel.
11. Install the 631-type power units (removed from R1V3) into both the ‘‘A’’ and ‘‘B’’ carriers. Three different pairs of AC power units have been developed. They are the 631AR1 and 631BR1, the 631WA1 and 631WB1, and the 631DA1 and 631DB1. Since power units from the newer pairs are downward compatible with the older ones, power units from different pairs can reside in the same carrier.

    However, do not interchange the physical locations of the units. The 631AR1, 631WA1, or 631DA1 are installed in the left side, while the 631BR1, 631WB1, or 631DB1 are installed in the right side (see Figure 3-8).
12. If the expansion control carrier contains a 631BR1 or 631WB1 power unit, install the previously removed TN736 power unit in port slots ‘‘18’’ and ‘‘19’’ of the carrier (adjacent to the 631BR1 or 631WB1). If the system is equipped for neon message waiting, a TN752 or TN755 power unit must be used.

    NOTE:
    A TN736 is not required when a 631DB1 power unit is used in a J58890AF-1 expansion control carrier or in a J58890BB-2 or -3 port carrier. It is always required in the J58890BB-1 port carrier, regardless of which 631 power unit is provided. Use a TN752 or TN755 if the system is equipped with neon message waiting.

13. Connect the power cords to the power units. The power cords are the white cables equipped with plugs that are run through the slots in the front of each carrier (see Figure 3-9).

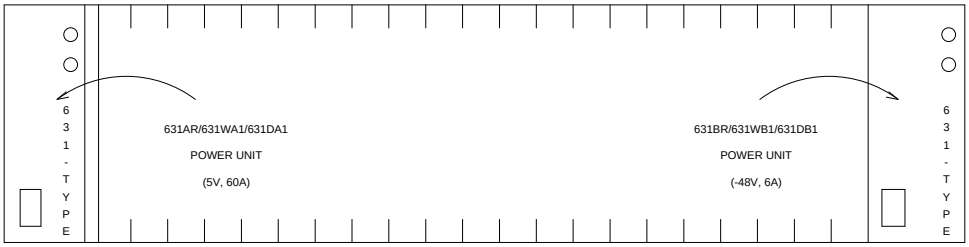

Figure 3-8. Locations of Power Units

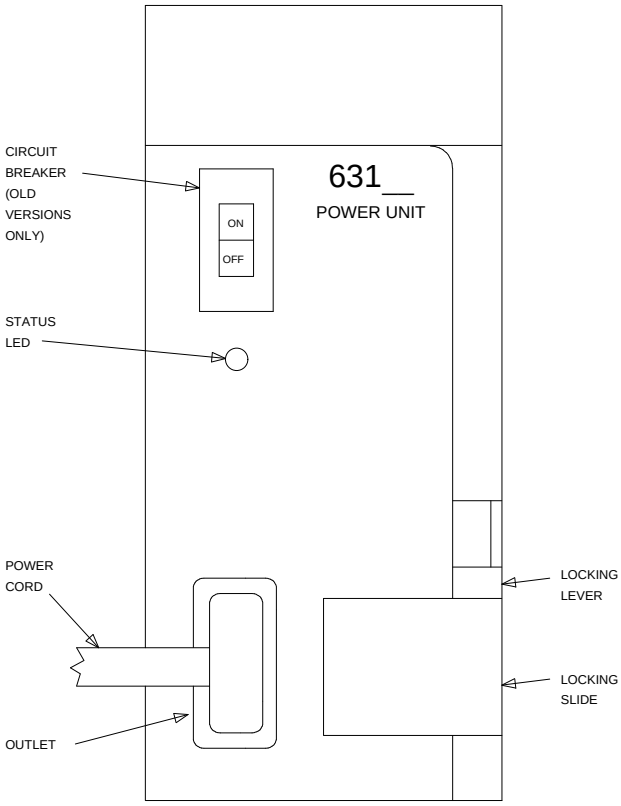

Figure 3-9. 631-Type Power Unit

Install Circuit Packs

1. See WARNING. Install the new G3r V4 control circuit packs into expansion control carrier ‘‘A.’’ Use the following figure, the new decal, and the annotated ‘‘list configuration all’’ (provided with the G3r V4 tape) as a guide.

   WARNING:
   Before inserting or removing a circuit pack from a cabinet, put on a wrist strap and attach its plug or clip to the cabinet’s frame.

2. See preceding WARNING and following WARNING and NOTE. Install the previously removed port circuit packs into the ‘‘A’’ carrier using the decal and the annotated ‘‘list configuration all’’ (provided with the G3r V4 tape) as a guide.

   WARNING:
   These installed port circuit packs must conform to the usable vintage requirements for a G3r V4 system (see Reference Guide for Circuit-Pack Vintages and Change Notices).

   NOTE:
   Since the new G3r V4 expansion control carrier has seven to eleven more port slots than the removed control carrier, there should not be a need to move and retranslate these circuit packs.

   If a port circuit pack was located in slot ‘‘01’’ of control carrier ‘‘A,’’ the STS software upgrade retranslated this circuit pack to occupy an empty port slot in the new expansion control carrier.

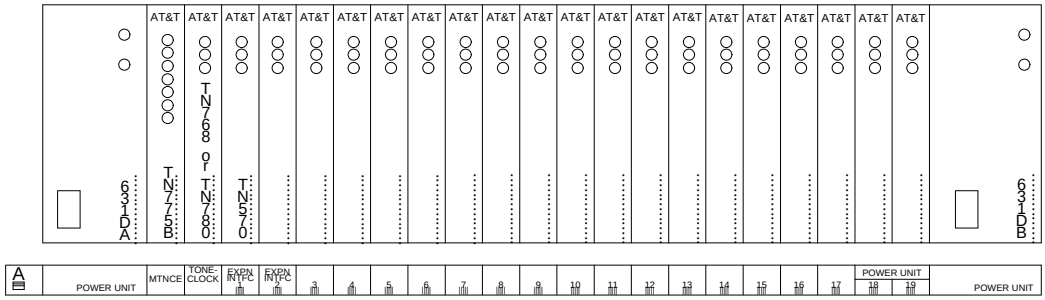

Figure 3-10. Circuit-Pack Locations in G3r V4 Expansion Control Carrier

3. Install circuit-pack blanks in slots not equipped with circuit packs.
4. Ensure that the PPN associated with this EPN is equipped with a TN570.

Interconnect Port Networks

See NOTES. Fiber-optic cabling terminated to 9823A lightwave transceivers can interconnect port networks (PNs) located up to 4,900 feet (about 9/10 mile) apart. Whereas, fiber-optic cabling terminated to 9823B lightwave transceivers can interconnect port networks located up to 25,000 feet (about 4.7 miles) apart. When available and whenever the desired distance between the port networks is less than 25,000 feet, fiber is the preferred medium for interconnecting port networks, providing significantly higher-bandwidth connectivity than DS1C remoting.

NOTE:
As always, these distance limitations are approximate measurements of the *actual* fiber right-of-way (not of the shortest linear distance) between the two endpoints.

NOTE:
It is important to label every cable that you install. For details, refer to the section, *Labels for Fiber-Optic Cables*, in Appendix E of the installation manual.

NOTE:
Throughout these procedures, remember to keep track of which fiber is attached to which connector on each lightwave transceiver. This section provides figures offering the suggested way of making these connections.

The connectors on the lightwave transceivers are labeled either “TX” (transmit) or “RX” (receive), while the fibers attached to each connector are numbered either ‘‘1’’ or ‘‘2.’’ A viable fiber connection is only made when both fibers in each cable (that is, ‘‘1’’ and ‘‘2’’) route from the “TX” connector of a port network to the “RX’’ connector of its adjacent port network. For an example, refer to Figure 3-12.

NOTE:
For implementation details, refer to the ‘‘Fiber Link Administration’’ sections of *DEFINITY Communications System Generic 3 V4 Implementation*, 555-230-653.

Collocated Port Networks

When a standard-reliability PPN and EPN are collocated, one fiber-optic cable (FL2P-P-XX) and two lightwave transceivers (9823-type) are required for EPN connections.

NOTE:
For the FL2P-P-XX fiber-optic cable, the -XX suffix represents the length of the cable in feet. Based on floor-plan considerations, the length of these cables may vary. However, 20-foot cables are normally adequate for a G3r V4 with two port networks.

For collocated cabinets, the fiber-optic cable should be routed directly from the PPN to the EPN cabinet. Since, for this upgrade, a ''DEFINITY style'' PPN cabinet is next to a small EPN cabinet, the preferred routing is to run the cable down the cable tray and out the bottom of the PPN cabinet. The cable is then run to the EPN cabinet and up the outside of the rear panels to the desired carrier level.

Fiber-Remoted Port Networks

When a standard-reliability PPN and EPN are remotely separated with fiber, two fiber-optic cables (FL2P-P-XX), two lightwave transceivers (9823-type), and two lightwave-interface units (provided by the PSC) are required.

For remote cabinets, the cables should be routed down the cable tray and out the bottom of the cabinet to the cross-connect field where the lightwave-interface units are located.

DS1C-Remoted Port Networks

When a standard-reliability PPN and EPN are remotely separated with DS1 facilities, two DS1C circuit packs (TN574), two DS1C-to-EI cables (846448637 and/or 846448645), two H-600-348 cables, from one to four pairs of channel service units (CSUs), and from one to four pairs of wall-field cables (provided with the CSUs) are required.

In any case, use cable ties to secure the cables against the walls of the cable tray at the cable-tie positions built into the trays.

One Collocated Expansion Port Network

1. Behind port carrier B of the PPN cabinet (see Figure 3-11 and Figure 3-12):
   - Install a 9823-type lightwave transceiver on the cable connector at slot 1B02.
   - Connect one end of the fiber-optic cable to the 9823-type lightwave transceiver, just installed, at slot 1B02.
   - Route the fiber-optic cable from the 9823-type lightwave transceiver to the cabinet's cable tray and downward out of the cabinet to the EPN.
   - Delicately attach the fiber-optic cable (with cable ties) to the wall of the cable tray at the built-in cable-tie positions.
2. Behind control carrier A of the EPN cabinet:
   - Install the same kind (either 9823-A or 9823-B) of lightwave transceiver on cable connector at slot 2A01.
   - Connect the other end of fiber-optic cable to the 9823-type lightwave transceiver, just installed at slot 2A01.
   - Delicately attach the fiber-optic cable (with cable ties) to the rear panels of the EPN cabinet.
   - Coil up the surplus length of fiber-optic cable, and place the coil either in the cable manager or on the bottom shelf (holding the power supply) of the PPN cabinet.

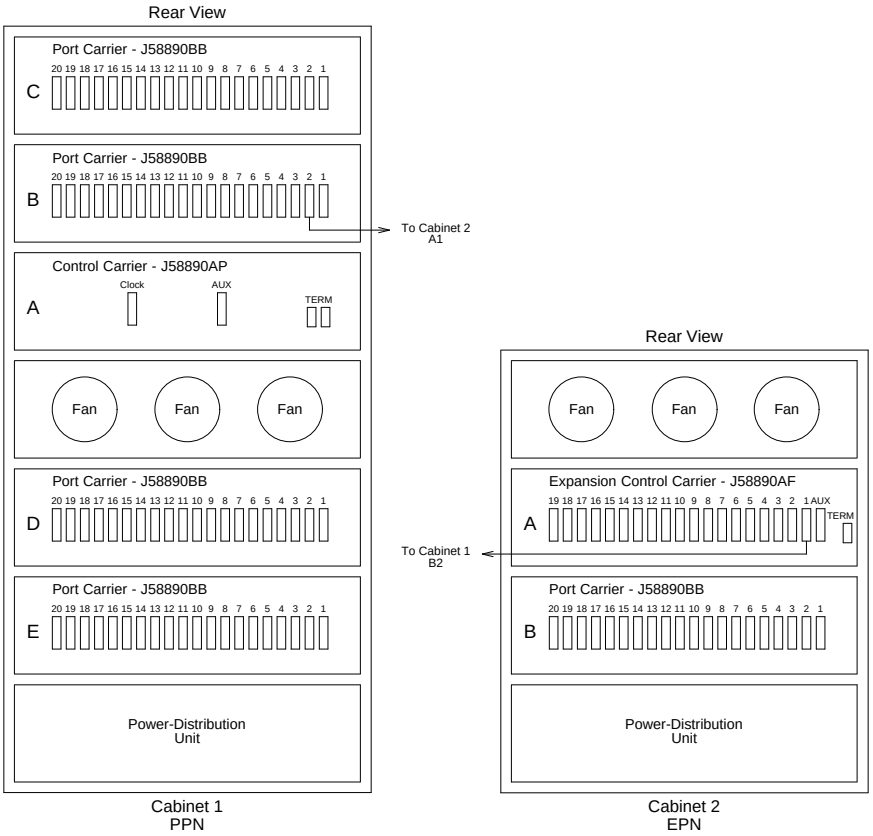

Figure 3-11. Standard-Reliability G3r V4 with Two Port Networks

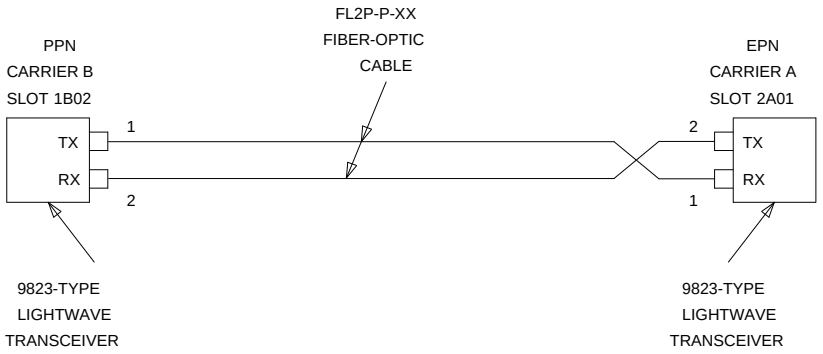

Figure 3-12. Fiber-Optic Connections — Collocated Cabinets

One Fiber-Remoted Expansion Port Network

1. Behind port carrier B of the PPN cabinet (see Figure 3-11 and Figure 3-13):
   - Install a 9823-type lightwave transceiver on the connector at slot 1B02.
   - Connect one end of the fiber-optic cable to the 9823-type lightwave transceiver at slot 1B02.
   - Route the fiber-optic cable from the 9823-type lightwave transceiver to the cabinet cable tray and downward out of the cabinet through the cable manager to the PDS cross-connect facility.
   - At the PDS cross-connect facility, connect the fiber-optic cable to the lightwave-interface unit provided.
   - Delicately attach the fiber-optic cable (with cable ties) to the wall of the cable tray at the built-in cable-tie positions.
2. Behind control carrier A of the EPN cabinet:
   - Install the same kind (either 9823-A or 9823-B) of lightwave transceiver on cable connector at slot 2A01.
   - Connect the fiber-optic cable to the 9823-type lightwave transceiver at slot 2A01.
   - Route the fiber-optic cable from the 9823-type lightwave transceiver to the cabinet cable tray and downward out of the cabinet through the cable manager to the PDS cross-connect facility.

- At the PDS cross-connect facility, connect the fiber-optic cable to the lightwave-interface unit provided.
- Delicately attach the fiber-optic cable (with cable ties) to the rear panels of the EPN cabinet.
- Coil up the surplus length of fiber-optic cable, and place the coil either in the cable manager or on the bottom shelf (holding the power supply) of the PPN cabinet.

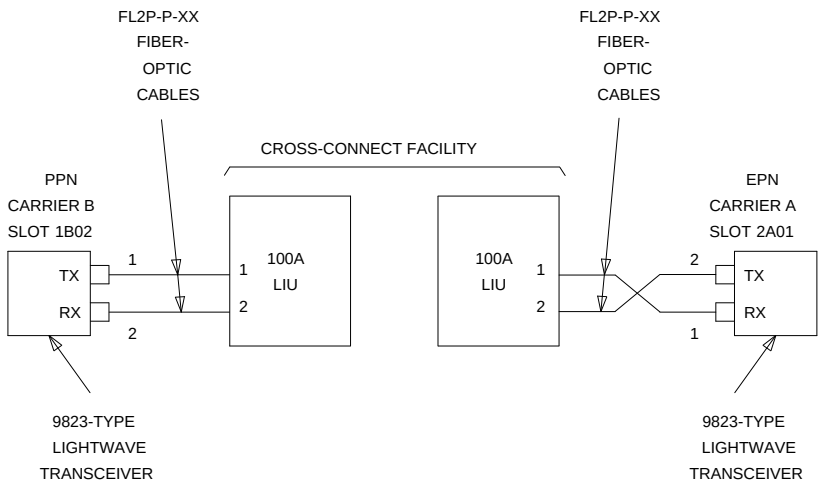

Figure 3-13. Fiber-Optic Connection — Remote Cabinets

DS1C-Remoted Cabinets

See NOTES. Digital Services 1 (DS1) facilities and associated equipment-room hardware and cabling can interconnect two port networks (PNs) located up to 100 miles apart. Although DS1 remoting always serves as a lower-bandwidth alternative to fiber remoting, DS1 remoting is especially attractive when:

- Fiber-optic cabling is unavailable to the remote site
- When the desired distance between the port networks exceeds the practical fiber limit of 25,000 feet (about 4.7 miles)
- Digital Services facilities, with enough bandwidth for interconnection, already exist between the two port networks

NOTE:
As always, these distance limitations are approximate measurements of the *actual* fiber or copper right-of-way (not of the shortest linear distance) between the two endpoints.

NOTE:
The 100-mile limit for DS1 remoting is the maximum distance between *any* two port networks in a G3r V4 system with either direct or switched port-network connections.

For example, in a *directly connected* system, a single EPN can be remoted up to 100 miles. This is because the length of the *direct* fiber connection from any port network in the local equipment room to the remote EPN is 100 miles.

However, if more than one EPN is remoted in a directly connected system, the 100-mile limit applies to any two port networks. Assuming straight cable runs, suppose that a customer wants to remote one EPN 80 miles due east and another EPN due north of the local PPN. This arrangement can only be accommodated if the second EPN resides no more than 60 miles north of the PPN. This is because the direct fiber distance between the two EPNs is also limited to 100 miles.

As another example, in *switch-connected* system with numerous port networks, one EPN might be remoted 75 miles from the switch node. If this were the case, then the maximum distance that any other EPN could be remoted would be 25 miles.

Digital public-network tie-trunk facilities provide the end-to end connectivity between the port networks. For either type of port network (PPN or EPN), a TN574 DS1 Converter (DS1C) circuit pack serves as the port-network interface to the DS1 facilities. As a PPN interface, a TN574 DS1C can reside in either:

- A port carrier (in any port slot)
- A switch-node carrier (in port slot ‘‘1’’ or ‘‘21’’)

As an EPN interface, a TN574 DS1C can reside in an expansion control carrier (in any port slot).

DS1 Cabling within the Local Port Networks. See NOTE. Use the running list that accompanies the upgrade equipment to determine which cable should be connected where. The following paragraphs only provide conceptual information about wiring a DS1C interface either to an expansion interface or to a switch-node interface, not step-by-step procedures for wiring a specific G3r V4 system.

NOTE:
It is important to label every cable installed. For details, refer to the section, *Labels for Fiber-Optic Cables*, in Appendix E of the installation manual.

See NOTE. As shown in Figure 3-14, a cable connects each DS1C either to the appropriate TN570 expansion interface (for a direct connection to another port network) or to the appropriate TN573 SN Interface (for a switched connection to another port network).

NOTE:
For the purposes of an R1V3 to G3r V4 upgrade, this cable will usually connect to a TN570 expansion interface (already installed) for a direct connection between the new PPN and the upgraded EPN.

On the DS1C side, a 4C retainer binds this shielded cable to the DS1C port connector. On the EI/SNI side, a 4B retainer binds the cable to the EI/SNI port connector. The DS1C-to-EI/SNI cable also provides a piggy-back connector enabling subsequent access to the public network. Table 3-4 lists the cable numbers and lengths for the possible connections.

Table 3-4. Numbers and Lengths of DS1C-to-EI/SNI Cables

Connection Type	Comcode Number	Length
Within same carrier	846448637	1 foot
Between two carriers in same port network	846448645	5.5 feet
Between two carriers in adjacent networks	846448652, and one 846885259 bracket	1 foot (used with two 9823As, & one 20-foot fiber-optic cable)

DS1 Cabling to the Public Network. See NOTE. Use the running list that accompanies the upgrade equipment to determine which cable should be connected where. The following paragraphs only provide conceptual information about wiring a DS1C interface to a wall-field block, not step-by-step procedures for wiring a specific G3r V4 system.

NOTE:
It is important to label every cable that you install. For details, refer to the section, *Labels for Fiber-Optic Cables*, in Appendix E of the installation manual.

Figure 3-14 also shows the cabling between various port networks and the cross-connect field where the public network is accessed. If already connected to either an expansion or switch-node interface, a DS1C circuit pack already resides either in an EPN expansion control carrier or in a PPN port carrier or switch-node carrier.

Depending on the traffic requirements between the two port networks, a 25-foot H600-348 cable extends from the piggy-back connector (on each DS1C-to-EI/SNI cable) to from one to four channel service units (CSUs). [This cable branches to four 15-pin subminiature D-type connectors (labeled ‘‘01’’ to ‘‘04’’) to make the CSU connections.] Then, in turn, the CSU(s) are connected to the wall-field block (corresponding to the equipment location of the DS1C) at port connections ‘‘8,’’ ‘‘7,’’ ‘‘6,’’ and ‘‘5’’ (in descending order).

Neglecting overhead, this wiring arrangement can provide PN-to-PN communication at the bandwidth of up to four DS1 spans (1.544 Mbps each). Between each port network’s wall field, the port networks communicate across leased lines in the public network.

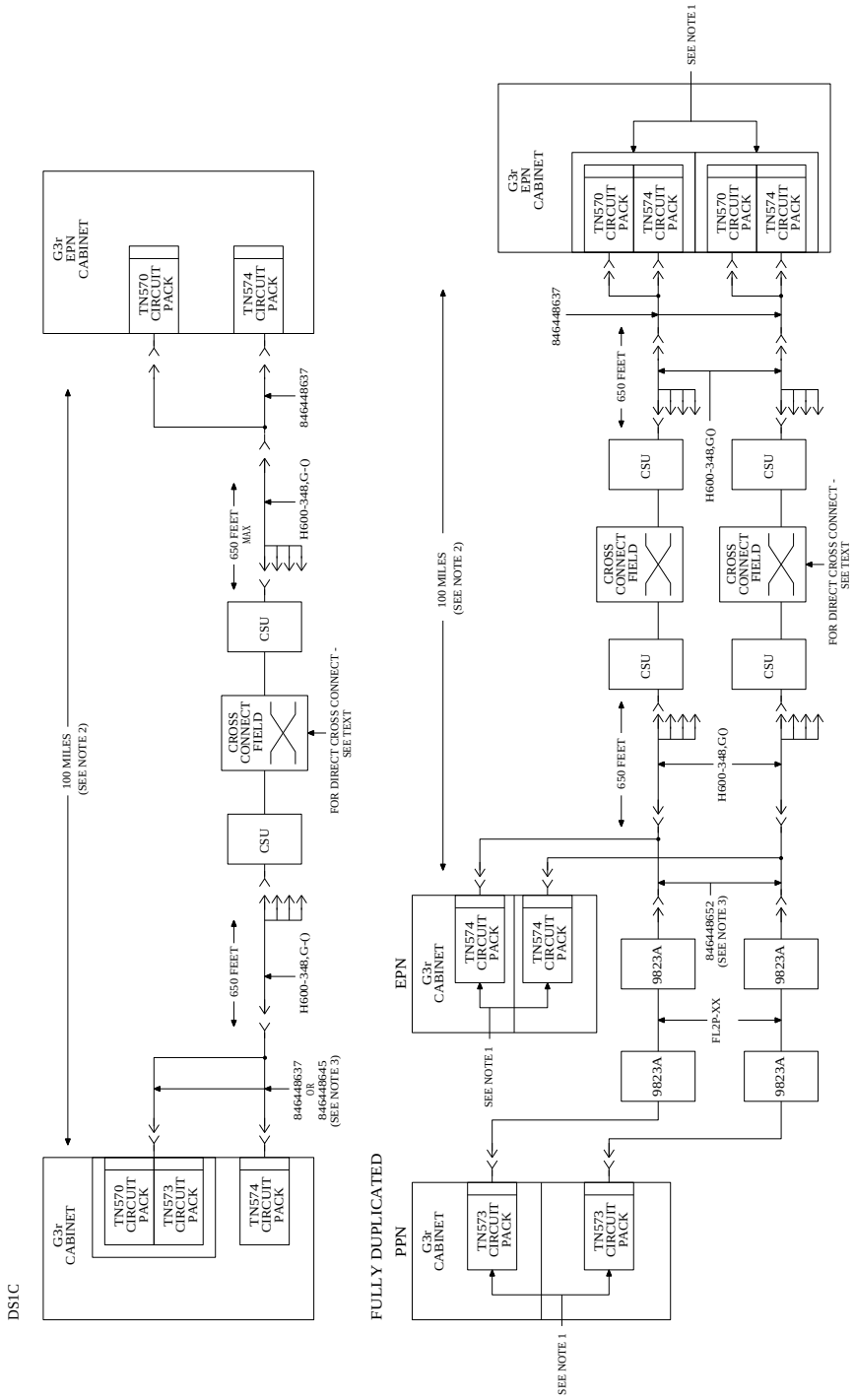

Figure 3-14. DS1 Connectivity between Remote PNs

Verify Usable Circuit-Pack Vintages

Verify that every R1V3 circuit pack reused in the upgrade conforms to the usable vintage requirements for a G3r V4 system (see Reference Guide for Circuit-Pack Vintages and Change Notices).

Install System Access Ports

As a prerequisite for connecting various endpoints that use EIA interfaces to the G3r V4 system, install the up to eight loop-around connections for Mode 2-to-Mode 3 (and vice versa) data conversion.

From the *outgoing* perspective of the system communicating with an EIA endpoint, these loop-around connections convert Mode 3 data (circuit-switched packet data, with undefined bit rates and packet specifications) to Mode 2 data (low-speed, usually asynchronous, data at rates of 300 to 19,200 bps) by:

- Accepting Mode 3 data off the LAN bus (from the SPE) at a TN553 Packet Data Line circuit pack, where Mode 3-to-Mode 2 conversion is done
- Routing the converted data through the cross-connect field and back to a TN726B Data Line where the equivalent Mode 2 data can access the TDM bus, for subsequent routing to an EIA endpoint

The endpoints that use these EIA interfaces and, therefore, require the Mode 2-to-Mode 3 conversion include:

- DEFINITY Communications System Generic 3 Management Applications (G3-MA)
- Remote DEFINITY Communications System Generic 3 Management Terminal (G3-MT)
- Basic Call Management System (BCMS) terminal
- Call Detail Recording Unit (CDRU)/Centralized Attendant Service Plus (CAS+)
- Property Management System (PMS)
- Printers

The following figures show this loop-around configuration and how the B25A cables are cross-connected.

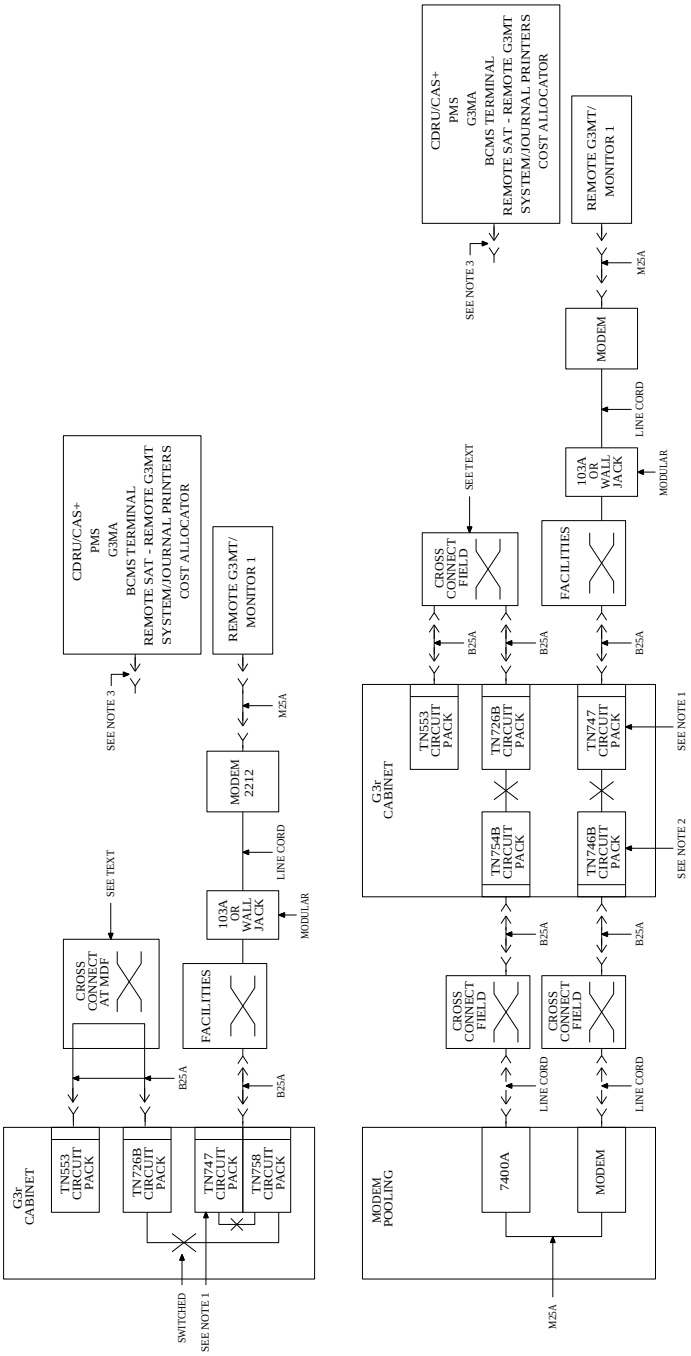

Figure 3-15. Connections: CDRU/CAS+, PMS, BCMS, Printers, G3-MA/MT

Pinouts for the TN553 and TN726B circuit packs shown cross-connected in the preceding figure are given in the table below.

Pinouts

TN553 (12 Ports)

1	26	
2	27	1
3	28	
4	29	2
5	30	
6	31	3
7	32	
8	33	4
9	34	
10	35	5
11	36	
12	37	6
13	38	
14	39	7
15	40	
16	41	8
17	42	
18	43	9
19	44	
20	45	10
21	46	
22	47	11
23	48	
24	49	12
25	50	G

TN726B (8 Ports)

1	26	Blank
2	27	
3	28	1
4	29	Blank
5	30	
6	31	2
7	32	Blank
8	33	
9	34	3
10	35	Blank
11	36	
12	37	4
13	38	Blank
14	39	
15	40	5
16	41	Blank
17	42	
18	43	6
19	44	Blank
20	45	
21	46	7
22	47	Blank
23	48	
24	49	8
25	50	Blank

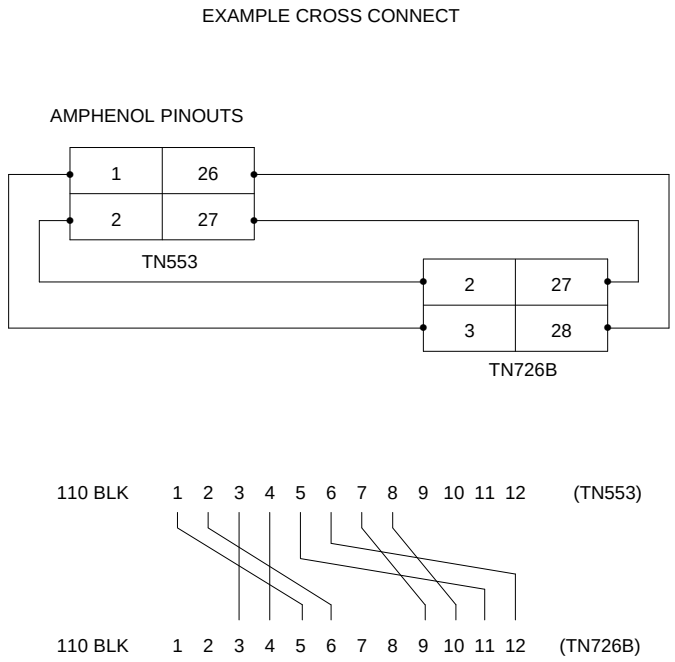

Figure 3-16. Example of Cross Connect between TN553 and TN726B

Reseat DEFINITY AUDIX System

See WARNING. If a DEFINITY AUDIX System resides in the system, reseat the AUDIX assembly to its backplane connectors.

WARNING:
Before inserting or removing a circuit pack from a cabinet, put on a wrist strap and attach its plug or clip to the cabinet's frame.

Remove Power-Failure Ground Strap

Remove the ground strap from the power-failure transfer unit.

Reboot the System

1. Connect the G3-MT to the connector labeled ''TERMINAL'' behind PPN control carrier ''A,'' or install the G3-MA according to the ''Set Up G3-MA'' chapter of *DEFINITY Communications System Generic 3 Management Applications — Operations*, 585-229-202.
2. Verify that the new G3r V4 system tape is inserted in the PPN cabinet.
3. At the EPN power-distribution unit, set the main circuit breaker to ON.
4. At the PPN power-distribution unit, set the main circuit breaker to ON.
5. The system now goes through the reset level 4 rebooting process, loading blank translations from the *disk* (not the new tape). Rebooting requires 5 to 11 minutes.
6. Enter **`reset system 4 tape`**. Press (RETURN). This command instructs the system to go through the reset level 4 rebooting process, loading the upgraded STS translations from the new *tape*. Rebooting requires 5 to 11 minutes.

   Refer to ''Initialization and Recovery'' and ''LED Interpretation'' chapters in *DEFINITY Communications System Generic 3r V4 Maintenance*, 555-230-105, Issue 3, for circuit-pack LED indications and screen displays that occur during system reboot.
7. Log in at the `login:` prompt on the G3-MT or G3-MA, and set the time to ensure that the system is booted properly.
8. Enter **`restore disk spe-a full`**. Press (RETURN). This command instructs the system to write the upgraded STS translation information from memory to the disk.
9. Enter **`reset system 4`**. Press (RETURN). This command instructs the system to go through the reset level 4 rebooting process, loading the upgraded STS translations from the *disk*. Rebooting requires 5 to 11 minutes.

   NOTE:
   Certain forms have changed for G3r V4. Upgraded R1V3 translations may appear on a different form, fields may have shifted within a form, and/or the names assigned to particular fields may have changed. Refer to Table 3-1 and to *DEFINITY Communications System Generic 3r Transition Reference*, 555-230-636, and *DEFINITY Communications System Generic 3 V4 Implementation*, 555-230-655, and make the necessary changes.

Relabel Wall Field

If not done during the installation of new PPN, relabel the wall field with the new port-network number of the upgraded G3r V4 EPN. (For an upgrade of an R1V3 system, the STS software upgrade assigned port-network number ''2'' to the upgraded EPN.)

Close EPN Cabinet and Reconnect Cables

1. At the EPN power-distribution unit, set the main circuit breaker to OFF.

   NOTE:
   Powering down the EPN without powering down the PPN will set off alarms. However, these alarms should clear after power is restored to the EPN.

2. Temporarily disconnect the lightwave transceivers and fiber-optic cables, already labeled, from the appropriate carriers.
3. Replace the back panels previously removed.
4. At the EPN cabinet, reconnect the lightwave transceivers, fiber-optic cables, and the connector cables associated with the carrier being replaced.
5. Install the front door on the EPN cabinet if previously removed.
6. Install a DEFINITY label on the EPN cabinet.

Power Up the EPN Cabinet

1. At the EPN power-distribution unit, set the main circuit breaker to ON.

   After about 40 seconds, EPN power and PPN/EPN communications return.

2. After power returns to the EPN and all trouble is cleared, verify that the EMERGENCY TRANSFER CONTROL switch is set to AUTO. This restores the system to the normal mode.

Retranslate Port Circuits

If port circuit packs in the R1V3 control carrier were relocated in order to put:

- A critical port circuit pack, requiring longer nominal battery holdover (e.g., a DS1 or an Announcement circuit pack), in a port slot
- A TN736, TN752, or TN755 power supply in port slots ‘‘18’’ and ‘‘19’’
- A TN570 Expansion Interface in port slot ‘‘1’’
- A TN570 Expansion Interface in port slot ‘‘2’’ (for a simultaneous EPN addition)

of the new expansion control carrier, verify that they were retranslated during the off-site software upgrade. If not, they must be retranslated now. Refer to *DEFINITY Communications System Generic 3 V4 Implementation*, 555-230-655, for instructions on performing the retranslations.

Rerecord Announcements

The off-site STS translation upgrade did not preserve the contents of recorded announcements. Therefore, if a TN750/B Announcement circuit pack resides in the system, any announcements that were stored on the circuit pack must be rerecorded.

Run Acceptance Tests

Refer to Chapter 11 of *DEFINITY Communications System Generic 1 and Generic 3 Installation and Test*, 555-230-104, Issue 5, and perform the appropriate tests.

Register System as G3r V4

Get the serial number of the new G3r V4 PPN, and call the INADS Database Administrator at the Technical Service Center (1-800-248-1111) to register the upgraded system as a G3r V4.

Return Replaced System 75 Equipment

The System 75 equipment replaced, during the upgrade to G3r V4, should be returned to AT&T according to the requirements outlined in:

BCS/Material Logistics, MSL/Attended Stocking Locations

Methods and Procedures for Basic Material Returns

The replaced System 75 equipment includes:

- System 75 control carrier and control circuit packs
- System 75 tone-clock circuit pack
- RMSS or HCMR tape drive
- R1V3 tape cartridges
- TDM cables (ED-67086-10 G1) and cable adapters (AHF3)
- TDM bus terminators (AHF1)

R1V3 Small to G3r V4 EPN with High Reliability

See NOTE. Refer to *DEFINITY Communications System Generic 1 and Generic 3 Installation and Test*, 555-230-104, Issue 5, to install the new PPN cabinet.

NOTE:
During the wall-field wiring of the PPN installation, the wall field can also be relabeled with the new port-network number of the R1V3 system to be upgraded. (For an R1V3 system, the STS software upgrade assigned the upgraded EPN as port network ‘‘2.’’)

If a second EPN is being added, refer to *DEFINITY Communications System Generic 1 and Generic 3 Installation and Test*, 555-230-104, Issue 5, to install the new EPN.

Cabinet Upgrade

A small R1V3 System 75 is upgraded to a high-reliability G3r V4 EPN by:

- Removing the tape-drive unit
- Removing the control carrier in position ‘‘A’’
- Installing the J58890AF-1 expansion control carrier in position ‘‘A’’
- Adding the G3r V4 circuit packs to the EPN
- Restructuring the port circuits as required

Prerequisite Hardware

The equipment in Table 3-5 *must* be on-site before the upgrade begins. Ensure that the tapes are G3r V4 tapes.

To place a claim for missing equipment, as part of the Streamlined Implementation process, call "1-800-772-5409," and respond to the call prompter.

Table 3-5. Required Hardware

Equipment	Description	Quantity
PEC 6300-07X	Processor Port Network	1
J58890AF-1	Expansion Control Carrier	1
106647985	TN775B Maintenance	1
103557211 or 103557336 or 106706955	TN768 Tone-Clock TN780 Tone-Clock TN2182 Tone-Clock	1 1 (Note 5) 1 (Note 6)
103281788	TN570 Expansion Interface	2 (Note 1)
J58890TF	Tape Cartridge	2
105691158	CFY1 Current Limiter	1
63300A	FL2P-P-XX Fiber Cable	1 (Note 2)
106455348 or 106455363	9823-A Lightwave Transceiver 9823-B Lightwave Transceiver	2 (Note 3) 2 (Note 3)
J58890A L20	WP-91716 L6 TDM/LAN Cable	1 (Note 4)
103960456	ZAHF4 TDM/LAN Bus Terminator	2
105731202	176A Apparatus Blank (for removed tape drive)	1
846309466	DEFINITY Label	1

Notes:

1. Two are required for a high-reliability switch with two port networks. One TN570 is shipped loose with the EPN equipment. The factory has installed the other TN570 in the new PPN.
2. Two are required if PPN and EPN are remotely located.
3. Two are shipped with the EPN equipment. One is used in the PPN.
4. Comes attached to the J58890AF-1 carrier.

5. Use TN780 as Tone-Clock for Stratum 3 timing. Also required with the TN780 are the TN748, and TN744 for tone-detection.
6. The TN2182 Tone-Clock provides tone detection, tone generation, and tone-clock in one circuit pack, and it replaces the TN756, TN768, and TN780 circuit packs, while providing the same functionality as the TN748 and TN420 circuit packs.

Required Tools

The following tools and items may be required during the upgrade:

- High-intensity flashlight or AC drop light
- 3/8-inch flat-blade screwdriver with a 10-inch shank (minimum)
- 5/16-inch and 1/4-inch sockets with a ratchet and 10-inch extension
- Power screwdriver (optional)
- Long-nose pliers to disconnect grounding straps and straighten backplane pins
- Static-proof or original circuit-pack packaging for transporting circuit packs
- Labels for identifying the port circuit packs and cables attached to the rear of cabinets
- Receptacle for holding approximately 100 self-tapping screws
- 12 spare #12 and #10 self-tapping screws
- 4 spare carrier grounding straps
- Authorized wrist grounding strap
- Repair kit for backplane pins (KS-22876 L2 or equivalent)
- One copy of each of the following manuals:
  - *DEFINITY Communications System Generic 3r V4 Maintenance*, 555-230-105, Issue 4
  - *DEFINITY Communications System Generic 3 V4 Implementation*, 555-230-655

Preventive Maintenance

During the G3r V4 upgrade, follow routine preventive maintenance procedures on the system to be upgraded. For information about the procedures and necessary equipment, refer to the “Preventive Maintenance’’ section in *DEFINITY Communications System Generic 3r V4 Maintenance*, 555-230-105, Issue 4.

Verify System Status

Before proceeding, the system should be examined for alarms, and every problem should be corrected. The system must be alarm-free.

Label Cables

To make reconnecting the cables simpler and more reliable, label both ends of the connector cables associated with the carrier to be removed (if not already labeled).

Shut Down DEFINITY AUDIX System

1. See WARNING. If a DEFINITY AUDIX System resides in the system to be upgraded, shut down the AUDIX assembly and allow the disk to completely spin down.

   WARNING:
   Neglecting to shut down an AUDIX assembly before powering down the system cabinet where it resides can damage the AUDIX disk.

2. See WARNING. To avoid an unexpected AUDIX reboot after an unplanned switch reboot, unseat the AUDIX assembly from its backplane connectors.

   WARNING:
   Before inserting or removing a circuit pack from a cabinet, put on a wrist strap and attach its plug or clip to the cabinet's frame.

Power Down System

See CAUTION. At the power-distribution unit, set the main circuit breaker to OFF.

CAUTION:
Powering down the control cabinet will cause important system data, such as BCMS data, records of queued ACD calls, Automatic Wakeup requests, and Do Not Disturb requests to be lost. Refer to DEFINITY Communications System Generic 1, Generic 3i, Generic 3i-Global, and Generic 3i V4 Maintenance, 555-204-105, Issue 7, for information about preparing the system for a power down. BCMS data cannot be stored to or retreived from tape.

Install Power-Failure Transfer Ground Strap

CAUTION:
To avoid contaminating single-point ground, do not connect the ground strap while the system is powered up.

1. Connect a strap's lead either to pin 49 of the connecting block or to pin 49 of the CAP (cable access panel) associated with the power-failure transfer panel.
2. Route the other lead to an approved ground source.
3. Connect the lead to the approved ground source.

Remove Door and Panels and Disconnect Cables

1. Remove the front door from the cabinet (if desired).
2. With the cable retainer in front of you and the part number visible (4B or 4C), locate the slot that is almost vertical. (This slot is adjacent to the part number.) Insert a flat-blade screwdriver with a wide blade (1/4-inch recommended) into the slot, and twist the screwdriver. The retainer will snap open easily so that the cable can be removed.
3. At the cabinet, disconnect previously labeled cables associated with the carrier to be removed.
4. Behind the cabinet, remove the top three panels (positions A, B, and C) and the bottom panel. (Two different types of screws hold the back panels to the cabinet. The #10 screws can be removed with a screwdriver or a 1/4-inch socket. The #12 screws can be removed with a screwdriver or a 5/16-inch socket.)

Remove Circuit Packs from Carrier A

1. To ensure that circuit packs and power units in the ''A'' carrier are properly replaced, label each component with its slot number.
2. Disconnect the power cords from the power units in the ''A'' carrier.
3. See WARNING. Remove all circuit packs and power units from carrier ''A.'' Store the circuit packs in the static-proof packaging.

   WARNING:
   Before inserting or removing a circuit pack from a cabinet, put on a wrist strap and attach its plug or clip to the cabinet's frame.

4. Remove the circuit pack blanks from slots not containing circuit packs.
5. Remove the front trim plate from the ''A'' carrier by pulling straight off.

Remove Tape Drive

NOTE:
The tape drive does not have to be removed at this time. It can be disconnected now, and then removed at a later date when time is less critical.

1. Remove tape.
2. Disconnect the AHF4 cable adapter from behind slot ‘‘07’’ of control carrier ‘‘A’’ (see Figure 3-17).
3. Open the snap connectors, and remove the cable from the adapter. Route the cable back to the tape drive, and remove it. There are two cable clamps on the cabinet side panel. Use a screwdriver to unsnap them. Neither the cable nor the adapter will be used in the upgraded cabinet.
   - On the HCMR tape drive, disconnect the power supply from the front of the unit. Then, remove the screws (at the rear of the unit) that attach the drive to the chassis, and slide the tape drive out the front of the cabinet.
   - On the RMSS tape drive, disconnect the red and black wire. Remove the faceplate. Then, remove the screws that hold the unit to the chassis. Slide the drive out the front of the cabinet.
4. Coil the red and black wire in a out-of-the-way position in the cabinet.
5. Install the 176A apparatus blank over the empty space left by the removal of the tape drive.

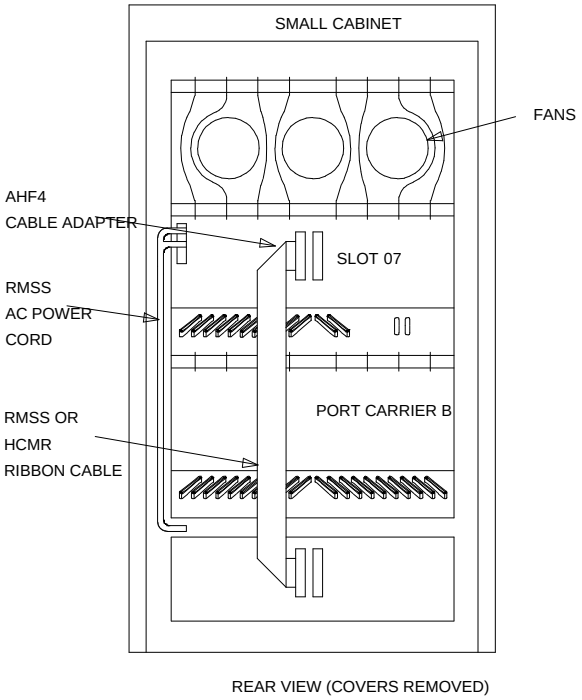

Figure 3-17. R1V3 System Cabinet

Remove Control Carrier A

1. See CAUTION and NOTE. Remove the TDM cable and AHF3 cable adapters from between the ‘‘A’’ and ‘‘B’’ carriers (see Figure 3-18). They will not be reused.

   CAUTION:
   When removing the cable adapters, be careful that none of the short pieces of shrink tubing come off the four corner pins of the pin-field block. Otherwise, when the new equipment is connected, -48 volts could short to ground.

   NOTE:
   Before disconnecting each cable adapter, note its position.

2. Disconnect one end of the eight ground straps (between the ‘‘A’’ and ‘‘B’’ carriers) from the ‘‘A’’ carrier (see Figure 3-19). These straps will be reconnected to the new ‘‘A’’ carrier.
3. Slide the latch up, and disconnect the ‘‘P1’’ (small 9-pin) connector and the ‘‘P2’’ (large 37-pin) connector from the ‘‘A’’ carrier (see Figure 3-20). Move the cables into a position where they will not interfere with removing the carrier.
4. Remove the fan trim plate by pulling straight off.
5. Clean or replace the air filter (403326820) if necessary.
6. In front of carrier, remove the four screws (top two first) holding the ‘‘A’’ carrier to the cabinet frame. Use a long-handle screwdriver or 5/16-inch socket with a 10-inch extension.
7. See CAUTION. Slide the carrier forward 1 to 2 inches; then, from the back, be sure that no cables or wiring harnesses are caught on the cabinet/carrier framework.

   CAUTION:
   Cables and wiring harnesses can be damaged if they catch on the framework and if too much pressure is applied in removing the carrier.

8. Remove the carrier by sliding it out the front of the cabinet.

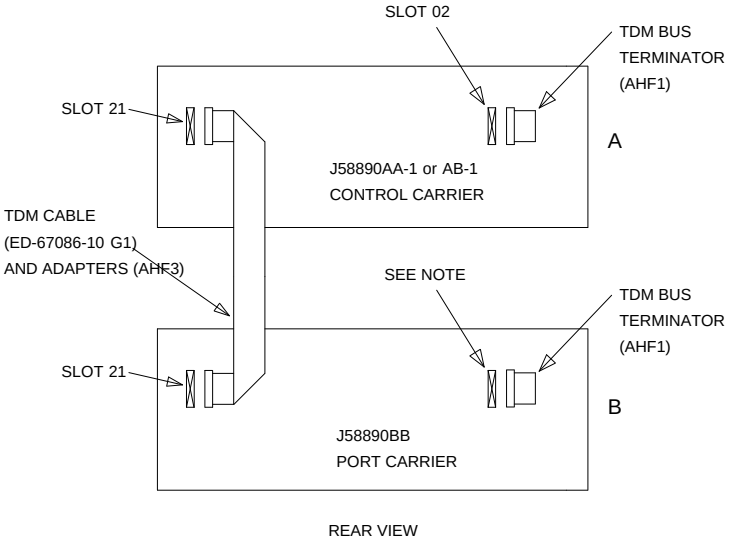

NOTE: ON PORT CARRIER J58890BB-1, DISCONNECT THE TDM TERMINATOR FROM SLOT 02.
ON PORT CARRIERS J58890BB-2 AND J58890BB-3, DISCONNECT THE TDM TERMINATOR FROM SLOT 01.
IF THE PORT CARRIER HAS BOTH J58890BB-1 AND J58890BB-2 STENCILLED ON IT, TREAT IT
AS A J58890BB-1.

Figure 3-18. TDM Connections for Small R1V3 System

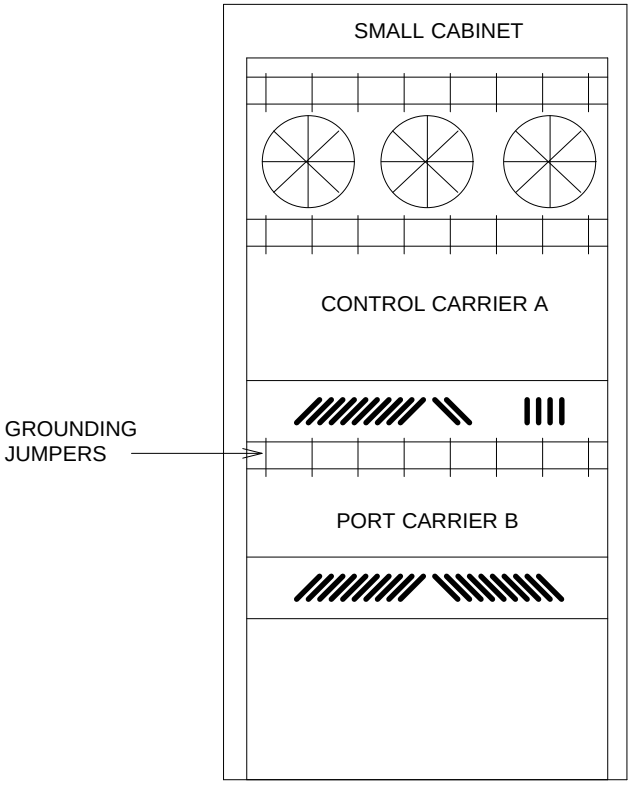

Figure 3-19. Locations of Grounding Jumpers

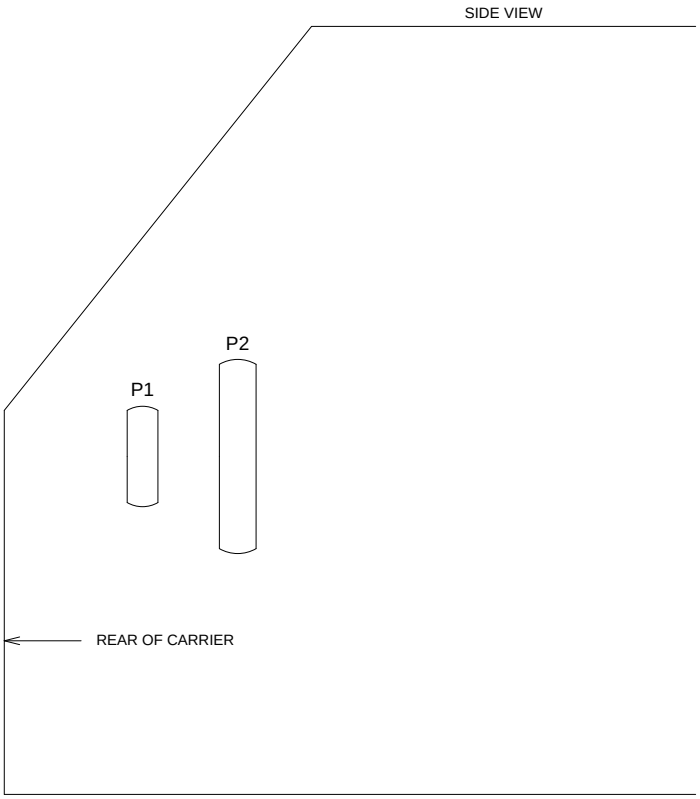

Figure 3-20. Location of P1 and P2 Connectors

Prepare New Expansion Control Carrier A

1. Visually inspect the new carrier for any damage. Verify that the backplane pins are not bent.
2. Place the expansion control carrier on the floor so that the rear of the carrier faces up.
3. Install the CFY1 current limiter (CURL) on the ‘‘A’’ carrier to the pin-field block marked ‘‘CURL.’’ The CURL is inserted with the components on the left side as viewed from the rear.
4. At the rear connector panel, determine which connectors will have a cable attached, and install a 4B cable retainer on each of these connectors.

Install New Expansion Control Carrier A

1. Install the J58890AF-1 expansion control carrier in position ‘‘A’’ by lining up the carrier with the screw holes in the cabinet. Ensure that the power cords are properly placed in the slots at the sides of the carrier.
2. See CAUTION. Fasten the carrier into position with four self-tapping screws saved from the removal of the old carrier.

   CAUTION:
   Carefully realign the threads on the self-tapping screws by turning them clockwise a turn or two before tightening them to avoid stripping the threads out of the framework.

3. Connect the ‘‘P2’’ and ‘‘P1’’ (large and small) connectors to the ‘‘A’’ carrier (see Figure 3-21). If necessary, to get enough slack in the cables, cut the tie wrap holding the intercabinet cable to the upright in the area of the carrier being installed. Snap the connector lock into place to ensure that the connection is properly made.
4. Connect the eight ground straps from the ‘‘B’’ carrier to the new ‘‘A’’ carrier (see Figure 3-19). These straps were left connected to the ‘‘B’’ carrier when the old ‘‘A’’ carrier was removed.

5. See NOTE. For an AC-powered expansion control carrier, install the two new carrier-ground straps. One strap connects ground point ‘‘1’’ to the A-carrier frame (on the right side), and the other connects ground point ‘‘8’’ to the A-carrier frame (on the left side).

   NOTE:
   DC-powered carriers do not use these carrier-ground straps.

6. Connect the TDM/LAN bus between the ‘‘A’’ and ‘‘B’’ carriers using the new WP-91716 L6 TDM/LAN cable. The cable is connected to the pin-field block marked ‘‘TDM’’ on the left side of both carriers. (See Figure 3-22 and Table 3-6.)

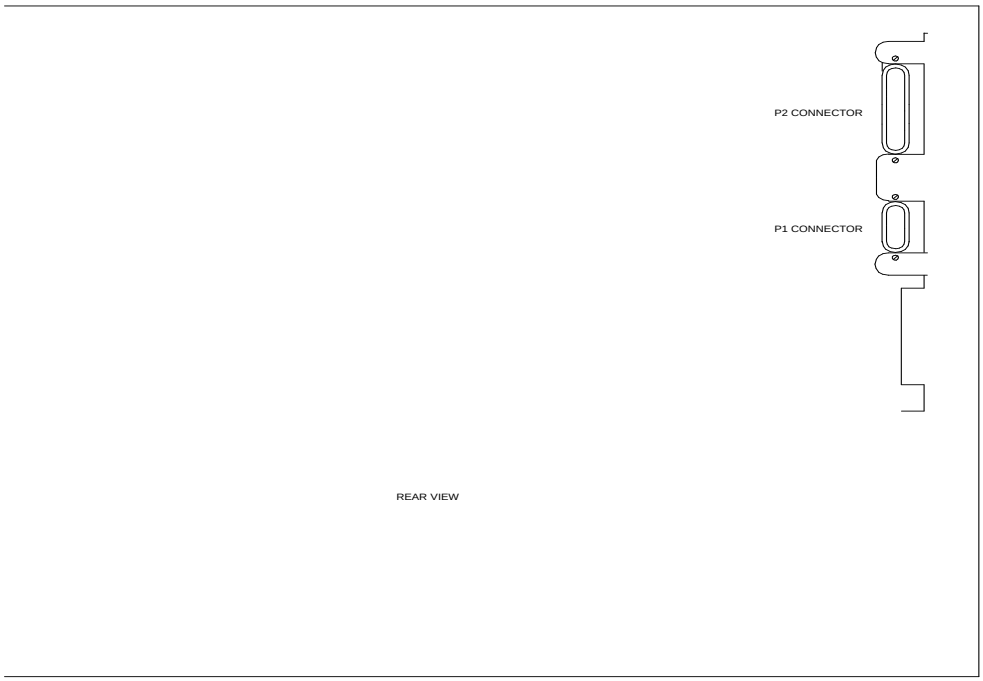

Figure 3-21. Location of P1 and P2 Connectors on DEFINITY Carrier

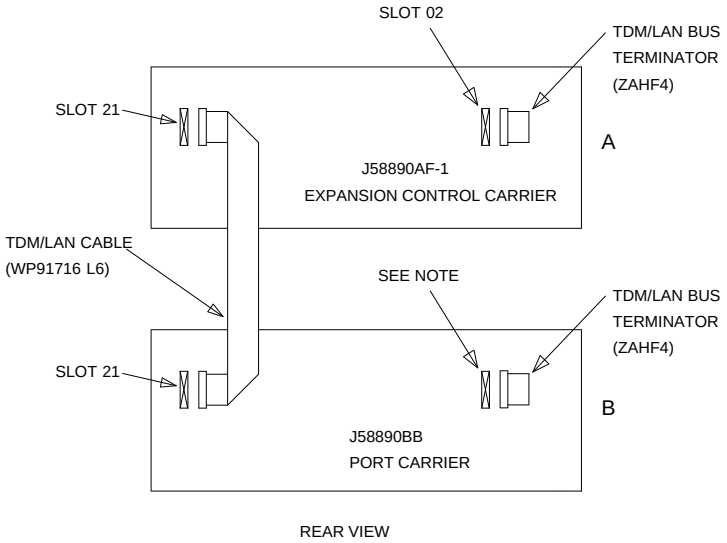

NOTE: ON PORT CARRIER J58890BB-1, CONNECT THE TDM/LAN TERMINATOR TO SLOT 02.
ON PORT CARRIERS J58890BB-2 AND J58890BB-3, CONNECT THE TDM/LAN TERMINATOR TO SLOT 01.
IF THE PORT CARRIER HAS BOTH J58890BB-1 AND J58890BB-2 STENCILLED ON IT, TREAT IT
AS A J58890BB-1.

Figure 3-22. TDM/LAN Connections for G3r V4 EPN

Table 3-6. TDM/LAN Connections

"J" Number	Carrier Type	LHS Slot	RHS Slot
J58890BB-1	Port	21	02
J58890BB-2	Port	21	01
J58890BB-3	Port	21	01
J58890AF	EPN Control "A"	21	02

7. See CAUTION. At the pin-field blocks marked ‘‘TDM,’’ replace the existing TDM bus terminators on carriers ‘‘A’’ and ‘‘B’’ with the new ZAHF4 TDM/LAN bus terminators. (See Figure 3-18 and Figure 3-22 and Table 3-6.)

   CAUTION:
   When removing the terminators, be careful that none of the short pieces of shrink tubing come off the four corner pins of the pin-field block. Otherwise, when the new equipment is connected, -48 volts could short to ground.

8. Install the front trim plates on the ‘‘A’’ carrier. Install the fan trim plate.
9. Peel the old decal strip (designation strip) from the trim plates. Then, install the new decal strip at the bottom of the trim panel.
10. Install the new connector-panel decal on the rear connector panel.
11. Install the 631-type power units (removed from R1V3) into both the ‘‘A’’ and ‘‘B’’ carriers. Three different pairs of AC power units have been developed. They are the 631AR1 and 631BR1, the 631WA1 and 631WB1, and the 631DA1 and 631DB1. Since power units from the newer pairs are downward compatible with the older ones, power units from different pairs can reside in the same carrier.

    However, do not interchange the physical locations of the units. The 631AR1, 631WA1, or 631DA1 are installed in the left side, while the 631BR1, 631WB1, or 631DB1 are installed in the right side (see Figure 3-23).

12. If the expansion control carrier contains a 631BR1 or 631WB1 power unit, install the previously removed TN736 power unit in port slots ‘‘18’’ and ‘‘19’’ of the carrier (adjacent to the 631BR1 or 631WB1). If the system is equipped for neon message waiting, a TN752 or TN755 power unit must be used.

    NOTE:
    A TN736 is not required when a 631DB1 power unit is used in a J58890A expansion control carrier or in a J58890BB-2 or -3 port carrier. It is always required in the J58890BB-1 port carrier, regardless of which 631 power unit is provided. Use a TN752 or TN755 if the system is equipped with neon message waiting.

13. Connect the power cords to the power units. The power cords are the white cables equipped with plugs that are run through the slots in the front of each carrier (see Figure 3-24).

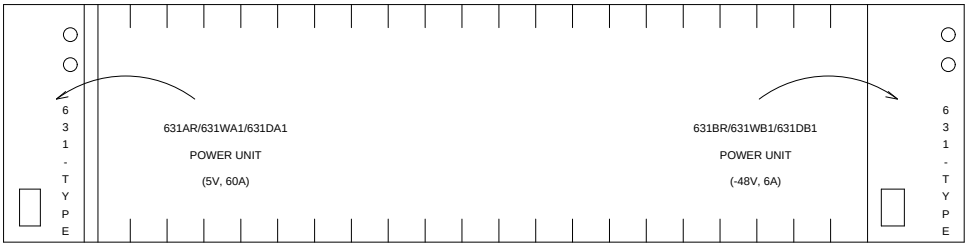

Figure 3-23. Locations of Power Units

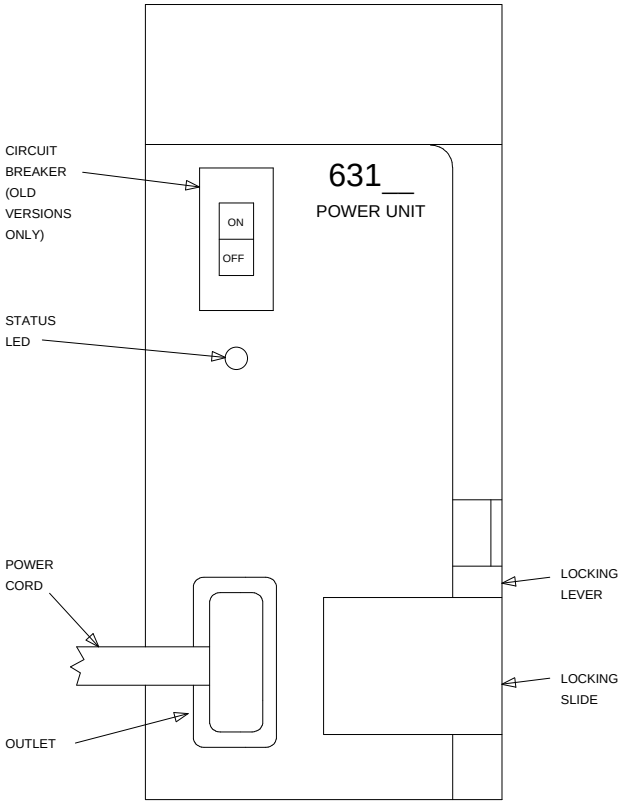

Figure 3-24. 631-Type Power Unit

Install Circuit Packs

1. See WARNING. Install the new G3r V4 control circuit packs into expansion control carrier ‘‘A.’’ Use the following figure, the new decal, and the annotated ‘‘list configuration all’’ (provided with the G3r V4 tape) as a guide.

   WARNING:
   Before inserting or removing a circuit pack from a cabinet, put on a wrist strap and attach its plug or clip to the cabinet’s frame.

2. See preceding WARNING and following WARNING and NOTE. Install the previously removed port circuit packs into the ‘‘A’’ carrier using the decal and the annotated ‘‘list configuration all’’ (provided with the G3r V4 tape) as a guide.

   WARNING:
   These installed port circuit packs must conform to the usable vintage requirements for a G3r V4 system (see Reference Guide for Circuit-Pack Vintages and Change Notices).

   NOTE:
   Since the new G3r V4 expansion control carrier has seven to eleven more port slots than the removed control carrier, there should not be a need to move and retranslate these circuit packs.

   If a port circuit pack was located in slot ‘‘01’’ of control carrier ‘‘A,’’ the STS software upgrade retranslated this circuit pack to occupy an empty port slot in the new expansion control carrier.

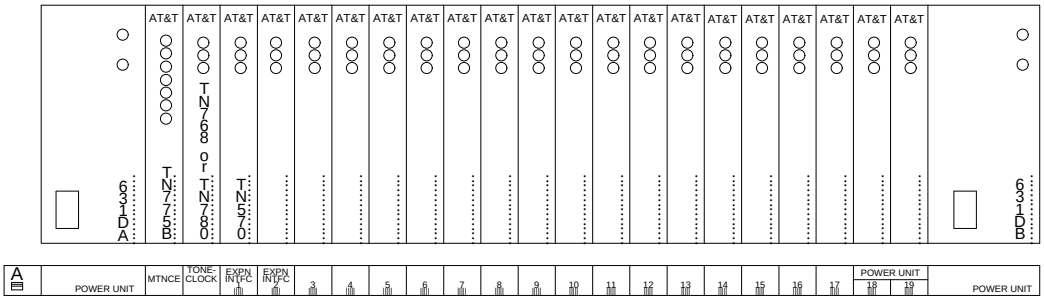

Figure 3-25. Circuit-Pack Locations in G3r V4 Expansion Control Carrier

3. Install circuit-pack blanks in slots not equipped with circuit packs.
4. Ensure that the PPN associated with this EPN is equipped with a TN570.

Interconnect Port Networks

See NOTES. Fiber-optic cabling terminated to 9823A lightwave transceivers can interconnect port networks (PNs) located up to 4,900 feet (about 9/10 mile) apart. Whereas, fiber-optic cabling terminated to 9823B lightwave transceivers can interconnect port networks located up to 25,000 feet (about 4.7 miles) apart. When available and whenever the desired distance between the port networks is less than 25,000 feet, fiber is the preferred medium for interconnecting port networks, providing significantly higher-bandwidth connectivity than DS1C remoting.

NOTE:
As always, these distance limitations are approximate measurements of the *actual* fiber right-of-way (not of the shortest linear distance) between the two endpoints.

NOTE:
It is important to label every cable that you install. For details, refer to the section, *Labels for Fiber-Optic Cables*, in Appendix E of the installation manual.

NOTE:
Throughout these procedures, remember to keep track of which fiber is attached to which connector on each lightwave transceiver. This section provides figures offering the suggested way of making these connections.

The connectors on the lightwave transceivers are labeled either “TX” (transmit) or “RX” (receive), while the fibers attached to each connector are numbered either ‘‘1’’ or ‘‘2.’’ A viable fiber connection is only made when both fibers in each cable (that is, ‘‘1’’ and ‘‘2’’) route from the “TX” connector of a port network to the “RX” connector of its adjacent port network. For an example, refer to Figure 3-27.

NOTE:
For implementation details, refer to the ‘‘Fiber Link Administration’’ sections of *DEFINITY Communications System Generic 3 V4 Implementation*, 555-230-655.

Collocated Port Networks

When a high-reliability PPN and EPN are collocated, one fiber-optic cable (FL2P-P-XX) and two lightwave transceivers (9823-type) are required for EPN connections.

NOTE:
For the FL2P-P-XX fiber-optic cable, the -XX suffix represents the length of the cable in feet. Based on floor-plan considerations, the length of these cables may vary. However, 20-foot cables are normally adequate for a G3r V4 with two port networks.

For collocated cabinets, the fiber-optic cable should be routed directly from the PPN to the EPN cabinet. Since, for this upgrade, a ''DEFINITY style'' PPN cabinet is next to a small EPN cabinet, the preferred routing is to run the cable down the cable tray and out the bottom of the PPN cabinet. The cable is then run to the EPN cabinet and up the outside of the rear panels to the desired carrier level.

Fiber-Remoted Port Networks

When a high-reliability PPN and EPN are remotely separated with fiber, two fiber-optic cables (FL2P-P-XX), two lightwave transceivers (9823-type), and two lightwave-interface units (provided by the PSC) are required.

For remote cabinets, the cables should be routed down the cable tray and out the bottom of the cabinet to the cross-connect field where the lightwave-interface units are located.

DS1C-Remoted Port Networks

When a high-reliability PPN and EPN are remotely separated with DS1 facilities, two DS1C circuit packs (TN574), two DS1C-to-EI cables (846448637 and/or 846448645), two H-600-348 cables, from one to four pairs of channel service units (CSUs), and from one to four pairs of wall-field cables (provided with the CSUs) are required.

In any case, use cable ties to secure the cables against the walls of the cable tray at the cable-tie positions built into the trays.

One Collocated Expansion Port Network

1. Behind port carrier C of the PPN cabinet (see Figure 3-26 and Figure 3-27):
   - Install a 9823-type lightwave transceiver on the cable connector at slot 1C02.
   - Connect one end of the fiber-optic cable to the 9823-type lightwave transceiver, just installed, at slot 1C02.
   - Route the fiber-optic cable from the 9823-type lightwave transceiver to the cabinet's cable tray and downward out of the cabinet to the EPN.
   - Delicately attach the fiber-optic cable (with cable ties) to the wall of the cable tray at the built-in cable-tie positions.
2. Behind control carrier A of the EPN cabinet:
   - Install the same kind (either 9823-A or 9823-B) of lightwave transceiver on cable connector at slot 2A01.
   - Connect the other end of fiber-optic cable to the 9823-type lightwave transceiver, just installed at slot 2A01.
   - Delicately attach the fiber-optic cable (with cable ties) to the rear panels of the EPN cabinet.
   - Coil up the surplus length of fiber-optic cable, and place the coil either in the cable manager or on the bottom shelf (holding the power supply) of the PPN cabinet.

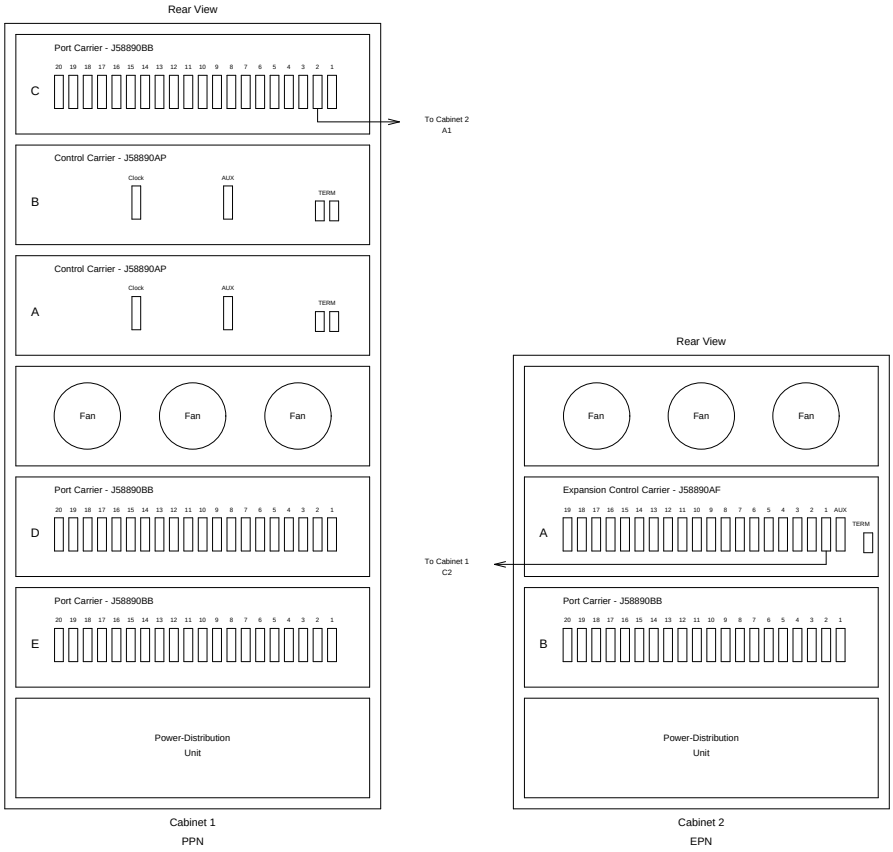

Figure 3-26. High-Reliability G3r V4 with Two Port Networks

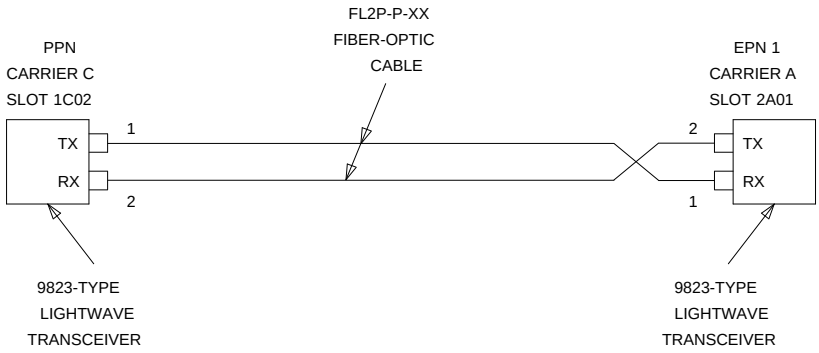

Figure 3-27. Fiber-Optic Connections PPN to EPN

One Fiber-Remoted Expansion Port Network

1. Behind port carrier C of the PPN cabinet (see Figure 3-26 and Figure 3-28):
   - Install a 9823-type lightwave transceiver on the connector at slot 1C02.
   - Connect one end of the fiber-optic cable to the 9823-type lightwave transceiver at slot 1C02.
   - Route the fiber-optic cable from the 9823-type lightwave transceiver to the cabinet cable tray and downward out of the cabinet through the cable manager to the PDS cross-connect facility.
   - At the PDS cross-connect facility, connect the fiber-optic cable to the lightwave-interface unit provided.
   - Delicately attach the fiber-optic cable (with cable ties) to the wall of the cable tray at the built-in cable-tie positions.
2. Behind control carrier A of the EPN cabinet:
   - Install the same kind (either 9823-A or 9823-B) of lightwave transceiver on cable connector at slot 2A01.
   - Connect the fiber-optic cable to the 9823-type lightwave transceiver at slot 2A01.
   - Route the fiber-optic cable from the 9823-type lightwave transceiver to the cabinet cable tray and downward out of the cabinet through the cable manager to the PDS cross-connect facility.
   - At the PDS cross-connect facility, connect the fiber-optic cable to the lightwave-interface unit provided.

- Delicately attach the fiber-optic cable (with cable ties) to the rear panels of the EPN cabinet.
- Coil up the surplus length of fiber-optic cable, and place the coil either in the cable manager or on the bottom shelf (holding the power supply) of the PPN cabinet.

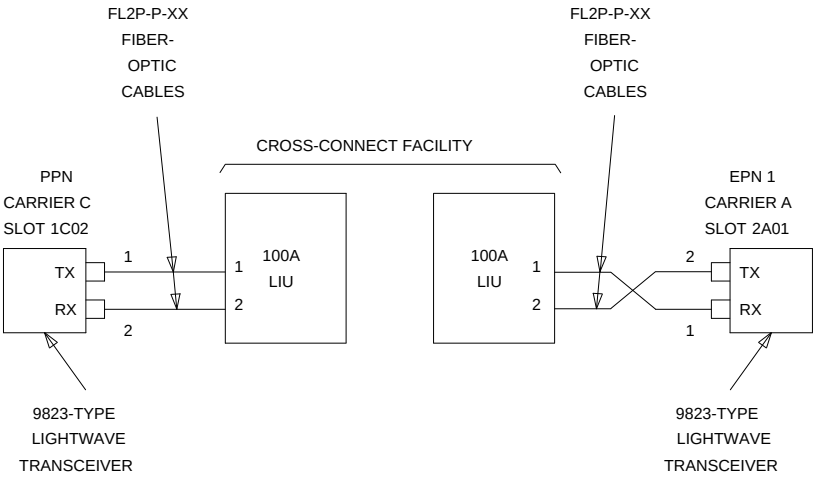

Figure 3-28. Fiber-Optic Connections PPN to EPN

DS1C-Remoted Cabinets

See NOTES. Digital Services 1 (DS1) facilities and associated equipment-room hardware and cabling can interconnect two port networks (PNs) located up to 100 miles apart. Although DS1 remoting always serves as a lower-bandwidth alternative to fiber remoting, DS1 remoting is especially attractive when:

- Fiber-optic cabling is unavailable to the remote site
- When the desired distance between the port networks exceeds the practical fiber limit of 25,000 feet (about 4.7 miles)
- Digital Services facilities, with enough bandwidth for interconnection, already exist between the two port networks

NOTE:
As always, these distance limitations are approximate measurements of the *actual* fiber or copper right-of-way (not of the shortest linear distance) between the two endpoints.

NOTE:
The 100-mile limit for DS1 remoting is the maximum distance between *any* two port networks in a G3r V4 system with either direct or switched

port-network connections.

For example, in a *directly connected* system, a single EPN can be remoted up to 100 miles. This is because the length of the *direct* fiber connection from any port network in the local equipment room to the remote EPN is 100 miles.

However, if more than one EPN is remoted in a directly connected system, the 100-mile limit applies to any two port networks. Assuming straight cable runs, suppose that a customer wants to remote one EPN 80 miles due east and another EPN due north of the local PPN. This arrangement can only be accommodated if the second EPN resides no more than 60 miles north of the PPN. This is because the direct fiber distance between the two EPNs is also limited to 100 miles.

As another example, in *switch-connected* system with numerous port networks, one EPN might be remoted 75 miles from the switch node. If this were the case, then the maximum distance that any other EPN could be remoted would be 25 miles.

Digital public-network tie-trunk facilities provide the end-to end connectivity between the port networks. For either type of port network (PPN or EPN), a TN574 DS1 Converter (DS1C) circuit pack serves as the port-network interface to the DS1 facilities. As a PPN interface, a TN574 DS1C can reside in either:

- A port carrier (in any port slot)
- A switch-node carrier (in port slot ‘‘1’’ or ‘‘21’’)

As an EPN interface, a TN574 DS1C can reside in an expansion control carrier (in any port slot).

DS1 Cabling within the Local Port Networks. See NOTE. Use the running list that accompanies the upgrade equipment to determine which cable should be connected where. The following paragraphs only provide conceptual information about wiring a DS1C interface either to an expansion interface or to a switch-node interface, not step-by-step procedures for wiring a specific G3r V4 system.

NOTE:
It is important to label every cable installed. For details, refer to the section, *Labels for Fiber-Optic Cables*, in Appendix E of the installation manual.

See NOTE. As shown in Figure 3-29, a cable connects each DS1C either to the appropriate TN570 expansion interface (for a direct connection to another port network) or to the appropriate TN573 SN Interface (for a switched connection to another port network).

NOTE:
For the purposes of an R1V3 to G3r V4 upgrade, this cable will usually connect to a TN570 expansion interface (already installed) for a direct connection between the new PPN and the upgraded EPN.

On the DS1C side, a 4C retainer binds this shielded cable to the DS1C port connector. On the EI/SNI side, a 4B retainer binds the cable to the EI/SNI port connector. The DS1C-to-EI/SNI cable also provides a piggy-back connector enabling subsequent access to the public network. Table 3-7 lists the cable numbers and lengths for the possible connections.

Table 3-7. Numbers and Lengths of DS1C-to-EI/SNI Cables

Connection Type	Comcode Number	Length
Within same carrier	846448637	1 foot
Between two carriers in same port network	846448645	5.5 feet
Between two carriers in adjacent networks	846448652, and one 846885259 bracket	1 foot (used with two 9823As, & one 20-foot fiber-optic cable)

DS1 Cabling to the Public Network. See NOTE. Use the running list that accompanies the upgrade equipment to determine which cable should be connected where. The following paragraphs only provide conceptual information about wiring a DS1C interface to a wall-field block, not step-by-step procedures for wiring a specific G3r V4 system.

NOTE:
It is important to label every cable that you install. For details, refer to the section, *Labels for Fiber-Optic Cables*, in Appendix E of the installation manual.

Figure 3-29 also shows the cabling between various port networks and the cross-connect field where the public network is accessed. If already connected to either an expansion or switch-node interface, a DS1C circuit pack already resides either in an EPN expansion control carrier or in a PPN port carrier or switch-node carrier.

Depending on the traffic requirements between the two port networks, a 25-foot H600-348 cable extends from the piggy-back connector (on each DS1C-to-EI/SNI cable) to from one to four channel service units (CSUs). [This cable branches to four 15-pin subminiature D-type connectors (labeled ‘‘01’’ to ‘‘04’’) to make the CSU connections.] Then, in turn, the CSU(s) are connected to the wall-field block (corresponding to the equipment location of the DS1C) at port connections ‘‘8,’’ ‘‘7,’’ ‘‘6,’’ and ‘‘5’’ (in descending order).

Neglecting overhead, this wiring arrangement can provide PN-to-PN communication at the bandwidth of up to four DS1 spans (1.544 Mbps each). Between each port network’s wall field, the port networks communicate across leased lines in the public network.

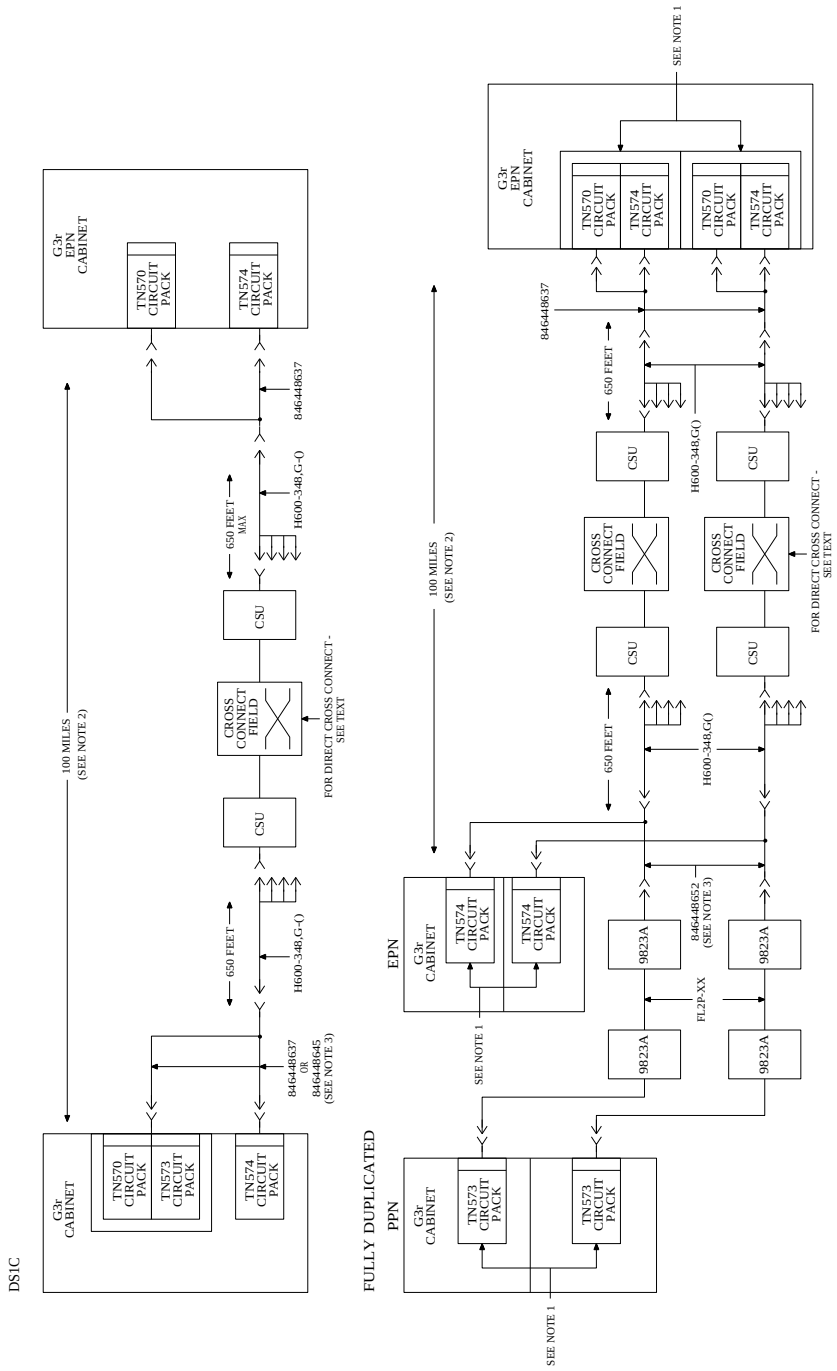

Figure 3-29. DS1 Connectivity between Remote PNs

Verify Usable Circuit-Pack Vintages

Verify that every R1V3 circuit pack reused in the upgrade conforms to the usable vintage requirements for a G3r V4 system (see Reference Guide for Circuit-Pack Vintages and Change Notices).

Install System Access Ports

As a prerequisite for connecting various endpoints that use EIA interfaces to the G3r V4 system, install the up to eight loop-around connections for Mode 2-to-Mode 3 (and vice versa) data conversion.

From the *outgoing* perspective of the system communicating with an EIA endpoint, these loop-around connections convert Mode 3 data (circuit-switched packet data, with undefined bit rates and packet specifications) to Mode 2 data (low-speed, usually asynchronous, data at rates of 300 to 19,200 bps) by:

- Accepting Mode 3 data off the LAN bus (from the SPE) at a TN553 Packet Data Line circuit pack, where Mode 3-to-Mode 2 conversion is done
- Routing the converted data through the cross-connect field and back to a TN726B Data Line where the equivalent Mode 2 data can access the TDM bus, for subsequent routing to an EIA endpoint

The endpoints that use these EIA interfaces and, therefore, require the Mode 2-to-Mode 3 conversion include:

- DEFINITY Communications System Generic 3 Management Applications (G3-MA)
- Remote DEFINITY Communications System Generic 3 Management Terminal (G3-MT)
- Basic Call Management System (BCMS) terminal
- Call Detail Recording Unit (CDRU)/Centralized Attendant Service Plus (CAS+)
- Property Management System (PMS)
- Printers

The following figures show this loop-around configuration and how the B25A cables are cross-connected.

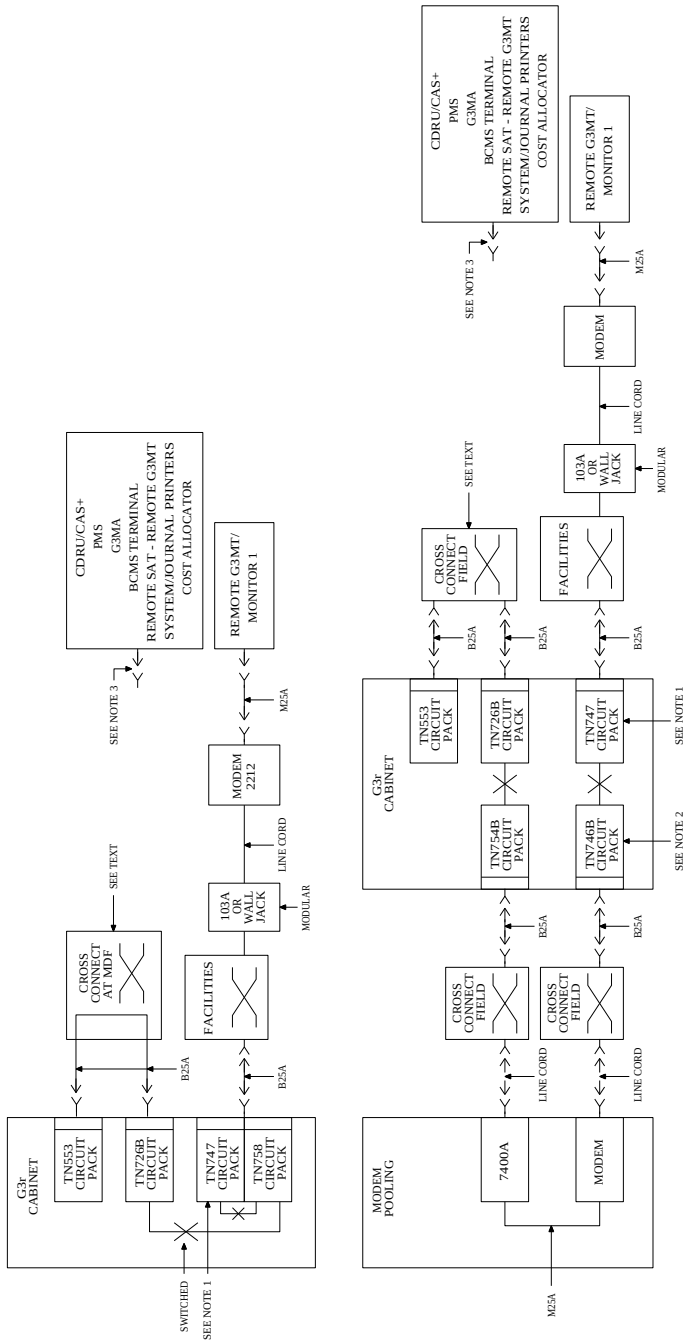

Figure 3-30. Connections: CDRU/CAS+, PMS, BCMS, Printers, G3-MA/MT

Pinouts for the TN553 and TN726B circuit packs shown cross-connected in the preceding figure are given in the table below.

Pinouts

TN553 (12 Ports)

1	26	
2	27	1
3	28	
4	29	2
5	30	
6	31	3
7	32	
8	33	4
9	34	
10	35	5
11	36	
12	37	6
13	38	
14	39	7
15	40	
16	41	8
17	42	
18	43	9
19	44	
20	45	10
21	46	
22	47	11
23	48	
24	49	12
25	50	G

TN726B (8 Ports)

1	26	Blank
2	27	
3	28	1
4	29	Blank
5	30	
6	31	2
7	32	Blank
8	33	
9	34	3
10	35	Blank
11	36	
12	37	4
13	38	Blank
14	39	
15	40	5
16	41	Blank
17	42	
18	43	6
19	44	Blank
20	45	
21	46	7
22	47	Blank
23	48	
24	49	8
25	50	Blank

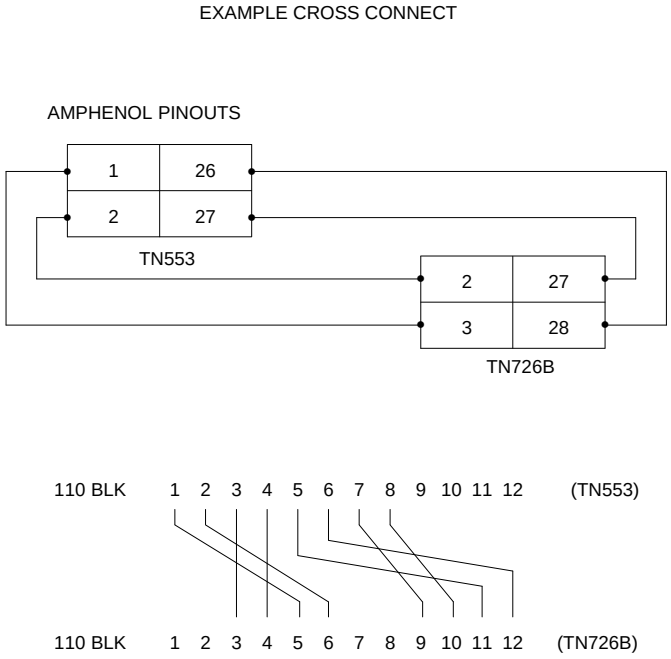

Figure 3-31. Example of Cross Connect between TN553 and TN726B

Reseat DEFINITY AUDIX System

See WARNING. If a DEFINITY AUDIX System resides in the system, reseat the AUDIX assembly to its backplane connectors.

WARNING:
Before inserting or removing a circuit pack from a cabinet, put on a wrist strap and attach its plug or clip to the cabinet's frame.

Remove Power-Failure Ground Strap

Remove the ground strap from the power-failure transfer unit.

Reboot the System

1. Connect the G3-MT to the connector labeled ''TERMINAL'' behind PPN control carrier ''A,'' or install the G3-MA according to the ''Set Up G3-MA'' chapter of *DEFINITY Communications System Generic 3 Management Applications — Operations*, 585-229-202.
2. Verify that the new G3r V4 system tape is inserted in the PPN cabinet.

3. At the EPN power-distribution unit, set the main circuit breaker to ON.
4. At the PPN power-distribution unit, set the main circuit breaker to ON.
5. The system now goes through the reset level 4 rebooting process, loading blank translations from the *disk* (not the new tape). Rebooting requires 5 to 11 minutes.
6. Enter reset system 4 tape. Press (RETURN). This command instructs the system to go through the reset level 4 rebooting process, loading the upgraded STS translations from the new *tape*. Rebooting requires 5 to 11 minutes.

   Refer to ''Initialization and Recovery'' and ''LED Interpretation'' chapters in *DEFINITY Communications System Generic 3r V4 Maintenance*, 555-230-105, Issue 4, for circuit-pack LED indications and screen displays that occur during system reboot.
7. Log in at the `login:` prompt on the G3-MT or G3-MA, and set the time to ensure that the system is booted properly.
8. Enter **`status spe`**, and press (RETURN) to verify that the standby SPE is refreshed and that the standby disk is in service.
9. Enter **`restore disk both full`**. Press (RETURN). This command instructs the system to write the upgraded STS translation information from memory to the disks.
10. Enter **`reset system 4`**. Press (RETURN). This command instructs the system to go through the reset level 4 rebooting process, loading the upgraded STS translations from the *disk*. Rebooting requires 5 to 11 minutes.

    NOTE:
    Certain forms have changed for G3r V4. Upgraded R1V3 translations may appear on a different form, fields may have shifted within a form, and/or the names assigned to particular fields may have changed. Refer to Table 3-1 and to *DEFINITY Communications System Generic 3r Transition Reference*, 555-230-636, and *DEFINITY Communications System Generic 3 V4 — Implementation*, 555-230-655, and make the necessary changes.

Relabel Wall Field

If not done during the installation of new PPN, relabel the wall field with the new port-network number of the upgraded G3r V4 EPN. (For an upgrade of an R1V3 system, the STS software upgrade assigned port-network number ''2'' to the upgraded EPN.)

Close EPN Cabinet and Reconnect Cables

1. At the EPN power-distribution unit, set the main circuit breaker to OFF.

NOTE:
Powering down the EPN without powering down the PPN will set off alarms. However, these alarms should clear after power is restored to the EPN.

2. Temporarily disconnect the lightwave transceivers and fiber-optic cables, already labeled, from the appropriate carriers.
3. Replace the back panels previously removed.
4. At the EPN cabinet, reconnect the lightwave transceivers, fiber-optic cables, and the connector cables associated with the carrier being replaced.
5. Install the front door on the EPN cabinet if previously removed.
6. Install a DEFINITY label on the EPN cabinet.

Power Up the EPN Cabinet

1. At the EPN power-distribution unit, set the main circuit breaker to ON.

   After about 40 seconds, EPN power and PPN/EPN communications return.
2. After power returns to the EPN and all trouble is cleared, verify that the EMERGENCY TRANSFER CONTROL switch is set to AUTO. This restores the system to the normal mode.

Retranslate Port Circuits

If port circuit packs in the R1V3 control carrier were relocated in order to put:

- A critical port circuit pack, requiring longer nominal battery holdover (e.g., a DS1 or an Announcement circuit pack), in a port slot
- A TN736, TN752, or TN755 power supply in port slots ‘‘18’’ and ‘‘19’’
- A TN570 Expansion Interface in port slot ‘‘1’’
- A TN570 Expansion Interface in port slot ‘‘2’’ (for a simultaneous EPN addition)

of the new expansion control carrier, verify that they were retranslated during the off-site software upgrade. If not, they must be retranslated now. Refer to *DEFINITY Communications System Generic 3 V4 Implementation*, 555-230-655, for instructions on performing the retranslations.

Rerecord Announcements

The off-site STS translation upgrade did not preserve the contents of recorded announcements. Therefore, if a TN750 Announcement circuit pack resides in the system, any announcements that were stored on the circuit pack must be rerecorded.

Run Acceptance Tests

Refer to Chapter 11 of *DEFINITY Communications System Generic 1 and Generic 3 Installation and Test*, 555-230-104, Issue 5, and perform the appropriate tests.

Register System as G3r V4

Get the serial number of the new G3r V4 PPN, and call the INADS Database Administrator at the Technical Service Center (1-800-248-1111) to register the upgraded system as a G3r V4.

Return Replaced System 75 Equipment

The System 75 equipment replaced, during the upgrade to G3r V4, should be returned to AT&T according to the requirements outlined in:

BCS/Material Logistics, MSL/Attended Stocking Locations

Methods and Procedures for Basic Material Returns

The replaced System 75 equipment includes:

- System 75 control carrier and control circuit packs
- System 75 tone-clock circuit pack
- RMSS or HCMR tape drive
- R1V3 tape cartridges
- TDM cables (ED-67086-10 G1) and cable adapters (AHF3)
- TDM bus terminators (AHF1)

R1V3 Small to G3r V4 EPN with Critical Reliability

See NOTE. Refer to *DEFINITY Communications System Generic 1 and Generic 3 Installation and Test*, 555-230-104, Issue 5, to install the new PPN cabinet.

NOTE:
During the wall-field wiring of the PPN installation, the wall field can also be relabeled with the new port-network number of the R1V3 system to be upgraded. (For an R1V3 system, the STS software upgrade assigned the upgraded EPN as port network ‘‘2.’’)

If a second EPN is being added, refer to *DEFINITY Communications System Generic 1 and Generic 3 Installation and Test*, 555-230-104, Issue 5, to install the new EPN.

Cabinet Upgrade

The PPN cabinet associated with this cabinet is a new cabinet. Refer to *DEFINITY Communications System Generic 1 and Generic 3 Installation and Test*, 555-230-104, Issue 5, for the installation procedures.

A small System 75 R1V3 is upgraded to a critical-reliability G3r V4 EPN by:

- Removing the tape-drive unit
- Removing the control carrier in position ‘‘A’’
- Installing the J58890AF-1 expansion control carrier in position ‘‘A’’
- Adding the G3r V4 circuit packs to the EPN
- Restructuring the port circuits as required

Prerequisite Hardware

The equipment in Table 3-8 *must* be on-site before the upgrade begins. Ensure that the tapes are G3r V4 tapes.

To place a claim for missing equipment, as part of the Streamlined Implementation process, call ‘‘1-800-772-5409,’’ and respond to the call prompter.

Table 3-8. Required Hardware

Equipment	Description	Quantity
PEC 6300-07X	Processor Port Network	1
J58890AF	Expansion Control Carrier	1
106647985	TN775B Maintenance	1

Table 3-8. Required Hardware

Equipment	Description	Quantity
103557211	TN768 Tone-Clock	2
or		
103557336	TN780 Tone-Clock	2 (Note 6)
or		
106706955	TN2182 Tone-Clock	1 (Note 7)
103281788	TN570 Expansion Interface	4 (Note 1)
J58890TF	Tape Cartridge	4
105691158	CFY1 Current Limiter	1
H-600-204 G1	Intercarrier Cable A	1
H-600-204 G1	Intercarrier Cable B	1
63300A	FL2P-P-XX Fiber Cable	2 or 4 (Note 2)
106455348	9823-A Lightwave Transceiver	4 (Note 3)
or		
106455363	9823-B Lightwave Transceiver	4 (Note 3)
J58890A L20	WP-91716 L6 TDM/LAN Cable	1 (Note 4)
103960456	ZAHF4 TDM Bus Terminator	2
105731202	176A Apparatus Blank (for removed tape drive)	1
106689516	TN771D Maintenance/Test	1 (Note 5)
846309466	DEFINITY Label	1

Notes:

1. Four are required for a critical-reliability switch with two port networks. Two TN570s are shipped loose with the EPN equipment. The factory has installed the other two TN570s in the new PPN.
2. Four are required if PPN and EPN are remotely located.
3. Four are shipped with the EPN equipment. Two are used in the PPN.
4. Comes attached to the J58890AF-1 carrier.
5. Required for a critical-reliability G3r V4 system.
6. Use TN780 as Tone-Clock for Stratum 3 timing. Also required with the TN780 are the TN748, and TN744 for tone-detection.
7. The TN2182 Tone-Clock provides tone detection, tone generation, and tone-clock in one circuit pack, and it replaces the TN756, TN768, and TN780 circuit packs, while providing the same functionality as the TN748 and TN420 circuit packs.

Required Tools

The following tools and items may be required during the upgrade:

- High-intensity flashlight or AC drop light
- 3/8-inch flat-blade screwdriver with a 10-inch shank (minimum)
- 5/16-inch and 1/4-inch sockets with a ratchet and 10-inch extension
- Power screwdriver (optional)
- Long-nose pliers to disconnect grounding straps and straighten backplane pins
- Static-proof or original circuit-pack packaging for transporting circuit packs
- Labels for identifying the port circuit packs and cables attached to the rear of cabinets
- Receptacle for holding approximately 100 self-tapping screws
- 12 spare #12 and #10 self-tapping screws
- 4 spare carrier grounding straps
- Authorized wrist grounding strap
- Repair kit for backplane pins (KS-22876 L2 or equivalent)
- One copy of each of the following manuals:
  - *DEFINITY Communications System Generic 3r V4 Maintenance*, 555-230-105, Issue 4
  - *DEFINITY Communications System Generic 3 V4 Implementation*, 555-230-655

Preventive Maintenance

During the G3r V4 upgrade, follow routine preventive maintenance procedures on the system to be upgraded. For information about the procedures and necessary equipment, refer to the "Preventive Maintenance'' section in *DEFINITY Communications System Generic 3r V4 Maintenance*, 555-230-105, Issue 4.

Verify System Status

Before proceeding, the system should be examined for alarms, and every problem should be corrected. The system must be alarm-free.

Label Cables

To make reconnecting the cables simpler and more reliable, label both ends of the connector cables associated with the carrier to be removed (if not already labeled).

Shut Down DEFINITY AUDIX System

1. See WARNING. If a DEFINITY AUDIX System resides in the system to be upgraded, shut down the AUDIX assembly and allow the disk to completely spin down.

   WARNING:
   Neglecting to shut down an AUDIX assembly before powering down the system cabinet where it resides can damage the AUDIX disk.

2. See WARNING. To avoid an unexpected AUDIX reboot after an unplanned switch reboot, unseat the AUDIX assembly from its backplane connectors.

   WARNING:
   Before inserting or removing a circuit pack from a cabinet, put on a wrist strap and attach its plug or clip to the cabinet's frame.

Power Down System

See CAUTION. At the power-distribution unit, set the main circuit breaker to OFF.

CAUTION:
Powering down the control cabinet will cause important system data, such as BCMS data, records of queued ACD calls, Automatic Wakeup requests, and Do Not Disturb requests to be lost. Refer to DEFINITY Communications System Generic 1, Generic 3i, Generic 3i-Global, and Generic 3i V4 Maintenance, 555-204-105, Issue 7, for information about preparing the system for a power down. BCMS data cannot be stored to or retreived from tape.

Install Power-Failure Transfer Ground Strap

CAUTION:
To avoid contaminating single-point ground, do not connect the ground strap while the system is powered up.

1. Connect a strap's lead either to pin 49 of the connecting block or to pin 49 of the CAP (cable access panel) associated with the power-failure transfer panel.
2. Route the other lead to an approved ground source.
3. Connect the lead to the approved ground source.

Remove Door and Panels and Disconnect Cables

1. Remove the front door from the cabinet (if desired).
2. With the cable retainer in front of you and the part number visible (4B or 4C), locate the slot that is almost vertical. (This slot is adjacent to the part number.) Insert a flat-blade screwdriver with a wide blade (1/4-inch recommended) into the slot, and twist the screwdriver. The retainer will snap open easily so that the cable can be removed.
3. Disconnect previously labeled cables associated with the carrier to be removed.
4. Behind the cabinet, remove the top three panels (positions A, B, and C) and the bottom panel. (Two different types of screws hold the back panels to the cabinet. The #10 screws can be removed with a screwdriver or a 1/4-inch socket. The #12 screws can be removed with a screwdriver or a 5/16-inch socket.)

Remove Circuit Packs from Carriers A and B

1. To ensure that circuit packs and power units in the ‘‘A’’ and ‘‘B’’ carriers are properly replaced, label each component with its slot number.
2. Disconnect the power cords from the power units in the ‘‘A’’ and ‘‘B’’ carriers.
3. See WARNING. Remove all circuit packs and power units from carrier ‘‘A.’’ Store the circuit packs in the static-proof packaging.
4. See WARNING. Remove circuit packs from slots B01 and B02 in carrier ‘‘B.’’ Store the circuit packs in the static-proof packaging.

   WARNING:
   Before inserting or removing a circuit pack from a cabinet, put on a wrist strap and attach its plug or clip to the cabinet’s frame.

5. Remove the circuit-pack blanks from slots in carrier A that do not contain circuit packs.
6. Remove the front trim plate from the ‘‘B’’ carrier by pulling straight off. Then remove the front trim plate from the ‘‘A’’ carrier.

Remove Tape Drive

NOTE:
The tape drive does not have to be removed at this time. It can be disconnected now, and then removed at a later date when time is less critical.

1. Remove tape.
2. Disconnect the AHF4 cable adapter from behind slot ‘‘07’’ of control carrier ‘‘A’’ (see Figure 3-32).
3. Open the snap connectors, and remove the cable from the adapter. Route the cable back to the tape drive, and remove it. There are two cable clamps mounted on the cabinet side panel. Use a screwdriver to unsnap the cable clamps. Neither the cable nor the adapter will be used in the upgraded cabinet.
   - On the HCMR tape drive, disconnect the power supply from the front of the unit. Then, remove the screws (at the rear of the unit) that attach the drive to the chassis, and slide the tape drive out the front of the cabinet.
   - On the RMSS tape drive, disconnect the red and black wire. Remove the faceplate. Then, remove the screws that hold the unit to the chassis. Slide the drive out the front of the cabinet.
4. Coil the red and black wire in an out-of-the-way position in the cabinet.
5. Install the 176A apparatus blank over the empty space left by the removal of the tape drive.

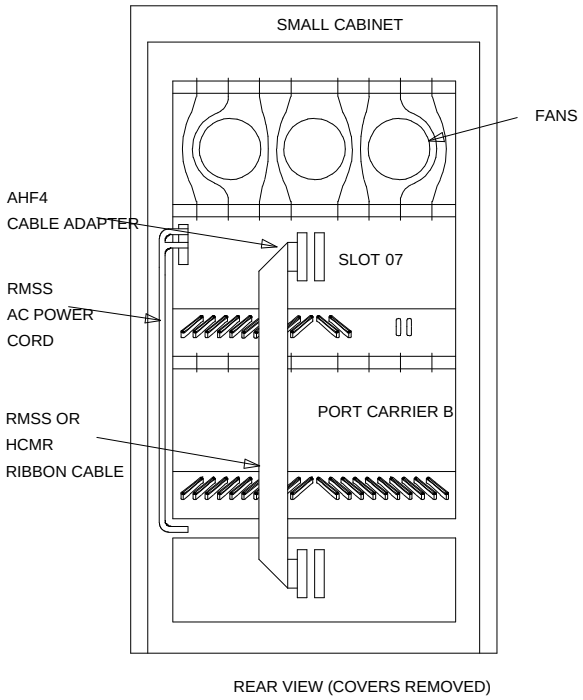

Figure 3-32. R1V3 System Cabinet

Remove Control Carrier A

1. See CAUTION and NOTE. Remove the TDM cable and AHF3 cable adapters from between the ‘‘A’’ and ‘‘B’’ carriers (see Figure 3-33). They will not be reused.

   CAUTION:
   When removing the cable adapters, be careful that none of the short pieces of shrink tubing come off the four corner pins of the pin-field block. Otherwise, when the new equipment is connected, -48 volts could short to ground.

   NOTE:
   Before disconnecting each cable adapter, note its position.

2. Disconnect one end of the eight ground straps (between the ‘‘A’’ and ‘‘B’’ carriers) from the ‘‘A’’ carrier (see Figure 3-34). These straps will be reconnected to the new ‘‘A’’ carrier.
3. Slide the latch up, and disconnect the ‘‘P1’’ (small 9-pin) connector and the ‘‘P2’’ (large 37-pin) connector from the ‘‘A’’ carrier (see Figure 3-35). Move the cables into a position where they will not interfere with removing the carrier.
4. Remove the fan trim plate by pulling straight off.
5. Clean or replace the air filter (403326820) if necessary.
6. In front of carrier, remove the four screws (top two first) holding the ‘‘A’’ carrier to the cabinet frame. Use a long-handle screwdriver or 5/16-inch socket with a 10-inch extension.
7. See CAUTION. Slide the carrier forward 1 to 2 inches; then, from the back, be sure that no cables or wiring harnesses are caught on the cabinet/carrier framework.

   CAUTION:
   Cables and wiring harnesses can be damaged if they catch on the framework and if too much pressure is applied in removing the carrier.

8. Remove the carrier by sliding it out the front of the cabinet.

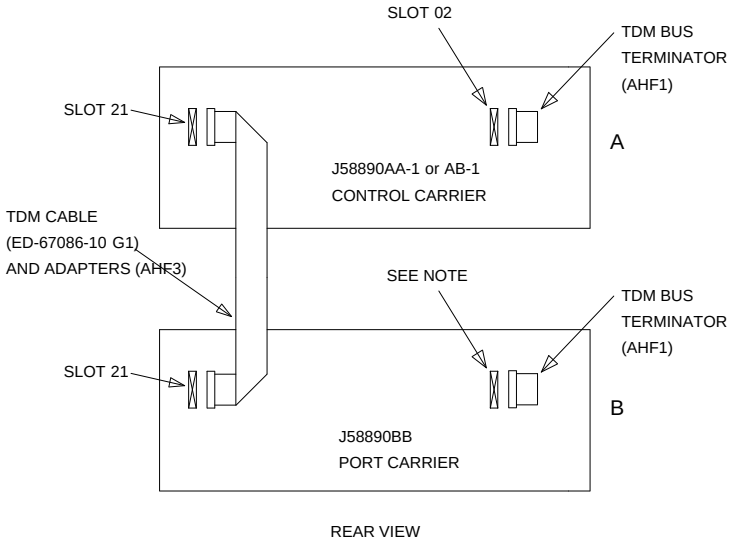

NOTE: ON PORT CARRIER J58890BB-1, DISCONNECT THE TDM TERMINATOR FROM SLOT 02. ON PORT CARRIERS J58890BB-2 AND J58890BB-3, DISCONNECT THE TDM TERMINATOR FROM SLOT 01. IF THE PORT CARRIER HAS BOTH J58890BB-1 AND J58890BB-2 STENCILLED ON IT, TREAT IT AS A J58890BB-1.

Figure 3-33. TDM Connections for Small R1V3 System

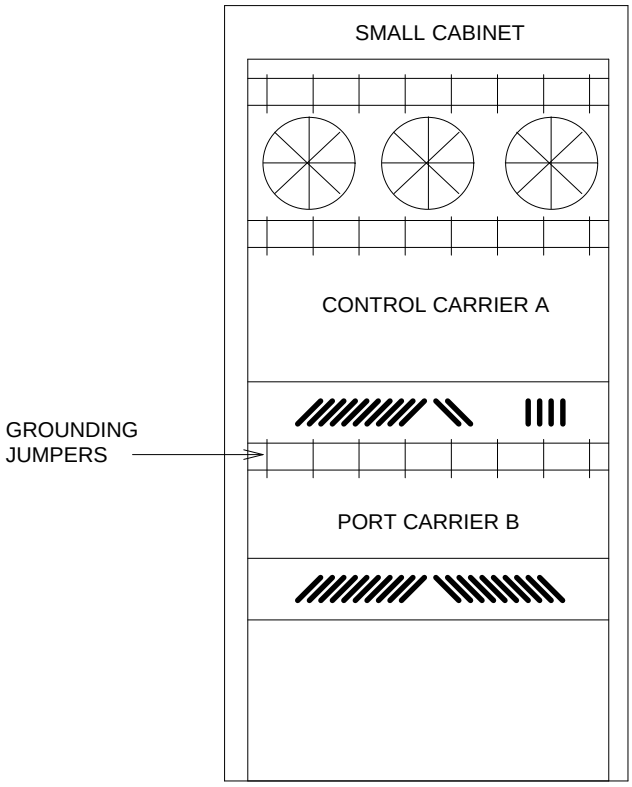

Figure 3-34. Locations of Grounding Jumpers

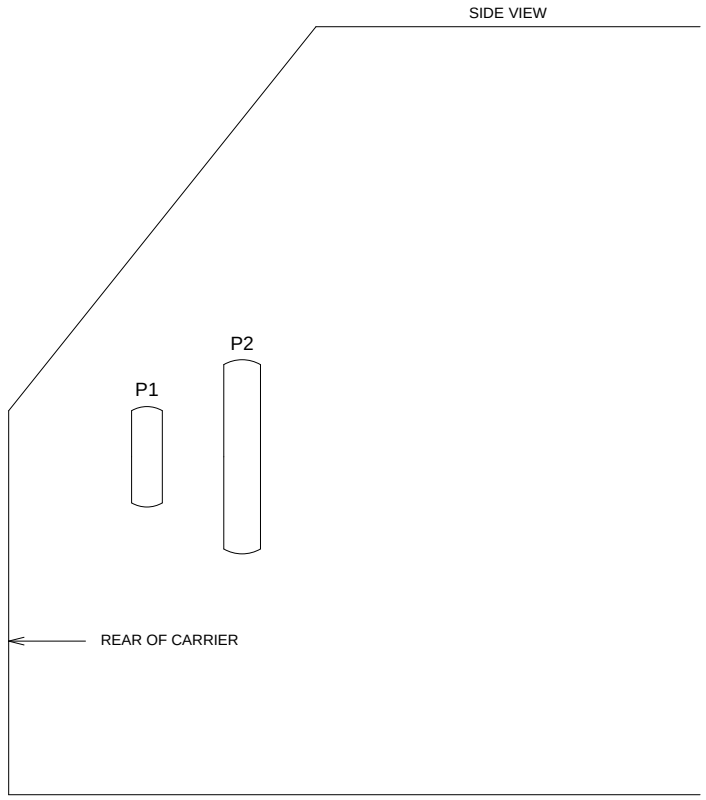

Figure 3-35. Location of P1 and P2 Connectors

Prepare New Expansion Control Carrier A

1. Visually inspect the new carrier for any damage. Verify that the backplane pins are not bent.
2. Place the expansion control carrier on the floor so that the rear of the carrier faces up.
3. Install the CFY1 current limiter (CURL) on the ‘‘A’’ carrier to the pin-field block marked ‘‘CURL.’’ The CURL is inserted with the components on the left side as viewed from the rear.
4. At the rear connector panel, determine which connectors will have a cable attached, and install a 4B cable retainer on each of these connectors.

Install New Expansion Control Carrier A

1. Install the J58890AF-1 expansion control carrier in position ‘‘A’’ by lining up the carrier with the screw holes in the cabinet. Ensure that the power cords are properly placed in the slots at the sides of the carrier.
2. See CAUTION. Fasten the carrier into position with four self-tapping screws saved from the removal of the old carrier.

   CAUTION:
   Carefully realign the threads on the self-tapping screws by turning them clockwise a turn or two before tightening them to avoid stripping the threads out of the framework.

3. Connect the ‘‘P2’’ and “P1’’ (large and small) connectors to the ‘‘A’’ carrier. If necessary, to get enough slack in the cables, cut the tie wrap holding the intercabinet cable to the upright in the area of the carrier being installed. Snap the connector lock into place to ensure that the connection is properly made (see Figure 3-36).
4. Connect the eight ground straps from the ‘‘B’’ carrier to the new ‘‘A’’ carrier (see Figure 3-34). These straps were left connected to the ‘‘B’’ carrier when the old ‘‘A’’ carrier was removed.
5. See NOTE. For an AC-powered expansion control carrier, install the two new carrier-ground straps. One strap connects ground point ‘‘1’’ to the A-carrier frame (on the right side), and the other connects ground point ‘‘8’’ to the A-carrier frame (on the left side).

   NOTE:
   DC-powered carriers do not use these carrier-ground straps.

6. Connect the TDM/LAN bus between the ‘‘A’’ and ‘‘B’’ carriers using the new WP-91716 L6 TDM/LAN cable. The cable is connected to the pin-field block marked ‘‘TDM’’ on the left side of both carriers. (See Figure 3-37.)
7. See CAUTION. At the pin-field blocks marked ‘‘TDM,’’ replace the existing TDM bus terminators on carriers ‘‘A’’ and ‘‘B’’ with the new ZAHF4 TDM/LAN bus terminators. (See Figure 3-33 and Figure 3-37 and Table 3-9.)

CAUTION:
When removing the terminators, be careful that none of the short pieces of shrink tubing come off the four corner pins of the pin-field block. Otherwise, when the new equipment is connected, -48 volts could short to ground.

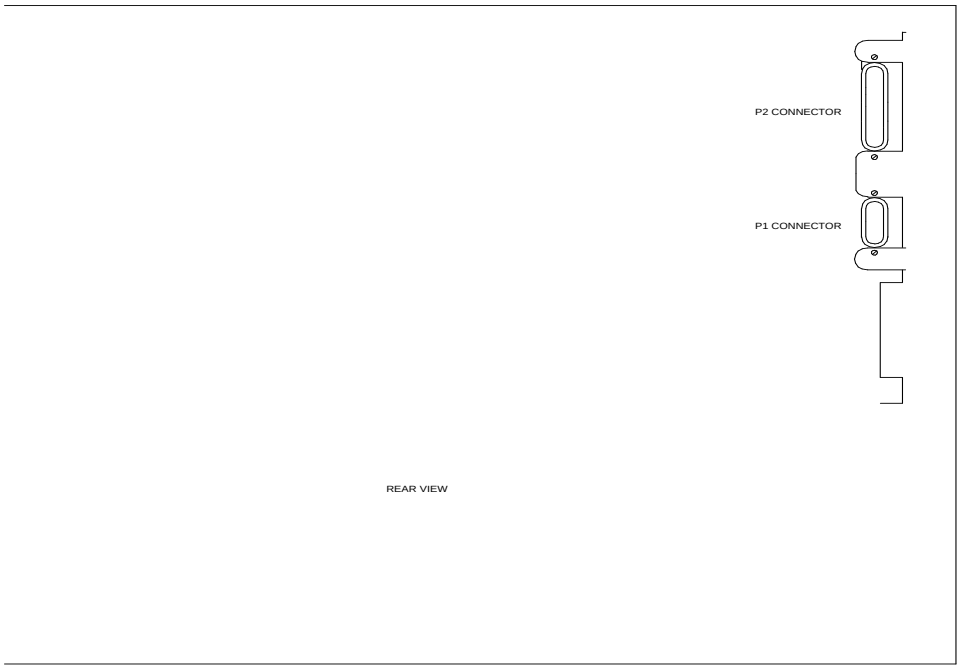

Figure 3-36. Location of P1 and P2 Connectors on DEFINITY Carrier

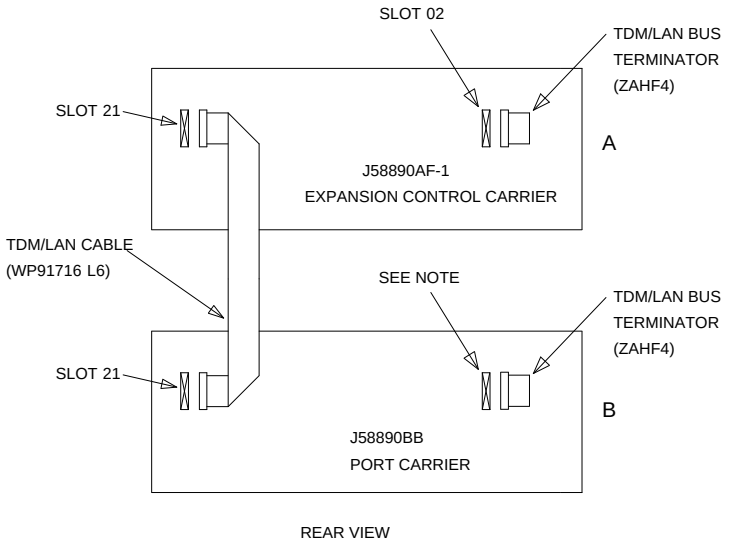

NOTE: ON PORT CARRIER J58890BB-1, CONNECT THE TDM/LAN TERMINATOR TO SLOT 02.
ON PORT CARRIERS J58890BB-2 AND J58890BB-3, CONNECT THE TDM/LAN TERMINATOR TO SLOT 01.
IF THE PORT CARRIER HAS BOTH J58890BB-1 AND J58890BB-2 STENCILLED ON IT, TREAT IT
AS A J58890BB-1.

Figure 3-37. TDM/LAN Connections for G3r V4 EPN

Table 3-9. TDM/LAN Connections

"J" Number	Carrier Type	LHS Slot	RHS Slot
J58890BB-1	Port	21	02
J58890BB-2	Port	21	01
J58890BB-3	Port	21	01
J58890AF	EPN Control "A"	21	02

8. Install the front trim plates; first on the ‘‘A’’ carrier, and then on the ‘‘B’’ carrier.
9. Peel the old decal strip (designation strip) from both trim plates. Then, install the new decal strip at the bottom of each trim panel.
10. Install the new connector-panel decal on the rear connector panel.
11. Connect the ICC cables (H600-204 G1) to the ‘‘A’’ carrier using Table 3-10 and Figure 3-38 at the pin-field block marked ‘‘ICC.’’ Each cable is installed so that the dark red, blue, or purple stripe (depending on the supplier) is on the bottom at both ends.
12. Connect the ICC cables (H600-204 G1) to the ‘‘B’’ carrier using Table 3-10 and Figure 3-39. Although there is no marking on the ‘‘B’’ carrier for the pin-field block used, connect the cables to the pin-field block associated with slot ‘‘03.’’ Orient the cables to coincide with the installation on the ‘‘A’’ carrier, the left half to the left half and the right half to the right half with the dark red, blue, or purple stripe (depending on the supplier) on the bottom.

Table 3-10. Intercarrier Cable Connections

Connect ICC Cables				
	From		**To**	
	Carrier	Pin-Field Block	Carrier	Pin-Field Block
EPN	J58890AF	ICCA	J58890BB	ICCA
		ICCB		ICCB

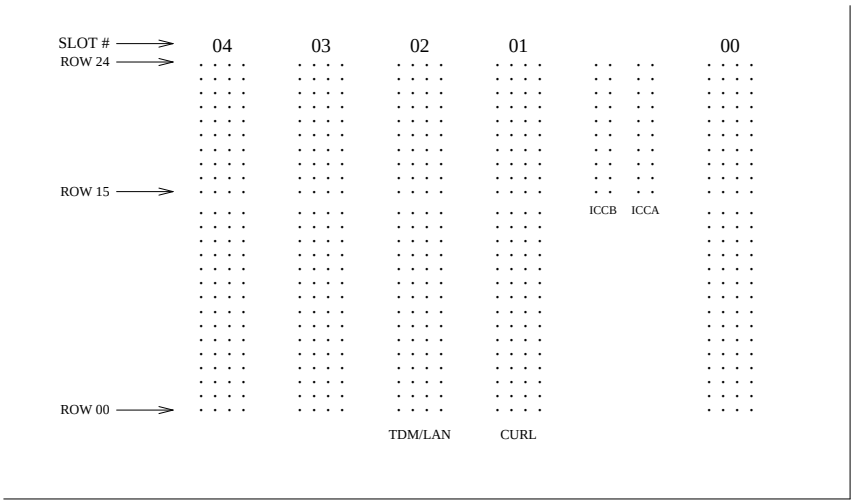

Figure 3-38. ICC Connections for Expansion Control Carrier

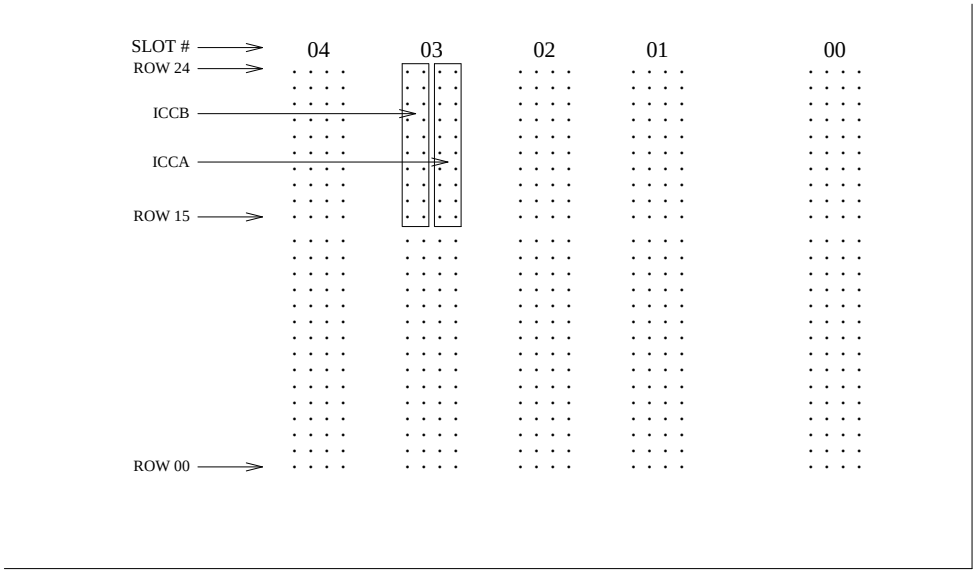

Figure 3-39. ICC Connections for Port Carrier

13. Install the 631-type power units (removed from R1V3) into both the ‘‘A’’ and ‘‘B’’ carriers. Three different pairs of AC power units have been developed. They are the 631AR1 and 631BR1, the 631WA1 and 631WB1, and the 631DA1 and 631DB1. Since power units from the newer pairs are downward compatible with the older ones, power units from different pairs can reside in the same carrier.

    However, do not interchange the physical locations of the units. The 631AR1, 631WA1, or 631DA1 are installed in the left side, while the 631BR1, 631WB1, or 631DB1 are installed in the right side (see Figure 3-40).

14. If the expansion control carrier contains a 631BR1 or 631WB1 power unit, install the previously removed TN736 power unit in port slots ‘‘18’’ and ‘‘19’’ of the carrier (adjacent to the 631BR1 or 631WB1). If the system is equipped for neon message waiting, a TN752 or TN755 power unit must be used.

    NOTE:
    A TN736 is not required when a 631DB1 power unit is used in a J58890AF-1 expansion control carrier or in a J58890BB-2 or -3 port carrier. It is always required in the J58890BB-1 port carrier, regardless of which 631 power unit is provided. Use a TN752 or TN755 if the system is equipped with neon message waiting.

15. Connect the power cords to the power units. The power cords are the white cables equipped with plugs that are run through the slots in the front of each carrier (see Figure 3-41).

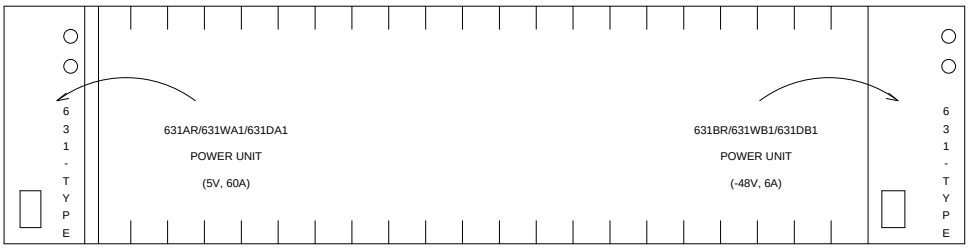

Figure 3-40. Locations of Power Units

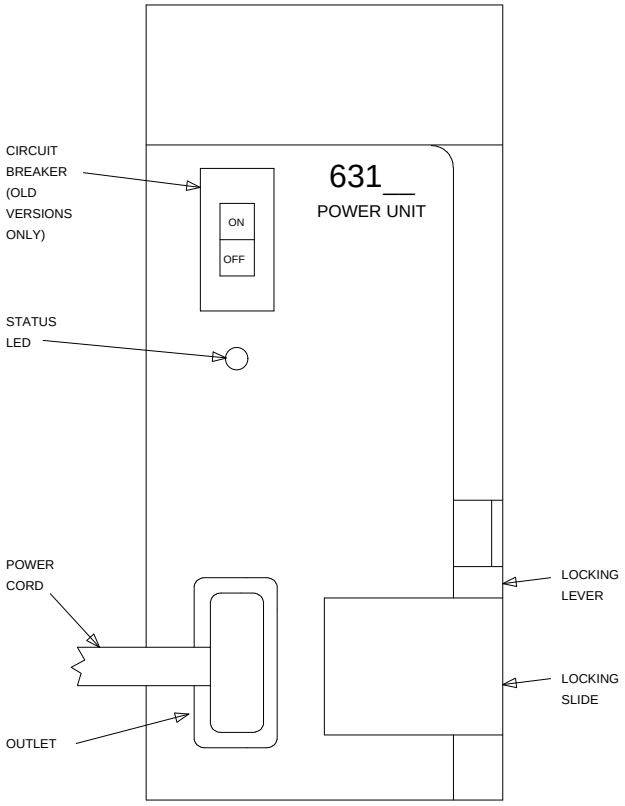

Figure 3-41. 631-Type Power Unit

Test the CURL

1. Plug the cabinet power cord into the appropriate receptacle.
2. At the power-distribution unit, set the main circuit breaker to ON.
3. Unplug the power cord from the power unit ‘‘B’’ (right-hand side) in the ‘‘A’’ carrier.
4. Verify the fans continue running. If they are not running, check the installation of the CURL.
5. Reconnect the power cord to the power unit in the ‘‘A’’ carrier, then unplug the power cord from power unit ‘‘B’’ (right-hand side) in the ‘‘B’’ carrier.
6. Verify the fans continue running. If they are not running, check the installation of the CURL.
7. Reconnect the power cord to the power unit in the ‘‘B’’ carrier.
8. At the power-distribution unit, set the main circuit breaker to OFF.

Install Circuit Packs

1. See WARNING. Install the new G3r V4 control circuit packs into EPN carriers ‘‘A’’ and ‘‘B.’’ Use the following figure, the new decal, and the annotated ‘‘list configuration all’’ (provided with the G3r V4 tape) as a guide.

   WARNING:
   Before inserting or removing a circuit pack from a cabinet, put on a wrist strap and attach its plug or clip to the cabinet’s frame.

2. See preceding WARNING and following WARNING and NOTE. Install the previously removed port circuit packs into the ‘‘A’’ carrier using the decal and the annotated ‘‘list configuration all’’ (provided with the G3r V4 tape) as a guide.

   WARNING:
   These installed port circuit packs must conform to the usable vintage requirements for a G3r V4 system (see Reference Guide for Circuit-Pack Vintages and Change Notices).

   NOTE:
   Since the new G3r V4 expansion control carrier has seven to eleven more port slots than the removed control carrier, there should not be a need to move and retranslate these circuit packs.

   If a port circuit pack was located in slot ‘‘01’’ of control carrier ‘‘A,’’ the STS software upgrade retranslated this circuit pack to occupy an empty port slot in the new expansion control carrier.

3. See preceding WARNINGS. Install the port circuit packs, previously removed, into the ‘‘B’’ carrier. Use the decal and the upgrade configuration document as a guide.
4. Verify the associated PPN is equipped with a TN570.

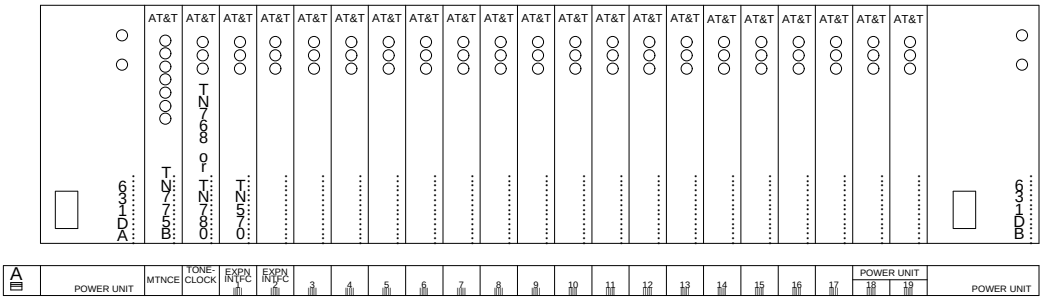

Figure 3-42. Circuit-Pack Locations in G3r V4 Expansion Control Carrier

Interconnect Port Networks

See NOTES. Fiber-optic cabling terminated to 9823A lightwave transceivers can interconnect port networks (PNs) located up to 4,900 feet (about 9/10 mile) apart. Whereas, fiber-optic cabling terminated to 9823B lightwave transceivers can interconnect port networks located up to 25,000 feet (about 4.7 miles) apart. When available and whenever the desired distance between the port networks is less than 25,000 feet, fiber is the preferred medium for interconnecting port networks, providing significantly higher-bandwidth connectivity than DS1C remoting.

NOTE:
As always, these distance limitations are approximate measurements of the *actual* fiber right-of-way (not of the shortest linear distance) between the two endpoints.

NOTE:
It is important to label every cable that you install. For details, refer to the section, *Labels for Fiber-Optic Cables*, in Appendix E of the installation manual.

NOTE:
Throughout these procedures, remember to keep track of which fiber is attached to which connector on each lightwave transceiver. This section provides figures offering the suggested way of making these connections.

The connectors on the lightwave transceivers are labeled either “TX” (transmit) or “RX” (receive), while the fibers attached to each connector are numbered either ‘‘1’’ or ‘‘2.’’ A viable fiber connection is only made when both fibers in each cable (that is, ‘‘1’’ and ‘‘2’’) route from the “TX” connector of a port network to the “RX” connector of its adjacent port network. For an example, refer to Figure 3-44.

NOTE:
For implementation details, refer to the ‘‘Fiber Link Administration’’ sections of *DEFINITY Communications System Generic 3 V4 Implementation*, 555-230-655.

Collocated Port Networks

When a critical-reliability PPN and EPN are collocated, two fiber-optic cables (FL2P-P-XX) and four lightwave transceivers (9823-type) are required for EPN connections.

NOTE:
For the FL2P-P-XX fiber-optic cable, the -XX suffix represents the length of the cable in feet. Based on floor-plan considerations, the length of these cables may vary. However, 20-foot cables are normally adequate for a G3r V4 with two port networks.

For collocated cabinets, the fiber-optic cables should be routed directly from the PPN to the EPN cabinet. Since, for this upgrade, a ''DEFINITY style'' PPN cabinet is next to a small EPN cabinet, the preferred routing is to run the cables down the cable tray and out the bottom of the PPN cabinet. The cables are then run to the EPN cabinet and up the outside of the rear panels to the desired carrier level.

Fiber-Remoted Port Networks

When a critical-reliability PPN and EPN are remotely separated with fiber, four fiber-optic cables (FL2P-P-XX), four lightwave transceivers (9823-type), and two lightwave-interface units (provided by the PSC) are required.

For remote cabinets, the cables should be routed down the cable tray and out the bottom of the cabinet to the cross-connect field where the lightwave-interface units are located.

DS1C-Remoted Port Networks

When a critical-reliability PPN and EPN are remotely separated with DS1 facilities, this arrangement requires:

- Four DS1C circuit packs (TN574)
- Four DS1C-to-EI cables (846448637 and/or 846448645)
- Four H-600-348 cables
- Two, four, six, or eight pairs of channel service units (CSUs)
- Two, four, six, or eight pairs of wall-field cables (provided with the CSUs)

In any case, use cable ties to secure the cables against the walls of the cable tray at the cable-tie positions built into the trays.

One Collocated Expansion Port Network

1. Behind port carrier C of the PPN cabinet (see Figure 3-43 and Figure 3-44):
   - Install a 9823-type lightwave transceiver on the connector at slot 1C02.
   - Connect one end of the fiber-optic cable to the 9823-type lightwave transceiver at slot 1C02.
   - Route the fiber-optic cable from the 9823-type lightwave transceiver to the cabinet's cable tray and downward out of the cabinet to the EPN.
2. Behind port carrier B of the EPN cabinet:
   - Install the same kind (either 9823-A or 9823-B) of lightwave transceiver on cable connector at slot 2B02.
   - Connect the fiber-optic cable, coming from port carrier C of the PPN cabinet, to the 9823-type lightwave transceiver at slot 2B02.
   - Delicately attach the fiber-optic cable (with cable ties) to the rear panels of the EPN cabinet.
   - Coil up the surplus length of fiber-optic cable, and place the coil either in the cable manager or on the bottom shelf (holding the power supply) of the PPN cabinet.
3. Behind port carrier D of the PPN cabinet:
   - Install a 9823-type lightwave transceiver on the connector at slot 1D02.
   - Connect one end of a fiber-optic cable to the 9823-type lightwave transceiver at slot 1D02.
   - Route the fiber-optic cable from the 9823-type lightwave transceiver to the cabinet's cable tray and downward out of the cabinet to the EPN.
4. Behind control carrier A of the EPN cabinet:
   - Install the same kind (either 9823-A or 9823-B) of lightwave transceiver on cable connector at slot 2A01.
   - Connect the fiber-optic cable, coming from port carrier D of the PPN cabinet, to the 9823-type lightwave transceiver at slot 2A01.
   - Delicately attach the fiber-optic cable (with cable ties) to the rear panels of the EPN cabinet.
   - Coil up the surplus length of fiber-optic cable, and place the coil either in the cable manager or on the bottom shelf (holding the power supply) of the PPN cabinet.

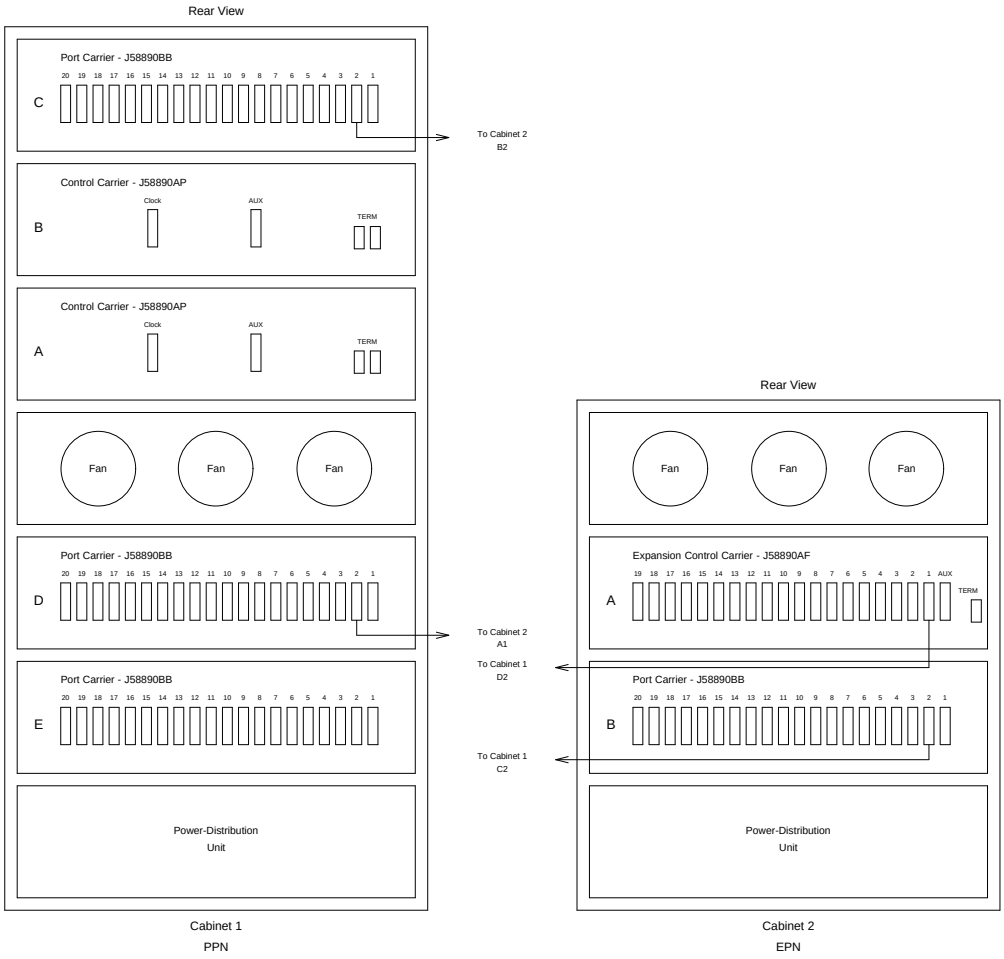

Figure 3-43. Critical-Reliability G3r V4 with Two Port Networks

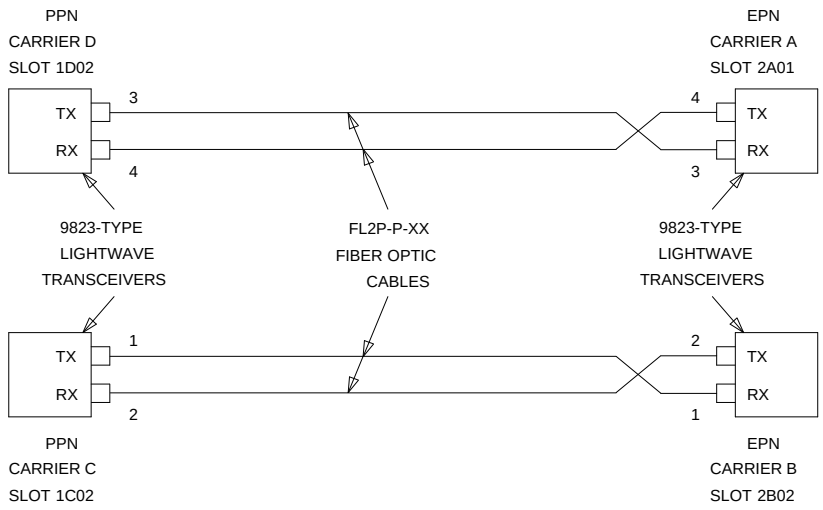

Figure 3-44. With Critical Reliability

One Fiber-Remoted Expansion Port Network

1. Behind port carrier C of the PPN cabinet (see Figure 3-43 and Figure 3-45):
   - Install a 9823-type lightwave transceiver on the connector at slot 1C02.
   - Connect one end of the fiber-optic cable to the 9823-type lightwave transceiver at slot 1C02.
   - Route the fiber-optic cable from the 9823-type lightwave transceiver to the cabinet cable tray and downward out of the cabinet through the cable manager to the PDS cross-connect facility.
   - At the PDS cross-connect facility, connect the fiber-optic cable to the lightwave-interface unit provided.
   - Delicately attach the fiber-optic cable (with cable ties) to the wall of the cable tray at the built-in cable-tie positions.
2. Behind port carrier B of the EPN cabinet:
   - Install the same kind (either 9823-A or 9823-B) of lightwave transceiver on cable connector at slot 2B02.
   - Connect one end of a fiber-optic cable to the 9823-type lightwave transceiver at slot 2B02.
   - Route the fiber-optic cable from the 9823-type lightwave transceiver to the cabinet cable tray and downward out of the cabinet through the cable manager to the PDS cross-connect facility.
   - At the PDS cross-connect facility, connect the fiber-optic cable to the lightwave-interface unit provided.
   - Delicately attach the fiber-optic cable (with cable ties) to the rear panels of the EPN cabinet.

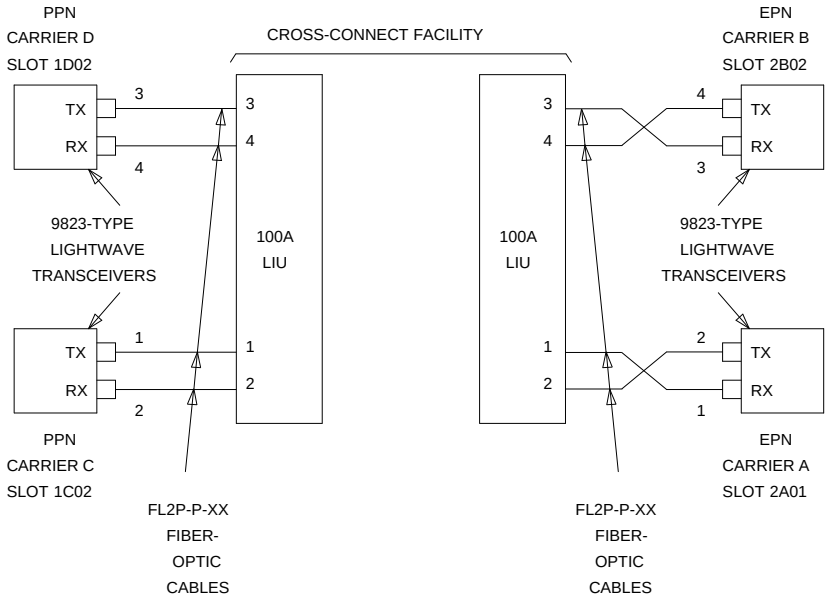

Figure 3-45. With Critical Reliability

3. Behind port carrier D of the PPN cabinet:
   - Install a 9823-type lightwave transceiver on the connector at slot 1D02.
   - Connect one end of a fiber-optic cable to the 9823-type lightwave transceiver at slot 1D02.
   - Route the fiber-optic cable from the 9823-type lightwave transceiver to the cabinet cable tray and downward out of the cabinet through the cable manager to the PDS cross-connect facility.
   - At the PDS cross-connect facility, connect the fiber-optic cable to the lightwave-interface unit provided.
   - Delicately attach the fiber-optic cable (with cable ties) to the wall of the cable tray at the built-in cable-tie positions.
4. Behind control carrier A of the EPN cabinet:
   - Install the same kind (either 9823-A or 9823-B) of lightwave transceiver on cable connector at slot 2A01.
   - Connect one end of a fiber-optic cable to the 9823-type lightwave transceiver at slot 2A01.
   - Route the fiber-optic cable from the 9823-type lightwave transceiver to the cabinet cable tray and downward out of the cabinet through the cable manager to the PDS cross-connect facility.
   - At the PDS cross-connect facility, connect the fiber-optic cable to the lightwave-interface unit provided.
   - Delicately attach the fiber-optic cable (with cable ties) to the rear panels of the EPN cabinet.

DS1C-Remoted Cabinets

See NOTES. Digital Services 1 (DS1) facilities and associated equipment-room hardware and cabling can interconnect two port networks (PNs) located up to 100 miles apart. Although DS1 remoting always serves as a lower-bandwidth alternative to fiber remoting, DS1 remoting is especially attractive when:

- Fiber-optic cabling is unavailable to the remote site
- When the desired distance between the port networks exceeds the practical fiber limit of 25,000 feet (about 4.7 miles)
- Digital Services facilities, with enough bandwidth for interconnection, already exist between the two port networks

NOTE:
As always, these distance limitations are approximate measurements of the *actual* fiber or copper right-of-way (not of the shortest linear distance) between the two endpoints.

NOTE:
The 100-mile limit for DS1 remoting is the maximum distance between *any* two port networks in a G3r V4 system with either direct or switched port-network connections.

For example, in a *directly connected* system, a single EPN can be remoted up to 100 miles. This is because the length of the *direct* fiber connection from any port network in the local equipment room to the remote EPN is 100 miles.

However, if more than one EPN is remoted in a directly connected system, the 100-mile limit applies to any two port networks. Assuming straight cable runs, suppose that a customer wants to remote one EPN 80 miles due east and another EPN due north of the local PPN. This arrangement can only be accommodated if the second EPN resides no more than 60 miles north of the PPN. This is because the direct fiber distance between the two EPNs is also limited to 100 miles.

As another example, in *switch-connected* system with numerous port networks, one EPN might be remoted 75 miles from the switch node. If this were the case, then the maximum distance that any other EPN could be remoted would be 25 miles.

Digital public-network tie-trunk facilities provide the end-to end connectivity between the port networks. For either type of port network (PPN or EPN), a TN574 DS1 Converter (DS1C) circuit pack serves as the port-network interface to the DS1 facilities. As a PPN interface, a TN574 DS1C can reside in either:

- A port carrier (in any port slot)
- A switch-node carrier (in port slot ‘‘1’’ or ‘‘21’’)

As an EPN interface, a TN574 DS1C can reside in an expansion control carrier (in any port slot).

DS1 Cabling within the Local Port Networks. See NOTE. Use the running list that accompanies the upgrade equipment to determine which cable should be connected where. The following paragraphs only provide conceptual information about wiring a DS1C interface either to an expansion interface or to a switch-node interface, not step-by-step procedures for wiring a specific G3r V4 system.

NOTE:
It is important to label every cable that you install. For details, refer to the section, *Labels for Fiber-Optic Cables*, in Appendix E of the installation manual.

See NOTE. As shown in Figure 3-46, a cable connects each DS1C either to the appropriate TN570 expansion interface (for a direct connection to another port network) or to the appropriate TN573 SN Interface (for a switched connection to another port network).

NOTE:
For the purposes of an R1V3 to G3r V4 upgrade, this cable will usually connect to a TN570 expansion interface (already installed) for a direct connection between the new PPN and the upgraded EPN.

On the DS1C side, a 4C retainer binds this shielded cable to the DS1C port connector. On the EI/SNI side, a 4B retainer binds the cable to the EI/SNI port connector. The DS1C-to-EI/SNI cable also provides a piggy-back connector enabling subsequent access to the public network. Table 3-11 lists the cable numbers and lengths for the possible connections.

Table 3-11. Numbers and Lengths of DS1C-to-EI/SNI Cables

Connection Type	Comcode Number	Length
Within same carrier	846448637	1 foot
Between two carriers in same port network	846448645	5.5 feet
Between two carriers in adjacent networks	846448652, and one 846885259 bracket	1 foot (used with two 9823As, & one 20-foot fiber-optic cable)

DS1 Cabling to the Public Network. See NOTE. Use the running list that accompanies the upgrade equipment to determine which cable should be connected where. The following paragraphs only provide conceptual information about wiring a DS1C interface to a wall-field block, not step-by-step procedures for wiring a specific G3r V4 system.

NOTE:
It is important to label every cable that you install. For details, refer to the section, *Labels for Fiber-Optic Cables*, in Appendix E of the installation manual.

Figure 3-46 also shows the cabling between various port networks and the cross-connect field where the public network is accessed. If already connected to either an expansion or switch-node interface, a DS1C circuit pack already resides either in an EPN expansion control carrier or in a PPN port carrier or switch-node carrier.

Depending on the traffic requirements between the two port networks, a 25-foot H600-348 cable extends from the piggy-back connector (on each DS1C-to-EI/SNI cable) to from one to four channel service units (CSUs). [This cable branches to four 15-pin subminiature D-type connectors (labeled ‘‘01’’ to ‘‘04’’) to make the CSU connections.] Then, in turn, the CSU(s) are connected to the wall-field block (corresponding to the equipment location of the DS1C) at port connections ‘‘8,’’ ‘‘7,’’ ‘‘6,’’ and ‘‘5’’ (in descending order).

Neglecting overhead, this wiring arrangement can provide PN-to-PN communication at the bandwidth of up to four DS1 spans (1.544 Mbps each). Between each port network’s wall field, the port networks communicate across leased lines in the public network.

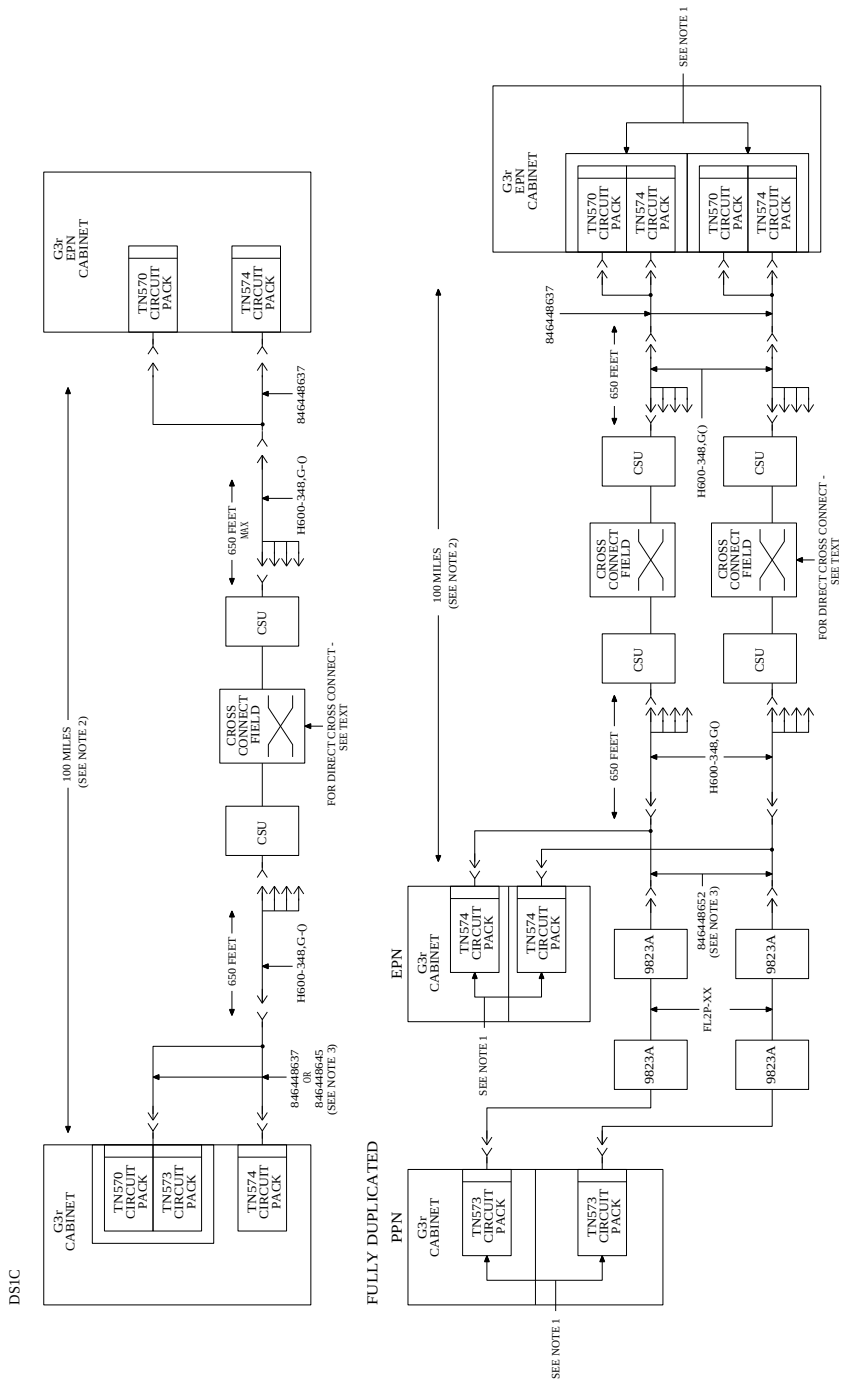

Figure 3-46. DS1 Connectivity between Remote PNs

Verify Usable Circuit-Pack Vintages

Verify that every R1V3 circuit pack reused in the upgrade conforms to the usable vintage requirements for a G3r V4 system (see Reference Guide for Circuit-Pack Vintages and Change Notices).

Install System Access Ports

As a prerequisite for connecting various endpoints that use EIA interfaces to the G3r V4 system, install the up to eight loop-around connections for Mode 2-to-Mode 3 (and vice versa) data conversion.

From the *outgoing* perspective of the system communicating with an EIA endpoint, these loop-around connections convert Mode 3 data (circuit-switched packet data, with undefined bit rates and packet specifications) to Mode 2 data (low-speed, usually asynchronous, data at rates of 300 to 19,200 bps) by:

- Accepting Mode 3 data off the LAN bus (from the SPE) at a TN553 Packet Data Line circuit pack, where Mode 3-to-Mode 2 conversion is done
- Routing the converted data through the cross-connect field and back to a TN726B Data Line where the equivalent Mode 2 data can access the TDM bus, for subsequent routing to an EIA endpoint

The endpoints that use these EIA interfaces and, therefore, require the Mode 2-to-Mode 3 conversion include:

- DEFINITY Communications System Generic 3 Management Applications (G3-MA)
- Remote DEFINITY Communications System Generic 3 Management Terminal (G3-MT)
- Basic Call Management System (BCMS) terminal
- Call Detail Recording Unit (CDRU)/Centralized Attendant Service Plus (CAS+)
- Property Management System (PMS)
- Printers

The following figures show this loop-around configuration and how the B25A cables are cross-connected.

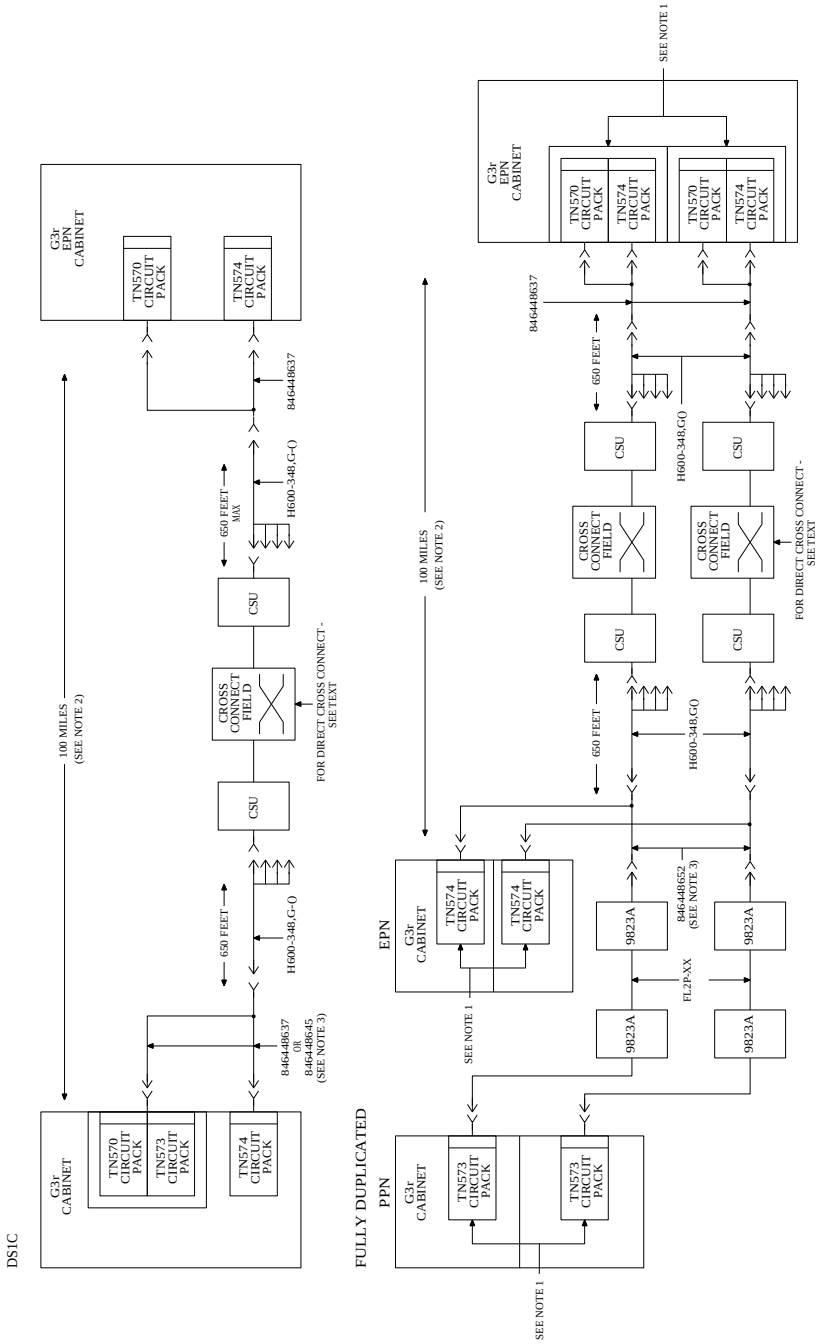

Figure 3-47. Connections: CDRU/CAS+, PMS, BCMS, Printers, G3-MA/MT

Pinouts for the TN553 and TN726B circuit packs shown cross-connected in the preceding figure are given in the table below.

Pinouts

TN553 (12 Ports)

1	26	
2	27	1
3	28	
4	29	2
5	30	
6	31	3
7	32	
8	33	4
9	34	
10	35	5
11	36	
12	37	6
13	38	
14	39	7
15	40	
16	41	8
17	42	
18	43	9
19	44	
20	45	10
21	46	
22	47	11
23	48	
24	49	12
25	50	G

TN726B (8 Ports)

1	26	Blank
2	27	
3	28	1
4	29	Blank
5	30	
6	31	2
7	32	Blank
8	33	
9	34	3
10	35	Blank
11	36	
12	37	4
13	38	Blank
14	39	
15	40	5
16	41	Blank
17	42	
18	43	6
19	44	Blank
20	45	
21	46	7
22	47	Blank
23	48	
24	49	8
25	50	Blank

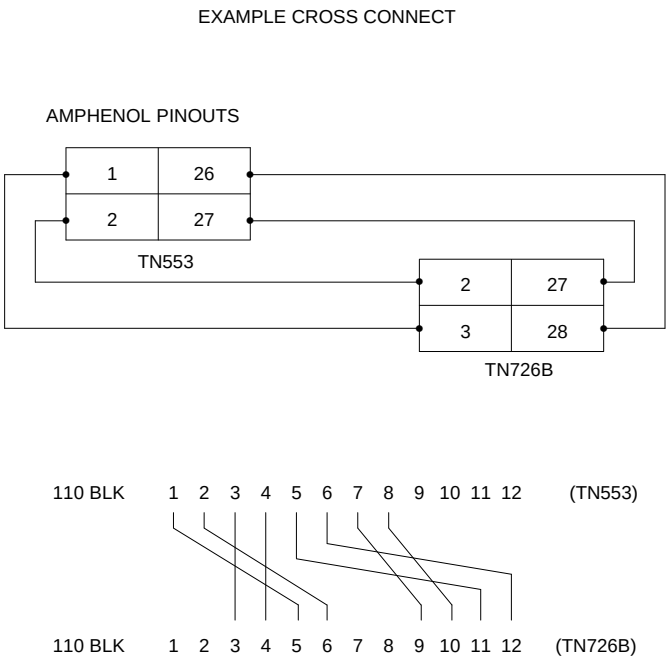

Figure 3-48. Example of Cross Connect between TN553 and TN726B

Reseat DEFINITY AUDIX System

See WARNING. If a DEFINITY AUDIX System resides in the system, reseat the AUDIX assembly to its backplane connectors.

WARNING:
Before inserting or removing a circuit pack from a cabinet, put on a wrist strap and attach its plug or clip to the cabinet's frame.

Remove Power-Failure Ground Strap

Remove the ground strap from the power-failure transfer unit.

Reboot the System

1. Connect the G3-MT to the connector labeled ''TERMINAL'' behind PPN control carrier ''A,'' or install the G3-MA according to the ''Set Up G3-MA'' chapter of *DEFINITY Communications System Generic 3 Management Applications — Operations*, 585-229-202.
2. Verify that the new G3r V4 system tape is inserted in the PPN cabinet.
3. At the EPN power-distribution unit, set the main circuit breaker to ON.
4. At the PPN power-distribution unit, set the main circuit breaker to ON.
5. The system now goes through the reset level 4 rebooting process, loading blank translations from the *disk* (not the new tape). Rebooting requires 5 to 11 minutes.
6. Enter **`reset system 4 tape`**. Press (RETURN). This command instructs the system to go through the reset level 4 rebooting process, loading the upgraded STS translations from the new *tape*. Rebooting requires 5 to 11 minutes.

   Refer to ''Initialization and Recovery'' and ''LED Interpretation'' chapters in *DEFINITY Communications System Generic 3r V4 Maintenance*, 555-230-105, Issue 3, for circuit-pack LED indications and screen displays that occur during system reboot.
7. Log in at the `login:` prompt on the G3-MT or G3-MA, and set the time to ensure that the system is booted properly.
8. Enter **`status spe`**, and press (RETURN) to verify that the standby SPE is refreshed and that the standby disk is in service.
9. Enter **`restore disk both full`**. Press (RETURN). This command instructs the system to write the upgraded STS translation information from memory to the disks.
10. Enter **`reset system 4`**. Press (RETURN). This command instructs the system to go through the reset level 4 rebooting process, loading the upgraded STS translations from the *disk*. Rebooting requires 5 to 11 minutes.

NOTE:
Certain forms have changed for G3r V4. Upgraded R1V3 translations may appear on a different form, fields may have shifted within a form, and/or the names assigned to particular fields may have changed. Refer to Table 3-1 and to *DEFINITY Communications System Generic 3r Transition Reference*, 555-230-636, and *DEFINITY Communications System Generic 3 V4 — Implementation*, 555-230-655, and make the necessary changes.

Relabel Wall Field

If not done during the installation of new PPN, relabel the wall field with the new port-network number of the upgraded G3r V4 EPN. (For an upgrade of an R1V3 system, the STS software upgrade assigned port-network number ‘‘2’’ to the upgraded EPN.)

Close EPN Cabinet and Reconnect Cables

1. At the EPN power-distribution unit, set the main circuit breaker to OFF.

   NOTE:
   Powering down the EPN without powering down the PPN will set off alarms. However, these alarms should clear after power is restored to the EPN.

2. Temporarily disconnect the lightwave transceivers and fiber-optic cables, already labeled, from the appropriate carriers.
3. Replace the back panels previously removed.
4. At the EPN cabinet, reconnect the lightwave transceivers, fiber-optic cables, and the connector cables associated with the carrier being replaced.
5. Install the front door on the EPN cabinet if previously removed.
6. Install a DEFINITY label on the EPN cabinet.

Power Up the EPN Cabinet

1. At the EPN power-distribution unit, set the main circuit breaker to ON.

   After about 40 seconds, EPN power and PPN/EPN communications return.

2. After power returns to the EPN and all trouble is cleared, verify that the EMERGENCY TRANSFER CONTROL switch is set to AUTO. This restores the system to the normal mode.

Retranslate Port Circuits

If port circuit packs in the R1V3 control carrier were relocated in order to put:

- A critical port circuit pack, requiring longer nominal battery holdover (e.g., a DS1 or an Announcement circuit pack), in a port slot
- A TN736, TN752, or TN755 power supply in port slots ‘‘18’’ and ‘‘19’’
- A TN570 Expansion Interface in port slot ‘‘1’’
- A TN570 Expansion Interface in port slot ‘‘2’’ (for a simultaneous EPN addition)

of the new expansion control carrier, verify that they were retranslated during the off-site software upgrade. If not, they must be retranslated now. Refer to *DEFINITY Communications System Generic 3 V4 Implementation*, 555-230-655, for instructions on performing the retranslations.

Rerecord Announcements

The off-site STS translation upgrade did not preserve the contents of recorded announcements. Therefore, if a TN750 Announcement circuit pack resides in the system, any announcements that were stored on the circuit pack must be rerecorded.

Run Acceptance Tests

Refer to Chapter 11 of *DEFINITY Communications System Generic 1 and Generic 3 Installation and Test*, 555-230-104, Issue 5, and perform the appropriate tests.

Register System as G3r V4

Get the serial number of the new G3r V4 PPN, and call the INADS Database Administrator at the Technical Service Center (1-800-248-1111) to register the upgraded system as a G3r V4.

Return Replaced System 75 Equipment

The System 75 equipment replaced, during the upgrade to G3r V4, should be returned to AT&T according to the requirements outlined in:

BCS/Material Logistics, MSL/Attended Stocking Locations

Methods and Procedures for Basic Material Returns

The replaced System 75 equipment includes:

- System 75 control carrier and control circuit packs
- System 75 tone-clock circuit pack
- RMSS or HCMR tape drive
- R1V3 tape cartridges
- TDM cables (ED-67086-10 G1) and cable adapters (AHF3)
- TDM bus terminators (AHF1)

Multicarrier G1 or G3i to G3r V4

4

This chapter provides the information necessary to upgrade a DEFINITY® G1 or G3i system to a DEFINITY G3r V4 system with multicarrier EPN(s). The hardware and software involved in the upgrades and the upgrade procedures are also provided.

CAUTION:
Be careful to find the right chapter for your upgrade. Using the software- and sometimes the hardware-upgrade PEC on the customer's order, refer to Table 1 in "About This Document" for the correct chapter.

The following processes are required for a G1 or G3i to G3r V4 upgrade:

- Upgrading the hardware

  This involves adding a new multicarrier PPN cabinet, replacing the first control carrier with an expansion control carrier, replacing a duplicated control carrier with a port carrier, and replacing and adding circuit packs

- Replacing the software tape
- Upgrading the software

  This involves saving, loading, and (when necessary) reentering system translations (see Table 4-1 and Table 4-2).

- Testing the upgraded system to verify proper operation

G3r V4 features and functions are listed in the *DEFINITY Communications System Generic 3 Feature Description*, 555-230-204. *DEFINITY Communication System Generic 3 V4 Implementation*, 555-230-655, provides the commands, procedures, and forms required to initialize and administer the G3r V4.

Considerations

Service Interruption

The upgrade process requires a service interruption. This service interruption must be closely coordinated with the customer and the local account team.

Communication between Equipment Rooms

For an upgrade where some of the equipment resides at a remote location, the upgrade activity will be much easier if temporary communications are established between the equipment rooms.

Contact Network Technicians

The technician for each public and private network accessed by the switch must be contacted before the upgrade begins. Otherwise, if these technicians are not aware of the service interruption caused by the upgrade, it is possible that network-access trunk facilities will be busied out at the far end.

Relocation of Port Circuit Packs

With the possible exception of a port circuit pack in slot ‘‘01’’ of carrier ‘‘A’’ that must be moved for a TN570 Expansion Interface, a G1 or G3i upgrade to G3r V4 *does not* cause port circuit packs, from the G1 or G3i control carrier, to be moved and manually retranslated. This is because a G1 or G3i PPN is always upgraded to an EPN. So, during the cabinet upgrade to a G3r V4 EPN, a G3r V4 expansion control carrier (with 18 available port slots) always replaces the G1 or G3i control carrier (with 9 available port slots), providing a net gain of 9 port slots.

See NOTE. If a port circuit pack does reside in slot ‘‘01’’ of control carrier ‘‘A,’’ the STS software upgrade will retranslate this circuit pack to occupy an empty port slot in the new expansion control carrier.

For an upgrade to a critical-reliability G3r V4, if a port circuit pack resides in slot ‘‘02’’ of port carrier ‘‘B,’’ the STS software upgrade will retranslate this circuit pack to occupy another empty port slot in the new expansion control carrier.

Also, to provide maximum holdover for a TN750/B Announcement circuit pack that did not reside in the control carrier of the R1V3 system, the STS software upgrade will relocate this circuit pack to occupy another empty port slot in the new expansion control carrier.

Also, to ensure reliable DS1 timing in the upgraded G3r V4 system, the STS software upgrade will relocate the DS1 circuit packs serving as the primary and secondary timing sources to occupy two empty port slots in the new multicarrier PPN.

Finally, when adjuncts are connected to an upgraded G3r V4, STS will locate any new interface circuit packs (including TN577 Packet Gateway, TN553 Packet Data, and TN726B Data Line) in the first available slots of the first PPN port carrier.

NOTE:
To find out where STS relocated these circuit packs, refer to the annotated "list configuration all" that STS provided with the new G3r V4 tape.

Usable Circuit-Pack Vintages

Every circuit pack used in the upgraded G3r V4 system must conform to the minimum usable vintage requirements for G3r V4. Those circuit packs shipped in the new G3r V4 PPN or shipped loose with the new EPN equipment should always meet the usable vintage specifications. In addition, at a presale site inspection, the Quality Protection Plan Change Notice (QPPCN) process must check the vintages of every G1 or G3i circuit pack (including any CFY1 current limiters) that will be reused in the upgraded G3r V4 and, if necessary, replace those circuit packs that have unusable vintages. Refer to *Technical Monthly*, Reference Guide for Circuit-Pack Vintages and Change Notices, for current information about usable vintages in a G3r V4 system.

Site Inspections

For the purposes of a G3r V4 upgrade, most G1 and G3i systems are already equipped with the correct TDM/LAN cables (WP-91716 L6 and L7) and with the correct lightwave transceivers (9823-A or -B). However, some G1 and G3i systems contain earlier versions of these components, and (based on a QPPCN site inspection) these older components must be replaced.

The two earlier versions of the TDM/LAN cable included the WP-91112 (L1 and L2) and the WP-91716 (L1 and L2). Both of these versions, had white labels. In contrast, the correct cables (WP-91716 L6 and L7) have blue labels. If a QPPCN site inspection reveals that the older cables reside in the system, the older cables are replaced under the QPPCN process.

See NOTE. The earlier versions of lightwave transceivers included the 4-series transceivers (that is, 4A through 4F). These transceivers supported fiber connections up to 7,000 feet apart; whereas the 9823-A supports connections up to 5,000 feet, and the 9823-B supports connections up to 25,000 feet. If the site inspection reveals that the older transceivers reside in the system, the correct transceivers are ordered and shipped according to a separate PEC.

NOTE:
The 9823-A transceiver is *not* a direct replacement for the 4-series transceiver (since a pair of 9823-A transceivers *cannot* replace a pair of 4-series transceivers supporting a connection of between 5,000 and 7,000 feet).

Power and Grounding

The new multicarrier PPN cabinet or any EPN cabinet added for the upgrade can be either AC- or DC-powered. If an added cabinet is powered differently from the existing cabinets, the existing cabinets do not have to be converted since mixed power configurations are allowed. However, the system's power and grounding must be modified so that the AC-powered cabinets are grounded to the same single-point ground bar as the DC-powered cabinets (see Figure 4-1).

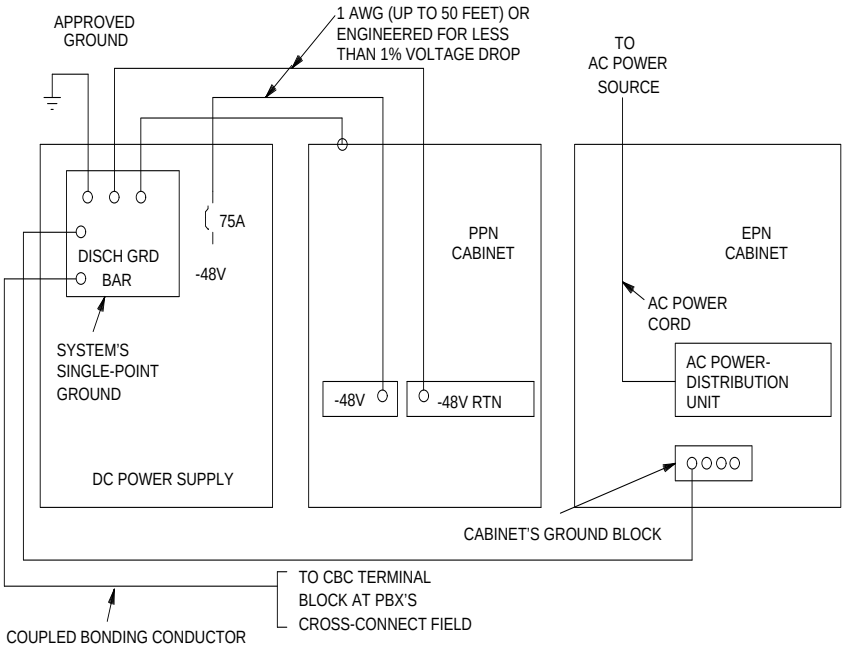

Figure 4-1. Typical Power and Grounding Arrangement for a Mixed AC/DC-Powered Multicabinet Configuration

See NOTE. If a new AC-powered cabinet is to be added, a separate AC receptacle is provided to support the new cabinet. This AC receptacle must not be shared with any other equipment and must not be controlled by a wall switch. For the convenience and safety of equipment-room personnel, the receptacle should not be located under the cross-connect field.

NOTE:
In contrast to the AC power that is likely to be currently available in a G1 or G3i equipment room, the new AC-powered PPN added for a G3r V4 upgrade uses 4-wire, 30-A, 208-V, AC power. Whereas, a G1 or G3i cabinet used either 3-wire, 50-A, 115-V power or 3-wire, 30-A, 208-V power.

If a new DC-powered cabinet is to be added, refer to *DEFINITY Communications System Generic 1 and Generic 3 Installation and Test*, 555-230-104, Issue 5, for DC power and grounding requirements.

116A Isolator

Each G3-MT connected to a DC-powered cabinet, via the asynchronous Electronic Industries Association (EIA) RS-232 interface (behind a PPN control carrier or behind an EPN expansion control carrier), requires a 116A isolator. The isolator is inserted at the RS-232 interface between the G3-MT and the interface connector to isolate grounding between the system and external adjuncts.

Power-Failure Stations

During routine switch operation, the ground for the power-failure stations is derived from the system's auxiliary cable. This ground will be disconnected during the upgrade, thus disabling the power-failure stations. Therefore, a ground strap will have to be run to the power-failure transfer panel. This strap should be connected shortly after power is removed and then disconnected just before power is restored to the upgraded system.

To minimize downtime during the G3r V4 upgrade, power-failure transfer equipment should be tested and, if need be, repaired before the hardware upgrade begins.

Software

The G3r V4 software and translations will be saved on the TN1656 Tape Drive circuit pack. This tape format is not compatible with the format of the G1 or G3i TN774 Tape Drive circuit pack.

The translations in the G1 or G3i system must be copied to a spare tape and sent to Software Technical Support (STS) to be converted and written to a G3r V4 tape. This process takes two weeks. The G3r V4 tapes (including one with translations) must be on-site before the upgrade can begin. For each G1 or G3i processor, two tapes (one system tape and one backup tape) must always be retained on site with the G1 or G3i system.

After a software upgrade, several features require special attention because of form changes or potential naming conflicts in the upgrade process. Most of these changes and conflicts are related either to a software upgrade from standard ACD to Call Vectoring or to changes in the ARS/AAR features to compensate for increasing uncertainty in the North American numbering plan. Also, if ARS is enabled (when upgrading from IR1V4 to GD-91 software), it may be necessary to modify the Call Type field on the ARS Analysis form to “unk” for all call types except “iop” or “int.”

Table 4-1 contains a list of implementation forms that are either new or changed for G3r V4.

After the upgrade, the Software Associate should check these forms to ensure that the upgraded translations are appropriate for the customer’s needs. Refer to *DEFINITY Communications System Generic 3r Transition Reference*, 555-230-636, and *DEFINITY Communications System Generic 3 V4 Implementation*, 555-230-655, for information to make any required changes.

ISDN Gateway

When a system is upgraded from a G1 to a G3, the ISDN Gateway (if installed) must be upgraded to the correct software release. Call progress messages to the ISDN Gateway may be intermittently lost, therefore, this upgrade must occur at the same time as the G1 to G3 upgrade.

Contact your AT&T representative for the correct software release.

Table 4-1. Changed/New Administration Forms for G3r V4 — from G1

From G1	To G3r V4
ARS fnpa	ARS Digit Analysis
ARS hnpa	ARS Digit Analysis
Allowed Call List	Toll Analysis
Code Restriction fnpa	Toll Analysis
Code Restriction hnpa	Toll Analysis
Interexchange Carrier	Interexchange Carrier
Permanent Switched Calls	Administered Connections
RNX Table	AAR Digit Analysis
Ten-Seven Digit Conversion	ARS/AAR Digit Conversion
None (Note)	Alias Station
None	Alphanumeric Dialing
None	Call Vector
None	Signaling Group
None	Access Endpoints
None	Vector Directory Number

NOTE:
"None" represents a new form for G3r V4.

Table 4-2. Changed/New Administration Forms for G3r V4 — from G3i

From G3i	To G3r V4
ARS Digit Analysis	ARS Digit Analysis
Toll Analysis	Toll Analysis
Interexchange Carrier	Interexchange Carrier
Administered Connections	Administered Connections
AAR Digit Analysis	AAR Digit Analysis
ARS/AAR Digit Conversion	ARS/AAR Digit Conversion

Software-Translation Upgrade

The G3r V4 software and translations will be saved on the TN1656 Tape Drive circuit pack. This tape format is not compatible with the format of the G1 or G3i TN774 Tape Drive circuit pack.

During an upgrade from a G1 or G3i to a G3r V4, STS must convert the G1 or G3i translations and write them to a G3r V4 tape. To enable this tape conversion, replace the system tape with a spare G1 or G3i tape. (Spare tape cartridges can be acquired from the QPPCN before the upgrade.) Then, copy the current G1 or G3i translations to the spare tape, and overnight mail this tape to STS. Also, put the original system tape back into the system.

If possible, the customer should put a freeze on any new translations while the spare tape is being converted. If not, be sure that the customer's switch administrator keeps detailed records of any translation changes made during that interval. These records will facilitate the reassignment of any changes on the G3r V4 tapes after the upgrade.

The new G3r V4 tapes (one with the converted translations, two if duplicated and the rest blank) must be on-site before the upgrade begins.

Since a new G3r V4 PPN will be installed during the upgrade, STS tape conversion must change the port-network number of the G1 or G3i PPN that will be converted to a G3r V4 EPN. To minimize the renumbering of port networks during the software upgrade and to minimize the rewiring and relabeling of the wall field during the hardware upgrade, the tape conversion will assign the next port-network number (after the highest-numbered port network in the system) to the G1 or G3i PPN that will become a G3r V4 EPN. For example, if a G1 or G3i system with two port networks (a PPN and an EPN) were upgraded to a G3r V4, the tape-conversion software would assign port network ''1'' to the new PPN and port network ''3'' to the additional EPN derived from the old G1 or G3i PPN.

Save Translations

1. Log in at the Manager I on the G1 or G3i.
2. If the system is duplex, enter **`status system`**, and press (RETURN) to verify that the system is in the ''active/standby'' mode.
3. Enter **`save translation`**. Press (RETURN). This command instructs the system to write all translation information from memory to the tape(s).

4. If the system is equipped with a TN750/B Announcement circuit pack, enter **`display announcements`**, and press (RETURN).

   If administered recorded announcements are listed, enter **`list configuration software-version`**, press (RETURN). Check Page 2 of this form to find out when the announcements were last saved, and ask the customer whether any announcements have changed since then.

   If so, the current announcements can be saved using the save announcements command. Enter **`save announcements`**, and press (RETURN).

5. Remove the system tape(s), install the backup tape(s), and wait for the tape(s) to retension.
6. If the system is duplex, enter **`status system`**, and press (RETURN) to verify that the system is in the ''active/standby'' mode.
7. Enter **`save translation`**. Press (RETURN).
8. Enter **`save announcements`** if appropriate. Press (RETURN).

Make Source Tape for Upgrade

A spare G1 or G3i tape must be acquired from the QPPCN before performing the following steps. For each processor, there must always be two tapes on site with the G1 or G3i switch. Do not send a system or backup tape to STS.

After performing the previous procedures, copy the G1 or G3i translations to the spare tape that will be used to make the G3r V4 tapes. Perform the following procedures:

1. Remove the backup tape, install the spare tape, and wait for the tape to retension.
2. See NOTE. Enter **`save translation`**. Press (RETURN). This command instructs the system to write all translation information from memory to the tape.

   NOTE:
   The off-site STS translation upgrade does not preserve the content of recorded announcements. Therefore, during the upgrade, any announcements stored on a TN750/B circuit pack must be rerecorded.

3. Remove the source tape.
4. Insert the system tape.

The tape removed in Step 3 should be mailed (with next-day delivery) to STS for use in making the G3r V4 tapes.

System Upgrades

There are many configurations of DEFINITY G1s and G3is in the field. In terms of both hardware and software, each system can have a unique configuration. However, to simplify G3r V4 upgrades, the existing PPN is always upgraded to an EPN, and an existing EPN is always upgraded to an EPN. A new multicarrier cabinet would then always serve as the PPN.

Upgrading a G1 or G3i EPN to a G3r V4 EPN requires changing, and often restructuring, the expansion interface circuit packs. If a G1 or G3i PPN is upgraded to a G3r V4 EPN, hardware changes (including carrier replacement) are required.

This section gives a sequential list of the steps required to upgrade the system.

Unduplicated G1 or G3i to Standard-Reliability G3r V4

See NOTE. Refer to *DEFINITY Communications System Generic 1 and Generic 3 Installation and Test*, 555-230-104, Issue 5, to install the new PPN cabinet.

NOTE:
During the wall-field wiring of the PPN installation, the wall field can also be relabeled with the new port-network number of the G1 or G3i PPN to be upgraded. (The STS software upgrade assigned the next port-network number, after the highest-numbered port network in the G1 or G3i system, to the upgraded G3r V4 EPN.)

If a second or third EPN is being added, refer to *DEFINITY Communications System Generic 1 and Generic 3 Installation and Test*, 555-230-104, Issue 5, to install the new EPN.

Upgrade Cabinets

The existing PPN cabinet is always upgraded to an EPN. An existing EPN cabinet is also always upgraded to an EPN. Upgrade the cabinets using the following procedures.

A G1 or G3i PPN is upgraded to a standard-reliability G3r V4 EPN by:

- Removing the control carrier in position ‘‘A’’
- Installing the J58890AF-1 expansion control carrier in position ‘‘A’’
- Adding the G3r V4 circuit packs
- Restructuring the port circuits as required

An unduplicated G1 or G3i EPN (either multicarrier or single-carrier) is upgraded to a standard-reliability G3r V4 EPN by:

- Replacing the TN776 expansion interface circuit pack (in slot 2A01) with the G3r V4 TN570 expansion interface.

Prerequisite Hardware

The equipment in Table 4-3 *must* be on-site before the upgrade begins. Ensure that the tapes are G3r V4 tapes.

To place a claim for missing equipment, as part of the Streamlined Implementation process, call ''1-800-772-5409,'' and respond to the call prompter.

Table 4-3. Required Hardware

Equipment	Description	Quantity
PEC 6300-07X	Processor Port Network	1
J58890AF	Expansion Control Carrier	1
106647985	TN775B Maintenance	1
103281788	TN570 Expansion Interface	w/o CSS: 2 or 6 (Note 1) w/CSS: 1 per port network
103281812	TN573 Switched Node Interface	w/CSS: 1 per port network
J58890TF	Tape Cartridge	2
105691158	CFY1 Current Limiter	1
63300A	FL2P-P-XX Fiber Cable	w/o CSS: 1 or 3 (Note 2) w/CSS: 1 per EPN
106455348 or 106455363	9823-A Lightwave Transceiver 9823-B Lightwave Transceiver	w/o CSS: 2 or 6 (Note 3) w/CSS: 2 per EPN w/o CSS: 2 or 6 (Note 3) w/CSS: 2 per EPN

Notes:

1. Depending on the number of G3r V4 EPNs. Two are required for a standard-reliability switch with two port networks; six with three port networks. Either one or four TN570s are shipped loose with the EPN equipment. The factory has installed either one or two TN570s in the new PPN.
2. Depending on the number of G3r V4 EPNs. Two or six, or two per EPN, are required if the PPN and EPN(s) are remotely located.

3. One pair for each fiber connection. For each connection, one 9823-type is installed in an EPN, and a like transceiver in the PPN. 4E transceivers cannot be reused from the upgraded G1 or G3i system. Additional 9823-type transceivers, ordered separately, are also shipped loose with the EPN equipment.

Required Tools

The following tools and items may be required during the upgrade:

- High-intensity flashlight or AC drop light
- 3/8-inch flat-blade screwdriver with a 10-inch shank (minimum)
- 5/16-inch and 1/4-inch sockets with a ratchet and 10-inch extension
- Power screwdriver (optional)
- Long-nose pliers to disconnect grounding straps and straighten backplane pins
- Static-proof or original circuit-pack packaging for transporting circuit packs
- Labels for identifying the port circuit packs and cables attached to the rear of cabinets
- Receptacle for holding approximately 100 self-tapping screws
- 12 spare #12 and #10 self-tapping screws
- 4 spare carrier grounding straps
- Authorized wrist grounding strap
- Repair kit for backplane pins (KS-22876 L2 or equivalent)
- One copy of each of the following manuals:
  - *DEFINITY Communications System Generic 3r V4 Maintenance*, 555-230-105, Issue 3
  - *DEFINITY Communications System Generic 3 V4 Implementation*, 555-230-653

Preventive Maintenance

During the G3r V4 upgrade, follow routine preventive maintenance procedures on the system to be upgraded. For information about the procedures and necessary equipment, refer to the “Preventive Maintenance’’ section in *DEFINITY Communications System Generic 3r V4 Maintenance*, 555-230-105, Issue 4.

Verify System Status

Before proceeding, the system should be examined for alarms, and every problem should be corrected. The system must be alarm-free.

Label Cables

To make reconnecting the cables simpler and more reliable, label both ends of the connector cables associated with the carrier to be removed (if not already labeled).

Shut Down DEFINITY AUDIX System

1. See WARNING. If a DEFINITY AUDIX System resides in the system to be upgraded, shut down the AUDIX assembly and allow the disk to completely spin down.

   WARNING:
   Neglecting to shut down an AUDIX assembly before powering down the system cabinet where it resides can damage the AUDIX disk.

2. See WARNING. To avoid an unexpected AUDIX reboot after an unplanned switch reboot, unseat the AUDIX assembly from its backplane connectors.

   WARNING:
   Before inserting or removing a circuit pack from a cabinet, put on a wrist strap and attach its plug or clip to the cabinet's frame.

Power Down G1 or G3i System

1. See CAUTION. At the PPN power-distribution unit, set the main circuit breaker to OFF.

   CAUTION:
   Powering down the control cabinet will cause important system data, such as BCMS data, records of queued ACD calls, Automatic Wakeup requests, and Do Not Disturb requests to be lost. Refer to DEFINITY Communications System Generic 1, Generic 3i, Generic 3i-Global, and Generic 3i V4 Maintenance, 555-204-105, Issue 7, for information about preparing the system for a power down. BCMS data cannot be stored to or retreived from tape.

2. At the EPN power-distribution unit, set the main circuit breaker to OFF.

Install Power-Failure Transfer Ground Strap

CAUTION:
To avoid contaminating single-point ground, do not connect the ground strap while the system is powered up.

1. Connect a strap's lead either to pin 49 of the connecting block or to pin 49 of the CAP (cable access panel) associated with the power-failure transfer panel.
2. Route the other lead to an approved ground source.
3. Connect the lead to the approved ground source.

Remove Doors and Panels and Disconnect Cables

1. Remove the front door from the cabinet (if desired).
2. With the cable retainer in front of you and the part number visible (4B or 4C), locate the slot that is almost vertical. (This slot is adjacent to the part number.) Insert a flat-blade screwdriver with a wide blade (1/4-inch recommended) into the slot, and twist the screwdriver. The retainer will snap open easily so that the cable can be removed.
3. At the cabinet, disconnect previously labeled cables associated with the carrier to be removed.
4. Behind a ''DEFINITY style'' cabinet, remove the back doors from the cabinet.
5. Behind a previously upgraded cabinet, remove all of the back panels. (Two different types of screws hold the back panels to the cabinet. The #10 screws can be removed with a screwdriver or a 1/4-inch socket. The #12 screws can be removed with a screwdriver or a 5/16-inch socket.)

Remove Circuit Packs from Carrier A

1. To ensure that circuit packs and power units in the ‘‘A’’ carrier are properly replaced, label each component with its slot number.
2. Disconnect the power cords from the power units in the ‘‘A’’ carrier.
3. See WARNING. Remove all circuit packs and power units from carrier ‘‘A.’’ Store the circuit packs in the static-proof packaging.

   WARNING:
   Before inserting or removing a circuit pack from a cabinet, put on a wrist strap and attach its plug or clip to the cabinet’s frame.

4. Remove the circuit-pack blanks from slots that do not contain circuit packs.
5. Remove the front trim plate from the ‘‘A’’ carrier by pulling straight off.

Remove Control Carrier A

1. See CAUTION and NOTE. Disconnect one end of the TDM/LAN cable (between the ‘‘A’’ and ‘‘B’’ carriers) from the ‘‘A’’ carrier (see Figure 4-2).
2. See CAUTION and NOTE. Disconnect one end of the TDM/LAN cable (between the ‘‘A’’ and ‘‘D’’ carriers) from the ‘‘A’’ carrier.

   CAUTION:
   When removing the TDM/LAN cables from a previously upgraded carrier, be careful that none of the short pieces of shrink tubing come off the four corner pins of the pin-field block. Otherwise, when the new equipment is connected, -48 volts could short to ground.

   NOTE:
   Note the position of the cable before disconnecting the TDM/LAN cables.

3. Disconnect one end of the eight ground straps (between the ‘‘A’’ and ‘‘B’’ carriers) from the ‘‘A’’ carrier (see Figure 4-3. These straps will be reconnected to the new ‘‘A’’ carrier.
4. Disconnect one end of the eight ground straps (between the ‘‘A’’ and ‘‘D’’ carriers) from the ‘‘A’’ carrier. These straps will be reconnected to the new ‘‘A’’ carrier.
5. Disconnect the ‘‘P1’’ (small 9-pin) connector and the ‘‘P2’’ (large 37-pin) connector from the ‘‘A’’ carrier (see Figure 4-4). Move the cables into a position where they will not interfere with removing the carrier.
6. Remove the fan trim plate by pulling straight off.
7. Clean or replace the air filter (403326820) if necessary.
8. In front of carrier, remove the four screws (top two first) holding the ‘‘A’’ carrier to the cabinet frame. Use a long-handle screwdriver or 5/16-inch socket with a 10-inch extension.
9. Behind the carrier in a ‘‘DEFINITY style’’ cabinet, remove the two screws holding the ‘‘A’’ carrier’s rear connector panel to the cabinet frame.
10. See CAUTION. Slide the carrier forward 1 to 2 inches; then, from the back, be sure that no cables or wiring harnesses are caught on the cabinet/carrier framework.

    CAUTION:
    Cables and wiring harnesses can be damaged if they catch on the framework and if too much pressure is applied in removing the carrier.

11. Remove the carrier by sliding it out the front of the cabinet.

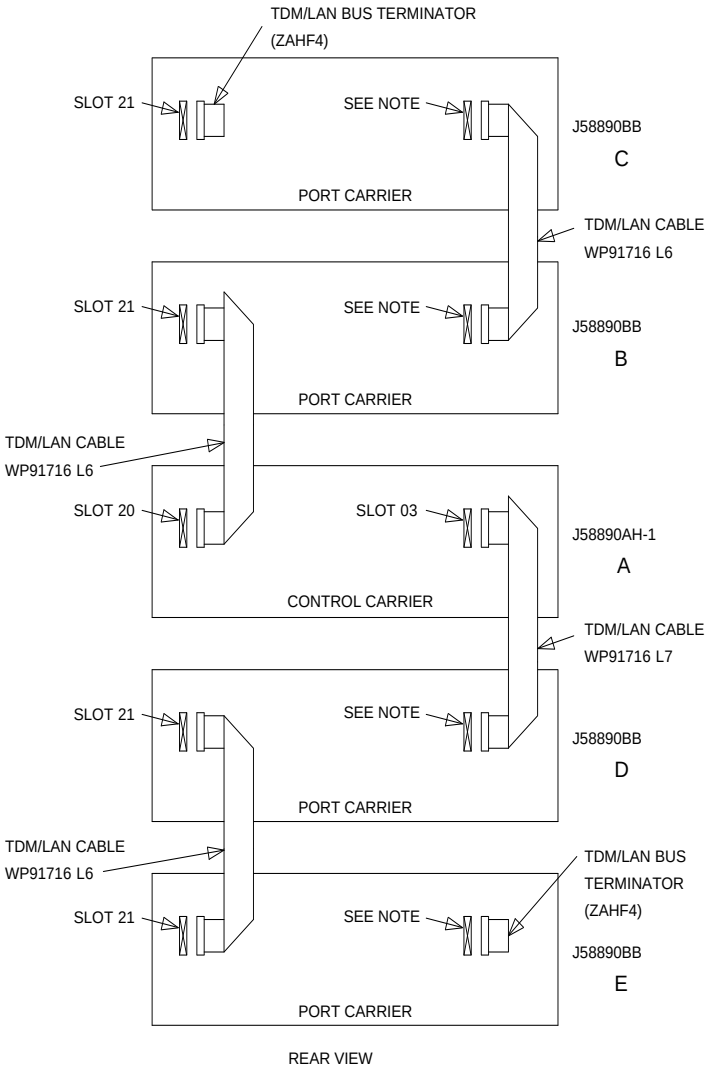

NOTE:

ON PORT CARRIER J58890BB-1, CONNECT THE TDM/LAN CABLE OR TDM/LAN TERMINATOR TO SLOT 02. ON PORT CARRIERS J58890BB-2 AND -3, CONNECT THE TDM/LAN CABLES TO SLOT 01.

Figure 4-2. TDM/LAN Connections for Unduplicated G1 or G3i PPN

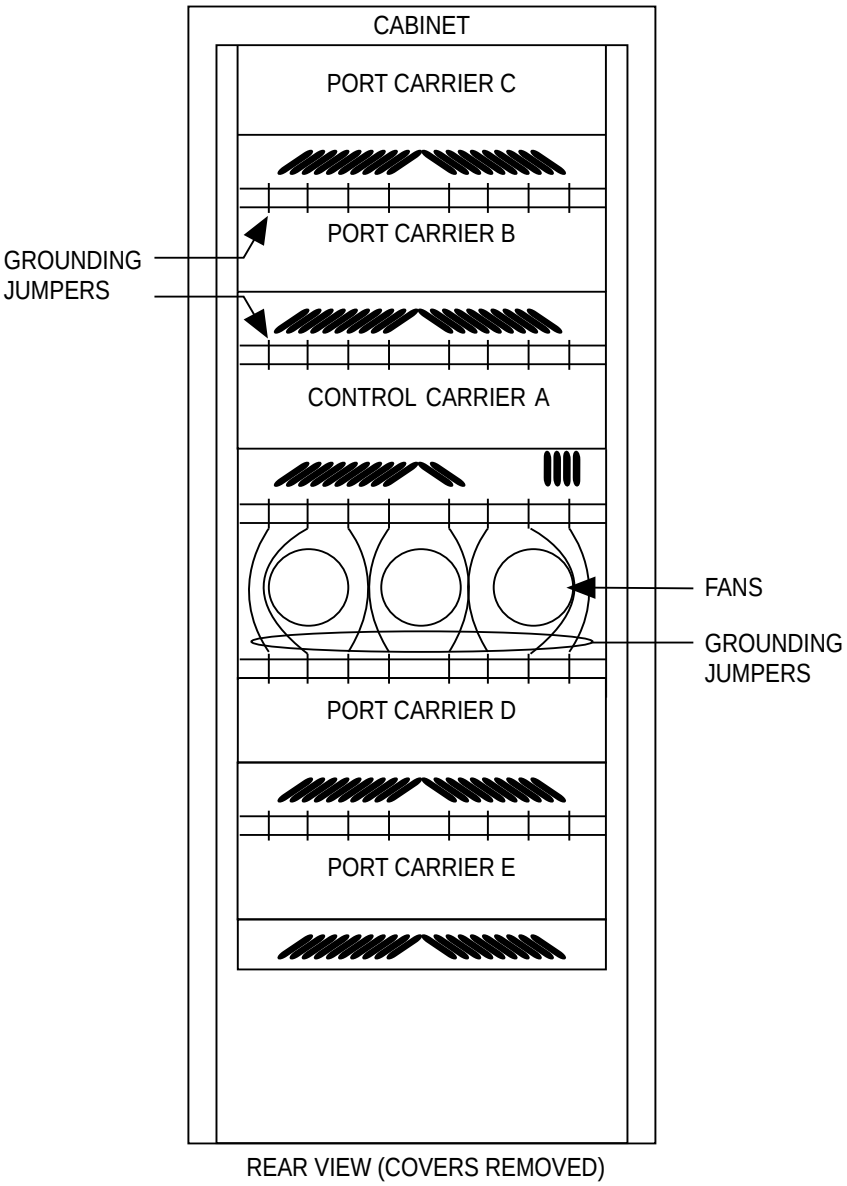

Figure 4-3. Locations of Grounding Jumpers

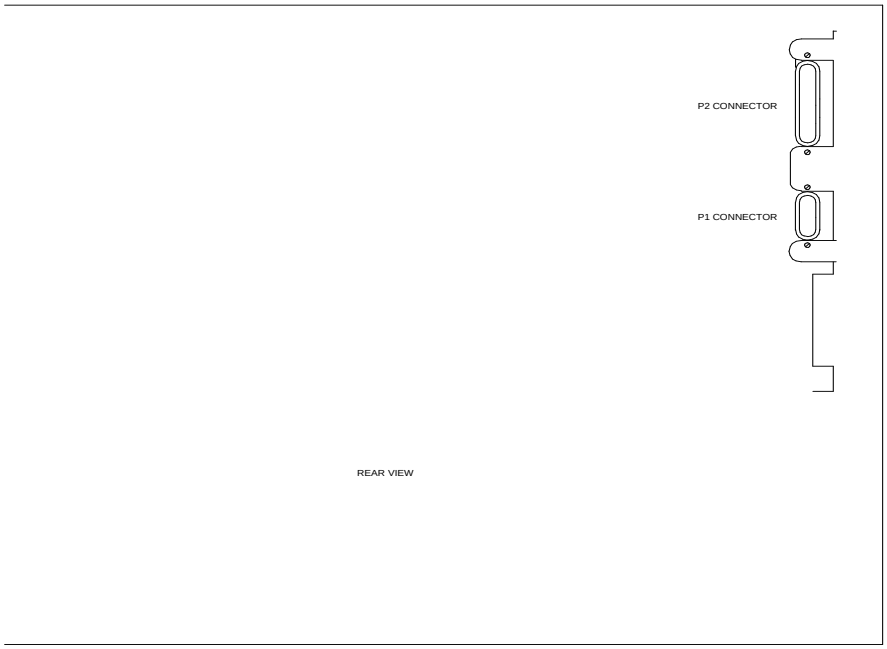

Figure 4-4. Location of P1 and P2 Connectors

Prepare New Expansion Control Carrier A

1. Visually inspect the new carrier for any damage. Verify that the backplane pins are not bent.
2. Place the expansion control carrier on the floor so that the rear of the carrier faces up.
3. Install the CFY1 current limiter (CURL) on the ‘‘A’’ carrier to the pin-field block marked ‘‘CURL.’’ The CURL is inserted with the components on the left side as viewed from the rear.
4. At the rear connector panel, determine which connectors will have a cable attached, and install a 4B cable retainer on each of these connectors.

Install New Expansion Control Carrier A

1. Install the J58890AF-1 expansion control carrier in position ‘‘A’’ by lining up the plastic alignment tips on the top rear of the carrier with the screw holes in the cabinet. These alignment tips will support the carrier while the screws are being replaced. Ensure that the power cords are properly placed in the slots at the sides of the carrier.
2. See CAUTION. Fasten the carrier into position with four self-tapping screws saved from the removal of the old carrier.

   CAUTION:
   Carefully realign the threads on the self-tapping screws by turning them clockwise a turn or two before tightening them to avoid stripping the threads out of the framework.

3. Behind the carrier in a ‘‘DEFINITY style’’ cabinet, replace the two screws saved from the removal of the old carrier.
4. Connect the ‘‘P2’’ and ‘‘P1’’ (large and small) connectors to the ‘‘A’’ carrier (see Figure 4-4). If necessary, to get enough slack in the cables, cut the tie wrap holding the intercabinet cables from the upright in the area being installed. Snap the connector lock into place to ensure the connection is properly made.
5. Connect the eight ground straps from the ‘‘B’’ carrier to the new ‘‘A’’ carrier (see Figure 4-3). These straps were left connected to the ‘‘B’’ carrier when the old ‘‘A’’ carrier was removed.
6. Connect the eight ground straps from the ‘‘D’’ carrier to the new ‘‘A’’ carrier (see Figure 4-3). These straps were left connected to the ‘‘D’’ carrier when the old ‘‘A’’ carrier was removed.

7. See NOTE. For an AC-powered expansion control carrier, install the two new carrier-ground straps. One strap connects ground point ‘‘1’’ to the A-carrier frame (on the right side), and the other connects ground point ‘‘8’’ to the A-carrier frame (on the left side).

   NOTE:
   DC-powered carriers do not use these carrier-ground straps.

8. Connect the loose end of the TDM/LAN cable (between the ‘‘A’’ and ‘‘D’’ carriers) to the pin-field block marked ‘‘TDM’’ on the right side of the ‘‘A’’ carrier (see Figure 4-5 and Table 4-5). The other end remained connected to the ‘‘D’’ carrier when the old carrier was removed.
9. Connect the loose end of the TDM/LAN cable (between the ‘‘A’’ and ‘‘B’’ carriers) to the pin-field block marked ‘‘TDM’’ on the left side of the ‘‘A’’ carrier. The other end remained connected to the ‘‘B’’ carrier when the old carrier was removed.

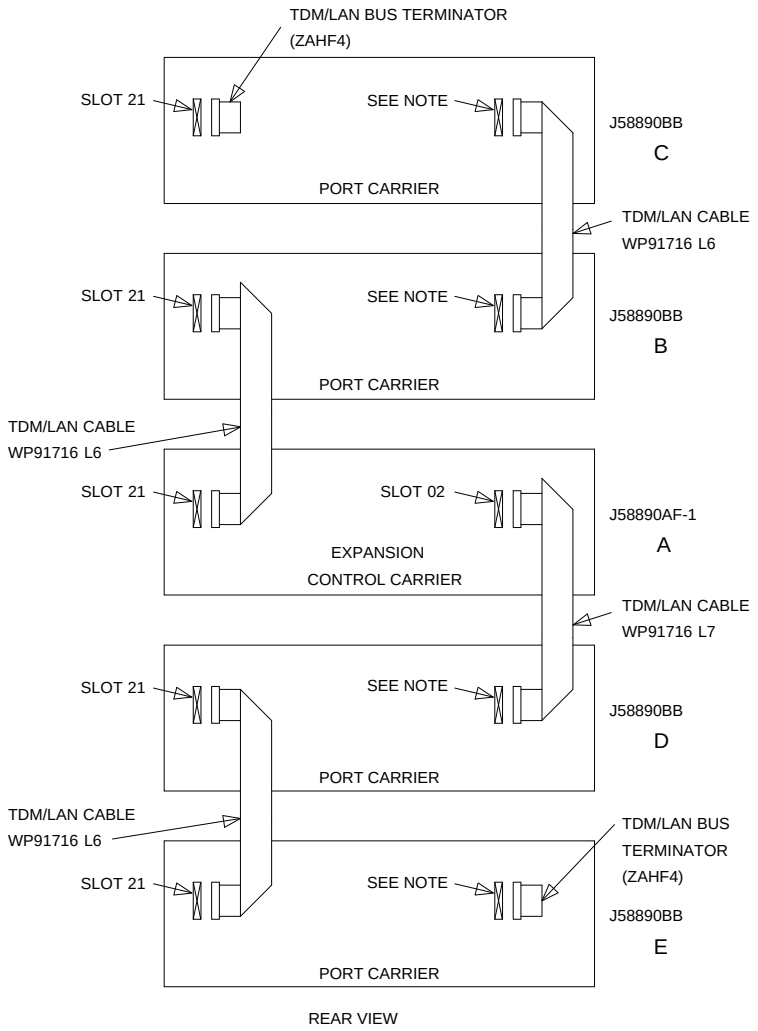

NOTE:

ON PORT CARRIER J58890BB-1, CONNECT THE TDM/LAN CABLE OR TDM/LAN TERMINATOR TO SLOT 02. ON PORT CARRIERS J58890BB-2 AND -3, CONNECT THE TDM/LAN CABLES TO SLOT 01.

Figure 4-5. TDM/LAN Connections for Standard-Reliability G3r V4 EPN

Table 4-4. TDM/LAN Connections

"J" Number	Carrier Type	LHS Slot	RHS Slot
J58890BB-1	Port	21	02
J58890BB-2	Port	21	01
J58890BB-3	Port	21	01
J58890AF	EPN Control "A"	21	02

10. Install the front trim plates on the "A" carrier. Install the fan trim plate.
11. Install the power units (removed from G1 or G3i) into the "A" carrier. There are four different pairs of power units available. They are the 631AR1 and 631BR1, the 631WA1 and 631WB1, the 631DA1 and 631DB1, and the 644A and 645B.

    Do not interchange the physical locations of the units. The 631AR1, 631WA1, 631DA1, or 644A are installed in the left side, while the 631BR1, 631WB1, 631DB1, or 645B are installed in the right side (see Figure 4-6).
12. If the expansion control carrier contains a 631BR1, 631WB1, or 645B power unit, install the previously removed TN736 power unit in port slots "18" and "19" of the carrier (adjacent to the 631BR1, 631WB1, or 645B). If the system is equipped for neon message waiting, a TN752 or TN755 power unit must be used.

    NOTE:
    The TN736 is not required when the 631DB1 or 645B power unit is used in the J58890AF expansion control carrier or the J58890BB-2 or J58890BB-3 port carriers. It is required in the J58890BB-1 port carrier, regardless of which 631 power unit is provided. Use the TN752 or TN755 if the system is equipped with neon message waiting.

13. Connect the power cords to the power units. The power cords are the white cables equipped with plugs that are run through the slots in the front of each carrier (see Figure 4-7).

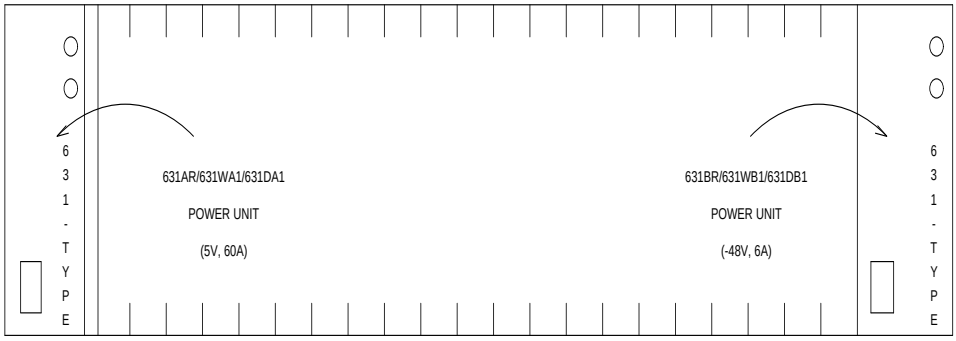

Figure 4-6. Locations of Power Units

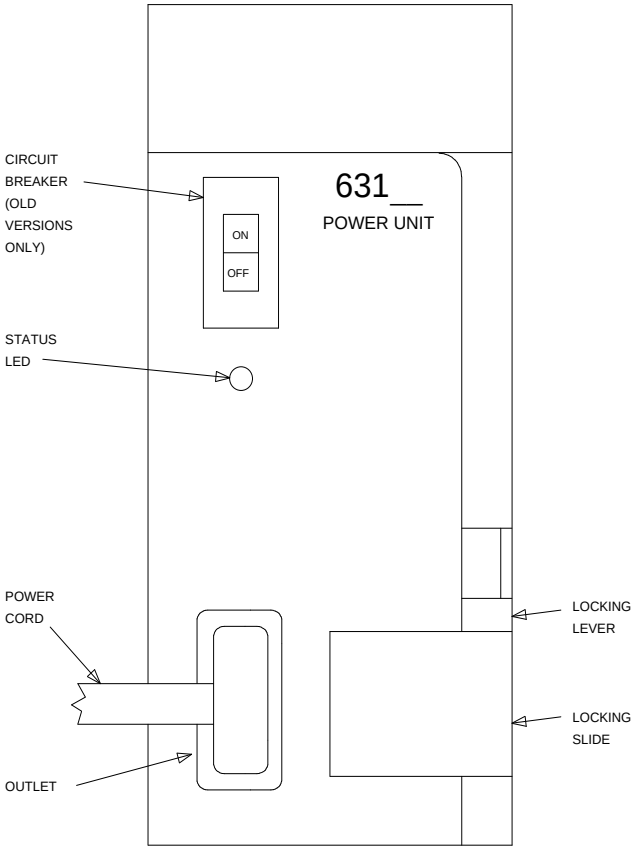

Figure 4-7. 631-Type Power Unit

Install Circuit Packs

1. See WARNING. Install the new G3r V4 control circuit packs into carrier ‘‘A.’’ Use the following figure, the new decal, and the annotated ‘‘list configuration all’’ (provided with the G3r V4 tape) as a guide.

   WARNING:
   Before inserting or removing a circuit pack from a cabinet, put on a wrist strap and attach its plug or clip to the cabinet’s frame.

2. See preceding WARNING and following WARNING and NOTE. Install the port circuit packs previously removed into the ‘‘A’’ carrier using the decal and the annotated ‘‘list configuration all’’ (provided with the G3r V4 tape) as a guide.

   WARNING:
   These installed port circuit packs must conform to the usable vintage requirements for a G3r V4 system (see Reference Guide for Circuit-Pack Vintages and Change Notices).

   NOTE:
   Since the new G3r V4 expansion control carrier has eleven more port slots than the removed control carrier, there should not be a need to move and retranslate these circuit packs.

   For G1 systems without an EPN, if a port circuit pack was located in slot ‘‘01’’ of control carrier ‘‘A,’’ the STS software upgrade retranslated this circuit pack to occupy an empty port slot in the new expansion control carrier.

3. Install circuit-pack blanks in slots not equipped with circuit packs.

4. For a directly connected standard-reliability G3r V4 system with two port networks, ensure that the PPN and this EPN are both equipped with a TN570 expansion interface circuit pack.

   For a directly connected system with three port networks, ensure that the PPN and each EPN have two TN570s.

   For a CSS-connected system, ensure that each port network has a TN570 and that the switch node carrier has one TN573 for each port network.

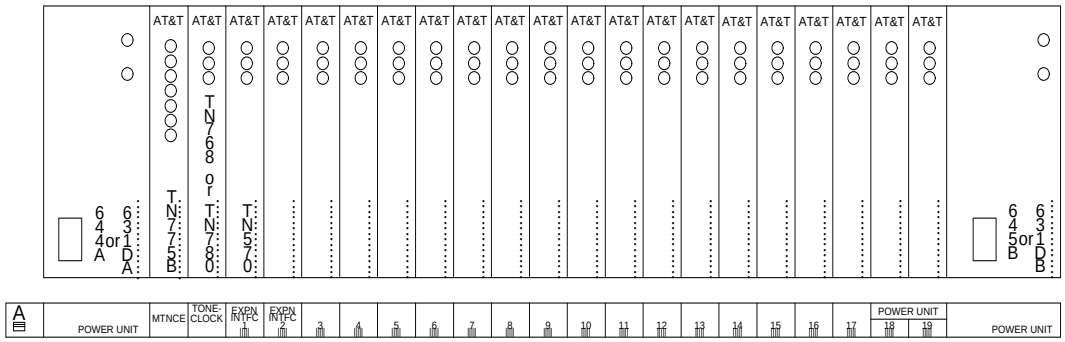

Figure 4-8. Circuit-Pack Locations in G3r V4 Expansion Control Carrier

Interconnect Port Networks — Standard-Reliability System

See NOTES. Fiber-optic cabling terminated to the various lightwave transceivers can interconnect port networks (PNs) to various maximum distances:

- 9823A transceivers can support fiber connections up to 4,900 ft. (about 0.9 miles)
- 9823B transceivers can support fiber connections up to 25,000 ft (about 4.7 miles)

When available and whenever the desired distance between the port networks is less than 25,000 feet, fiber is the preferred medium for interconnecting port networks, providing significantly higher-bandwidth connectivity than DS1C remoting.

NOTE:
As always, these distance limitations are approximate measurements of the *actual* fiber right-of-way (not of the shortest linear distance) between the two endpoints.

NOTE:
It is important to label every cable that you install. For details, refer to the section, *Labels for Fiber-Optic Cables*, in Appendix E of the installation manual.

NOTE:
Throughout these procedures, remember to keep track of which fiber is attached to which connector on each lightwave transceiver. This section provides figures offering the suggested way of making these connections.

The connectors on the lightwave transceivers are labeled either “TX” (transmit) or “RX” (receive), while the fibers attached to each connector are numbered either ‘‘1’’ or ‘‘2.’’ A viable fiber connection is only made when both fibers in each cable (that is, ‘‘1’’ and ‘‘2’’) route from the “TX” connector of a port network to the “RX’’ connector of its adjacent port network. For an example, refer to Figure 4-10.)

NOTE:
For implementation details, refer to the ‘‘Fiber Link Administration’’ sections of *DEFINITY Communications System Generic 3 V4 Implementation*, 555-230-655.

Collocated Port Networks

For a standard-reliability system with collocated expansion port network, one fiber-optic cable (FL2P-P-XX) and two lightwave transceivers (9823-type) are required to directly connect the networks.

For a standard-reliability system with two collocated expansion port networks, three fiber-optic cables (FL2P-P-XX) and six lightwave transceivers (9823-type) are required to directly connect the networks.

NOTE:
For the FL2P-P-XX fiber-optic cable, the -XX suffix represents the length of the cable in feet. Based on floor-plan considerations, the length of these cables may vary. However, 20-foot cables are normally adequate for a G3r V4 with two port networks.

See NOTE. For collocated cabinets, the fiber-optic cables should be routed directly from the PPN to the EPN cabinet. If, for this upgrade, a ''DEFINITY style'' PPN cabinet is collocated with another ''DEFINITY style'' EPN cabinet, the preferred routing is to run the cables *up* the cable tray and out the top of the PPN cabinet. The cables are then run to the other cabinet, through the top of the cabinet, and down the cable tray to the desired carrier level.

NOTE:
Refer to Appendix E of *DEFINITY Communications System Generic 1 and Generic 3 Installation and Test*, 555-230-104, Issue 5, for additional guidelines about fiber routing.

See NOTE. If, for this upgrade, a ''DEFINITY style'' PPN cabinet is collocated with either a small cabinet, medium cabinet, or single-carrier cabinet stack, the preferred routing is to run the cables *down* the cable tray and out the bottom of the PPN cabinet. The cables are then run to the EPN cabinet and up the outside of the rear panels to the desired carrier level.

NOTE:
Within this chapter, the step-by-step instructions will assume that every port network in the system is a ''DEFINITY style'' cabinet.

Fiber-Remoted Port Networks

For a standard-reliability system with one fiber-remoted expansion port network, two fiber-optic cables (FL2P-P-XX), two lightwave transceivers (9823-type), and two lightwave-interface units (provided by the PSC) are required.

For a standard-reliability system with two fiber-remoted expansion port networks, six fiber-optic cables (FL2P-P-XX), six lightwave transceivers (9823-type), and six lightwave-interface units (provided by the PSC) are required.

For fiber-remoted cabinets, the cables should be routed down the cable tray and out the bottom of the cabinet to the cross-connect field where the lightwave-interface units are located.

DS1C-Remoted Port Networks

For a standard-reliability system with one DS1C-remoted expansion port network, two DS1C circuit packs (TN574), two DS1C-to-EI cables (846448637 and/or 846448645), two H-600-348 cables, from one to four pairs of channel service units (CSUs), and from one to four pairs of wall-field cables (provided with the CSUs) are required.

For a standard-reliability system with two DS1C-remoted expansion port networks, this arrangement requires:

- Six DS1C circuit packs (TN574)
- Six DS1C-to-EI cables (846448637 and/or 846448645)
- Six H-600-348 cables
- Three, six, nine, or twelve pairs of channel service units (CSUs)
- Three, six, nine, or twelve pairs of wall-field cables (provided with the CSUs)

In any case, use cable ties to secure the cable against the walls of the cable tray at the cable-tie positions built into the trays.

For Either One or Two Collocated Expansion Port Networks

1. Behind port carrier B of PPN cabinet 1 (see Figure 4-9 through Figure 4-12):
    - Install a 9823-type lightwave transceiver on cable connector at slot 1B02.
    - Connect one end of the fiber-optic cable to the lightwave transceiver, just installed, at slot 1B02.
    - Delicately attach the fiber-optic cable (with cable ties) to the wall of the cable tray at the built-in cable-tie positions.
2. Behind control carrier A of EPN cabinet 2:
    - Install the same kind (either 9823-A or 9823-B) of lightwave transceiver on cable connector at slot 2A01.
    - Connect the other end of the fiber-optic cable to the lightwave transceiver, just installed, at slot 2A01.
    - Delicately attach the fiber-optic cable (with cable ties) to the wall of the cable tray at the built-in cable-tie positions.
    - At the top of the cabinet, coil up the surplus length of fiber-optic cable, and delicately attach the coil to the wall of the cable tray.

For Two Collocated Expansion Port Networks

1. Behind port carrier C of PPN cabinet 1:
   - Install a 9823-type lightwave transceiver on cable connector at slot 1C02.
   - Connect one end of the fiber-optic cable to the lightwave transceiver, just installed, at slot 1C02.
   - Delicately attach the fiber-optic cable (with cable ties) to the wall of the cable tray at the built-in cable-tie positions.
2. Behind control carrier A of EPN cabinet 3:
   - Install the same kind (either 9823-A or 9823-B) of lightwave transceiver on cable connector at slot 3A01.
   - Connect the other end of the fiber-optic cable to the lightwave transceiver, just installed, at slot 3A01.
   - Delicately attach the fiber-optic cable (with cable ties) to the wall of the cable tray at the built-in cable-tie positions.
   - At the top of the cabinet, coil up the surplus length of fiber-optic cable, and delicately attach the coil to the wall of the cable tray.
3. Behind control carrier A of EPN cabinet 2:
   - Install a 9823-type lightwave transceiver on cable connector at slot 2A02.
   - Connect one end of the fiber-optic cable to the lightwave transceiver, just installed, at slot 2A02.
   - Delicately attach the fiber-optic cable (with cable ties) to the wall of the cable tray at the built-in cable-tie positions.
4. Behind control carrier A of EPN cabinet 3:
   - Install the same kind (either 9823-A or 9823-B) of lightwave transceiver on cable connector at slot 3A02.
   - Connect the other end of the fiber-optic cable to the lightwave transceiver, just installed, at slot 3A02.
   - Delicately attach the fiber-optic cable (with cable ties) to the wall of the cable tray at the built-in cable-tie positions.
   - At the top of the cabinet, coil up the surplus length of fiber-optic cable, and delicately attach the coil to the wall of the cable tray.

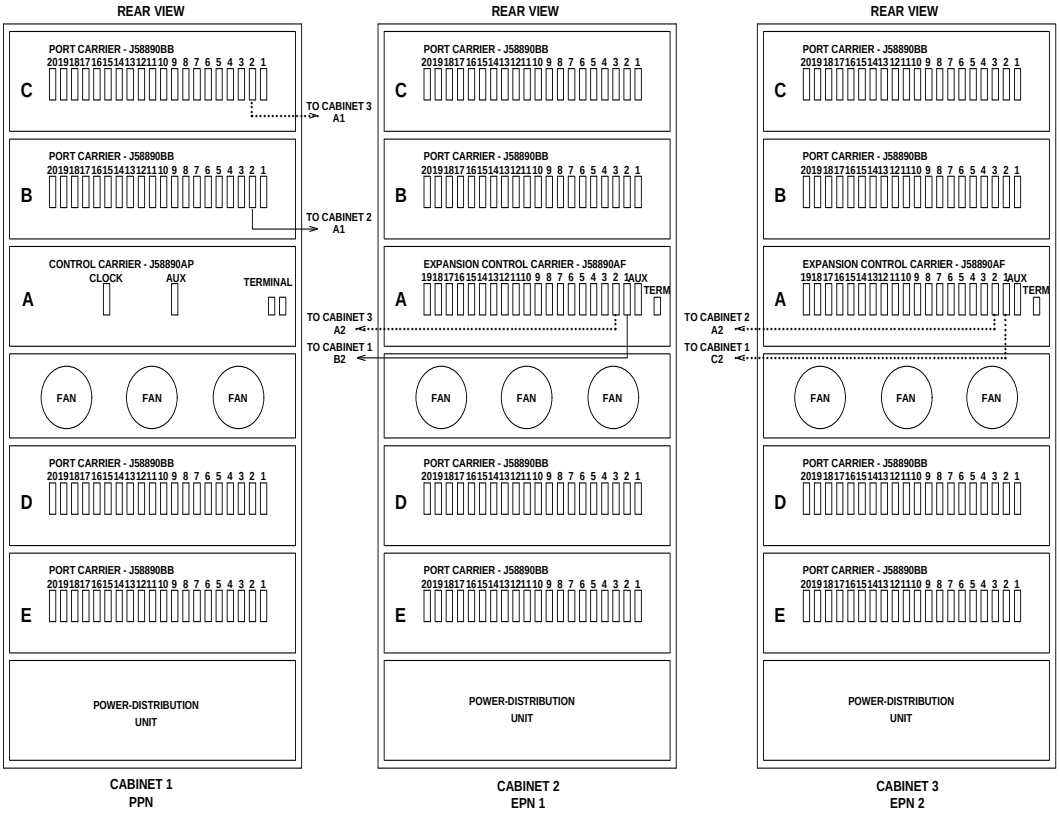

Figure 4-9. Standard-Reliability G3r V4 with Two or Three Port Networks

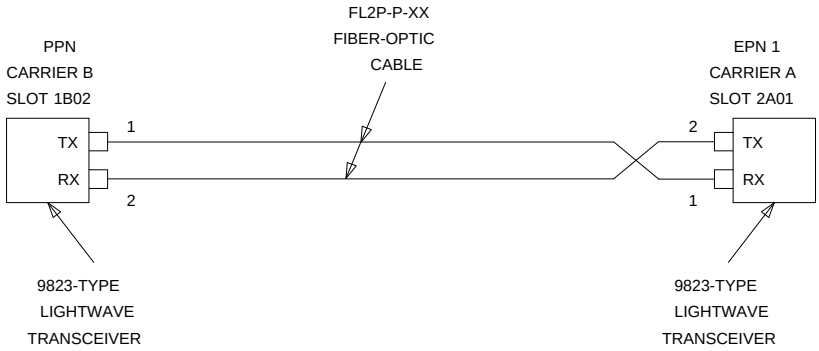

Figure 4-10. Fiber-Optic Connections PPN to EPN1

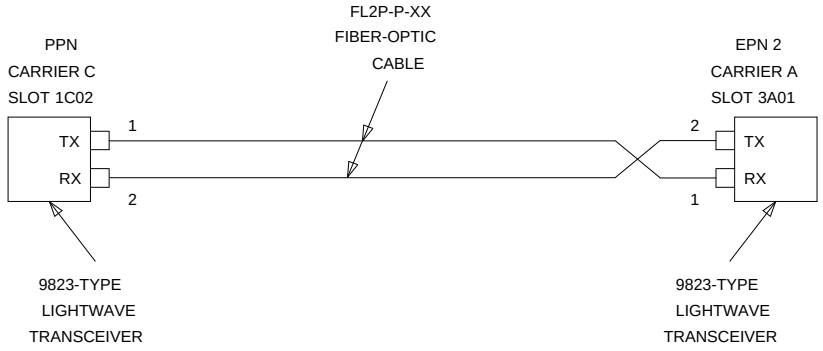

Figure 4-11. Collocated Fiber-Optic Connections PPN to EPN2

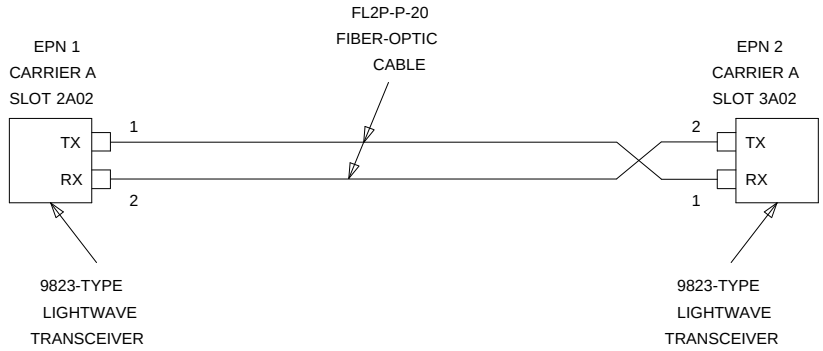

Figure 4-12. Collocated Fiber-Optic Connections EPN1 to EPN2

For Either One or Two Fiber-Remoted Expansion Port Networks

1. Behind port carrier B of PPN cabinet 1 (see Figure 4-13 through Figure 4-16):
   - Install a 9823-type lightwave transceiver on cable connector at slot 1B02.
   - Connect one end of the fiber-optic cable to the lightwave transceiver at slot 1B02.
   - Route the fiber-optic cable from the transceiver to the cabinet's cable tray and downward out of the cabinet through the cable manager to the PDS cross-connect facility.
   - At the PDS cross-connect facility, connect the fiber-optic cable to the lightwave-interface unit provided.
   - Delicately attach the fiber-optic cable (with cable ties) to the wall of the cable tray at the built-in cable-tie positions.
2. Behind control carrier A of EPN cabinet 2:
   - Install the same kind (either 9823-A or 9823-B) of lightwave transceiver on cable connector at slot 2A01.
   - Connect the fiber-optic cable to the lightwave transceiver slot 2A01.
   - Route the fiber-optic cable from the lightwave transceiver to the cabinet's cable tray and downward out of the cabinet through the cable manager to the PDS cross-connect facility.
   - At the PDS cross-connect facility, connect the fiber-optic cable to the lightwave-interface unit provided.
   - Delicately attach the fiber-optic cable (with cable ties) to the wall of the cable tray at the built-in cable-tie positions.
   - Coil up the surplus length of fiber-optic cable, and place the coil in the cable manager.

For Two Fiber-Remoted Expansion Port Networks

1. Behind port carrier C of PPN cabinet 1:
   - Install a 9823-type lightwave transceiver on cable connector at slot 1C02.
   - Connect one end of the fiber-optic cable to the lightwave transceiver at slot 1C02.
   - Route the fiber-optic cable from the lightwave transceiver to the cabinet's cable tray and downward out of the cabinet through the cable manager to the PDS cross-connect facility.
   - At the PDS cross-connect facility, connect the fiber-optic cable to the lightwave-interface unit provided.
   - Delicately attach the fiber-optic cable (with cable ties) to the wall of the cable tray at the built-in cable-tie positions.
2. Behind control carrier A of EPN cabinet 3:
   - Install the same kind (either 9823-A or 9823-B) of lightwave transceiver on cable connector at slot 3A01.
   - Connect the fiber-optic cable to the lightwave transceiver slot 3A01.
   - Route the fiber-optic cable from the lightwave transceiver to the cabinet's cable tray and downward out of the cabinet through the cable manager to the PDS cross-connect facility.
   - At the PDS cross-connect facility, connect the fiber-optic cable to the lightwave-interface unit provided.
   - Delicately attach the fiber-optic cable (with cable ties) to the wall of the cable tray at the built-in cable-tie positions.
   - Coil up the surplus length of fiber-optic cable, and place the coil in the cable manager.

3. Behind control carrier A of EPN cabinet 2:
   - Install a 9823-type lightwave transceiver on cable connector at slot 2A02.
   - Connect one end of the fiber-optic cable to the lightwave transceiver at slot 2A02.
   - Route the fiber-optic cable from the lightwave transceiver to the cabinet's cable tray and downward out of the cabinet through the cable manager to the PDS cross-connect facility.
   - At the PDS cross-connect facility, connect the fiber-optic cable to the lightwave-interface unit provided.
   - Delicately attach the fiber-optic cable (with cable ties) to the wall of the cable tray at the built-in cable-tie positions.
4. Behind control carrier A of EPN cabinet 3:
   - Install the same kind (either 9823-A or 9823-B) of lightwave transceiver on cable connector at slot 3A02.
   - Connect the fiber-optic cable to the lightwave transceiver slot 3A02.
   - Route the fiber-optic cable from the lightwave transceiver to the cabinet's cable tray and downward out of the cabinet through the cable manager to the PDS cross-connect facility.
   - At the PDS cross-connect facility, connect the fiber-optic cable to the lightwave-interface unit provided.
   - Delicately attach the fiber-optic cable (with cable ties) to the wall of the cable tray at the built-in cable-tie positions.
   - Coil up the surplus length of fiber-optic cable, and place the coil in the cable manager.

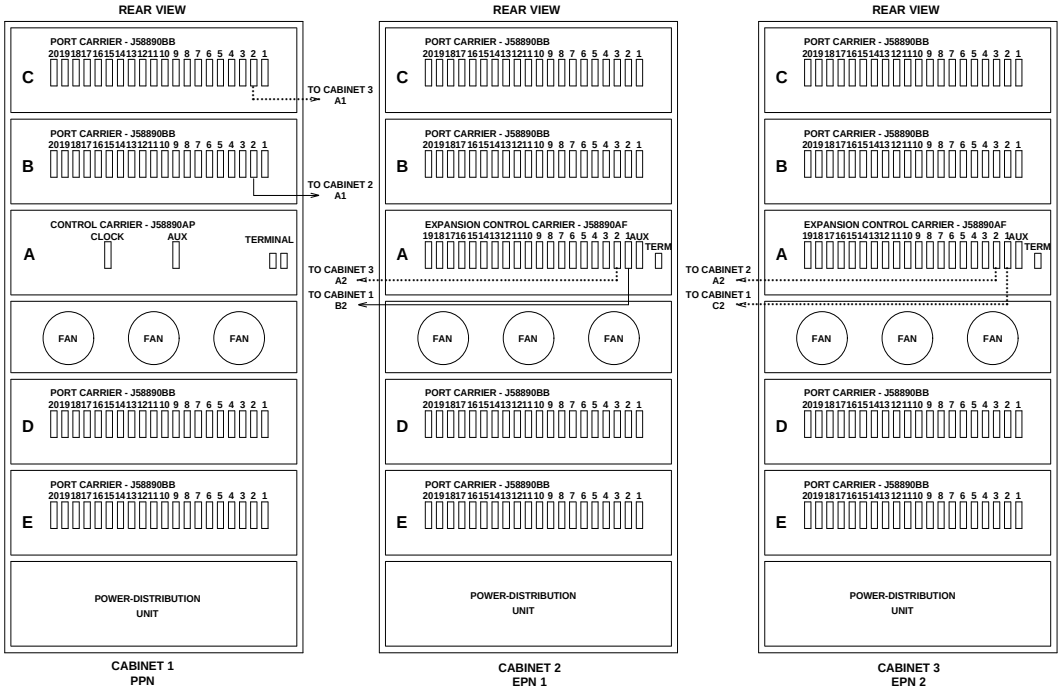

Figure 4-13. Standard-Reliability G3r V4 with Two or Three Port Networks

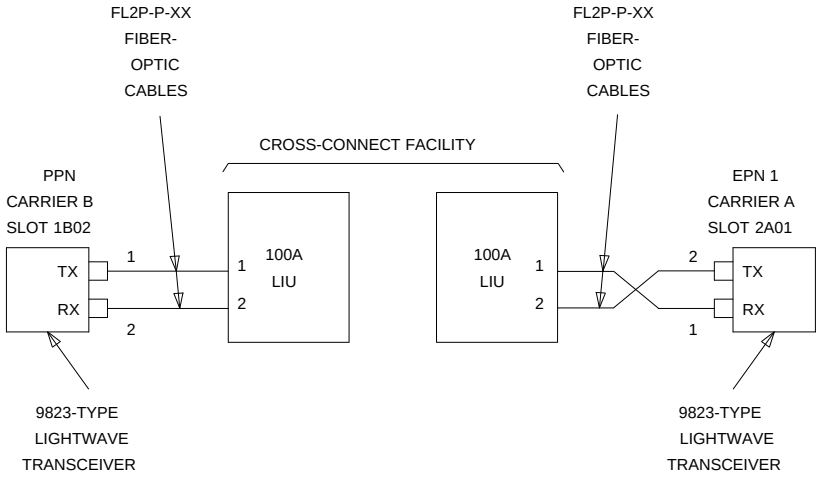

Figure 4-14. Fiber-Optic Connections PPN to EPN1

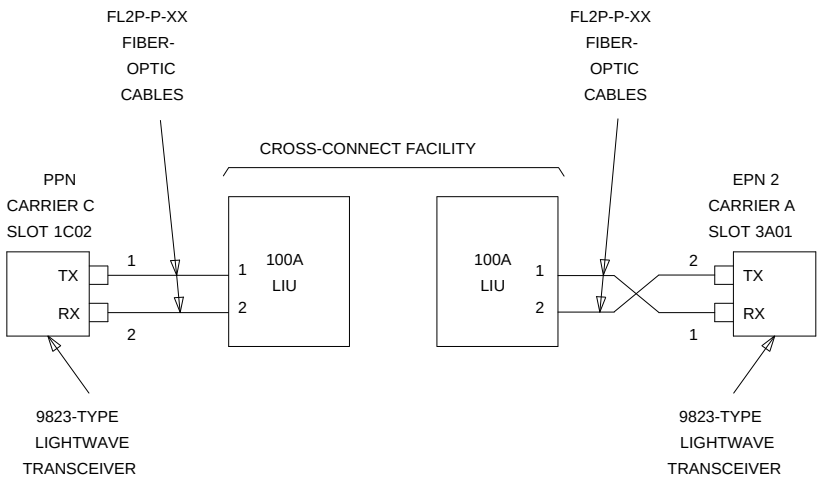

Figure 4-15. Fiber-Optic Connections PPN to EPN2

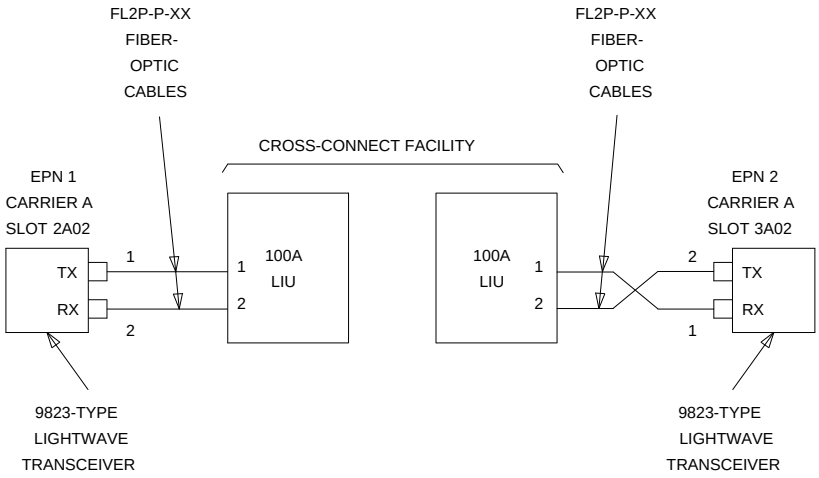

Figure 4-16. Fiber-Optic Connections EPN1 to EPN2

For One to Fifteen Switch-Connected Expansion Port Networks

1. Behind the PPN cabinet (see Figure 4-17):
   - Install a 9823-type lightwave transceiver on cable connector at slot 1E02.
   - Install a 9823-type lightwave transceiver on cable connector at slot 1B02.
   - Connect one end of the metallic intercarrier cable to the lightwave transceiver at slot 1E02.
   - Route the intercarrier cable from the lightwave transceiver to the cabinet's cable tray and upward to carrier "B."
   - Connect the other end of the intercarrier cable to the lightwave transceiver at slot 1B02.
   - Attach the intercarrier cable (with cable ties) to the wall of the cable tray at the built-in cable-tie positions.
2. Behind switch node carrier E of PPN cabinet 1:
   - For each EPN, install one 9823-type lightwave transceiver on a cable connector with the following order of slots: 1E20, 1E03, 1E19, 1E04, 1E18, 1E05, etc.
   - Connect one end of each fiber-optic cable to each lightwave transceiver, just installed.
   - Delicately attach the fiber-optic cables (with cable ties) to the wall of the cable tray at the built-in cable-tie positions.
3. Behind control carrier A of each EPN cabinet:
   - Install the same kind (either 9823-A or 9823-B) of lightwave transceiver on cable connector at slot A01.
   - Connect the other end of the fiber-optic cable to the lightwave transceiver, just installed, at slot A01.
   - Delicately attach the fiber-optic cable (with cable ties) to the wall of the cable tray at the built-in cable-tie positions.
   - At the top of the cabinet, coil up the surplus length of fiber-optic cable, and delicately attach the coil to the wall of the cable tray.

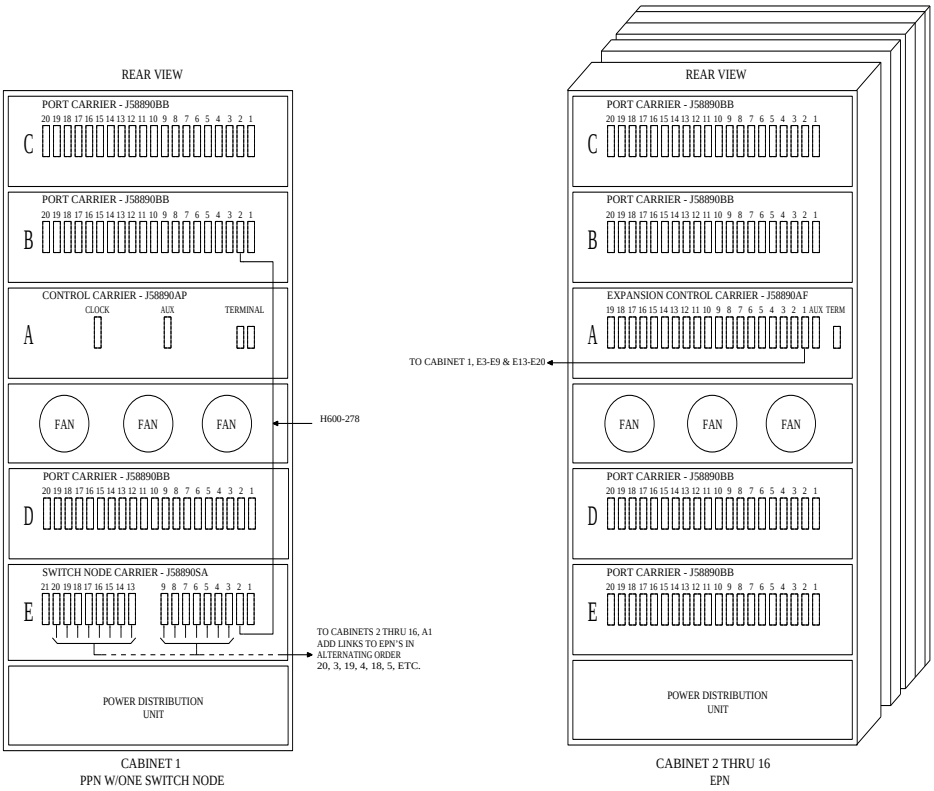

Figure 4-17. Fiber-Optic Connections through Center Stage Switch

DS1C-Remoted Cabinets

See NOTES. Digital Services 1 (DS1) facilities and associated equipment-room hardware and cabling can interconnect two port networks (PNs) located up to 100 miles apart. Although DS1 remoting always serves as a lower-bandwidth alternative to fiber remoting, DS1 remoting is especially attractive when:

- Fiber-optic cabling is unavailable to the remote site
- When the desired distance between the port networks exceeds the practical fiber limit of 25,000 feet (about 4.7 miles)
- Digital Services facilities, with enough bandwidth for interconnection, already exist between the two port networks

NOTE:
As always, these distance limitations are approximate measurements of the *actual* fiber or copper right-of-way (not of the shortest linear distance) between the two endpoints.

NOTE:
The 100-mile limit for DS1 remoting is the maximum distance between *any* two port networks in a G3r V4 system with either direct or switched port-network connections.

For example, in a *directly connected* system, a single EPN can be remoted up to 100 miles. This is because the length of the *direct* fiber connection from any port network in the local equipment room to the remote EPN is 100 miles.

However, if more than one EPN is remoted in a directly connected system, the 100-mile limit applies to any two port networks. Assuming straight cable runs, suppose that a customer wants to remote one EPN 80 miles due east and another EPN due north of the local PPN. This arrangement can only be accommodated if the second EPN resides no more than 60 miles north of the PPN. This is because the direct fiber distance between the two EPNs is also limited to 100 miles.

As another example, in *switch-connected* system with numerous port networks, one EPN might be remoted 75 miles from the switch node. If this were the case, then the maximum distance that any other EPN could be remoted would be 25 miles.

Digital public-network tie-trunk facilities provide the end-to end connectivity between the port networks. For either type of port network (PPN or EPN), a TN574 DS1 Converter (DS1C) circuit pack serves as the port-network interface to the DS1 facilities. As a PPN interface, a TN574 DS1C can reside in either:

- A port carrier (in any port slot)
- A switch-node carrier (in port slot ‘‘1’’ or ‘‘21’’)

As an EPN interface, a TN574 DS1C can reside in an expansion control carrier (in any port slot).

DS1 Cabling within the Local Port Networks. See NOTE. Use the running list that accompanies the upgrade equipment to determine which cable should be connected where. The following paragraphs only provide conceptual information about wiring a DS1C interface either to an expansion interface or to a switch-node interface, not step-by-step procedures for wiring a specific G3r V4 system.

NOTE:
It is important to label every cable that you install. For details, refer to the section, *Labels for Fiber-Optic Cables*, in Appendix E of the installation manual.

See NOTE. As shown in Figure 4-18, a cable connects each DS1C either to the appropriate TN570 expansion interface (for a direct connection to another port network) or to the appropriate TN573 SN Interface (for a switched connection to another port network).

NOTE:
For the purposes of a G1 or G3i to G3r V4 upgrade, these cables will usually connect to TN570 expansion interfaces (already installed) for direct connections between the new PPN and either one or two EPNs.

On the DS1C side, a 4C retainer binds this shielded cable to the DS1C port connector. On the EI/SNI side, a 4B retainer binds the cable to the EI/SNI port connector. The DS1C-to-EI/SNI cable also provides a piggy-back connector enabling subsequent access to the public network. Table 4-5 lists the cable numbers and lengths for the possible connections.

Table 4-5. Numbers and Lengths of DS1C-to-EI/SNI Cables

Connection Type	Comcode Number	Length
Within same carrier	846448637	1 foot
Between two carriers in same port network	846448645	5.5 feet
Between two carriers in adjacent networks	846448652, and one 846885259 bracket	1 foot (used with two 9823As, & one 20-foot fiber-optic cable)

DS1 Cabling to the Public Network. See NOTE. Use the running list that accompanies the upgrade equipment to determine which cable should be connected where. The following paragraphs only provide conceptual information about wiring a DS1C interface to a wall-field block, not step-by-step procedures for wiring a specific G3r V4 system.

NOTE:
It is important to label every cable that you install. For details, refer to the section, *Labels for Fiber-Optic Cables*, in Appendix E of the installation manual.

Figure 4-18 also shows the cabling between various port networks and the cross-connect field where the public network is accessed. If already connected to either an expansion or switch-node interface, a DS1C circuit pack already resides either in an EPN expansion control carrier or in a PPN port carrier or switch-node carrier.

Depending on the traffic requirements between the two port networks, a 25-foot H600-348 cable extends from the piggy-back connector (on each DS1C-to-EI/SNI cable) to from one to four channel service units (CSUs). [This cable branches to four 15-pin subminiature D-type connectors (labeled ‘‘01’’ to ‘‘04’’) to make the CSU connections.] Then, in turn, the CSU(s) are connected to the wall-field block (corresponding to the equipment location of the DS1C) at port connections ‘‘8,’’ ‘‘7,’’ ‘‘6,’’ and ‘‘5’’ (in descending order).

Neglecting overhead, this wiring arrangement can provide PN-to-PN communication at the bandwidth of up to four DS1 spans (1.544 Mbps each). Between each port network’s wall field, the port networks communicate across leased lines in the public network.

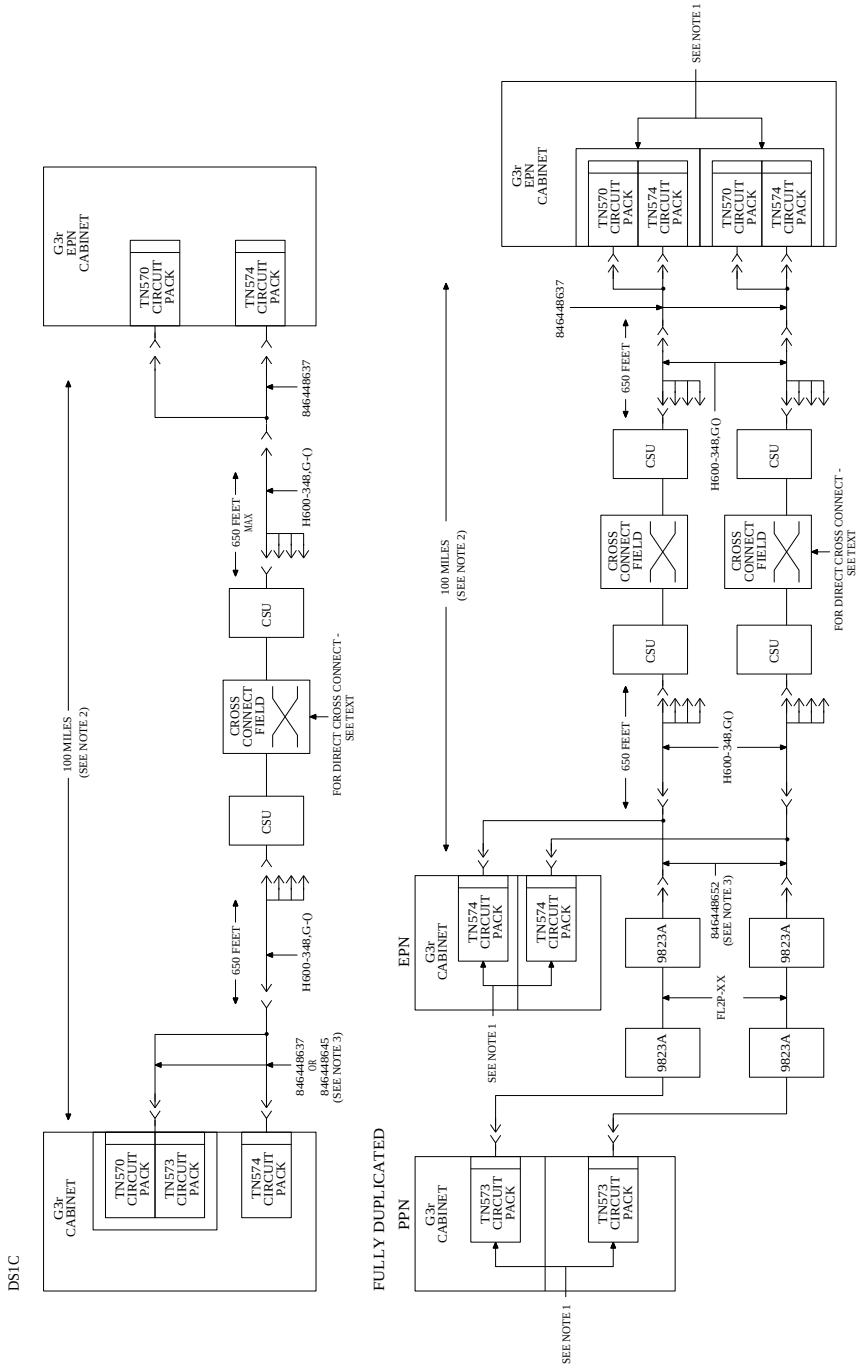

Figure 4-18. DS1 Connectivity between Remote PNs

Verify Usable Circuit-Pack Vintages

Verify that every G1 or G3i circuit pack reused in the upgrade conforms to the usable vintage requirements for a G3r V4 system (see Reference Guide for Circuit-Pack Vintages and Change Notices).

Install System Access Ports

As a prerequisite for connecting various endpoints that use EIA interfaces to the G3r V4 system, install the up to eight loop-around connections for Mode 2-to-Mode 3 (and vice versa) data conversion.

From the *outgoing* perspective of the system communicating with an EIA endpoint, these loop-around connections convert Mode 3 data (circuit-switched packet data, with undefined bit rates and packet specifications) to Mode 2 data (low-speed, usually asynchronous, data at rates of 300 to 19,200 bps) by:

- Accepting Mode 3 data off the LAN bus (from the SPE) at a TN553 Packet Data Line circuit pack, where Mode 3-to-Mode 2 conversion is done
- Routing the converted data through the cross-connect field and back to a TN726B Data Line where the equivalent Mode 2 data can access the TDM bus, for subsequent routing to an EIA endpoint

The endpoints that use these EIA interfaces and, therefore, require the Mode 2-to-Mode 3 conversion include:

- DEFINITY Communications System Generic 3 Management Applications (G3-MA)
- Remote DEFINITY Communications System Generic 3 Management Terminal (G3-MT)
- Basic Call Management System (BCMS) terminal
- Call Detail Recording Unit (CDRU)/Centralized Attendant Service Plus (CAS+)
- Property Management System (PMS)
- Printers

The following figures show this loop-around configuration and how the B25A cables are cross-connected.

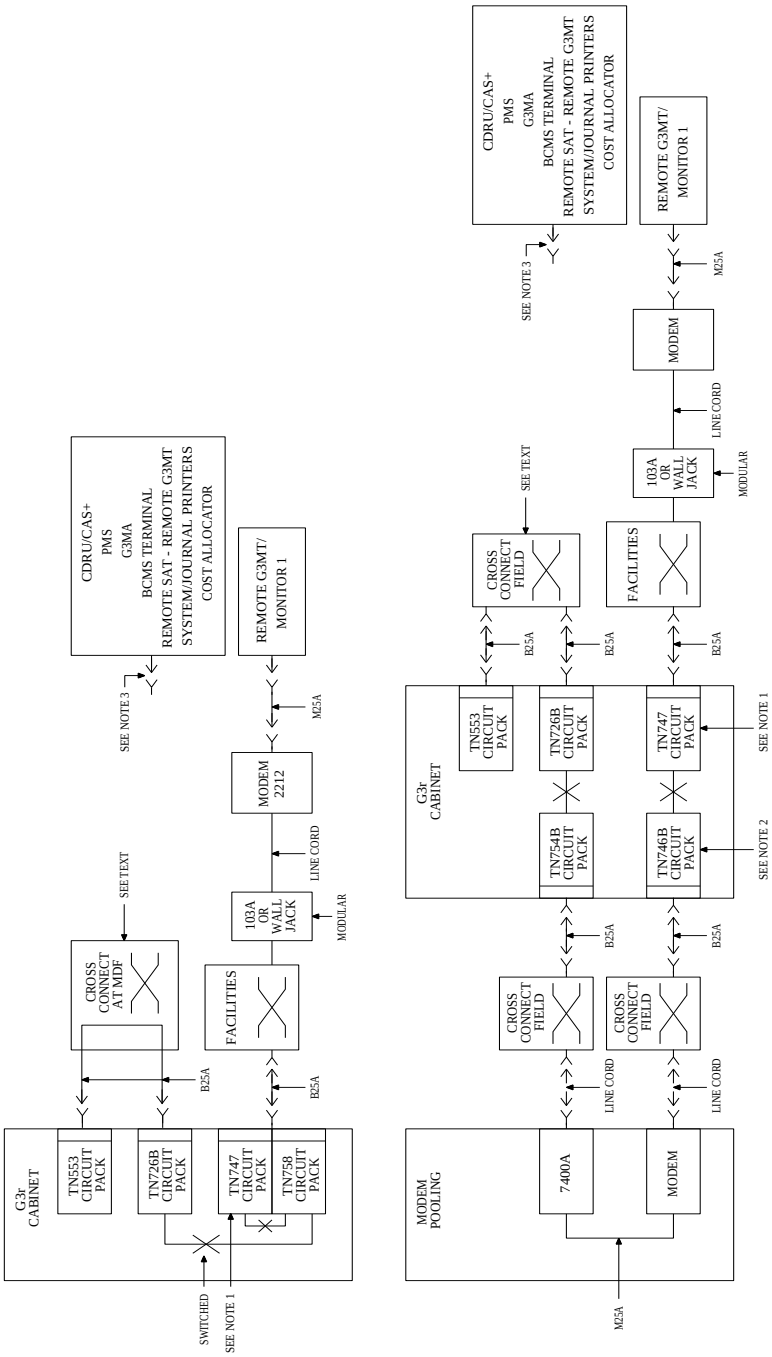

Figure 4-19. Connections: CDRU/CAS+, PMS, BCMS, Printers, G3-MA/MT

Pinouts for the TN553 and TN726B circuit packs shown cross-connected in the preceding figure are given in the table below.

Pinouts

TN553 (12 Ports)

1	26	
2	27	1
3	28	
4	29	2
5	30	
6	31	3
7	32	
8	33	4
9	34	
10	35	5
11	36	
12	37	6
13	38	
14	39	7
15	40	
16	41	8
17	42	
18	43	9
19	44	
20	45	10
21	46	
22	47	11
23	48	
24	49	12
25	50	G

TN726B (8 Ports)

1	26	Blank
2	27	
3	28	1
4	29	Blank
5	30	
6	31	2
7	32	Blank
8	33	
9	34	3
10	35	Blank
11	36	
12	37	4
13	38	Blank
14	39	
15	40	5
16	41	Blank
17	42	
18	43	6
19	44	Blank
20	45	
21	46	7
22	47	Blank
23	48	
24	49	8
25	50	Blank

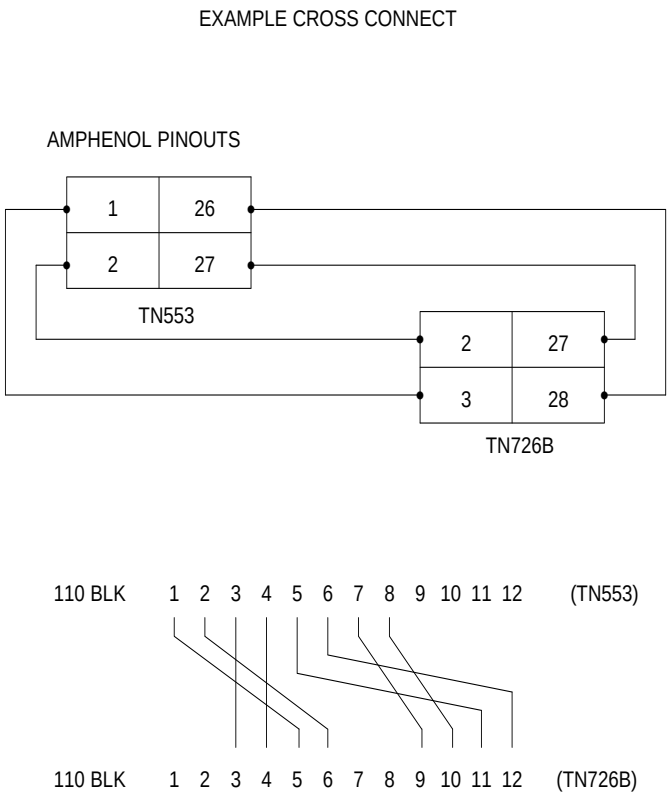

Figure 4-20. Example of Cross Connect betweem TN553 and TN726B

Reseat DEFINITY AUDIX System

See WARNING. If a DEFINITY AUDIX System resides in the system, reseat the AUDIX assembly to its backplane connectors.

WARNING:
Before inserting or removing a circuit pack from a cabinet, put on a wrist strap and attach its plug or clip to the cabinet's frame.

Remove Power-Failure Ground Strap

1. Remove the ground strap from the power-failure transfer unit.

Reboot the System

1. Connect the G3-MT to the connector labeled ''TERMINAL'' behind PPN control carrier ''A,'' or install the G3-MA according to the ''Set Up G3-MA'' chapter of *DEFINITY Communications System Generic 3 Management Applications — Operations*, 585-229-202.
2. Verify that the new G3r V4 system tape is inserted in the PPN cabinet.
3. At each EPN power-distribution unit, set the main circuit breaker to ON.
4. At the PPN power-distribution unit, set the main circuit breaker to ON.
5. The system now goes through the reset level 4 rebooting process, loading blank translations from the *disk* (not the new tape). Rebooting requires 5 to 11 minutes.
6. Enter **`reset system 4 tape`**. Press (RETURN). This command instructs the system to go through the reset level 4 rebooting process, loading the upgraded STS translations from the new *tape*. Rebooting requires 5 to 11 minutes.

   Refer to ''Initialization and Recovery'' and ''LED Interpretation'' chapters in *DEFINITY Communications System Generic 3r V4 Maintenance*, 555-230-105, Issue 4, for circuit-pack LED indications and screen displays that occur during system reboot.
7. Log in at the `login:` prompt on the G3-MT or G3-MA, and set the time to ensure that the system is booted properly.
8. Enter **`restore disk spe-a full`**. Press (RETURN). This command instructs the system to write the upgraded STS translation information from memory to the disk.
9. Enter **`reset system 4`**. Press (RETURN). This command instructs the system to go through the reset level 4 rebooting process, loading the upgraded STS translations from the *disk*. Rebooting requires 5 to 11 minutes.

   NOTE:
   Certain forms have changed for G3r V4. Upgraded G1 or G3i translations may appear on a different form, fields may have shifted within a form, and/or the names assigned to particular fields may have changed. Refer to Table 4-1 and Table 4-2, *DEFINITY Communications System Generic 3r Transition Reference*, 555-230-636, and *DEFINITY Communications System Generic 3 V4 Implementation*, 555-230-655, and make the necessary changes.

Relabel Wall Field

If not done during the installation of new PPN, relabel the wall field with the new port-network number of the upgraded G3r V4 EPN. (The STS software upgrade assigned the next port-network number, after the highest-numbered port network in the G1 or G3i system, to the upgraded EPN.)

Close Upgraded EPN Cabinet and Reconnect Cables

1. At the power-distribution unit of the upgraded EPN, set the main circuit breaker to OFF.

   NOTE:
   Powering down an EPN without powering down the PPN will set off alarms. However, these alarms should clear after power is restored to each EPN.

2. Temporarily disconnect the lightwave transceivers and fiber-optic cables, already labeled, from the appropriate carriers.
3. Replace the back doors or back panels previously removed.
4. At the EPN cabinet, reconnect the lightwave transceivers, fiber-optic cables, and the connector cables associated with the carrier being replaced.
5. Install the front door on the EPN cabinet if previously removed.

Power Up the EPN Cabinets

1. At each EPN power-distribution unit, set the main circuit breaker to ON.

   After about 40 seconds, EPN power and PPN/EPN communications return.

2. After power returns to each EPN and all trouble is cleared, verify that the EMERGENCY TRANSFER CONTROL switch is set to AUTO. This restores the system to the normal mode.

Retranslate Port Circuits

If port circuit packs in the G1 control carrier were relocated in order to put:

- A critical port circuit pack, requiring longer nominal battery holdover (e.g., a DS1 or an Announcement circuit pack), in a port slot
- A TN736, TN752, or TN755 power supply in port slots ‘‘18’’ and ‘‘19’’

- A TN570 Expansion Interface in port slot ‘‘1’’
- A TN570 Expansion Interface in port slot ‘‘2’’ (for a second EPN)

of the new expansion control carrier, verify that they were retranslated during the off-site software upgrade. If not, they must be retranslated now. Refer to *DEFINITY Communications System Generic 3 V4 Implementation*, 555-230-655, for instructions on performing the retranslations.

Rerecord Announcements

The off-site STS translation upgrade did not preserve the contents of recorded announcements. Therefore, if a TN750 Annoucement circuit pack resides in the system, any announcements that were stored on the circuit pack must be rerecorded.

Run Acceptance Tests

Refer to Chapter 11 of *DEFINITY Communications System Generic 1 and Generic 3 Installation and Test*, 555-230-104, Issue 5, and perform the appropriate tests.

Register System as G3r V4

Get the serial number of the new G3r V4 PPN, and call the INADS Database Administrator at the Technical Service Center (1-800-248-1111) to register the upgraded system as a G3r V4.

Return Replaced G1 or G3i Equipment

The G1 or G3i equipment replaced, during the upgrade to G3r V4, should be returned to AT&T according to the requirements outlined in:

BCS/Material Logistics, MSL/Attended Stocking Locations

Methods and Procedures for Basic Material Returns

The replaced G1 or G3i equipment includes:

- G1 or G3i control carrier (J58890AH), control circuit packs, and 982LS CURL
- G1 or G3i tape cartridges
- If G1 or G3i contained an EPN, TN776 expansion interfaces
- 4-series lightwave transceivers

Duplicated G1 or G3i to High-Reliability G3r V4

See NOTE. Refer to *DEFINITY Communications System Generic 1 and Generic 3 Installation and Test*, 555-230-104, Issue 5, to install the new PPN cabinet.

NOTE:
During the wall-field wiring of the PPN installation, the wall field can also be relabeled with the new port-network number of the G1 or G3i PPN to be upgraded. (The STS software upgrade assigned the next port-network number, after the highest-numbered port network in the G1 or G3i system, to the upgraded G3r V4 EPN.)

If a second or third EPN is being added, refer to *DEFINITY Communications System Generic 1 and Generic 3 Installation and Test*, 555-230-104, Issue 5, to install the new EPN.

Upgrade Cabinets

The existing PPN cabinet is always upgraded to an EPN. An existing EPN cabinet is also always upgraded to an EPN. Upgrade the cabinets using the following procedures.

A G1 or G3i PPN is upgraded to a high-reliability G3r V4 EPN by:

- Removing the control carrier in position ‘‘A’’
- Installing the J58890AF expansion control carrier in position ‘‘A’’
- Removing the control carrier in position ‘‘B’’
- Installing the J58890BB-3 port carrier in position ‘‘B’’
- Adding the G3r V4 circuit packs
- Restructuring the port circuits as required

A duplicated G1 or G3i EPN (either multicarrier or single-carrier) is upgraded to a high-reliability G3r V4 EPN by:

- Removing the TN776 expansion interface circuit packs (from slots 2A01 and 2B01).
- Installing the G3r V4 TN570 expansion interface circuit packs (in slots 2A01 and 2A02).
- Restructuring the port circuits as required

Prerequisite Hardware

The equipment in Table 4-6 *must* be on-site before the upgrade begins. Ensure that the tapes are G3r V4 tapes.

To place a claim for missing equipment, as part of the Streamlined Implementation process, call "1-800-772-5409," and respond to the call prompter.

Table 4-6. Required Hardware

Equipment	Description	Quantity
PEC 6300-07X	Processor Port Network	1
J58890AF	Expansion Control Carrier	1
J58890BB-3	Port Carrier	1
106647985	TN775B Maintenance	1
103281788	TN570 Expansion Interface	w/o CSS: 2 or 6 (Note 1) w/CSS: 1 per port network
103281812	TN573 Switched Node Interface	w/CSS: 1 per port network
J58890TF	Tape Cartridge	4
105691158	CFY1 Current Limiter	1
63300A	FL2P-P-XX Fiber Cable	1 or 3 (Note 2)
106455348 or 106455363	9823-A Lightwave Transceiver 9823-B Lightwave Transceiver	w/o CSS: 2 or 6 (Note 3) w/CSS: 2 per EPN w/o CSS: 2 or 6 (Note 3) w/CSS: 2 per EPN

Notes:

1. Depending on the number of G3r V4 EPNs. Two are required for a high-reliability switch with two port networks; six with three port networks. Either one or four TN570s are shipped loose with the EPN equipment. The factory has installed either one or two TN570s in the new PPN.
2. Depending on the number of G3r V4 EPNs. Two or six are required if the PPN and EPN(s) are remotely located.
3. One pair for each fiber connection. For each connection, one 9823-type lightwave transceiver is installed in an EPN, and a like transceiver in the PPN. 4E transceivers cannot be reused from the upgraded G1 or G3i system. Additional 9823-type transceivers, ordered separately, are also shipped loose with the EPN equipment.

Required Tools

The following tools and items may be required during the upgrade:

- High-intensity flashlight or AC drop light
- 3/8-inch flat-blade screwdriver with a 10-inch shank (minimum)
- 5/16-inch and 1/4-inch sockets with a ratchet and 10-inch extension
- Power screwdriver (optional)
- Long-nose pliers to disconnect grounding straps and straighten backplane pins
- Static-proof or original circuit-pack packaging for transporting circuit packs
- Labels for identifying the port circuit packs and cables attached to the rear of cabinets
- Receptacle for holding approximately 100 self-tapping screws
- 12 spare #12 and #10 self-tapping screws
- 4 spare carrier grounding straps
- Authorized wrist grounding strap
- Repair kit for backplane pins (KS-22876 L2 or equivalent)
- One copy of each of the following manuals:
  - *DEFINITY Communications System Generic 3r V4 Maintenance*, 555-230-105, Issue 4
  - *DEFINITY Communications System Generic 3 V4 Implementation*, 555-230-655

Preventive Maintenance

During the G3r V4 upgrade, follow routine preventive maintenance procedures on the system to be upgraded. For information about the procedures and necessary equipment, refer to the “Preventive Maintenance’’ section in *DEFINITY Communications System Generic 3r V4 Maintenance*, 555-230-105, Issue 4.

Verify System Status

Before proceeding, the system should be examined for alarms, and every problem should be corrected. The system must be alarm-free.

Label Cables

To make reconnecting the cables simpler and more reliable, label both ends of the connector cables associated with the carrier to be removed (if not already labeled).

Shut Down DEFINITY AUDIX System

1. See WARNING. If a DEFINITY AUDIX System resides in the system to be upgraded, shut down the AUDIX assembly and allow the disk to completely spin down.

   WARNING:
   Neglecting to shut down an AUDIX assembly before powering down the system cabinet where it resides can damage the AUDIX disk.

2. See WARNING. To avoid an unexpected AUDIX reboot after an unplanned switch reboot, unseat the AUDIX assembly from its backplane connectors.

   WARNING:
   Before inserting or removing a circuit pack from a cabinet, put on a wrist strap and attach its plug or clip to the cabinet's frame.

Power Down G1 or G3i System

1. See CAUTION. At the PPN power-distribution unit, set the main circuit breaker to OFF.

   CAUTION:
   Powering down the control cabinet will cause important system data, such as BCMS data, records of queued ACD calls, Automatic Wakeup requests, and Do Not Disturb requests to be lost. Refer to DEFINITY Communications System Generic 1, Generic 3i, Generic 3i-Global, and Generic 3i V4 Maintenance, 555-204-105, Issue 7, for information about preparing the system for a power down. BCMS data cannot be stored to or retreived from tape.

2. At the EPN power-distribution unit, set the main circuit breaker to OFF.

Install Power-Failure Transfer Ground Strap

CAUTION:
To avoid contaminating single-point ground, do not connect the ground strap while the system is powered up.

1. Connect a strap's lead either to pin 49 of the connecting block or to pin 49 of the CAP (cable access panel) associated with the power-failure transfer panel.
2. Route the other lead to an approved ground source.
3. Connect the lead to the approved ground source.

Remove Doors and Panels and Disconnect Cables

Remove the front door from the cabinet (if desired).

4. With the cable retainer in front of you and the part number visible (4B or 4C), locate the slot that is almost vertical. (This slot is adjacent to the part number.) Insert a flat-blade screwdriver with a wide blade (1/4-inch recommended) into the slot, and twist the screwdriver. The retainer will snap open easily so that the cable can be removed.
5. Disconnect previously labeled cables associated with the carrier to be removed.
6. Behind a ‘‘DEFINITY style’’ cabinet, remove the back doors from the cabinet.
7. Behind a previously upgraded cabinet, remove all of the back panels. (Two different types of screws hold the back panels to the cabinet. The #10 screws can be removed with a screwdriver or a 1/4-inch socket. The #12 screws can be removed with a screwdriver or a 5/16-inch socket.)

Remove Circuit Packs from Carriers A and B

1. To ensure that circuit packs and power units in the ‘‘A’’ and ‘‘B’’ carriers are properly replaced, label each component with its slot number.
2. Disconnect the power cords from the power units in the ‘‘A’’ and ‘‘B’’ carriers.
3. See WARNING. Remove all circuit packs and power units from carrier ‘‘A.’’ Store the circuit packs in the static-proof packaging.
4. See WARNING. Remove all circuit packs from carrier ‘‘B.’’ Store the circuit packs in the static-proof packaging.

   WARNING:
   Before inserting or removing a circuit pack from a cabinet, put on a wrist strap and attach its plug or clip to the cabinet’s frame.

5. Remove the circuit-pack blanks from slots that do not contain circuit packs.
6. Remove the front trim plate from the ‘‘B’’ carrier by pulling straight off. Then remove the front trim plate from the ‘‘A’’ carrier.

Remove Control Carriers A and B

1. See the following CAUTION and NOTE. Remove the TDM/LAN cable from between the ‘‘A’’ and ‘‘B’’ carriers (see Figure 4-21). This cable will be reused.
2. See CAUTION and NOTE. Disconnect one end of the TDM/LAN cable (between the ‘‘A’’ and ‘‘D’’ carriers) from the ‘‘A’’ carrier). Leave the other end connected to the ‘‘D’’ carrier, and move the cable into a position so that it will not interfere with removing the ‘‘A’’ carrier.
3. See CAUTION and NOTE. Disconnect one end of the TDM/LAN cable (between the ‘‘B’’ and ‘‘C’’ carriers) from the ‘‘B’’ carrier. Leave the other end connected to the ‘‘C’’ carrier, and move the cable into a position so that it will not interfere with removing the ‘‘B’’ carrier.

CAUTION:
When removing the TDM/LAN cables from a previously upgraded carrier, be careful that none of the short pieces of shrink tubing come off the four corner pins of the pin-field block. Otherwise, when the new equipment is connected, -48 volts could short to ground.

NOTE:
Note the position of the TDM/LAN cable before disconnecting.

4. Remove the eight ground straps from between the ‘‘A’’ and ‘‘B’’ carriers (see Figure 4-22. Retain these straps since they will reconnected to the new ‘‘A’’ and‘‘B’’ carriers.
5. Disconnect one end of the eight ground straps (between the ‘‘A’’ and ‘‘D’’ carriers) from the ‘‘A’’ carrier. These straps will be reconnected to the new ‘‘A’’ carrier.
6. Disconnect one end of the eight ground straps (between the ‘‘B’’ and ‘‘C’’ carriers) from the ‘‘B’’ carrier. These straps will be reconnected to the new ‘‘B’’ carrier.
7. Disconnect the ‘‘P1’’ (small 9-pin) connector and the ‘‘P2’’ (large 37-pin) connector from the ‘‘A’’ carrier (see Figure 4-23). Move the cables into a position where they will not interfere with removing the carrier.
8. Slide the latch up, and disconnect the ‘‘P1’’ (small 9-pin) connector from the ‘‘B’’ carrier. Move the cable into a position where it will not interfere with removing the carrier.

9. Disconnect and remove the ICC cables (see Figure 4-21). They will not be reused.
10. Remove the fan trim plate by pulling straight off.
11. Clean or replace the air filter (403326820) if necessary.
12. In front of carrier, remove the four screws (top two first) holding the ‘‘B’’ carrier to the cabinet frame. Use a long-handle screwdriver or 5/16-inch socket with a 10-inch extension.
13. Behind the carrier in a ‘‘DEFINITY style’’ cabinet, remove the two screws holding the ‘‘B’’ carrier’s rear connector panel to the cabinet frame.
14. See CAUTION. Slide the carrier forward 1 to 2 inches; then, from the back, be sure that no cables or wiring harnesses are caught on the cabinet/carrier framework.

    CAUTION:
    Cables and wiring harnesses can be damaged if they catch on the framework and if too much pressure is applied in removing the carrier.

15. Remove the carrier by sliding it out the front of the cabinet.
16. Repeat Steps 12 through 15 for the ‘‘A’’ carrier.

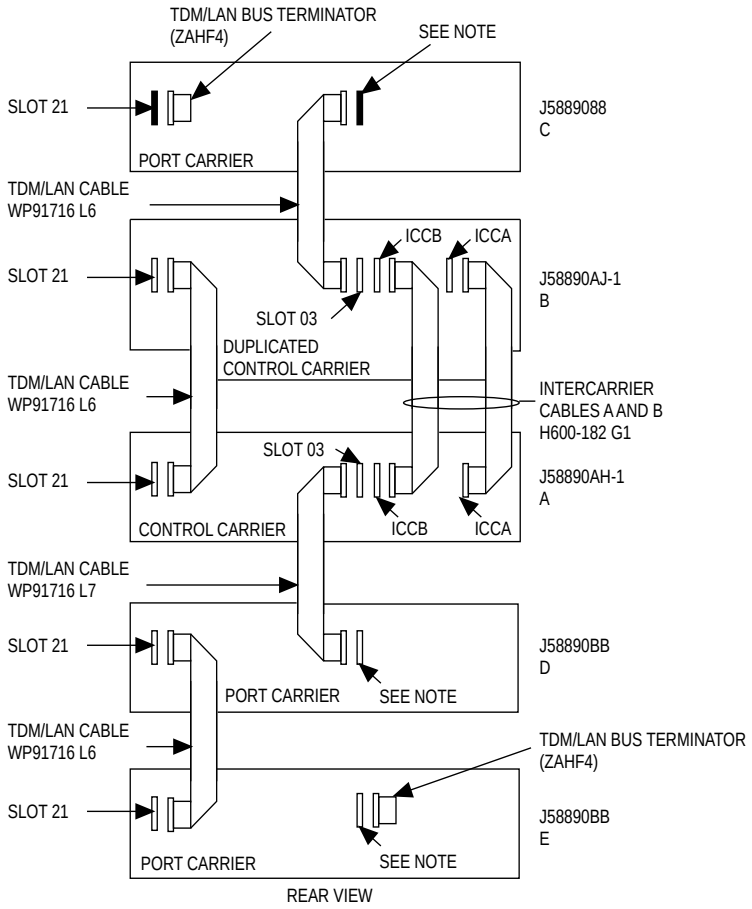

NOTE:

ON PORT CARRIER J58890BB-1, CONNECT THE TDM CABLE OR TDM TERMINATOR TO SLOT 02. ON PORT CARRIERS J58890BB-2 AND J58890BB-3, CONNECT THE TDM CABLES OR TDM TERMINATOR TO SLOT 01. IF THE PORT CARRIER HAS J58890BB-1 AND J58890BB-2 STENCILLED ON IT, TREAT IT AS A J58890BB-1.

Figure 4-21. TDM/LAN Connections for Duplicated G1 or G3i PPN

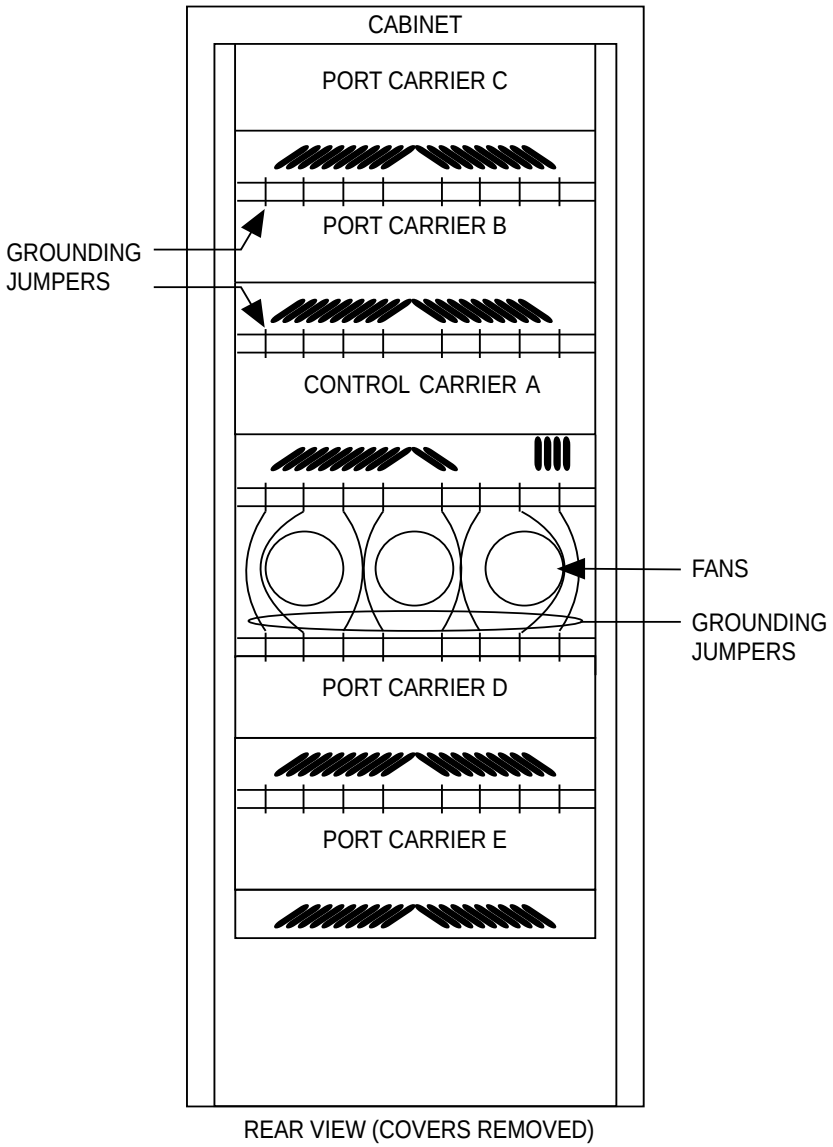

Figure 4-22. Locations of Grounding Jumpers

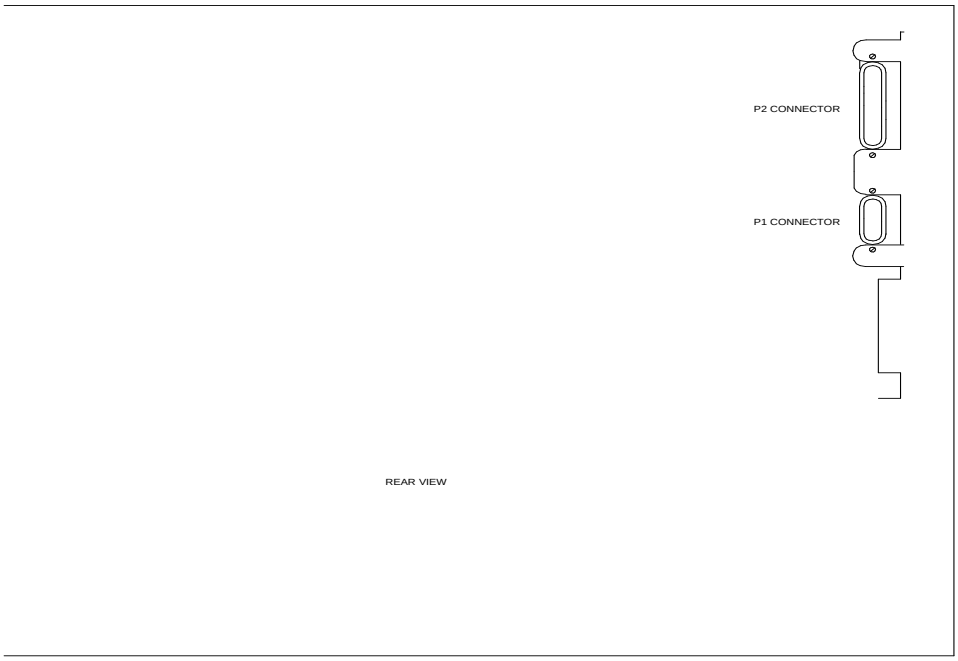

Figure 4-23. Location of P1 and P2 Connectors

Prepare the New A and B Position Carriers

1. Visually inspect the new carriers for any damage. Verify that the backplane pins are not bent.
2. Place the expansion control carrier on the floor so that the rear of the carrier faces up.
3. Install the CFY1 current limiter (CURL) on the ‘‘A’’ carrier to the pin-field block marked ‘‘CURL.’’ The CURL is inserted with the components on the left side as viewed from the rear.
4. At the rear connector panel, determine which connectors will have a cable attached, and install a 4B cable retainer on each of these connectors.

Install the New A and B Position Carriers

1. Install the J58890AF-1 expansion control carrier in position ‘‘A’’ by lining up the plastic alignment tips on the top rear of the carrier with the screw holes in the cabinet. These alignment tips will support the carrier while the screws are being replaced. Ensure that the power cords are properly placed in the slots at the sides of the carrier.
2. See CAUTION. Fasten the carrier into position with four self-tapping screws saved from the removal of the old carrier.

   CAUTION:
   Carefully realign the threads on the self-tapping screws by turning them clockwise a turn or two before tightening them to avoid stripping the threads out of the framework.

3. Behind the carrier in a ‘‘DEFINITY style’’ cabinet, replace the two screws saved from the removal of the old carrier.
4. Install the J58890BB-3 port carrier in position ‘‘B’’ by lining up the plastic alignment tips on the top rear of the carrier with the screw holes in the cabinet. These alignment tips will support the carrier while the screws are being replaced. Ensure that the power cords are properly placed in the slots at the sides of the carrier.
5. See CAUTION. Fasten the carrier into position with four self-tapping screws saved from the removal of the old carrier.
6. Connect the ‘‘P2’’ and ‘‘P1’’ (large and small) connectors to the ‘‘A’’ carrier. If necessary, to get enough slack in the cables, cut the tie wrap holding the intercabinet cables from the upright in the area of the carrier being installed. Snap the connector lock into place to ensure the connection is properly made (see Figure 4-23).

7. Connect the ‘‘P1’’ (small) connector to the ‘‘B’’ carrier. To get enough slack in the cables, cut the tie wrap holding the intercabinet cables from the upright in the area of the carrier being installed. Snap the connector lock into place to ensure the connection is properly made (see Figure 4-23).
8. Connect the eight ground straps from the ‘‘D’’ carrier to the new ‘‘A’’ carrier (see Figure 4-22). These straps were left connected to the ‘‘D’’ carrier.
9. Connect the eight ground straps from the ‘‘C’’ carrier to the new ‘‘B’’ carrier (see Figure 4-22). These straps were left connected to the ‘‘C’’ carrier.
10. Install the eight ground straps between the new ‘‘A’’ and ‘‘B’’ carriers (see Figure 4-22). These straps were removed from the old carriers.
11. See NOTE. For an AC-powered expansion control carrier, install the two new carrier-ground straps. One strap connects ground point ‘‘1’’ to the A-carrier frame (on the right side), and the other connects ground point ‘‘8’’ to the A-carrier frame (on the left side).

    NOTE:
    DC-powered carriers do not use these carrier-ground straps.

12. Connect the loose end of the TDM/LAN cable (between the ‘‘A’’ and ‘‘D’’ carriers) to the pin-field block marked ‘‘TDM’’ on the right side of the ‘‘A’’ carrier (see Figure 4-24 and Table 4-7). The other end remained connected to the ‘‘D’’ carrier when the old carrier was removed.
13. Connect the loose end of the TDM/LAN cable (between the ‘‘B’’ and ‘‘C’’ carriers) to the pin-field block marked ‘‘TDM’’ on the right side of the ‘‘B’’ carrier. The other end remained connected to the ‘‘C’’ carrier when the old carrier was removed.
14. Connect the TDM/LAN cable between the ‘‘A’’ and ‘‘B’’ carriers. The cable is connected to the ‘‘A’’ and ‘‘B’’ carriers at the pin-field blocks marked ‘‘TDM’’ on the left side of each carrier.

Table 4-7. TDM/LAN Connections

‘‘J’’ Number	Carrier Type	LHS Slot	RHS Slot
J58890BB-1	Port	21	02
J58890BB-2	Port	21	01
J58890BB-3	Port	21	01
J58890AF	EPN Control ‘‘A’’	21	02

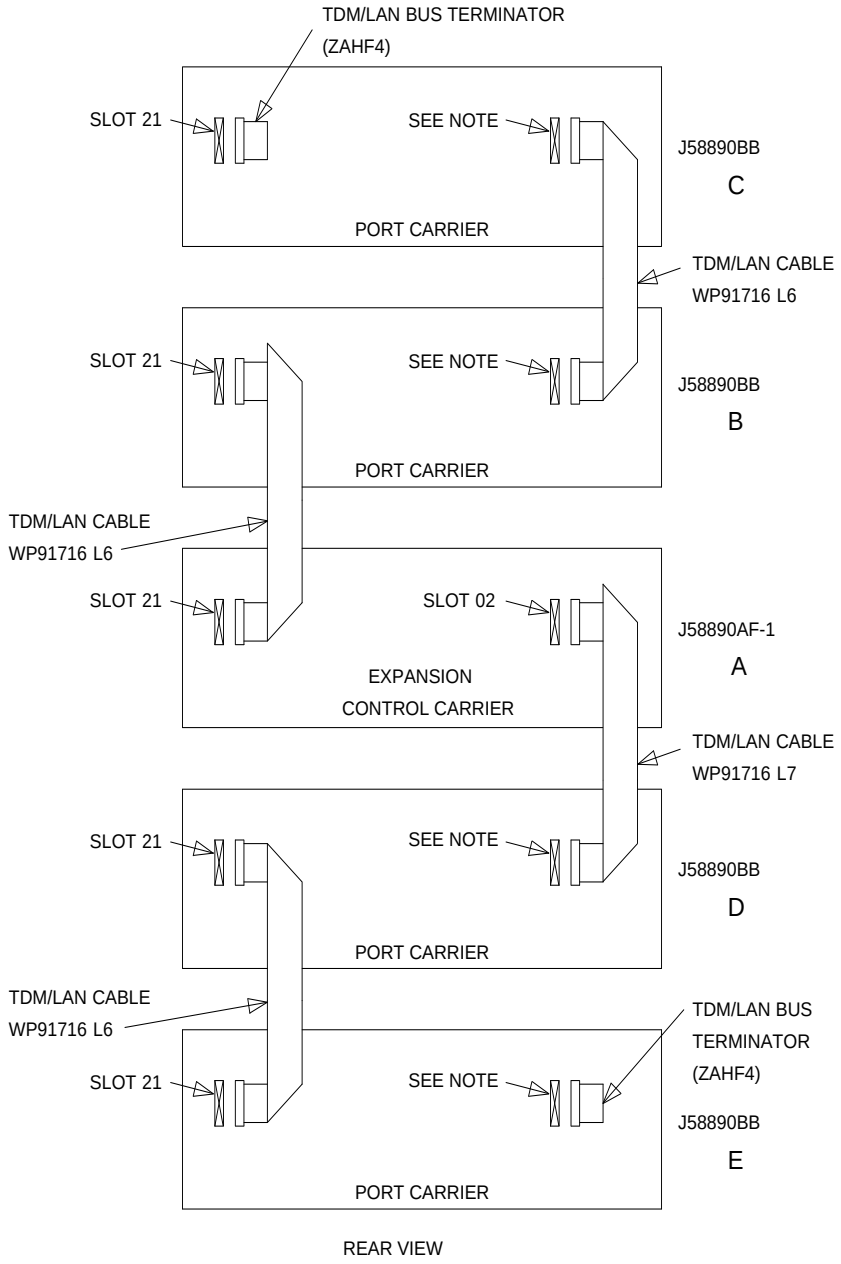

NOTE:

ON PORT CARRIER J58890BB-1, CONNECT THE TDM/LAN CABLE OR TDM/LAN TERMINATOR TO SLOT 02. ON PORT CARRIERS J58890BB-2 AND -3, CONNECT THE TDM/LAN CABLES TO SLOT 01.

Figure 4-24. TDM/LAN Connections for High-Reliability G3r V4 EPN

15. Install the front trim plates; first on the ‘‘A’’ carrier, and then on the ‘‘B’’ carrier.

16. Install the power units (removed from G1 or G3i) into the ‘‘A’’ carrier. There are four different pairs of power units available. They are the 631AR1 and 631BR1, the 631WA1 and 631WB1, the 631DA1 and 631DB1, and the 644A and 645B.

    Do not interchange the physical locations of the units. The 631AR1, 631WA1, 631DA1 or 644A are installed in the left side, while the 631BR1, 631WB1, 631DB1 or 645B are installed in the right side (see Figure 4-25).

17. If the expansion control carrier contains a 631BR1, 631WB1, or 645B power unit, install the previously removed TN736 power unit in port slots ‘‘18’’ and ‘‘19’’ of the carrier (adjacent to the 631BR1, 631WB1, or 645B). If the system is equipped for neon message waiting, a TN752 or TN755 power unit must be used.

    NOTE:
    The TN736 is not required when the 631DB1 or 645B power unit is used in the J58890AH control carrier or the J58890BB-2 or J58890BB-3 port carriers. It is required in the J58890BB-1 port carrier regardless of which 631 power unit is provided. Use the TN752 or TN755 if the system is equipped with neon message waiting.

18. Connect the power cords to the power units. The power cords are the white cables equipped with plugs that are run through the slots in the front of each carrier (see Figure 4-26).

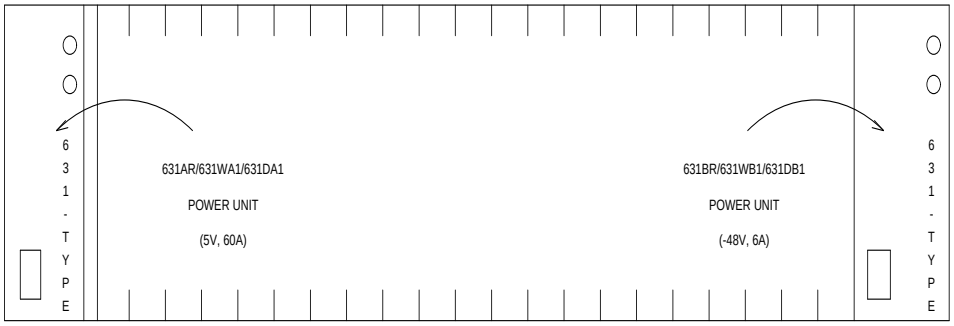

Figure 4-25. Locations of Power Units

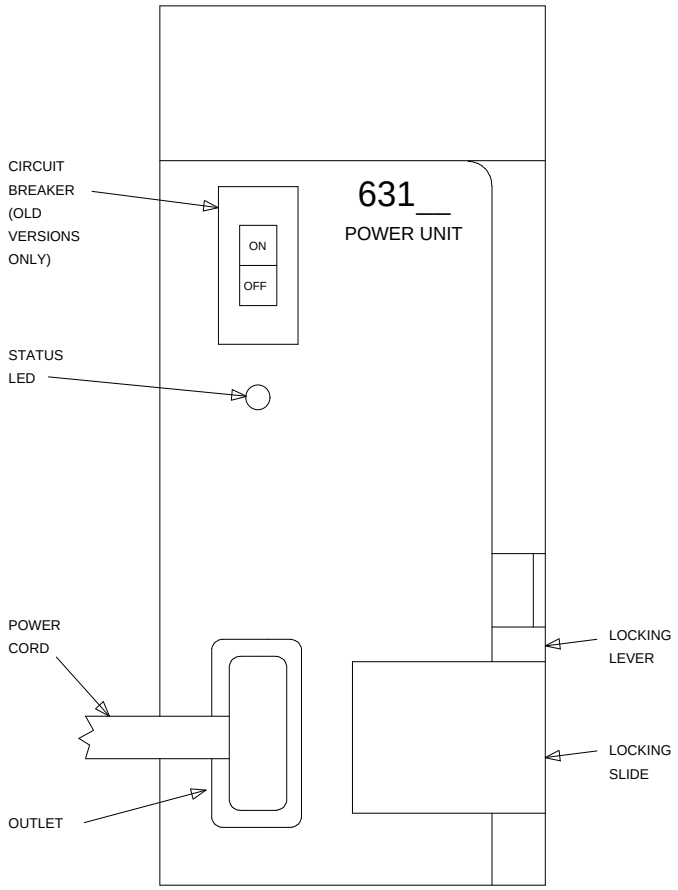

Figure 4-26. 631-Type Power Unit

Install Circuit Packs

1. See WARNING. Install the new G3r V4 control circuit packs into carriers ‘‘A’’ and ‘‘B.’’ Use the following figure, the new decal, and the annotated ‘‘list configuration all’’ (provided with the G3r V4 tape) as a guide.

   WARNING:
   Before inserting or removing a circuit pack from a cabinet, put on a wrist strap and attach its plug or clip to the cabinet’s frame.

2. See preceding WARNING and following WARNING and NOTE. Install the port circuit packs previously removed into the ‘‘A’’ carrier using the decal and the annotated ‘‘list configuration all’’ (provided with the G3r V4 tape) as a guide.

   WARNING:
   These installed port circuit packs must conform to the usable vintage requirements for a G3r V4 system (see Reference Guide for Circuit-Pack Vintages and Change Notices).

   NOTE:
   Since the new G3r V4 expansion control carrier has eleven more port slots than the removed control carrier, there should not be a need to move and retranslate these circuit packs.

   For G1 systems without an EPN, if a port circuit pack was located in slot ‘‘01’’ of control carrier ‘‘A,’’ the STS software upgrade retranslated this circuit pack to occupy an empty port slot in the new expansion control carrier.

3. See preceding WARNINGS and NOTE. Install the port circuit packs previously removed into the ‘‘B’’ carrier using the decal and the annotated ‘‘list configuration all’’ (provided with the G3r V4 tape) as a guide.

4. For a directly connected high-reliability G3r V4 system with two port networks, ensure that the PPN and this EPN are both equipped with a TN570 expansion interface circuit pack.

   For a directly connected system with three port networks, ensure that the PPN and each EPN have two TN570s.

   For a CSS-connected system, ensure that each port network has a TN570 and that the switch node carrier has one TN573 for each port network.

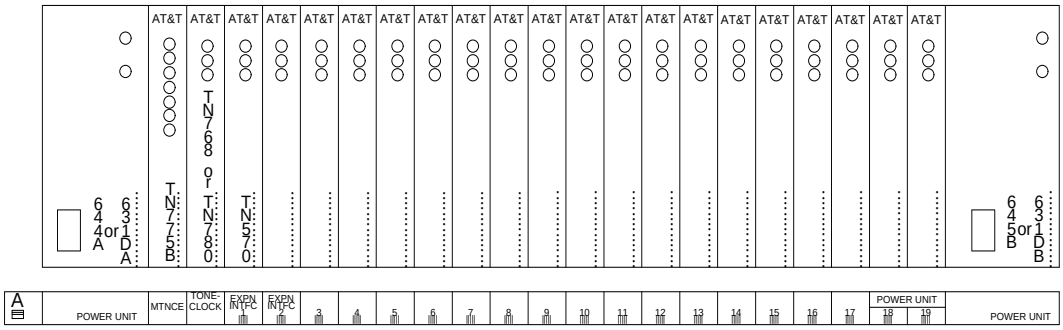

Figure 4-27. Circuit-Pack Locations in G3r V4 Expansion Control Carrier

Interconnect Port Networks — High-Reliability System

See NOTES. Fiber-optic cabling terminated to the various lightwave transceivers can interconnect port networks (PNs) to various maximum distances:

- 9823A transceivers can support fiber connections up to 4,900 ft. (about 0.9 miles)
- 9823B transceivers can support fiber connections up to 25,000 ft (about 4.7 miles)

When available and whenever the desired distance between the port networks is less than 25,000 feet, fiber is the preferred medium for interconnecting port networks, providing significantly higher-bandwidth connectivity than DS1C remoting.

NOTE:
As always, these distance limitations are approximate measurements of the *actual* fiber right-of-way (not of the shortest linear distance) between the two endpoints.

NOTE:
It is important to label every cable that you install. For details, refer to the section, *Labels for Fiber-Optic Cables*, in Appendix E of the installation manual.

NOTE:
Throughout these procedures, remember to keep track of which fiber is attached to which connector on each lightwave transceiver. This section provides figures offering the suggested way of making these connections.

The connectors on the lightwave transceivers are labeled either “TX” (transmit) or “RX” (receive), while the fibers attached to each connector are numbered either ‘‘1’’ or ‘‘2.’’ A viable fiber connection is only made when both fibers in each cable (that is, ‘‘1’’ and ‘‘2’’) route from the “TX” connector of a port network to the “RX” connector of its adjacent port network. For an example, refer to Figure 4-29.

NOTE:
For implementation details, refer to the ‘‘Fiber Link Administration’’ sections of *DEFINITY Communications System Generic 3 V4 Implementation*, 555-230-655.

Collocated Port Networks

For a high-reliability system with one collocated expansion port network, one fiber-optic cable (FL2P-P-XX) and two lightwave transceivers (9823-type) are required to directly connect the networks.

For a high-reliability system with two collocated expansion port networks, three fiber-optic cables (FL2P-P-XX) and six lightwave transceivers (9823-type) are required to directly connect the networks.

NOTE:
For the FL2P-P-XX fiber-optic cable, the -XX suffix represents the length of the cable in feet. Based on floor-plan considerations, the length of these cables may vary. However, 20-foot cables are normally adequate for a G3r V4 with two port networks.

See NOTE. For collocated cabinets, the fiber-optic cables should be routed directly from the PPN to the EPN cabinet. If, for this upgrade, a ''DEFINITY style'' PPN cabinet is collocated with another ''DEFINITY style'' EPN cabinet, the preferred routing is to run the cables *up* the cable tray and out the top of the PPN cabinet. The cables are then run to the other cabinet, through the top of the cabinet, and down the cable tray to the desired carrier level.

NOTE:
Refer to Appendix E of *DEFINITY Communications System Generic 1 and Generic 3 Installation and Test*, 555-230-104, Issue 5, for additional guidelines about fiber routing.

If, for this upgrade, a ''DEFINITY style'' PPN cabinet is collocated with either a small cabinet, medium cabinet, or single-carrier cabinet stack, the preferred routing is to run the cables *down* the cable tray and out the bottom of the PPN cabinet. The cables are then run to the EPN cabinet and up the outside of the rear panels to the desired carrier level.

NOTE:
Within this chapter, the step-by-step instructions will assume that every port network in the system is a ''DEFINITY style'' cabinet.

Fiber-Remoted Port Networks

For a high-reliability system with one fiber-remoted expansion port network, two fiber-optic cables (FL2P-P-XX), two lightwave transceivers (9823-type), and two lightwave-interface units (provided by the PSC) are required.

For a high-reliability system with two fiber-remoted expansion port networks, six fiber-optic cables (FL2P-P-XX), six lightwave transceivers (9823-type), and six lightwave-interface units (provided by the PSC) are required.

For fiber-remoted cabinets, the cables should be routed down the cable tray and out the bottom of the cabinet to the cross-connect field where the lightwave-interface units are located.

DS1C-Remoted Port Networks

For a high-reliability system with one DS1C-remoted expansion port network, two DS1C circuit packs (TN574), two DS1C-to-EI cables (846448637 and/or 846448645), two H-600-348 cables, from one to four pairs of channel service units (CSUs), and from one to four pairs of wall-field cables (provided with the CSUs) are required.

For a high-reliability system with two DS1C-remoted expansion port networks, this arrangement requires:

- Six DS1C circuit packs (TN574)
- Six DS1C-to-EI cables (846448637 and/or 846448645)
- Six H-600-348 cables
- Three, six, nine, or twelve pairs of channel service units (CSUs)
- Three, six, nine, or twelve pairs of wall-field cables (provided with the CSUs)

In any case, use cable ties to secure the cable against the walls of the cable tray at the cable-tie positions built into the trays.

For Either One or Two Collocated Expansion Port Networks

1. Behind port carrier C of PPN cabinet 1 (see Figure 4-28 through Figure 4-31):
    - Install a 9823-type lightwave transceiver on cable connector at slot 1C02.
    - Connect one end of the fiber-optic cable to the lightwave transceiver, just installed, at slot 1C02.
    - Delicately attach the fiber-optic cable (with cable ties) to the wall of the cable tray at the built-in cable-tie positions.
2. Behind control carrier A of EPN cabinet 2:
    - Install the same kind (either 9823-A or 9823-B) of lightwave transceiver on cable connector at slot 2A01.
    - Connect the other end of the fiber-optic cable to the lightwave transceiver, just installed, at slot 2A01.
    - Delicately attach the fiber-optic cable (with cable ties) to the wall of the cable tray at the built-in cable-tie positions.
    - At the top of the cabinet, coil up the surplus length of fiber-optic cable, and delicately attach the coil to the wall of the cable tray.

For Two Collocated Expansion Port Networks

1. Behind port carrier D of PPN cabinet 1:
   - Install a 9823-type lightwave transceiver on cable connector at slot 1D02.
   - Connect one end of the fiber-optic cable to the lightwave transceiver, just installed, at slot 1D02.
   - Delicately attach the fiber-optic cable (with cable ties) to the wall of the cable tray at the built-in cable-tie positions.
2. Behind control carrier A of EPN cabinet 3:
   - Install the same kind (either 9823-A or 9823-B) of lightwave transceiver on cable connector at slot 3A01.
   - Connect the other end of the fiber-optic cable to the lightwave transceiver, just installed, at slot 3A01.
   - Delicately attach the fiber-optic cable (with cable ties) to the wall of the cable tray at the built-in cable-tie positions.
   - At the top of the cabinet, coil up the surplus length of fiber-optic cable, and delicately attach the coil to the wall of the cable tray.
3. Behind control carrier A of EPN cabinet 2:
   - Install a 9823-type lightwave transceiver on cable connector at slot 2A02.
   - Connect one end of the fiber-optic cable to the lightwave transceiver, just installed, at slot 2A02.
   - Delicately attach the fiber-optic cable (with cable ties) to the wall of the cable tray at the built-in cable-tie positions.
4. Behind control carrier A of EPN cabinet 3:
   - Install the same kind (either 9823-A or 9823-B) of lightwave transceiver on cable connector at slot 3A02.
   - Connect the other end of the fiber-optic cable to the lightwave transceiver, just installed, at slot 3A02.
   - Delicately attach the fiber-optic cable (with cable ties) to the wall of the cable tray at the built-in cable-tie positions.
   - At the top of the cabinet, coil up the surplus length of fiber-optic cable, and delicately attach the coil to the wall of the cable tray.

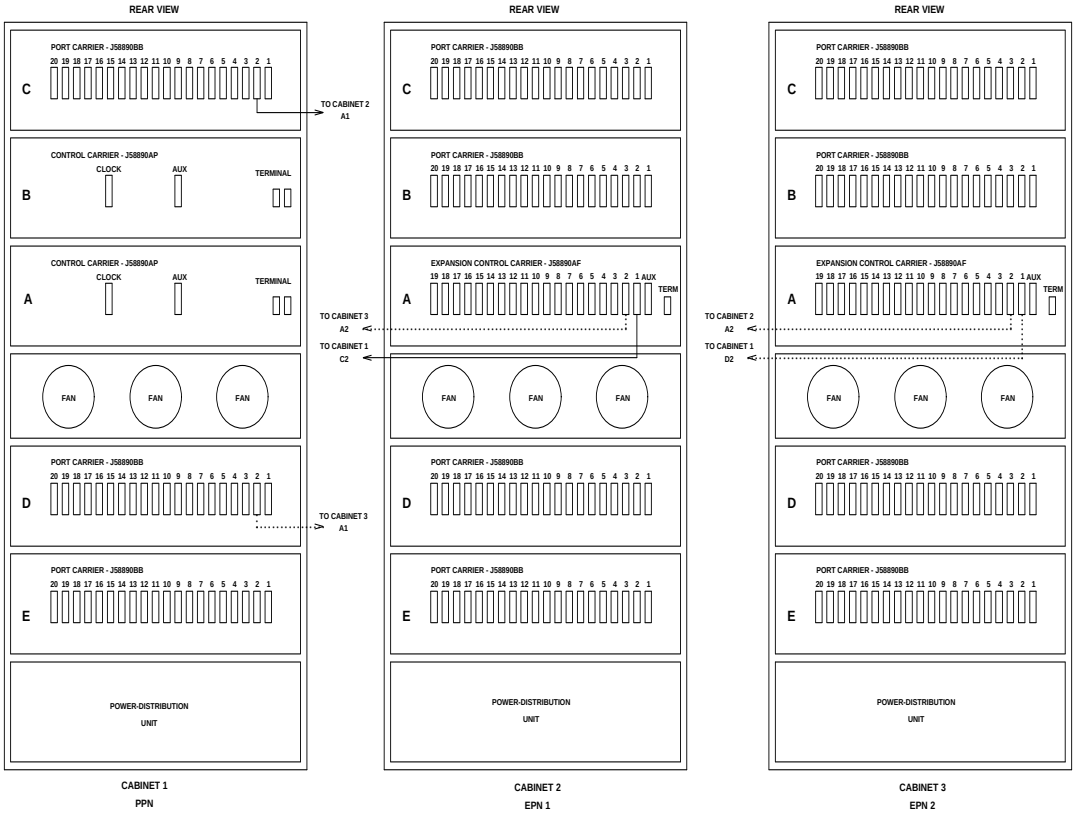

Figure 4-28. High-Reliability G3r V4 with Two or Three Port Networks

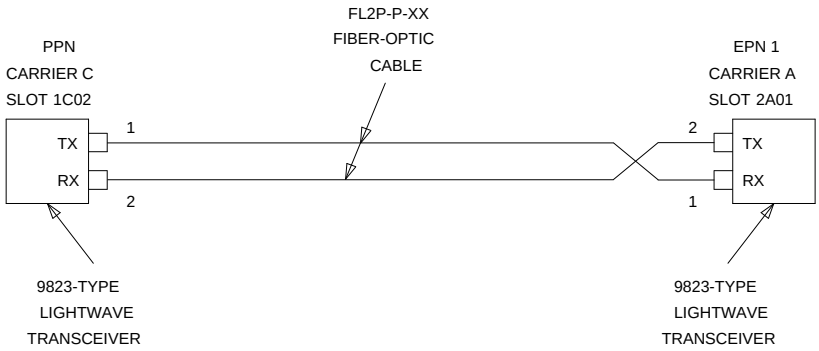

Figure 4-29. Fiber-Optic Connections PPN to EPN1

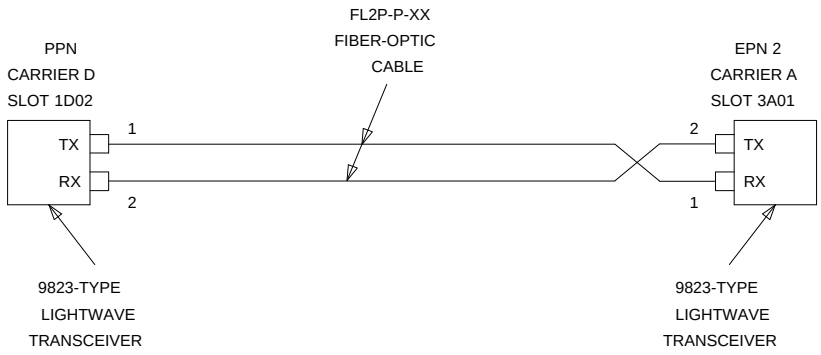

Figure 4-30. Fiber-Optic Connections PPN to EPN2

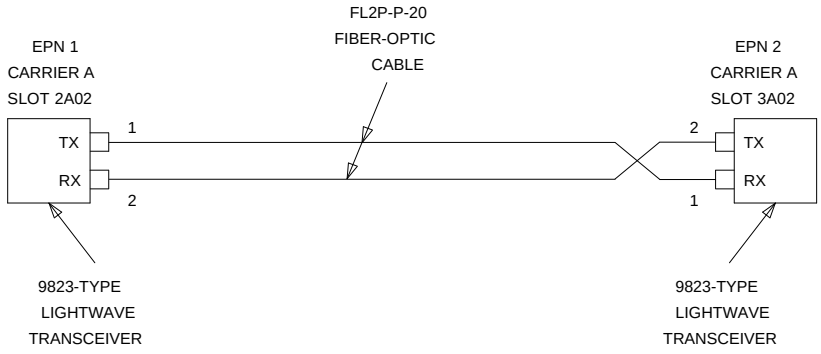

Figure 4-31. Fiber-Optic Connections EPN1 to EPN2

For Either One or Two Fiber-Remoted Expansion Port Networks

1. Behind port carrier C of PPN cabinet 1 (seeFigure 4-32 through Figure 4-35):
   - Install a 9823-type lightwave transceiver on cable connector at slot 1C02.
   - Connect one end of the fiber-optic cable to the lightwave transceiver at slot 1C02.
   - Route the fiber-optic cable from the lightwave transceiver to the cabinet's cable tray and downward out of the cabinet through the cable manager to the PDS cross-connect facility.
   - At the PDS cross-connect facility, connect the fiber-optic cable to the lightwave-interface unit provided.
   - Delicately attach the fiber-optic cable (with cable ties) to the wall of the cable tray at the built-in cable-tie positions.
2. Behind control carrier A of EPN cabinet 2:
   - Install the same kind (either 9823-A or 9823-B) of lightwave transceiver on cable connector at slot 2A01.
   - Connect the fiber-optic cable to the lightwave transceiver slot 2A01.
   - Route the fiber-optic cable from the lightwave transceiver to the cabinet's cable tray and downward out of the cabinet through the cable manager to the PDS cross-connect facility.
   - At the PDS cross-connect facility, connect the fiber-optic cable to the lightwave-interface unit provided.
   - Delicately attach the fiber-optic cable (with cable ties) to the wall of the cable tray at the built-in cable-tie positions.
   - Coil up the surplus length of fiber-optic cable, and place the coil in the cable manager.

For Two Fiber-Remoted Expansion Port Networks

1. Behind port carrier D of PPN cabinet 1:
   - Install a 9823-type lightwave transceiver on cable connector at slot 1D02.
   - Connect one end of the fiber-optic cable to the lightwave transceiver at slot 1D02.
   - Route the fiber-optic cable from the lightwave transceiver to the cabinet's cable tray and downward out of the cabinet through the cable manager to the PDS cross-connect facility.
   - At the PDS cross-connect facility, connect the fiber-optic cable to the lightwave-interface unit provided.
   - Delicately attach the fiber-optic cable (with cable ties) to the wall of the cable tray at the built-in cable-tie positions.
2. Behind control carrier A of EPN cabinet 3:
   - Install the same kind (either 9823-A or 9823-B) of lightwave transceiver on cable connector at slot 3A01.
   - Connect the fiber-optic cable to the lightwave transceiver slot 3A01.
   - Route the fiber-optic cable from the lightwave transceiver to the cabinet's cable tray and downward out of the cabinet through the cable manager to the PDS cross-connect facility.
   - At the PDS cross-connect facility, connect the fiber-optic cable to the lightwave-interface unit provided.
   - Delicately attach the fiber-optic cable (with cable ties) to the wall of the cable tray at the built-in cable-tie positions.
   - Coil up the surplus length of fiber-optic cable, and place the coil in the cable manager.

3. Behind control carrier A of EPN cabinet 2:
   - Install a 9823-type lightwave transceiver on cable connector at slot 2A02.
   - Connect one end of the fiber-optic cable to the lightwave transceiver at slot 2A02.
   - Route the fiber-optic cable from the lightwave transceiver to the cabinet's cable tray and downward out of the cabinet through the cable manager to the PDS cross-connect facility.
   - At the PDS cross-connect facility, connect the fiber-optic cable to the lightwave-interface unit provided.
   - Delicately attach the fiber-optic cable (with cable ties) to the wall of the cable tray at the built-in cable-tie positions.
4. Behind control carrier A of EPN cabinet 3:
   - Install the same kind (either 9823-A or 9823-B) of lightwave transceiver on cable connector at slot 3A02.
   - Connect the fiber-optic cable to the lightwave transceiver slot 3A02.
   - Route the fiber-optic cable from the lightwave transceiver to the cabinet's cable tray and downward out of the cabinet through the cable manager to the PDS cross-connect facility.
   - At the PDS cross-connect facility, connect the fiber-optic cable to the lightwave-interface unit provided.
   - Delicately attach the fiber-optic cable (with cable ties) to the wall of the cable tray at the built-in cable-tie positions.
   - Coil up the surplus length of fiber-optic cable, and place the coil in the cable manager.

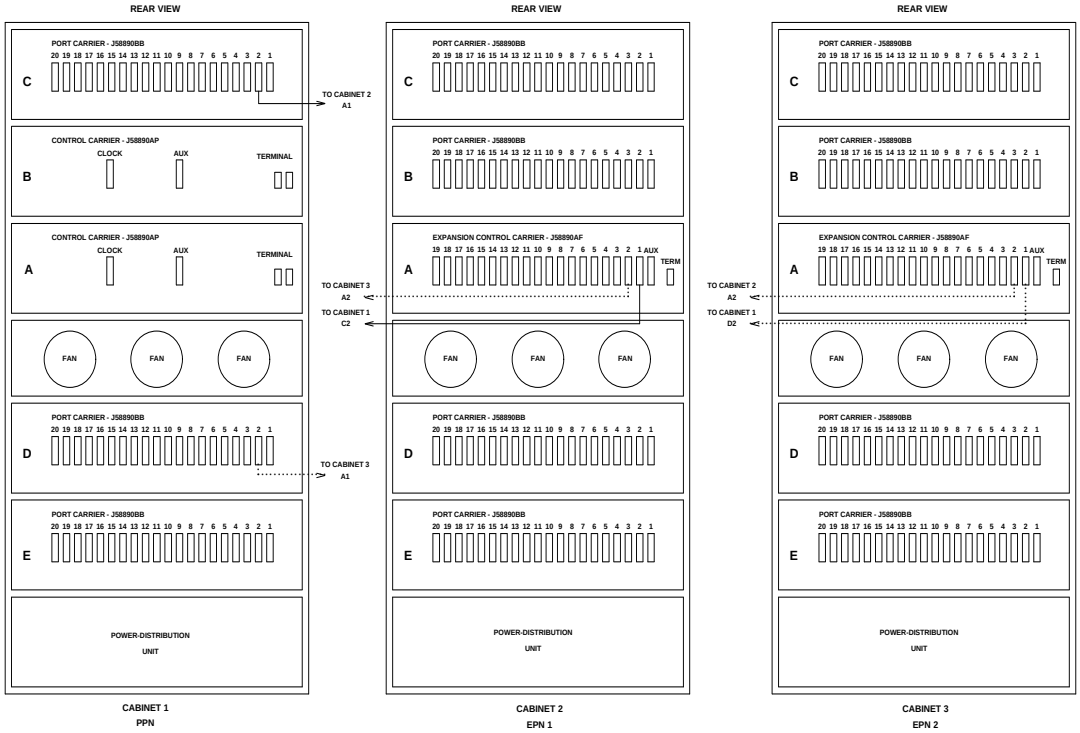

Figure 4-32. High-Reliability G3r V4 with Two or Three Port Networks

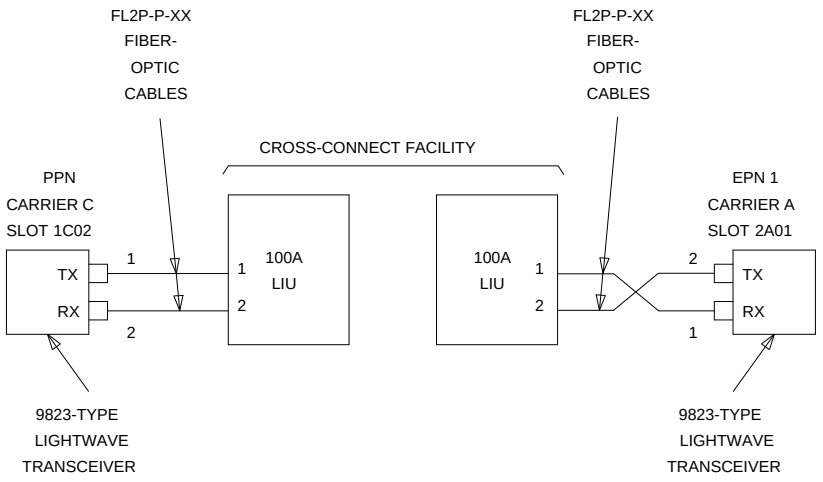

Figure 4-33. Fiber-Optic Connections PPN to EPN1

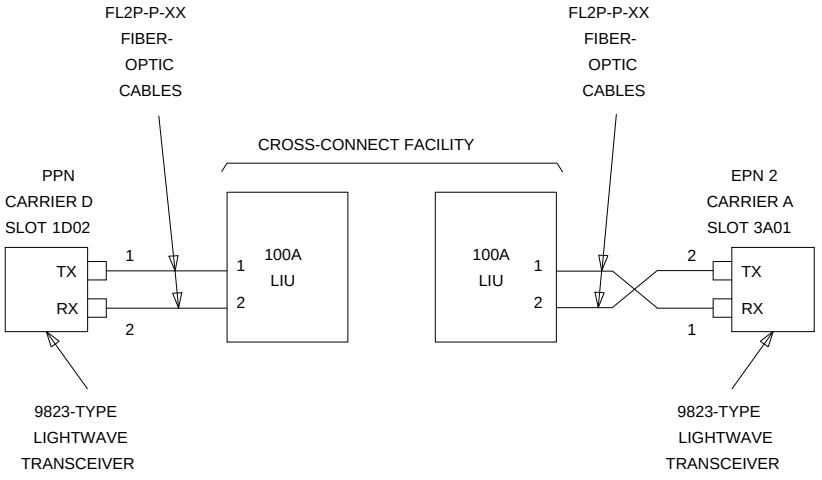

Figure 4-34. Fiber-Optic Connections PPN to EPN2

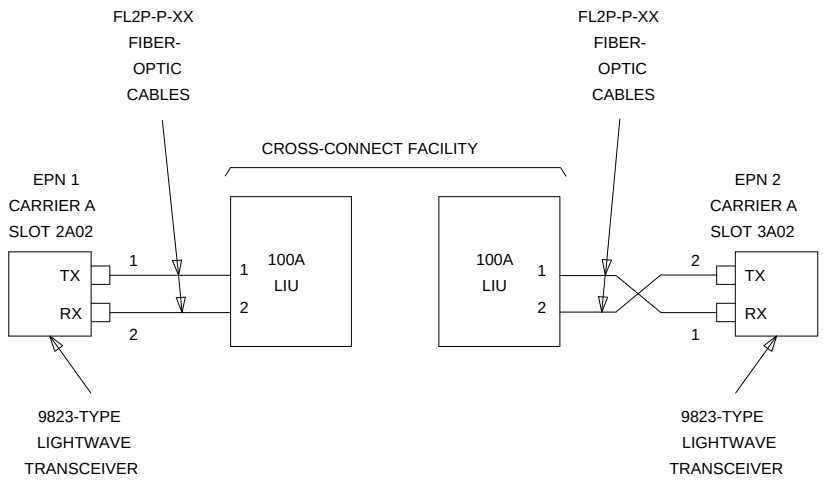

Figure 4-35. Fiber-Optic Connections EPN1 to EPN2

For One to Fifteen Switch-Connected Expansion Port Networks

1. Behind the PPN cabinet (see Figure 4-36):
   - Install a 9823-type lightwave transceiver on cable connector at slot 1E02.
   - Install a 9823-type lightwave transceiver on cable connector at slot 1C02.
   - Connect one end of the metallic intercarrier cable to the lightwave transceiver at slot 1E02.
   - Route the intercarrier cable from the lightwave transceiver to the cabinet's cable tray and upward to carrier ''C.''
   - Connect the other end of the intercarrier cable to the lightwave transceiver at slot 1C02.
   - Install a 9823-type lightwave transceiver on cable connector at slot 1E20.
   - Install a 9823-type lightwave transceiver on cable connector at slot 1D02.
   - Connect one end of the metallic intercarrier cable to the lightwave transceiver at slot 1E20.
   - Route the intercarrier cable from the lightwave transceiver to the cabinet's cable tray and upward to carrier ''D.''
   - Connect the other end of the intercarrier cable to the lightwave transceiver at slot 1D02.
   - Attach the intercarrier cables (with cable ties) to the wall of the cable tray at the built-in cable-tie positions.
2. Behind switch node carrier E of PPN cabinet 1 (see Figure 4-36):
   - For each EPN, install one 9823-type lightwave transceiver on a cable connector with the following order of slots: 1E03, 1E19, 1E04, 1E18, 1E05, 1E17, etc.
   - Connect one end of each fiber-optic cable to each lightwave transceiver, just installed.
   - Delicately attach the fiber-optic cables (with cable ties) to the wall of the cable tray at the built-in cable-tie positions.

3. Behind control carrier A of each EPN cabinet:
   - Install the same kind (either 9823-A or 9823-B) of lightwave transceiver on cable connector at slot A01.
   - Connect the other end of the fiber-optic cable to the lightwave transceiver, just installed, at slot A01.
   - Delicately attach the fiber-optic cable (with cable ties) to the wall of the cable tray at the built-in cable-tie positions.
   - At the top of the cabinet, coil up the surplus length of fiber-optic cable, and delicately attach the coil to the wall of the cable tray.

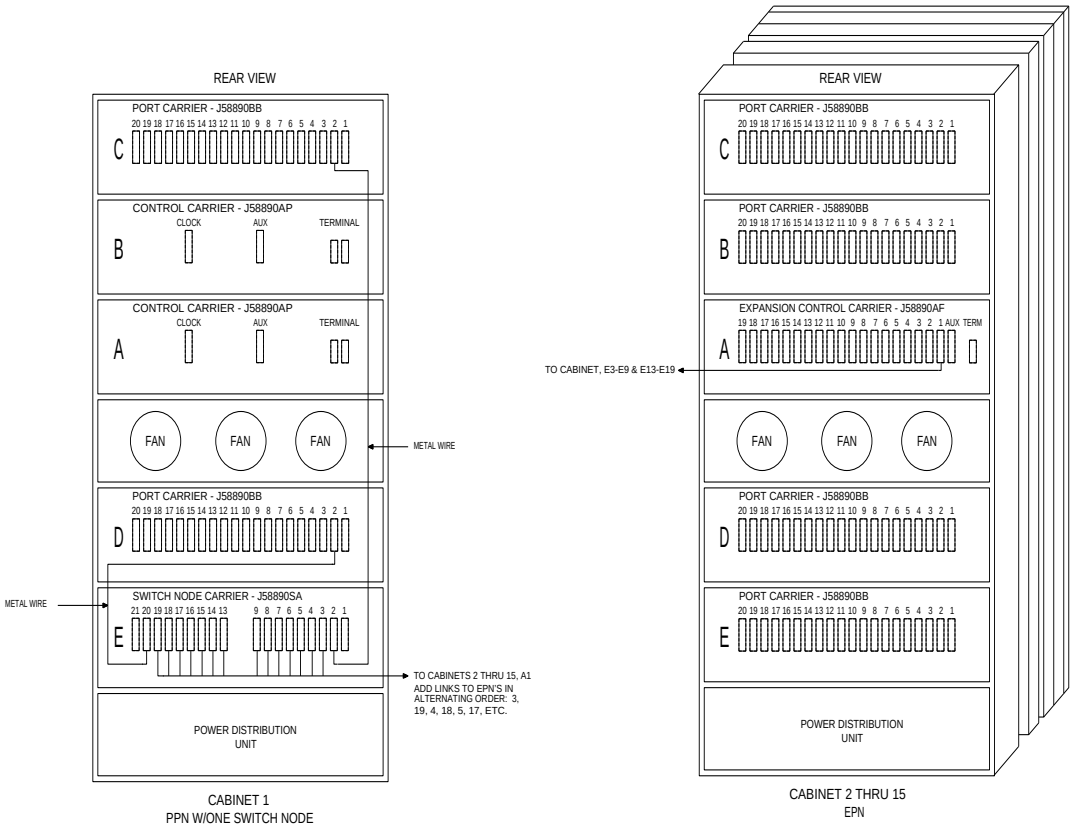

Figure 4-36. Fiber-Optic Connections through Center Stage Switch

DS1C-Remoted Cabinets

See NOTES. Digital Services 1 (DS1) facilities and associated equipment-room hardware and cabling can interconnect two port networks (PNs) located up to 100 miles apart. DS1 remoting is a

- Fiber-optic cabling is unavailable to the remote site
- When the desired distance between the port networks exceeds the practical fiber limit of 25,000 feet (about 4.7 miles)

NOTE:
As always, these distance limitations are approximate measurements of the *actual* fiber or copper right-of-way (not of the shortest linear distance) between the two endpoints.

NOTE:
The 100-mile limit for DS1 remoting is the maximum distance between *any* two port networks in a G3r V4 system with either direct or switched port-network connections.

For example, in a *directly connected* system, a single EPN can be remoted up to 100 miles. This is because the length of the *direct* fiber connection from any port network in the local equipment room to the remote EPN is 100 miles.

However, if more than one EPN is remoted in a directly connected system, the 100-mile limit applies to any two port networks. Assuming straight cable runs, suppose that a customer wants to remote one EPN 80 miles due east and another EPN due north of the local PPN. This arrangement can only be accommodated if the second EPN resides no more than 60 miles north of the PPN. This is because the direct fiber distance between the two EPNs is also limited to 100 miles.

As another example, in *switch-connected* system with numerous port networks, one EPN might be remoted 75 miles from the switch node. If this were the case, then the maximum distance that any other EPN could be remoted would be 25 miles.

Digital public-network tie-trunk facilities provide the end-to end connectivity between the port networks. For either type of port network (PPN or EPN), a TN574 DS1 Converter (DS1C) circuit pack serves as the port-network interface to the DS1 facilities. As a PPN interface, a TN574 DS1C can reside in either:

- A port carrier (in any port slot)
- A switch-node carrier (in port slot ‘‘1’’ or ‘‘21’’)

As an EPN interface, a TN574 DS1C can reside in an expansion control carrier (in any port slot).

DS1 Cabling within the Local Port Networks. See NOTE. Use the running list that accompanies the upgrade equipment to determine which cable should be connected where. The following paragraphs only provide conceptual information about wiring a DS1C interface either to an expansion interface or to a switch-node interface, not step-by-step procedures for wiring a specific G3r V4 system.

NOTE:
It is important to label every cable that you install. For details, refer to the section, *Labels for Fiber-Optic Cables*, in Appendix E of the installation manual.

See NOTE. As shown in Figure 4-37, a cable connects each DS1C either to the appropriate TN570 expansion interface (for a direct connection to another port network) or to the appropriate TN573 SN Interface (for a switched connection to another port network).

NOTE:
For the purposes of a G1 or G3i to G3r V4 upgrade, these cables will usually connect to TN570 expansion interfaces (already installed) for direct connections between the new PPN and either one or two EPNs.

On the DS1C side, a 4C retainer binds this shielded cable to the DS1C port connector. On the EI/SNI side, a 4B retainer binds the cable to the EI/SNI port connector. The DS1C-to-EI/SNI cable also provides a piggy-back connector enabling subsequent access to the public network. Table 4-8 lists the cable numbers and lengths for the possible connections.

Table 4-8. Numbers and Lengths of DS1C-to-EI/SNI Cables

Connection Type	Comcode Number	Length
Within same carrier	846448637	1 foot
Between two carriers in same port network	846448645	5.5 feet
Between two carriers in adjacent networks	846448652, and one 846885259 bracket	1 foot (used with two 9823As, & one 20-foot fiber-optic cable)

DS1 Cabling to the Public Network. See NOTE. Use the running list that accompanies the upgrade equipment to determine which cable should be connected where. The following paragraphs only provide conceptual information about wiring a DS1C interface to a wall-field block, not step-by-step procedures for wiring a specific G3r V4 system.

NOTE:
It is important to label every cable that you install. For details, refer to the section, *Labels for Fiber-Optic Cables*, in Appendix E of the installation manual.

Figure 4-37 also shows the cabling between various port networks and the cross-connect field where the public network is accessed. If already connected to either an expansion or switch-node interface, a DS1C circuit pack already resides either in an EPN expansion control carrier or in a PPN port carrier or switch-node carrier.

Depending on the traffic requirements between the two port networks, a 25-foot H600-348 cable extends from the piggy-back connector (on each DS1C-to-EI/SNI cable) to from one to four channel service units (CSUs). [This cable branches to four 15-pin subminiature D-type connectors (labeled ‘‘01’’ to ‘‘04’’) to make the CSU connections.] Then, in turn, the CSU(s) are connected to the wall-field block (corresponding to the equipment location of the DS1C) at port connections ‘‘8,’’ ‘‘7,’’ ‘‘6,’’ and ‘‘5’’ (in descending order).

Neglecting overhead, this wiring arrangement can provide PN-to-PN communication at the bandwidth of up to four DS1 spans (1.544 Mbps each). Between each port network’s wall field, the port networks communicate across leased lines in the public network.

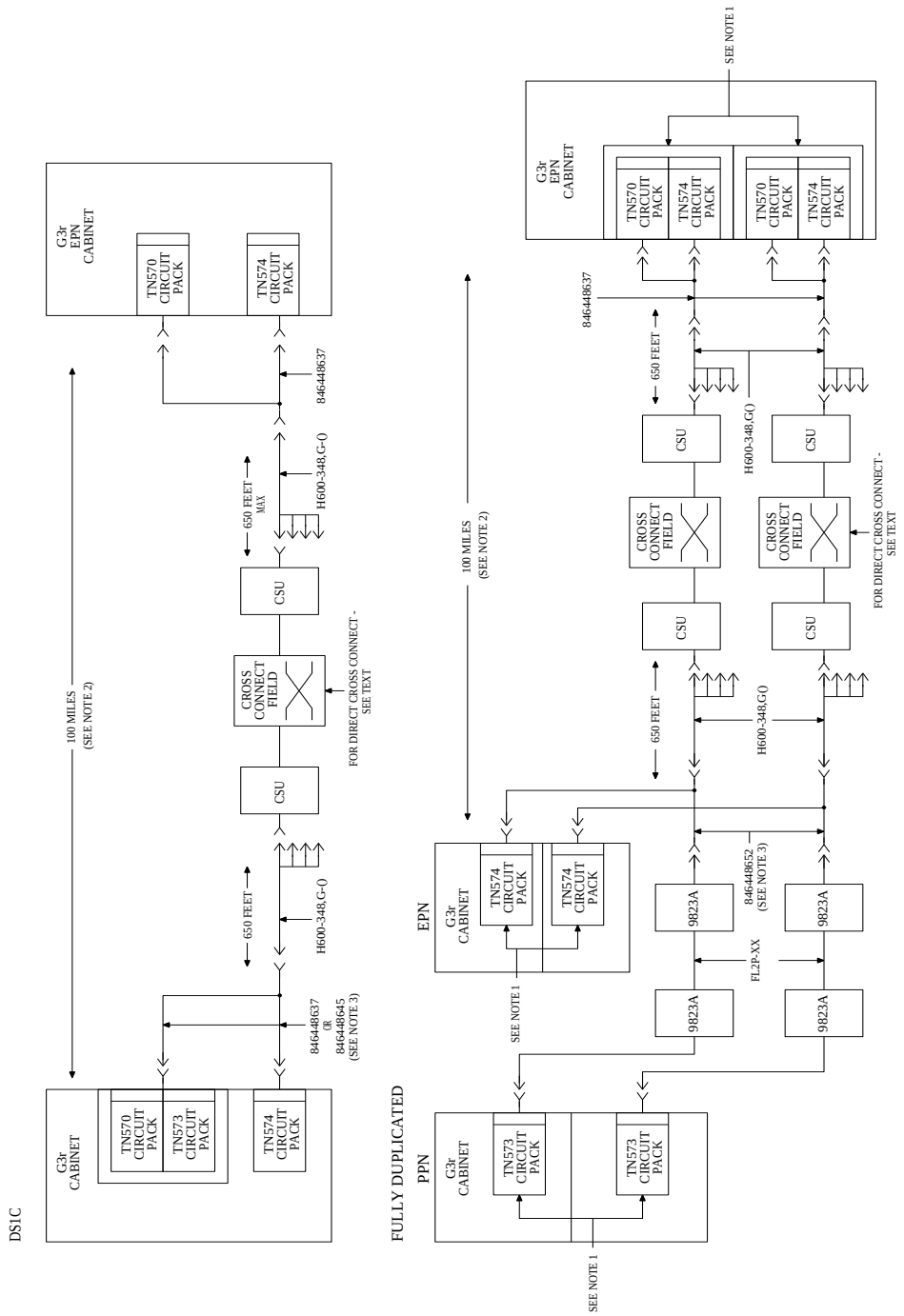

Figure 4-37. DS1 Connectivity betweem Remote PNs

Verify Usable Circuit-Pack Vintages

Verify that every G1 or G3i circuit pack reused in the upgrade conforms to the usable vintage requirements for a G3r V4 system (see Reference Guide for Circuit-Pack Vintages and Change Notices).

Install System Access Ports

As a prerequisite for connecting various endpoints that use EIA interfaces to the G3r V4 system, install the up to eight loop-around connections for Mode 2-to-Mode 3 (and vice versa) data conversion.

From the *outgoing* perspective of the system communicating with an EIA endpoint, these loop-around connections convert Mode 3 data (circuit-switched packet data, with undefined bit rates and packet specifications) to Mode 2 data (low-speed, usually asynchronous, data at rates of 300 to 19,200 bps) by:

- Accepting Mode 3 data off the LAN bus (from the SPE) at a TN553 Packet Data Line circuit pack, where Mode 3-to-Mode 2 conversion is done
- Routing the converted data through the cross-connect field and back to a TN726B Data Line where the equivalent Mode 2 data can access the TDM bus, for subsequent routing to an EIA endpoint

The endpoints that use these EIA interfaces and, therefore, require the Mode 2-to-Mode 3 conversion include:

- DEFINITY Communications System Generic 3 Management Applications (G3-MA)
- Remote DEFINITY Communications System Generic 3 Management Terminal (G3-MT)
- Basic Call Management System (BCMS) terminal
- Call Detail Recording Unit (CDRU)/Centralized Attendant Service Plus (CAS+)
- Property Management System (PMS)
- Printers

The following figures show this loop-around configuration and how the B25A cables are cross-connected.

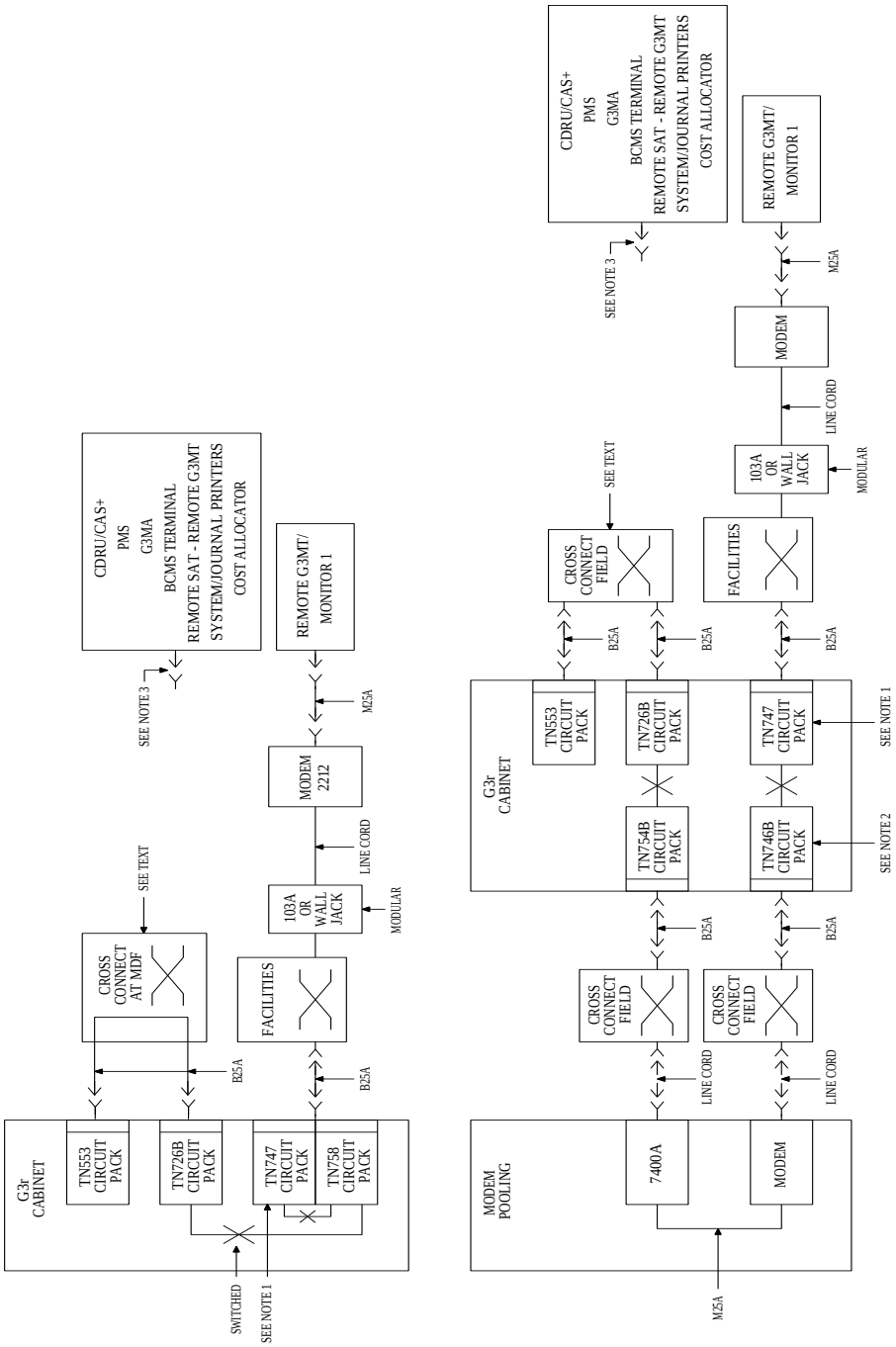

Figure 4-38. Connections: CDRU/CAS+, PMS, BCMS, Printers, G3-MA/MT

Pinouts for the TN553 and TN726B circuit packs shown cross-connected in the preceding figure are given in the table below.

Pinouts

TN553 (12 Ports)

1	26	
2	27	1
3	28	
4	29	2
5	30	
6	31	3
7	32	
8	33	4
9	34	
10	35	5
11	36	
12	37	6
13	38	
14	39	7
15	40	
16	41	8
17	42	
18	43	9
19	44	
20	45	10
21	46	
22	47	11
23	48	
24	49	12
25	50	G

TN726B (8 Ports)

1	26	Blank
2	27	
3	28	1
4	29	Blank
5	30	
6	31	2
7	32	Blank
8	33	
9	34	3
10	35	Blank
11	36	
12	37	4
13	38	Blank
14	39	
15	40	5
16	41	Blank
17	42	
18	43	6
19	44	Blank
20	45	
21	46	7
22	47	Blank
23	48	
24	49	8
25	50	Blank

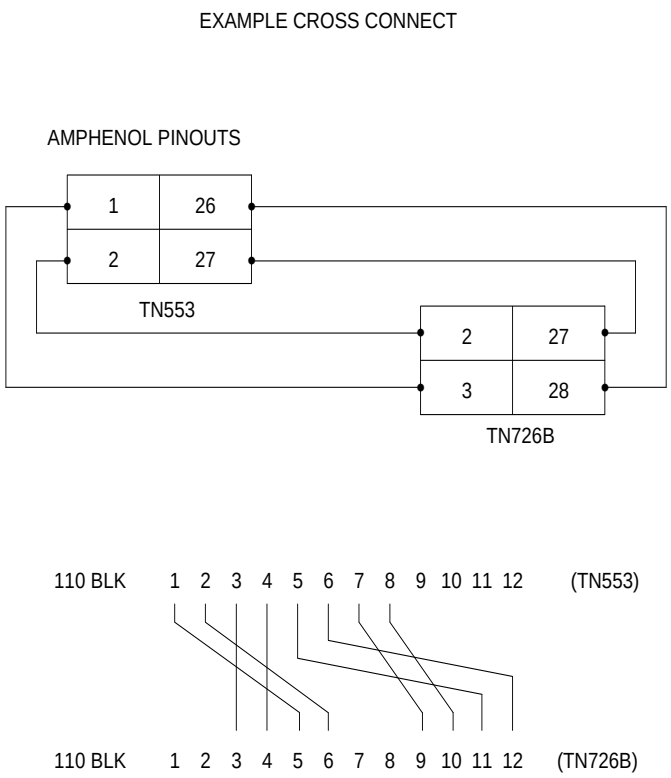

Figure 4-39. Example of Cross Connect betweem TN553 and TN726B

Reseat DEFINITY AUDIX System

See WARNING. If a DEFINITY AUDIX System resides in the system, reseat the AUDIX assembly to its backplane connectors.

WARNING:
Before inserting or removing a circuit pack from a cabinet, put on a wrist strap and attach its plug or clip to the cabinet's frame.

Remove Power-Failure Ground Strap

Remove the ground strap from the power-failure transfer unit.

Reboot the System

1. Connect the G3-MT to the connector labeled ''TERMINAL'' behind PPN control carrier ''A,'' or install the G3-MA according to the ''Set Up G3-MA'' chapter of *DEFINITY Communications System Generic 3 Management Applications — Operations*, 585-229-202.
2. Verify that the new G3r V4 system tape is inserted in the PPN cabinet.
3. At each EPN power-distribution unit, set the main circuit breaker to ON.
4. At the PPN power-distribution unit, set the main circuit breaker to ON.
5. The system now goes through the reset level 4 rebooting process, loading blank translations from the *disk* (not the new tape). Rebooting requires 5 to 11 minutes.
6. Enter **`reset system 4 tape`**. Press (RETURN). This command instructs the system to go through the reset level 4 rebooting process, loading the upgraded STS translations from the new *tape*. Rebooting requires 5 to 11 minutes.

   Refer to ''Initialization and Recovery'' and ''LED Interpretation'' chapters in *DEFINITY Communications System Generic 3r V4 Maintenance*, 555-230-105, Issue 3, for circuit-pack LED indications and screen displays that occur during system reboot.
7. Log in at the `login:` prompt on the G3-MT or G3-MA, and set the time to ensure that the system is booted properly.
8. Enter **`status spe`**, and press (RETURN) to verify that the standby SPE is refreshed and that the standby disk is in service.
9. Enter **`restore disk both full`**. Press (RETURN). This command instructs the system to write the upgraded STS translation information from memory to the disks.
10. Enter **`reset system 4`**. Press (RETURN). This command instructs the system to go through the reset level 4 rebooting process, loading the upgraded STS translations from the *disk*. Rebooting requires 5 to 11 minutes.

NOTE:
Certain forms have changed for G3r V4. Upgraded G1 or G3i translations may appear on a different form, fields may have shifted within a form, and/or the names assigned to particular fields may have changed. Refer to Table 4-1 and Table 4-2, *DEFINITY Communications System Generic 3r Transition Reference*, 555-230-636, and *DEFINITY Communications System Generic 3 V4 Implementation*, 555-230-655, and make the necessary changes.

Relabel Wall Field

If not done during the installation of new PPN, relabel the wall field with the new port-network number of the upgraded G3r V4 EPN. (The STS software upgrade assigned the next port-network number, after the highest-numbered port network in the G1 or G3i system, to the upgraded EPN.)

Close Upgraded EPN Cabinet and Reconnect Cables

1. At the power-distribution unit of the upgraded EPN, set the main circuit breaker to OFF.

   NOTE:
   Powering down an EPN without powering down the PPN will set off alarms. However, these alarms should clear after power is restored to each EPN.

2. Temporarily disconnect the lightwave transceivers and fiber-optic cables, already labeled, from the appropriate carriers.
3. Replace the back doors or back panels previously removed.
4. At the EPN cabinet, reconnect the lightwave transceivers, fiber-optic cables, and the connector cables associated with the carrier being replaced.
5. Install the front door on the EPN cabinet if previously removed.

Power Up the EPN Cabinets

1. At each EPN power-distribution unit, set the main circuit breaker to ON.

   After about 40 seconds, EPN power and PPN/EPN communications return.

2. After power returns to each EPN and all trouble is cleared, verify that the EMERGENCY TRANSFER CONTROL switch is set to AUTO. This restores the system to the normal mode.

Retranslate Port Circuits

If port circuit packs in the G1 control carrier were relocated in order to put:

- A critical port circuit pack, requiring longer nominal battery holdover (e.g., a DS1 or an Announcement circuit pack), in a port slot
- A TN736, TN752, or TN755 power supply in port slots ‘‘18’’ and ‘‘19’’

- A TN570 Expansion Interface in port slot ‘‘1’’
- A TN570 Expansion Interface in port slot ‘‘2’’ (for a second EPN)

of the new expansion control carrier, verify that they were retranslated during the off-site software upgrade. If not, they must be retranslated now. Refer to *DEFINITY Communications System Generic 3 V4 Implementation*, 555-230-655, for instructions on performing the retranslations.

Rerecord Announcements

The off-site STS translation upgrade did not preserve the contents of recorded announcements. Therefore, if a TN750 Annoucement circuit pack resides in the system, any announcements that were stored on the circuit pack must be rerecorded.

Run Acceptance Tests

Refer to Chapter 11 of *DEFINITY Communications System Generic 1 and Generic 3 Installation and Test*, 555-230-104, Issue 5, and perform the appropriate tests.

Register System as G3r V4

Get the serial number of the new G3r V4 PPN, and call the INADS Database Administrator at the Technical Service Center (1-800-248-1111) to register the upgraded system as a G3r V4.

Return Replaced G1 or G3i Equipment

The G1 or G3i equipment replaced, during the upgrade to G3r V4, should be returned to AT&T according to the requirements outlined in:

BCS/Material Logistics, MSL/Attended Stocking Locations

Methods and Procedures for Basic Material Returns

The replaced G1 or G3i equipment includes:

- G1 or G3i control carrier (J58890AH), control circuit packs, and 982LS CURL
- G1 or G3i duplicated control carrier (J58890AJ) and control circuit packs
- G1 or G3i ICC cables (H600-182 G1)
- G1 or G3i tape cartridges
- If G1 or G3i contained an EPN, TN776 expansion interfaces
- 4-series lightwave transceivers

Duplicated G1 or G3i to Critical-Reliability G3r V4

See NOTE. Refer to *DEFINITY Communications System Generic 1 and Generic 3 Installation and Test*, 555-230-104, Issue 5, to install the new PPN cabinet.

NOTE:
During the wall-field wiring of the PPN installation, the wall field can also be relabeled with the new port-network number of the G1 or G3i PPN to be upgraded. (The STS software upgrade assigned the next port-network number, after the highest-numbered port network in the G1 or G3i system, to the upgraded G3r V4 EPN.)

If a second or third EPN is being added, refer to *DEFINITY Communications System Generic 1 and Generic 3 Installation and Test*, 555-230-104, Issue 5, to install the new EPN.

Upgrade Cabinets

The existing PPN cabinet is always upgraded to an EPN. An existing EPN cabinet is also always upgraded to an EPN. Upgrade the cabinets using the following procedures.

A G1 or G3i PPN is upgraded to a critical-reliability G3r V4 EPN by:

- Removing the control carrier in position ‘‘A’’
- Installing the J58890AF expansion control carrier in position ‘‘A’’
- Removing the control carrier in position ‘‘B’’
- Installing the J58890BB-3 port carrier in position ‘‘B’’
- Adding the G3r V4 circuit packs
- Restructuring the port circuits as required

A duplicated G1 or G3i EPN (either multicarrier or single-carrier) is upgraded to a critical-reliability G3r V4 EPN by:

- Removing the TN776 expansion interface circuit packs (from slots 2A01 and 2B01).
- Installing the G3r V4 TN570 expansion interface circuit packs (in slots 2A01, 2A02, 2B01, and 2B02).
- Restructuring the port circuits as required

Prerequisite Hardware

The equipment in Table 4-9 *must* be on-site before the upgrade begins. Ensure that the tapes are G3r V4 tapes.

To place a claim for missing equipment, as part of the Streamlined Implementation process, call "1-800-772-5409," and respond to the call prompter.

Table 4-9. Required Hardware

Equipment	Description	Quantity
PEC 6300-07X	Processor Port Network	1
J58890AF	Expansion Control Carrier	1
J58890BB-3	Port Carrier	1
106647985	TN775B Maintenance	1
103281788	TN570 Expansion Interface	w/o CSS: 4 or 12 (Note 1) w/CSS: 2 per port network
103281812	TN573 Switched Node Interface	w/CSS: 2 per port network
J58890TF	Tape Cartridge	4
105691158	CFY1 Current Limiter	1
H-600-204 G1		2 (Note 2)
63300A	FL2P-P-XX Fiber Cable	2 or 6 (Note 3)
106455348 or 106455363	9823-A Lightwave Transceiver 9823-B Lightwave Transceiver	w/o CSS: 4 or 12 (Note 3) w/CSS: 4 per EPN w/o CSS: 4 or 12 (Note 3) w/CSS: 4 per EPN
106689516	TN771D Maintenance Test	1 or 2 (Note 5)

Notes:

1. Depending on the number of G3r V4 EPNs. Four are required for a critical-reliability switch with two port networks; twelve with three port networks. Either two or eight TN570s are shipped loose with the EPN equipment. The factory has installed the other two or four TN570s in the new PPN.
2. Required for an EPN in a critical-reliability system.
3. Depending on the number of G3r V4 EPNs. Four or twelve are required if the EPNs and the PPN are remotely located.

4. One pair for each fiber connection. For each connection, one 9823-type lightwave transceiver is installed in an EPN, and a like transceiver in the PPN. 4E transceivers cannot be reused from the upgraded G1 or G3i system. Additional 9823-type transceivers, ordered separately, are also shipped loose with the EPN equipment.
5. Depending on the number of G3r V4 EPNs.

Required Tools

The following tools and items may be required during the upgrade:

- High-intensity flashlight or AC drop light
- 3/8-inch flat-blade screwdriver with a 10-inch shank (minimum)
- 5/16-inch and 1/4-inch sockets with a ratchet and 10-inch extension
- Power screwdriver (optional)
- Long-nose pliers to disconnect grounding straps and straighten backplane pins
- Static-proof or original circuit-pack packaging for transporting circuit packs
- Labels for identifying the port circuit packs and cables attached to the rear of cabinets
- Receptacle for holding approximately 100 self-tapping screws
- 12 spare #12 and #10 self-tapping screws
- 4 spare carrier grounding straps
- Authorized wrist grounding strap
- Repair kit for backplane pins (KS-22876 L2 or equivalent)
- One copy of each of the following manuals:
  - *DEFINITY Communications System Generic 3r V4 Maintenance*, 555-230-105, Issue 4
  - *DEFINITY Communications System Generic 3 V4 Implementation*, 555-230-655

Preventive Maintenance

During the G3r V4 upgrade, follow routine preventive maintenance procedures on the system to be upgraded. For information about the procedures and necessary equipment, refer to the “Preventive Maintenance’’ section in *DEFINITY Communications System Generic 3r V4 Maintenance*, 555-230-105, Issue 4.

Verify System Status

Before proceeding, the system should be examined for alarms, and every problem should be corrected. The system must be alarm-free.

Label Cables

To make reconnecting the cables simpler and more reliable, label both ends of the connector cables associated with the carrier to be removed (if not already labeled).

Shut Down DEFINITY AUDIX System

1. See WARNING. If a DEFINITY AUDIX System resides in the system to be upgraded, shut down the AUDIX assembly and allow the disk to completely spin down.

   WARNING:
   Neglecting to shut down an AUDIX assembly before powering down the system cabinet where it resides can damage the AUDIX disk.

2. See WARNING. To avoid an unexpected AUDIX reboot after an unplanned switch reboot, unseat the AUDIX assembly from its backplane connectors.

   WARNING:
   Before inserting or removing a circuit pack from a cabinet, put on a wrist strap and attach its plug or clip to the cabinet's frame.

Power Down G1 or G3i System

1. See CAUTION. At the PPN power-distribution unit, set the main circuit breaker to OFF.

   CAUTION:
   Powering down the control cabinet will cause important system data, such as BCMS data, records of queued ACD calls, Automatic Wakeup requests, and Do Not Disturb requests to be lost. Refer to DEFINITY Communications System Generic 1, Generic 3i, Generic 3i-Global, and Generic 3i V4 Maintenance, 555-204-105, Issue 7, for information about preparing the system for a power down. BCMS data cannot be stored to or retreived from tape.

2. At the EPN power-distribution unit, set the main circuit breaker to OFF.

Install Power-Failure Transfer Ground Strap

CAUTION:
To avoid contaminating single-point ground, do not connect the ground strap while the system is powered up.

1. Connect a strap's lead either to pin 49 of the connecting block or to pin 49 of the CAP (cable access panel) associated with the power-failure transfer panel.
2. Route the other lead to an approved ground source.
3. Connect the lead to the approved ground source.

Remove Doors and Panels and Disconnect Cables

1. Remove the front door from the cabinet (if desired).
2. With the cable retainer in front of you and the part number visible (4B or 4C), locate the slot that is almost vertical. (This slot is adjacent to the part number.) Insert a flat-blade screwdriver with a wide blade (1/4-inch recommended) into the slot, and twist the screwdriver. The retainer will snap open easily so that the cable can be removed.
3. Disconnect previously labeled cables associated with the carrier to be removed.
4. Behind a ''DEFINITY style'' cabinet, remove the back doors from the cabinet.
5. Behind a previously upgraded cabinet, remove all of the back panels. (Two different types of screws hold the back panels to the cabinet. The #10 screws can be removed with a screwdriver or a 1/4-inch socket. The #12 screws can be removed with a screwdriver or a 5/16-inch socket.)

Remove Circuit Packs from Carriers A and B

1. To ensure that circuit packs and power units in the ''A'' and ''B'' carriers are properly replaced, label each component with its slot number.
2. Disconnect the power cords from the power units in the ''A'' and ''B'' carriers.
3. See WARNING. Remove all circuit packs and power units from carrier ''A.'' Store the circuit packs in the static-proof packaging.
4. See WARNING. Remove all circuit packs from carrier ''B.'' Store the circuit packs in the static-proof packaging.

WARNING:
Before inserting or removing a circuit pack from a cabinet, put on a wrist strap and attach its plug or clip to the cabinet's frame.

5. Remove the circuit-pack blanks from slots that do not contain circuit packs.
6. Remove the front trim plate from the ‘‘B’’ carrier by pulling straight off. Then remove the front trim plate from the ‘‘A’’ carrier.

Remove Control Carriers A and B

1. See the following CAUTION and NOTE. Remove the TDM/LAN cable from between the ‘‘A’’ and ‘‘B’’ carriers (seeFigure 4-40). This cable will be reused.
2. See CAUTION and NOTE. Disconnect one end of the TDM/LAN cable (between the ‘‘A’’ and ‘‘D’’ carriers) from the ‘‘A’’ carrier. Leave the other end connected to the ‘‘D’’ carrier, and move the cable into a position so that it will not interfere with removing the ‘‘A’’ carrier.
3. See CAUTION and NOTE. Disconnect one end of the TDM/LAN cable (between the ‘‘B’’ and ‘‘C’’ carriers) from the ‘‘B’’ carrier. Leave the other end connected to the ‘‘C’’ carrier, and move the cable into a position so that it will not interfere with removing the ‘‘B’’ carrier.

CAUTION:
When removing the TDM/LAN cables from a previously upgraded carrier, be careful that none of the short pieces of shrink tubing come off the four corner pins of the pin-field block. Otherwise, when the new equipment is connected, -48 volts could short to ground.

NOTE:
Note the position of the TDM/LAN cable before disconnecting.

4. Remove the eight ground straps from between the ‘‘A’’ and ‘‘B’’ carriers (see Figure 4-41). Retain these straps since they will reconnected to the new ‘‘A’’ and‘‘B’’ carriers.
5. Disconnect one end of the eight ground straps (between the ‘‘A’’ and ‘‘D’’ carriers) from the ‘‘A’’ carrier. These straps will be reconnected to the new ‘‘A’’ carrier.
6. Disconnect one end of the eight ground straps (between the ‘‘B’’ and ‘‘C’’ carriers) from the ‘‘B’’ carrier. These straps will be reconnected to the new ‘‘B’’ carrier.
7. Disconnect the ‘‘P1’’ (small 9-pin) connector and the ‘‘P2’’ (large 37-pin) connector from the ‘‘A’’ carrier (see Figure 4-42). Move the cables into a position where they will not interfere with removing the carrier.
8. Slide the latch up, and disconnect the ‘‘P1’’ (small 9-pin) connector from the ‘‘B’’ carrier (see Figure 4-422). Move the cable into a position where it will not interfere with removing the carrier.

9. Disconnect and remove the ICC cables (see Figure 4-40). They will not be reused.
10. Remove the fan trim plate by pulling straight off.
11. Clean or replace the air filter (403326820) if necessary.
12. In front of carrier, remove the four screws (top two first) holding the ‘‘B’’ carrier to the cabinet frame. Use a long-handle screwdriver or 5/16-inch socket with a 10-inch extension.
13. Behind the carrier in a ‘‘DEFINITY style’’ cabinet, remove the two screws holding the ‘‘B’’ carrier’s rear connector panel to the cabinet frame.
14. See CAUTION. Slide the carrier forward 1 to 2 inches; then, from the back, be sure that no cables or wiring harnesses are caught on the cabinet/carrier framework.

    CAUTION:
    Cables and wiring harnesses can be damaged if they catch on the framework and if too much pressure is applied in removing the carrier.

15. Remove the carrier by sliding it out the front of the cabinet.
16. Repeat Steps 12 through 15 for the ‘‘A’’ carrier.

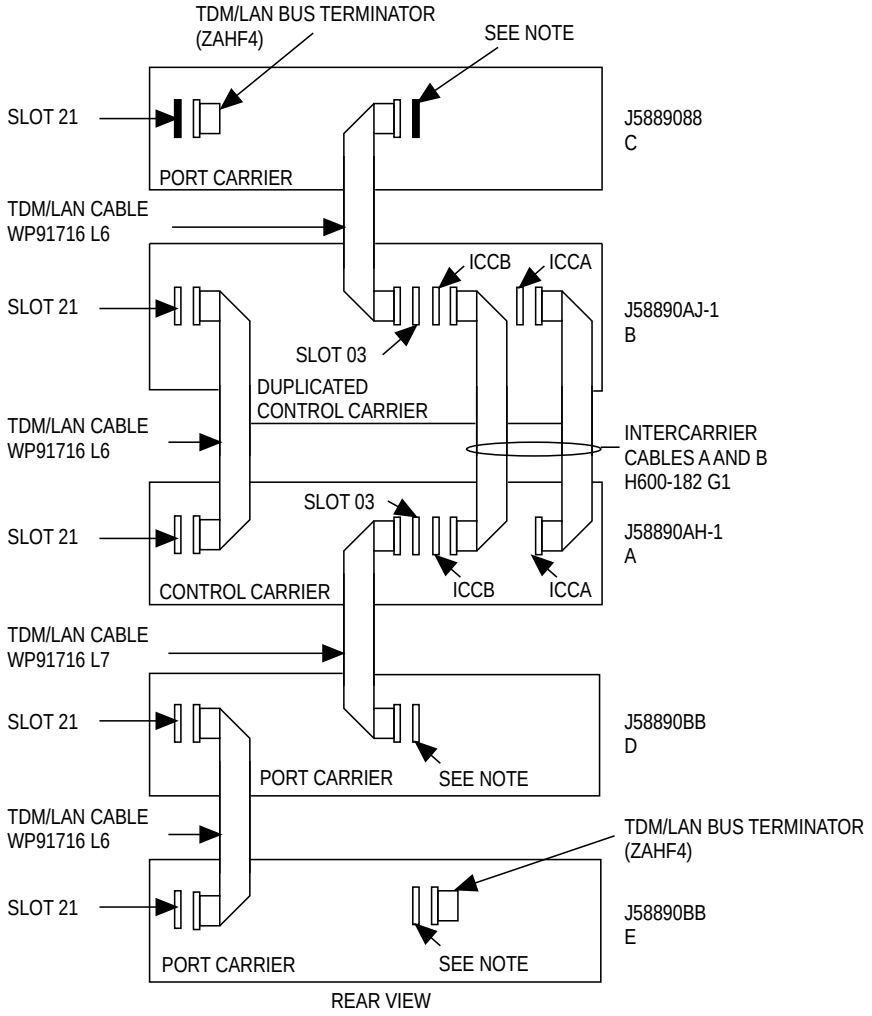

NOTE:

ON PORT CARRIER J58890BB-1, CONNECT THE TDM CABLE OR TDM TERMINATOR TO SLOT 02. ON PORT CARRIERS J58890BB-2 AND J58890BB-3, CONNECT THE TDM CABLES OR TDM TERMINATOR TO SLOT 01. IF THE PORT CARRIER HAS J58890BB-1 AND J58890BB-2 STENCILLED ON IT, TREAT IT AS A J58890BB-1.

Figure 4-40. TDM/LAN Connections for Duplicated G1 or G3i PPN

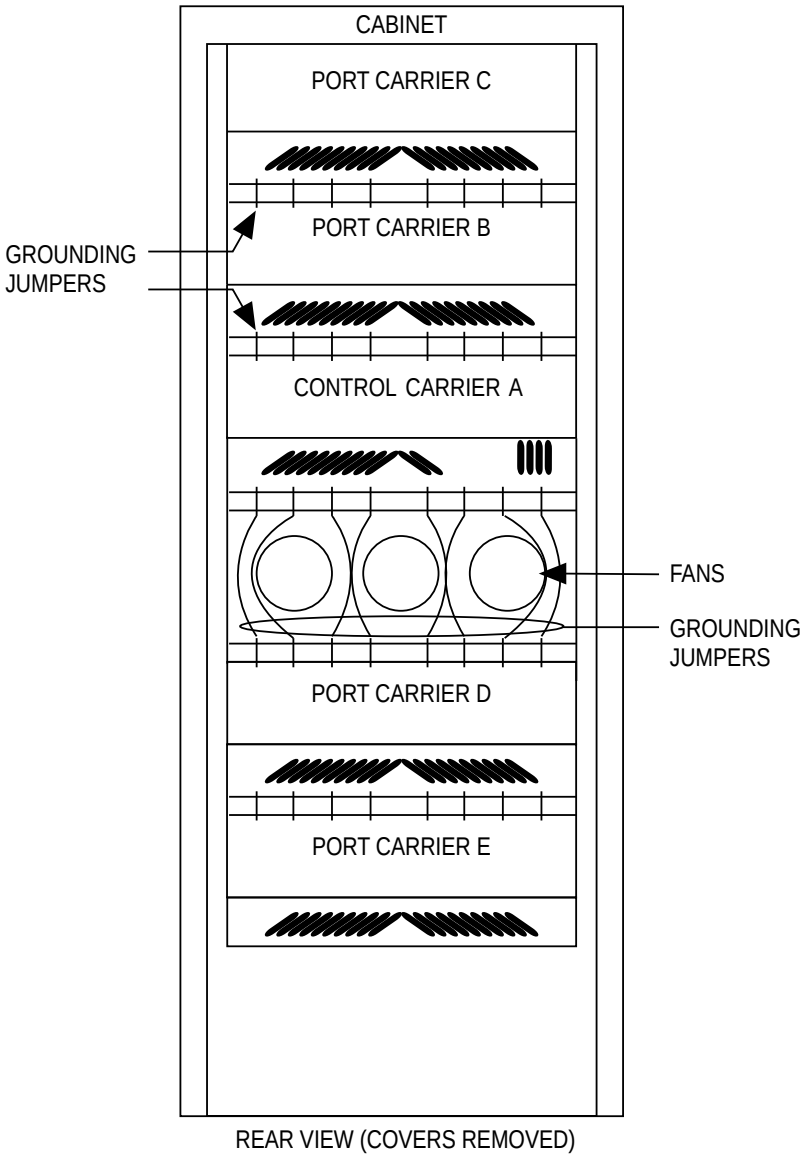

Figure 4-41. Locations of Grounding Jumpers

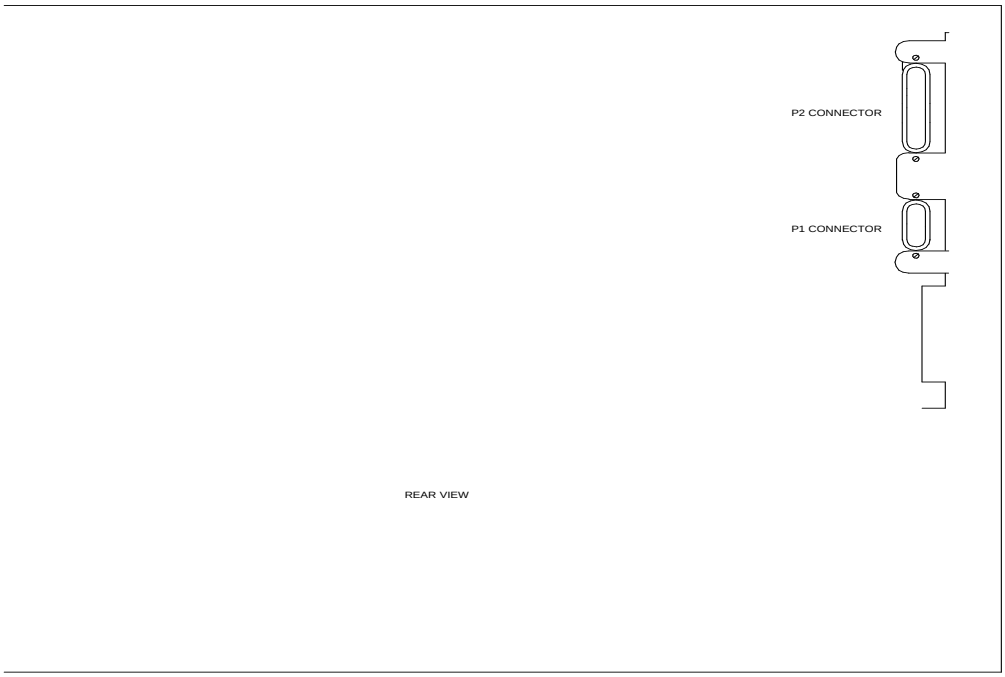

Figure 4-42. Location of P1 and P2 Connectors

Prepare the New A and B Position Carriers

1. Visually inspect the new carriers for any damage. Verify that the backplane pins are not bent.
2. Place the expansion control carrier on the floor so that the rear of the carrier faces up.
3. Install the CFY1 current limiter (CURL) on the ‘‘A’’ carrier to the pin-field block marked ‘‘CURL.’’ The CURL is inserted with the components on the left side as viewed from the rear.
4. At the rear connector panel, determine which connectors will have a cable attached, and install a 4B cable retainer on each of these connectors.

Install the New A and B Position Carriers

1. Install the J58890AF expansion control carrier in position ‘‘A’’ by lining up the plastic alignment tips on the top rear of the carrier with the screw holes in the cabinet. These alignment tips will support the carrier while the screws are being replaced. Ensure that the power cords are properly placed in the slots at the sides of the carrier.
2. See CAUTION. Fasten the carrier into position with four self-tapping screws saved from the removal of the old carrier.

   CAUTION:
   Carefully realign the threads on the self-tapping screws by turning them clockwise a turn or two before tightening them to avoid stripping the threads out of the framework.

3. Behind the carrier in a ‘‘DEFINITY style’’ cabinet, replace the two screws saved from the removal of the old carrier.
4. Install the J58890BB-3 port carrier in position ‘‘B’’ by lining up the plastic alignment tips on the top rear of the carrier with the screw holes in the cabinet. These alignment tips will support the carrier while the screws are being replaced. Ensure that the power cords are properly placed in the slots at the sides of the carrier.
5. See CAUTION. Fasten the carrier into position with four self-tapping screws saved from the removal of the old carrier.
6. Connect the ‘‘P2’’ and “P1’’ (large and small) connectors to the ‘‘A’’ carrier. If necessary, to get enough slack in the cables, cut the tie wrap holding the intercabinet cables from the upright in the area of the carrier being installed. Snap the connector lock into place to ensure the connection is properly made (see Figure 4-42).

7. Connect the ‘‘P1’’ (small) connector to the ‘‘B’’ carrier. To get enough slack in the cables, cut the tie wrap holding the intercabinet cables from the upright in the area of the carrier being installed. Snap the connector lock into place to ensure the connection is properly made (see Figure 4-42).
8. Connect the eight ground straps from the ‘‘D’’ carrier to the new ‘‘A’’ carrier (see Figure 4-41). These straps were left connected to the ‘‘D’’ carrier.
9. Connect the eight ground straps from the ‘‘C’’ carrier to the new ‘‘B’’ carrier (see Figure 4-41). These straps were left connected to the ‘‘C’’ carrier.
10. Install the eight ground straps between the new ‘‘A’’ and ‘‘B’’ carriers (see Figure 4-41). These straps were removed from the old carriers.
11. See NOTE. For an AC-powered expansion control carrier, install the two new carrier-ground straps. One strap connects ground point ‘‘1’’ to the A-carrier frame (on the right side), and the other connects ground point ‘‘8’’ to the A-carrier frame (on the left side).

    NOTE:
    DC-powered carriers do not use these carrier-ground straps.

12. Connect the loose end of the TDM/LAN cable (between the ‘‘A’’ and ‘‘D’’ carriers) to the pin-field block marked ‘‘TDM’’ on the right side of the ‘‘A’’ carrier (see Figure 4-43 and Table 4-10). The other end remained connected to the ‘‘D’’ carrier when the old carrier was removed.
13. Connect the loose end of the TDM/LAN cable (between the ‘‘B’’ and ‘‘C’’ carriers) to the pin-field block marked ‘‘TDM’’ on the right side of the ‘‘B’’ carrier. The other end remained connected to the ‘‘C’’ carrier when the old carrier was removed.
14. Install the TDM/LAN cable between the ‘‘A’’ and ‘‘B’’ carriers. The cable is connected to the ‘‘A’’ and ‘‘B’’ carriers at the pin-field blocks marked ‘‘TDM’’ on the left side of each carrier.

Table 4-10. TDM/LAN Connections

‘‘J’’ Number	Carrier Type	LHS Slot	RHS Slot
J58890BB-1	Port	21	02
J58890BB-2	Port	21	01
J58890BB-3	Port	21	01
J58890AF	EPN Control ‘‘A’’	21	02

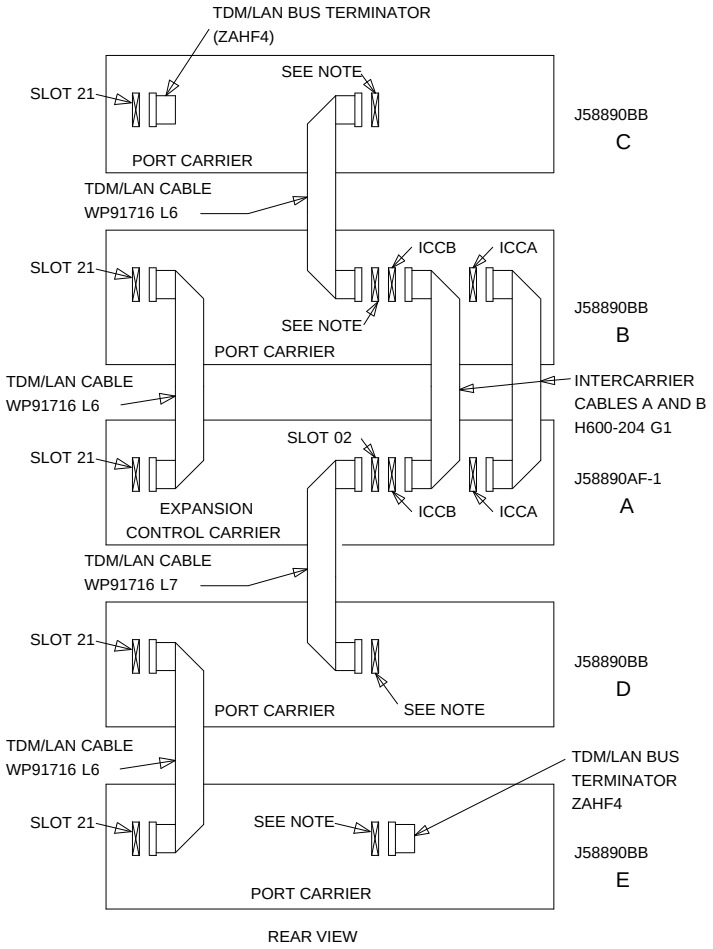

NOTE:
ON PORT CARRIER J58890BB-1, CONNECT TDM/LAN CABLE OR TDM/LAN TERMINATOR TO SLOT 02.
ON PORT CARRIERS J58890BB-2 AND -3, CONNECT THE TDM/LAN CABLE OR TDM/LAN TERMINATOR TO SLOT 01.

Figure 4-43. TDM/LAN Connections for Critical-Reliability G3r V4 EPN

15. Install the front trim plates; first on the ‘‘A’’ carrier, and then on the ‘‘B’’ carrier.

16. See CAUTION. Install the ICC cables (H600-204 G1) between carriers “A’’ and ‘‘B.’’ Connect the cables to the ‘‘ICC’’ pin-field block on both carriers (see Table 4-11 and Figure 4-44 and Figure 4-45). The cable is installed so that the dark red, blue, or purple stripe (depending on the supplier) is on the bottom at both ends.

    CAUTION:
    While installing the ICC cable connectors, be careful not to bend any backplane pins. Double check each connection to verify that the pins are straight.

17. Install the power units (removed from G1 or G3i) into the ‘‘A’’ carrier. There are four different pairs of power units available. They are the 631AR1 and 631BR1, the 631WA1 and 631WB1, the 631DA1 and 631DB1, and the 644A and 645B.

    Do not interchange the physical locations of the units. The 631AR1, 631WA1, 631DA1 or 644A are installed in the left side, while the 631BR1, 631WB1, 631DB1 or 645B are installed in the right side (see Figure 4-46).

18. If the expansion control carrier contains a 631BR1, 631WB1, or 645B power unit, install the previously removed TN736 power unit in port slots ‘‘18’’ and ‘‘19’’ of the carrier (adjacent to the 631BR1, 631WB1, or 645B). If the system is equipped for neon message waiting, a TN752 or TN755 power unit must be used.

    NOTE:
    The TN736 is not required when the 631DB1 or 645B power unit is used in the J58890AH control carrier or the J58890BB-2 or J58890BB-3 port carriers. It is required in the J58890BB-1 port carrier regardless of which 631 power unit is provided. Use the TN752 or TN755 if the system is equipped with neon message waiting.

19. Connect the power cords to the power units. The power cords are the white cables equipped with plugs that are run through the slots in the front of each carrier (see Figure 4-47).

Table 4-11. Intercarrier Cable Connections

Connect ICC Cables				
	From		To	
	Carrier	Pin-Field Block	Carrier	Pin-Field Block
EPN	J58890AF	ICCA ICCB	J58890BB	ICCA ICCB

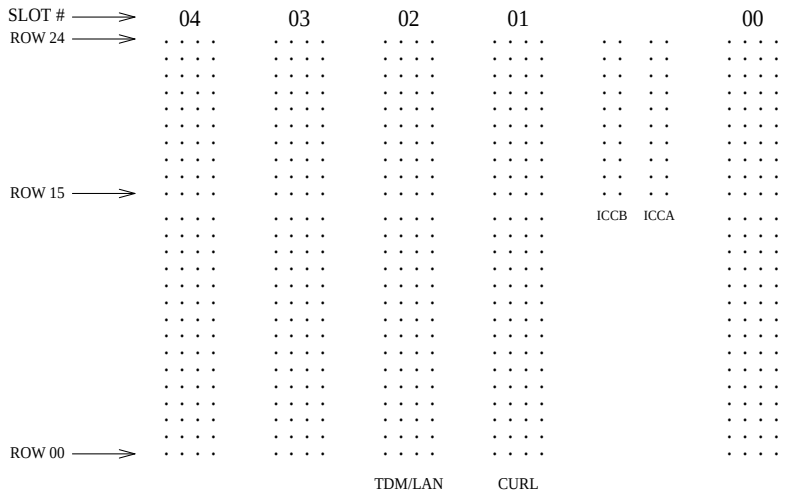

Figure 4-44. ICC Connections for Expansion Control Carrier

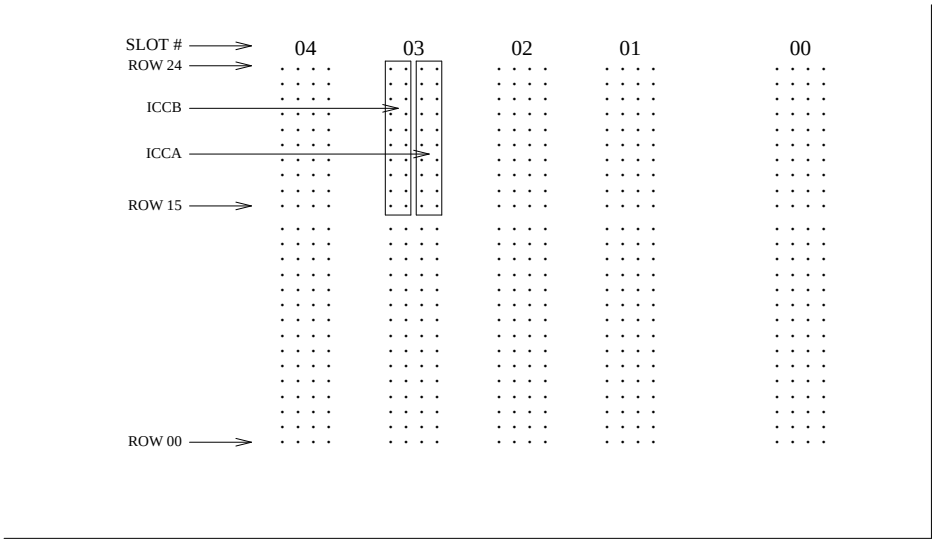

Figure 4-45. ICC Connections for Port Carrier

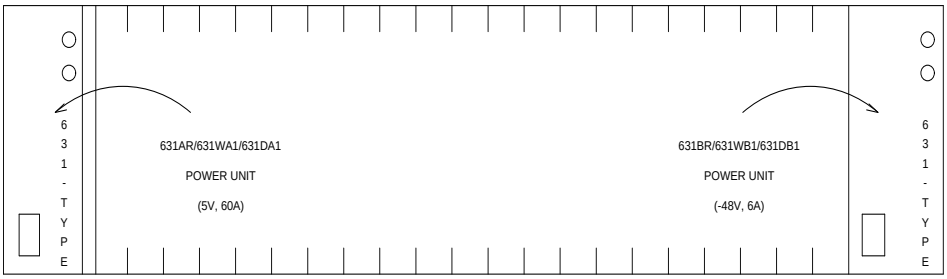

Figure 4-46. Locations of Power Units

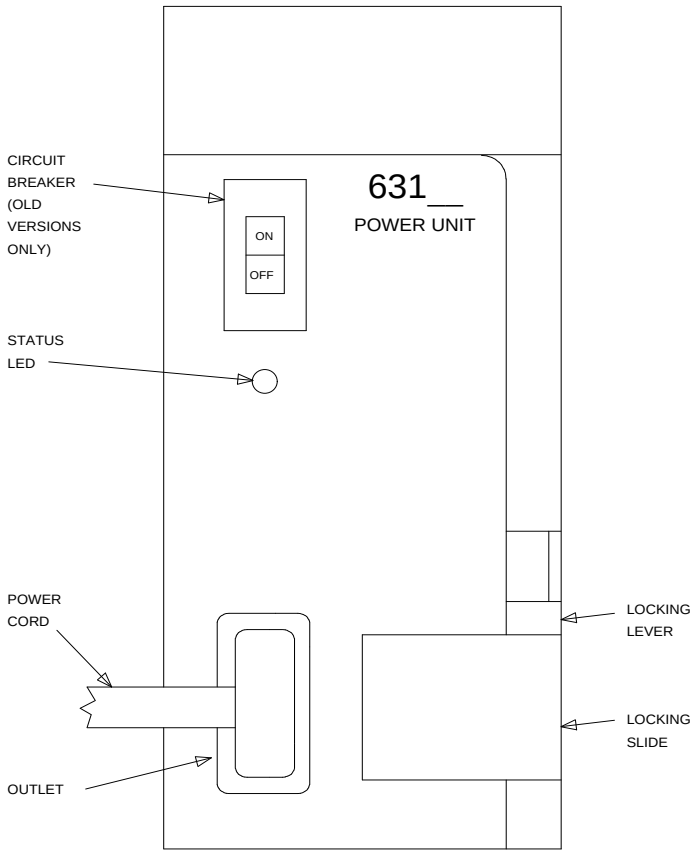

Figure 4-47. 631-Type Power Unit

Test the CURL

1. Plug the cabinet power cord into the appropriate receptacle.
2. At the power-distribution unit, set the main circuit breaker to ON.
3. Unplug the power cord from the power unit ‘‘B’’ (right-hand side) in the ‘‘A’’ carrier.
4. Verify the fans continue running. If they are not running, check the installation of the CURL.
5. Reconnect the power cord to the power unit in the ‘‘A’’ carrier, then unplug the power cord from power unit ‘‘B’’ (right-hand side) in the ‘‘B’’ carrier.
6. Verify the fans continue running. If they are not running, check the installation of the CURL.
7. Reconnect the power cord to the power unit in the ‘‘B’’ carrier.
8. At the power-distribution unit, set the main circuit breaker to OFF.

Install Circuit Packs

1. See WARNING. Install the new G3r V4 control circuit packs into carriers ‘‘A’’ and ‘‘B.’’ Use the following figure, the new decal, and the annotated ‘‘list configuration all’’ (provided with the G3r V4 tape) as a guide.

   WARNING:
   Before inserting or removing a circuit pack from a cabinet, put on a wrist strap and attach its plug or clip to the cabinet’s frame.

2. See preceding WARNING and following WARNING and NOTE. Install the port circuit packs previously removed into the ‘‘A’’ carrier using the decal and the annotated ‘‘list configuration all’’ (provided with the G3r V4 tape) as a guide.

   WARNING:
   These installed port circuit packs must conform to the usable vintage requirements for a G3r V4 system (see Reference Guide for Circuit-Pack Vintages and Change Notices).

   NOTE:
   Since the new G3r V4 expansion control carrier has eleven more port slots than the removed control carrier, there should not be a need to move and retranslate these circuit packs.

   For G1 systems without an EPN, if a port circuit pack was located in slot ‘‘01’’ of control carrier ‘‘A,’’ the STS software upgrade retranslated this circuit pack to occupy an empty port slot in the new expansion control carrier.

3. See preceding WARNINGS and NOTE. Install the port circuit packs previously removed into the ‘‘B’’ carrier using the decal and the annotated ‘‘list configuration all’’ (provided with the G3r V4 tape) as a guide.

4. For a directly connected critical-reliability G3r V4 system with two port networks, ensure that the PPN and this EPN are both equipped with two TN570 expansion interface circuit packs.

   For a directly connected system with three port networks, ensure that the PPN and each EPN have four TN570s.

   For a CSS-connected system, ensure that each port network has two TN570s and that both switch node carriers have one TN573 for each port network.

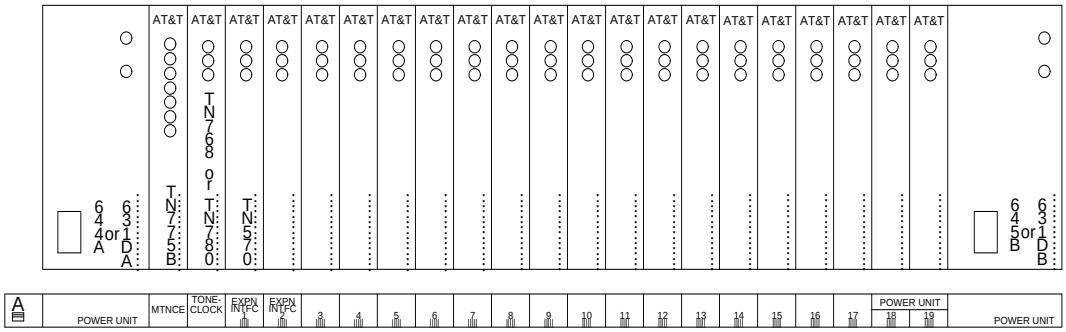

Figure 4-48. Circuit-Pack Locations in G3r V4 Expansion Control Carrier

Interconnect Port Networks — Critical-Reliability System

See NOTES. Fiber-optic cabling terminated to the various lightwave transceivers can interconnect port networks (PNs) to various maximum distances:

- 9823A transceivers can support fiber connections up to 4,900 ft. (about 0.9 miles)
- 9823B transceivers can support fiber connections up to 25,000 ft (about 4.7 miles)

When available and whenever the desired distance between the port networks is less than 25,000 feet, fiber is the preferred medium for interconnecting port networks, providing significantly higher-bandwidth connectivity than DS1C remoting.

NOTE:
As always, these distance limitations are approximate measurements of the *actual* fiber right-of-way (not of the shortest linear distance) between the two endpoints.

NOTE:
It is important to label every cable that you install. For details, refer to the section, *Labels for Fiber-Optic Cables*, in Appendix E of the installation manual.

NOTE:
Throughout these procedures, remember to keep track of which fiber is attached to which connector on each lightwave transceiver. This section provides figures offering the suggested way of making these connections.

The connectors on the lightwave transceivers are labeled either “TX” (transmit) or “RX” (receive), while the fibers attached to each connector are numbered either ‘‘1’’ or ‘‘2.’’ A viable fiber connection is only made when both fibers in each cable (that is, ‘‘1’’ and ‘‘2’’) route from the “TX” connector of a port network to the “RX’’ connector of its adjacent port network. For an example, refer to Figure 4-50.)

NOTE:
For implementation details, refer to the ‘‘Fiber Link Administration’’ sections of *DEFINITY Communications System Generic 3 V4 Implementation*, 555-230-655.

Collocated Port Networks

For a critical-reliability system with one collocated expansion port network, two fiber-optic cables (FL2P-P-XX) and four lightwave transceivers (9823-type) are required to directly connect the networks.

For a critical-reliability system with two collocated expansion port networks, six fiber-optic cables (FL2P-P-XX) and twelve lightwave transceivers (9823-type) are required to directly connect the networks.

NOTE:
For the FL2P-P-XX fiber-optic cable, the -XX suffix represents the length of the cable in feet. Based on floor-plan considerations, the length of these cables may vary. However, 20-foot cables are normally adequate for a G3r V4 with two port networks.

See NOTE. For collocated cabinets, the fiber-optic cables should be routed directly from the PPN to the EPN cabinet. If, for this upgrade, a ‘‘DEFINITY style’’ PPN cabinet is collocated with another ‘‘DEFINITY style’’ EPN cabinet, the preferred routing is to run the cables *up* the cable tray and out the top of the PPN cabinet. The cables are then run to the other cabinet, through the top of the cabinet, and down the cable tray to the desired carrier level.

NOTE:
Refer to Appendix E of *DEFINITY Communications System Generic 1 and Generic 3 Installation and Test*, 555-230-104, Issue 5, for additional guidelines about fiber routing.

If, for this upgrade, a ‘‘DEFINITY style’’ PPN cabinet is collocated with either a small cabinet, medium cabinet, or single-carrier cabinet stack, the preferred routing is to run the cables *down* the cable tray and out the bottom of the PPN cabinet. The cables are then run to the EPN cabinet and up the outside of the rear panels to the desired carrier level.

NOTE:
Within this chapter, the step-by-step instructions will assume that every port network in the system is a ‘‘DEFINITY style’’ cabinet.

Fiber-Remoted Port Networks

For a critical-reliability system with one fiber-remoted expansion port network, four fiber-optic cables (FL2P-P-XX), four lightwave transceivers (9823-type), and four lightwave-interface units (provided by the PSC) are required.

For a critical-reliability system with two fiber-remoted expansion port networks, twelve fiber-optic cables (FL2P-P-XX), twelve lightwave transceivers (9823-type), and twelve lightwave-interface units (provided by the PSC) are required.

For fiber-remoted cabinets, the cables should be routed down the cable tray and out the bottom of the cabinet to the cross-connect field where the lightwave-interface units are located.

DS1C-Remoted Port Networks

For a critical-reliability system with one DS1C-remoted expansion port network, this arrangement requires:

- Four DS1C circuit packs (TN574)
- Four DS1C-to-EI cables (846448637 and/or 846448645)
- Four H-600-348 cables
- Two, four, six, or eight pairs of channel service units (CSUs)
- Two, four, six, or eight pairs of wall-field cables (provided with the CSUs)

For a critical-reliability system with two DS1C-remoted expansion port networks, this arrangement requires:

- 12 DS1C circuit packs (TN574)
- 12 DS1C-to-EI cables (846448637 and/or 846448645)
- 12 H-600-348 cables
- 6, 12, 18, or 24 pairs of channel service units (CSUs)
- 6, 12, 18, or 24 pairs of wall-field cables (provided with the CSUs)

In any case, use cable ties to secure the cable against the walls of the cable tray at the cable-tie positions built into the trays.

For Either One or Two Collocated Expansion Port Networks

1. Behind port carrier C of PPN cabinet 1 (see Figure 4-49 through Figure 4-52):
   - Install a 9823-type lightwave transceiver on cable connector at slot 1C02.
   - Connect one end of the fiber-optic cable to the lightwave transceiver, just installed, at slot 1C02.
   - Delicately attach the fiber-optic cable (with cable ties) to the wall of the cable tray at the built-in cable-tie positions.
2. Behind port carrier B of EPN cabinet 2:
   - Install the same kind (either 9823-A or 9823-B) of lightwave transceiver on cable connector at slot 2B02.
   - Connect the other end of the fiber-optic cable to the lightwave transceiver, just installed, at slot 2B02.
   - Delicately attach the fiber-optic cable (with cable ties) to the wall of the cable tray at the built-in cable-tie positions.
   - At the top of the cabinet, coil up the surplus length of fiber-optic cable, and delicately attach the coil to the wall of the cable tray.
3. Behind port carrier D of PPN cabinet 1:
   - Install a 9823-type lightwave transceiver on cable connector at slot 1D02.
   - Connect one end of the fiber-optic cable to the lightwave transceiver, just installed, at slot 1D02.
   - Delicately attach the fiber-optic cable (with cable ties) to the wall of the cable tray at the built-in cable-tie positions.
4. Behind control carrier A of EPN cabinet 2:
   - Install the same kind (either 9823-A or 9823-B) of lightwave transceiver on cable connector at slot 2A01.
   - Connect the other end of the fiber-optic cable to the lightwave transceiver, just installed, at slot 2A01.
   - Delicately attach the fiber-optic cable (with cable ties) to the wall of the cable tray at the built-in cable-tie positions.
   - At the top of the cabinet, coil up the surplus length of fiber-optic cable, and delicately attach the coil to the wall of the cable tray.

For Two Collocated Expansion Port Networks

1. Behind port carrier C of PPN cabinet 1:
   - Install a 9823-type lightwave transceiver on cable connector at slot 1C03.
   - Connect one end of the fiber-optic cable to the lightwave transceiver, just installed, at slot 1C03.
   - Delicately attach the fiber-optic cable (with cable ties) to the wall of the cable tray at the built-in cable-tie positions.
2. Behind port carrier B of EPN cabinet 3:
   - Install the same kind (either 9823-A or 9823-B) of lightwave transceiver on cable connector at slot 3B02.
   - Connect the other end of the fiber-optic cable to the lightwave transceiver, just installed, at slot 3B02.
   - Delicately attach the fiber-optic cable (with cable ties) to the wall of the cable tray at the built-in cable-tie positions.
   - At the top of the cabinet, coil up the surplus length of fiber-optic cable, and delicately attach the coil to the wall of the cable tray.
3. Behind port carrier D of PPN cabinet 1:
   - Install a 9823-type lightwave transceiver on cable connector at slot 1D03.
   - Connect one end of the fiber-optic cable to the lightwave transceiver, just installed, at slot 1D03.
   - Delicately attach the fiber-optic cable (with cable ties) to the wall of the cable tray at the built-in cable-tie positions.
4. Behind control carrier A of EPN cabinet 3:
   - Install the same kind (either 9823-A or 9823-B) of lightwave transceiver on cable connector at slot 3A01.
   - Connect the other end of the fiber-optic cable to the lightwave transceiver, just installed, at slot 3A01.
   - Delicately attach the fiber-optic cable (with cable ties) to the wall of the cable tray at the built-in cable-tie positions.
   - At the top of the cabinet, coil up the surplus length of fiber-optic cable, and delicately attach the coil to the wall of the cable tray.

5. Behind control carrier A of EPN cabinet 2:
   - Install a 9823-type lightwave transceiver on cable connector at slot 2A02.
   - Connect one end of the fiber-optic cable to the lightwave transceiver, just installed, at slot 2A02.
   - Delicately attach the fiber-optic cable (with cable ties) to the wall of the cable tray at the built-in cable-tie positions.
6. Behind control carrier A of EPN cabinet 3:
   - Install the same kind (either 9823-A or 9823-B) of lightwave transceiver on cable connector at slot 3A02.
   - Connect the other end of the fiber-optic cable to the lightwave transceiver, just installed, at slot 3A02.
   - Delicately attach the fiber-optic cable (with cable ties) to the wall of the cable tray at the built-in cable-tie positions.
   - At the top of the cabinet, coil up the surplus length of fiber-optic cable, and delicately attach the coil to the wall of the cable tray.
7. Behind port carrier B of EPN cabinet 2:
   - Install a 9823-type lightwave transceiver on cable connector at slot 2B03.
   - Connect one end of the fiber-optic cable to the lightwave transceiver, just installed, at slot 2B03.
   - Delicately attach the fiber-optic cable (with cable ties) to the wall of the cable tray at the built-in cable-tie positions.
8. Behind port carrier B of EPN cabinet 3:
   - Install the same kind (either 9823-A or 9823-B) of lightwave transceiver on cable connector at slot 3B03.
   - Connect the other end of the fiber-optic cable to the lightwave transceiver, just installed, at slot 3B03.
   - Delicately attach the fiber-optic cable (with cable ties) to the wall of the cable tray at the built-in cable-tie positions.
   - At the top of the cabinet, coil up the surplus length of fiber-optic cable, and delicately attach the coil to the wall of the cable tray.

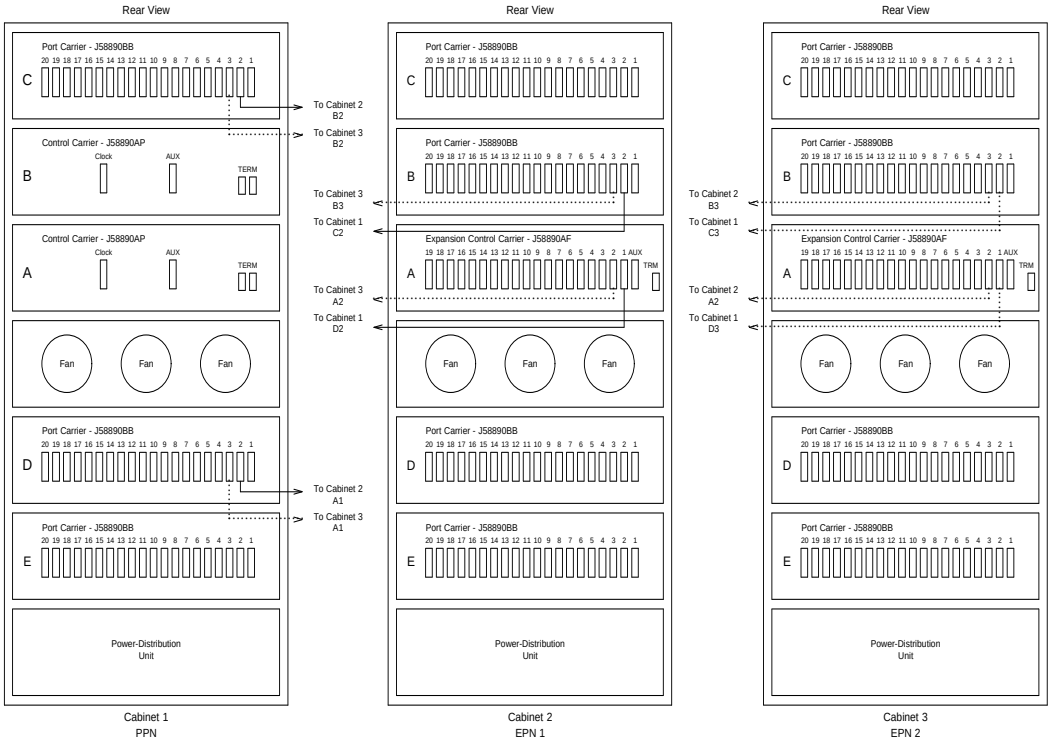

Figure 4-49. Critical-Reliability G3r V4 with Two or Three Port Networks

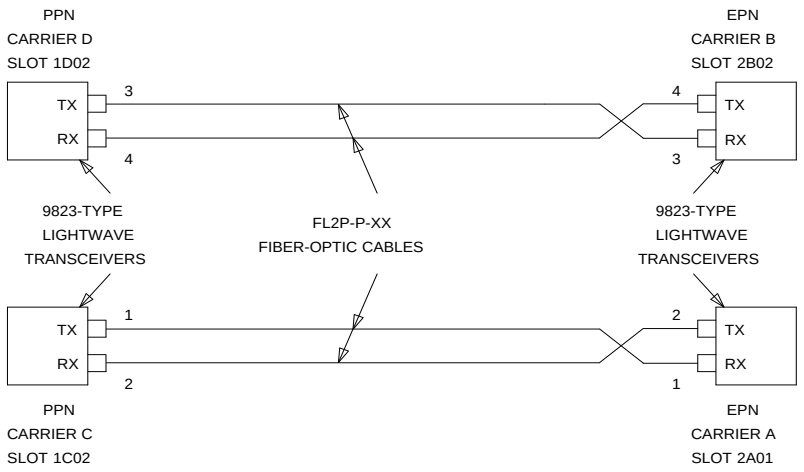

Figure 4-50. Fiber-Optic Connections PPN to EPN1

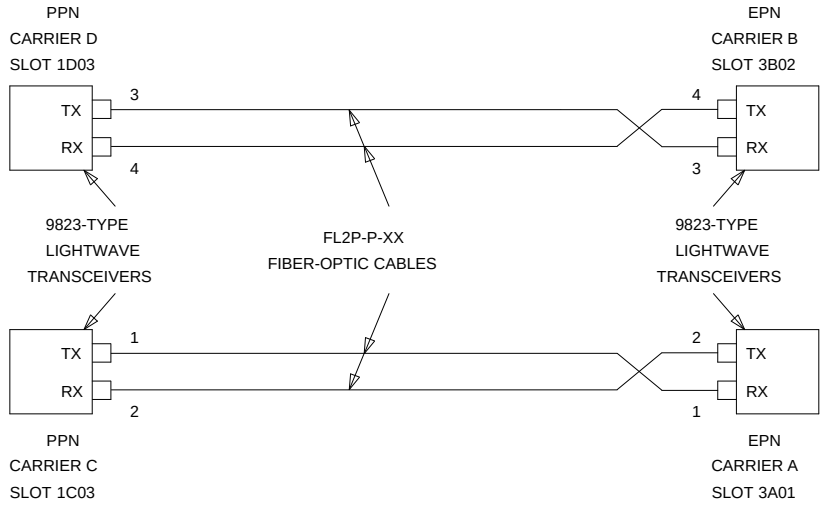

Figure 4-51. Fiber-Optic Connections PPN to EPN2

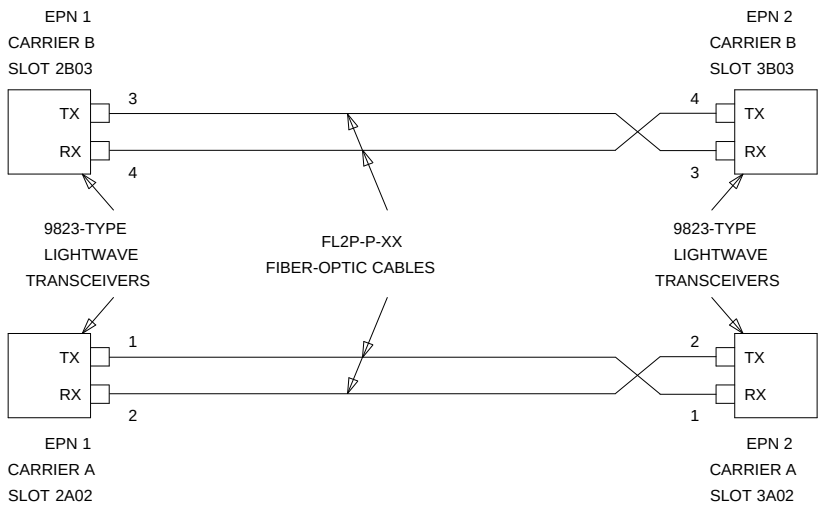

Figure 4-52. Fiber-Optic Connections EPN1 to EPN2

For Either One or Two Fiber-Remoted Expansion Port Networks

1. Behind port carrier C of PPN cabinet 1 (see Figure 4-53 through Figure 4-56):
   - Install a 9823-type lightwave transceiver on cable connector at slot 1C02.
   - Connect one end of the fiber-optic cable to the lightwave transceiver at slot 1C02.
   - Route the fiber-optic cable from the lightwave transceiver to the cabinet's cable tray and downward out of the cabinet through the cable manager to the PDS cross-connect facility.
   - At the PDS cross-connect facility, connect the fiber-optic cable to the lightwave-interface unit provided.
   - Delicately attach the fiber-optic cable (with cable ties) to the wall of the cable tray at the built-in cable-tie positions.
2. Behind port carrier B of EPN cabinet 2:
   - Install the same kind (either 9823-A or 9823-B) of lightwave transceiver on cable connector at slot 2B02.
   - Connect the fiber-optic cable to the lightwave transceiver slot 2B02.
   - Route the fiber-optic cable from the lightwave transceiver to the cabinet's cable tray and downward out of the cabinet through the cable manager to the PDS cross-connect facility.
   - At the PDS cross-connect facility, connect the fiber-optic cable to the lightwave-interface unit provided.
   - Delicately attach the fiber-optic cable (with cable ties) to the wall of the cable tray at the built-in cable-tie positions.
   - Coil up the surplus length of fiber-optic cable, and place the coil in the cable manager.
3. Behind port carrier D of PPN cabinet 1:
   - Install a 9823-type lightwave transceiver on cable connector at slot 1D02.
   - Connect one end of the fiber-optic cable to the lightwave transceiver at slot 1D02.
   - Route the fiber-optic cable from the lightwave transceiver to the cabinet's cable tray and downward out of the cabinet through the cable manager to the PDS cross-connect facility.
   - At the PDS cross-connect facility, connect the fiber-optic cable to the lightwave-interface unit provided.

- Delicately attach the fiber-optic cable (with cable ties) to the wall of the cable tray at the built-in cable-tie positions.

4. Behind control carrier A of EPN cabinet 2:
   - Install the same kind (either 9823-A or 9823-B) of lightwave transceiver on cable connector at slot 2A01.
   - Connect the fiber-optic cable to the lightwave transceiver slot 2A01.
   - Route the fiber-optic cable from the lightwave transceiver to the cabinet's cable tray and downward out of the cabinet through the cable manager to the PDS cross-connect facility.
   - At the PDS cross-connect facility, connect the fiber-optic cable to the lightwave-interface unit provided.
   - Delicately attach the fiber-optic cable (with cable ties) to the wall of the cable tray at the built-in cable-tie positions.
   - Coil up the surplus length of fiber-optic cable, and place the coil in the cable manager.

For Two Fiber-Remoted Expansion Port Networks

1. Behind port carrier C of PPN cabinet 1:
   - Install a 9823-type lightwave transceiver on cable connector at slot 1C03.
   - Connect one end of the fiber-optic cable to the lightwave transceiver at slot 1C03.
   - Route the fiber-optic cable from the lightwave transceiver to the cabinet's cable tray and downward out of the cabinet through the cable manager to the PDS cross-connect facility.
   - At the PDS cross-connect facility, connect the fiber-optic cable to the lightwave-interface unit provided.
   - Delicately attach the fiber-optic cable (with cable ties) to the wall of the cable tray at the built-in cable-tie positions.
2. Behind port carrier B of EPN cabinet 3:
   - Install the same kind (either 9823-A or 9823-B) of lightwave transceiver on cable connector at slot 3B02.
   - Connect the fiber-optic cable to the lightwave transceiver slot 3B02.
   - Route the fiber-optic cable from the lightwave transceiver to the cabinet's cable tray and downward out of the cabinet through the cable manager to the PDS cross-connect facility.
   - At the PDS cross-connect facility, connect the fiber-optic cable to the lightwave-interface unit provided.
   - Delicately attach the fiber-optic cable (with cable ties) to the wall of the cable tray at the built-in cable-tie positions.

- Coil up the surplus length of fiber-optic cable, and place the coil in the cable manager.

3. Behind port carrier D of PPN cabinet 1:
   - Install a 9823-type lightwave transceiver on cable connector at slot 1D03.
   - Connect one end of the fiber-optic cable to the lightwave transceiver at slot 1D03.
   - Route the fiber-optic cable from the lightwave transceiver to the cabinet's cable tray and downward out of the cabinet through the cable manager to the PDS cross-connect facility.
   - At the PDS cross-connect facility, connect the fiber-optic cable to the lightwave-interface unit provided.
   - Delicately attach the fiber-optic cable (with cable ties) to the wall of the cable tray at the built-in cable-tie positions.
4. Behind control carrier A of EPN cabinet 3:
   - Install the same kind (either 9823-A or 9823-B) of lightwave transceiver on cable connector at slot 3A01.
   - Connect the fiber-optic cable to the lightwave transceiver slot 3A01.
   - Route the fiber-optic cable from the lightwave transceiver to the cabinet's cable tray and downward out of the cabinet through the cable manager to the PDS cross-connect facility.
   - At the PDS cross-connect facility, connect the fiber-optic cable to the lightwave-interface unit provided.
   - Delicately attach the fiber-optic cable (with cable ties) to the wall of the cable tray at the built-in cable-tie positions.
   - Coil up the surplus length of fiber-optic cable, and place the coil in the cable manager.
5. Behind control carrier A of EPN cabinet 2:
   - Install a 9823-type lightwave transceiver on cable connector at slot 2A02.
   - Connect one end of the fiber-optic cable to the lightwave transceiver at slot 2A02.
   - Route the fiber-optic cable from the lightwave transceiver to the cabinet's cable tray and downward out of the cabinet through the cable manager to the PDS cross-connect facility.
   - At the PDS cross-connect facility, connect the fiber-optic cable to the lightwave-interface unit provided.
   - Delicately attach the fiber-optic cable (with cable ties) to the wall of the cable tray at the built-in cable-tie positions.

6. Behind control carrier A of EPN cabinet 3:
   - Install the same kind (either 9823-A or 9823-B) of lightwave transceiver on cable connector at slot 3A02.
   - Connect the fiber-optic cable to the lightwave transceiver at slot 3A02.
   - Route the fiber-optic cable from the lightwave transceiver to the cabinet's cable tray and downward out of the cabinet through the cable manager to the PDS cross-connect facility.
   - At the PDS cross-connect facility, connect the fiber-optic cable to the lightwave-interface unit provided.
   - Delicately attach the fiber-optic cable (with cable ties) to the wall of the cable tray at the built-in cable-tie positions.
   - Coil up the surplus length of fiber-optic cable, and place the coil in the cable manager.
7. Behind port carrier B of EPN cabinet 2:
   - Install a 9823-type lightwave transceiver on cable connector at slot 2B03.
   - Connect one end of the fiber-optic cable to the lightwave transceiver at slot 2B03.
   - Route the fiber-optic cable from the lightwave transceiver to the cabinet's cable tray and downward out of the cabinet through the cable manager to the PDS cross-connect facility.
   - At the PDS cross-connect facility, connect the fiber-optic cable to the lightwave-interface unit provided.
   - Delicately attach the fiber-optic cable (with cable ties) to the wall of the cable tray at the built-in cable-tie positions.
8. Behind port carrier B of EPN cabinet 3:
   - Install the same kind (either 9823-A or 9823-B) of lightwave transceiver on cable connector at slot 3B03.
   - Connect the fiber-optic cable to the lightwave transceiver at slot 3B03.
   - Route the fiber-optic cable from the lightwave transceiver to the cabinet's cable tray and downward out of the cabinet through the cable manager to the PDS cross-connect facility.
   - At the PDS cross-connect facility, connect the fiber-optic cable to the lightwave-interface unit provided.
   - Delicately attach the fiber-optic cable (with cable ties) to the wall of the cable tray at the built-in cable-tie positions.
   - Coil up the surplus length of fiber-optic cable, and place the coil in the cable manager.

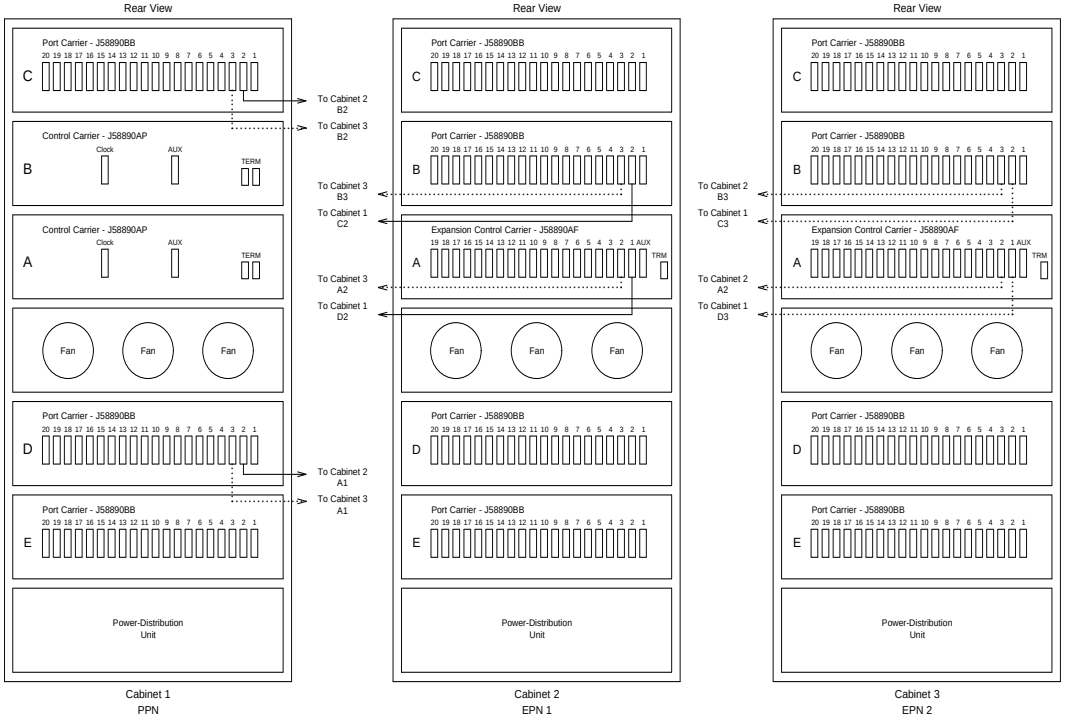

Figure 4-53. Critical-Reliability G3r V4 with Two or Three Port Networks

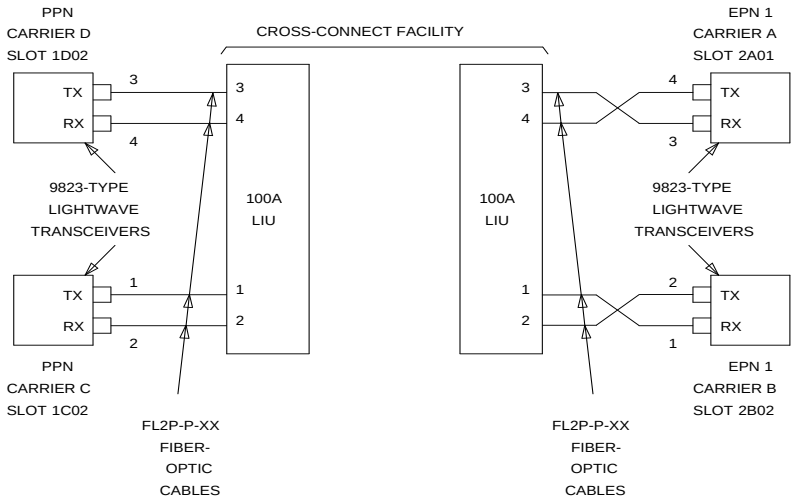

Figure 4-54. Fiber-Optic Connections PPN to EPN1

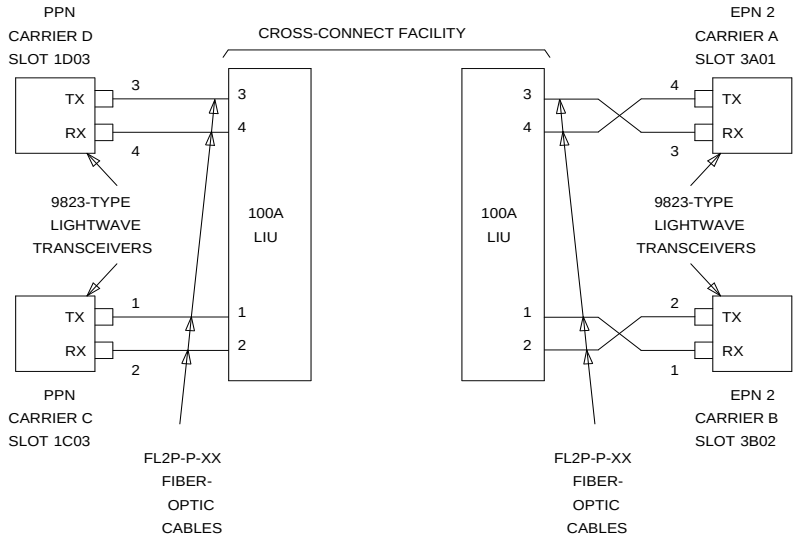

Figure 4-55. Fiber-Optic Connections PPN to EPN2

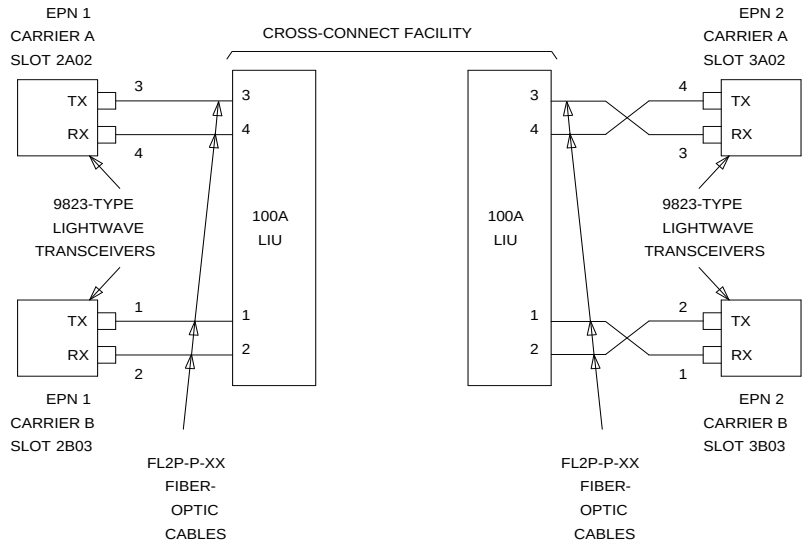

Figure 4-56. Fiber-Optic Connections EPN1 to EPN2

For One to Fifteen Switch-Connected Expansion Port Networks

1. Behind the PPN cabinet (see Figure 4-57):
   - Install a 9823-type lightwave transceiver on cable connector at slot 1E01.
   - Install a 9823-type lightwave transceiver on cable connector at slot 1E02.
   - Connect the metallic intracarrier cable to the lightwave transceivers at slots 1E01 and 1E02.
   - Install a 9823-type lightwave transceiver on cable connector at slot 1D01.
   - Install a 9823-type lightwave transceiver on cable connector at slot 1D02.
   - Connect the metallic intracarrier cable to the lightwave transceivers at slots 1D01 and 1D02.
2. Behind switch node carrier E of PPN cabinet 1:
   - For each EPN, install one 9823-type lightwave transceiver on a cable connector with the following order of slots: 1E20, 1E03, 1E19, 1E04, 1E18, 1E05, etc.

- Connect one end of each fiber-optic cable to each lightwave transceiver, just installed.
- Delicately attach the fiber-optic cables (with cable ties) to the wall of the cable tray at the built-in cable-tie positions.

3. Behind control carrier A of each EPN cabinet:
   - Install the same kind (either 9823-A or 9823-B) of lightwave transceiver on cable connector at slot A01.
   - Connect the other end of the fiber-optic cable to the lightwave transceiver, just installed, at slot A01.
   - Delicately attach the fiber-optic cable (with cable ties) to the wall of the cable tray at the built-in cable-tie positions.
   - At the top of the cabinet, coil up the surplus length of fiber-optic cable, and delicately attach the coil to the wall of the cable tray.
4. Behind switch node carrier D of PPN cabinet 1:
   - For each EPN, install one 9823-type lightwave transceiver on a cable connector with the following order of slots: 1E20, 1E03, 1E19, 1E04, 1E18, 1E05, etc.
   - Connect one end of each fiber-optic cable to each lightwave transceiver, just installed.
   - Delicately attach the fiber-optic cables (with cable ties) to the wall of the cable tray at the built-in cable-tie positions.
5. Behind port carrier B of each EPN cabinet:
   - Install the same kind (either 9823-A or 9823-B) of lightwave transceiver on cable connector at slot B02.
   - Connect the other end of the fiber-optic cable to the lightwave transceiver, just installed, at slot B02.
   - Delicately attach the fiber-optic cable (with cable ties) to the wall of the cable tray at the built-in cable-tie positions.
   - At the top of the cabinet, coil up the surplus length of fiber-optic cable, and delicately attach the coil to the wall of the cable tray.

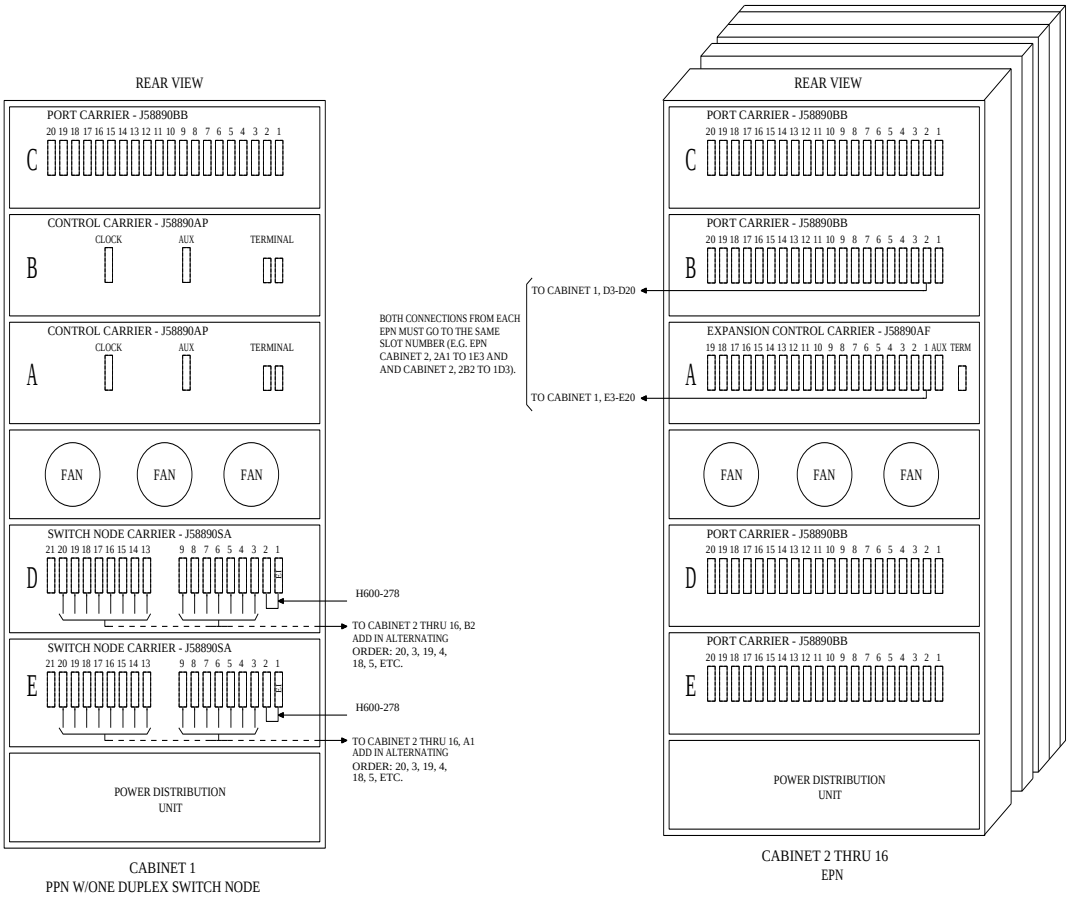

Figure 4-57. Fiber-Optic Connections through Center Stage Switch

DS1C-Remoted Cabinets

See NOTES. Digital Services 1 (DS1) facilities and associated equipment-room hardware and cabling can interconnect two port networks (PNs) located up to 100 miles apart. Although DS1 remoting always serves as a lower-bandwidth alternative to fiber remoting, DS1 remoting is especially attractive when:

- Fiber-optic cabling is unavailable to the remote site
- When the desired distance between the port networks exceeds the practical fiber limit of 25,000 feet (about 4.7 miles)
- Digital Services facilities, with enough bandwidth for interconnection, already exist between the two port networks

NOTE:
As always, these distance limitations are approximate measurements of the *actual* fiber or copper right-of-way (not of the shortest linear distance) between the two endpoints.

NOTE:
The 100-mile limit for DS1 remoting is the maximum distance between *any* two port networks in a G3r V4 system with either direct or switched port-network connections.

For example, in a *directly connected* system, a single EPN can be remoted up to 100 miles. This is because the length of the *direct* fiber connection from any port network in the local equipment room to the remote EPN is 100 miles.

However, if more than one EPN is remoted in a directly connected system, the 100-mile limit applies to any two port networks. Assuming straight cable runs, suppose that a customer wants to remote one EPN 80 miles due east and another EPN due north of the local PPN. This arrangement can only be accommodated if the second EPN resides no more than 60 miles north of the PPN. This is because the direct fiber distance between the two EPNs is also limited to 100 miles.

As another example, in *switch-connected* system with numerous port networks, one EPN might be remoted 75 miles from the switch node. If this were the case, then the maximum distance that any other EPN could be remoted would be 25 miles.

Digital public-network tie-trunk facilities provide the end-to end connectivity between the port networks. For either type of port network (PPN or EPN), a TN574 DS1 Converter (DS1C) circuit pack serves as the port-network interface to the DS1 facilities. As a PPN interface, a TN574 DS1C can reside in either:

- A port carrier (in any port slot)
- A switch-node carrier (in port slot ‘‘1’’ or ‘‘21’’)

As an EPN interface, a TN574 DS1C can reside in an expansion control carrier (in any port slot).

DS1 Cabling within the Local Port Networks. See NOTE. Use the running list that accompanies the upgrade equipment to determine which cable should be connected where. The following paragraphs only provide conceptual information about wiring a DS1C interface either to an expansion interface or to a switch-node interface, not step-by-step procedures for wiring a specific G3r V4 system.

NOTE:
It is important to label every cable that you install. For details, refer to the section, *Labels for Fiber-Optic Cables*, in Appendix E of the installation manual.

See NOTE. As shown in Figure 4-58, a cable connects each DS1C either to the appropriate TN570 expansion interface (for a direct connection to another port network) or to the appropriate TN573 SN Interface (for a switched connection to another port network).

NOTE:
For the purposes of a G1 or G3i to G3r V4 upgrade, these cables will usually connect to TN570 expansion interfaces (already installed) for direct connections between the new PPN and either one or two EPNs.

On the DS1C side, a 4C retainer binds this shielded cable to the DS1C port connector. On the EI/SNI side, a 4B retainer binds the cable to the EI/SNI port connector. The DS1C-to-EI/SNI cable also provides a piggy-back connector enabling subsequent access to the public network. Table 4-5 lists the cable numbers and lengths for the possible connections.

Table 4-12. Numbers and Lengths of DS1C-to-EI/SNI Cables

Connection Type	Comcode Number	Length
Within same carrier	846448637	1 foot
Between two carriers in same port network	846448645	5.5 feet
Between two carriers in adjacent networks	846448652, and one 846885259 bracket	1 foot (used with two 9823As, & one 20-foot fiber-optic cable)

DS1 Cabling to the Public Network. See NOTE. Use the running list that accompanies the upgrade equipment to determine which cable should be connected where. The following paragraphs only provide conceptual information about wiring a DS1C interface to a wall-field block, not step-by-step procedures for wiring a specific G3r V4 system.

NOTE:
It is important to label every cable that you install. For details, refer to the section, *Labels for Fiber-Optic Cables*, in Appendix E of the installation manual.

Figure 4-58 also shows the cabling between various port networks and the cross-connect field where the public network is accessed. If already connected to either an expansion or switch-node interface, a DS1C circuit pack already resides either in an EPN expansion control carrier or in a PPN port carrier or switch-node carrier.

Depending on the traffic requirements between the two port networks, a 25-foot H600-348 cable extends from the piggy-back connector (on each DS1C-to-EI/SNI cable) to from one to four channel service units (CSUs). [This cable branches to four 15-pin subminiature D-type connectors (labeled ‘‘01’’ to ‘‘04’’) to make the CSU connections.] Then, in turn, the CSU(s) are connected to the wall-field block (corresponding to the equipment location of the DS1C) at port connections ‘‘8,’’ ‘‘7,’’ ‘‘6,’’ and ‘‘5’’ (in descending order).

Neglecting overhead, this wiring arrangement can provide PN-to-PN communication at the bandwidth of up to four DS1 spans (1.544 Mbps each). Between each port network’s wall field, the port networks communicate across leased lines in the public network.

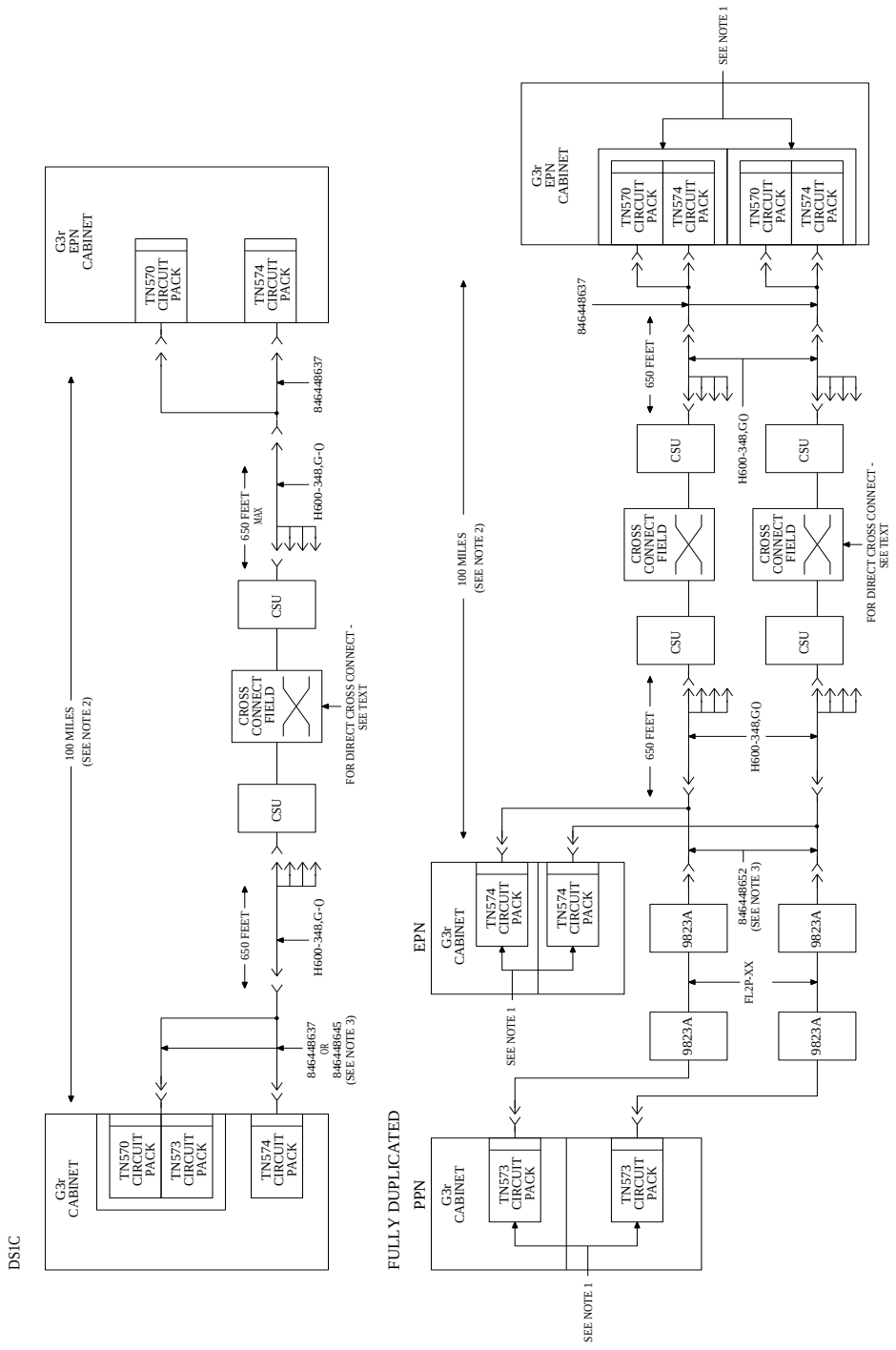

Figure 4-58. DS1 Connectivity betweem Remote PNs

Verify Usable Circuit-Pack Vintages

Verify that every G1 or G3i circuit pack reused in the upgrade conforms to the usable vintage requirements for a G3r V4 system (see Reference Guide for Circuit-Pack Vintages and Change Notices).

Install System Access Ports

As a prerequisite for connecting various endpoints that use EIA interfaces to the G3r V4 system, install the up to eight loop-around connections for Mode 2-to-Mode 3 (and vice versa) data conversion.

From the *outgoing* perspective of the system communicating with an EIA endpoint, these loop-around connections convert Mode 3 data (circuit-switched packet data, with undefined bit rates and packet specifications) to Mode 2 data (low-speed, usually asynchronous, data at rates of 300 to 19,200 bps) by:

- Accepting Mode 3 data off the LAN bus (from the SPE) at a TN553 Packet Data Line circuit pack, where Mode 3-to-Mode 2 conversion is done
- Routing the converted data through the cross-connect field and back to a TN726B Data Line where the equivalent Mode 2 data can access the TDM bus, for subsequent routing to an EIA endpoint

The endpoints that use these EIA interfaces and, therefore, require the Mode 2-to-Mode 3 conversion include:

- DEFINITY Communications System Generic 3 Management Applications (G3-MA)
- Remote DEFINITY Communications System Generic 3 Management Terminal (G3-MT)
- Basic Call Management System (BCMS) terminal
- Call Detail Recording Unit (CDRU)/Centralized Attendant Service Plus (CAS+)
- Property Management System (PMS)
- Printers

The following figures show this loop-around configuration and how the B25A cables are cross-connected.

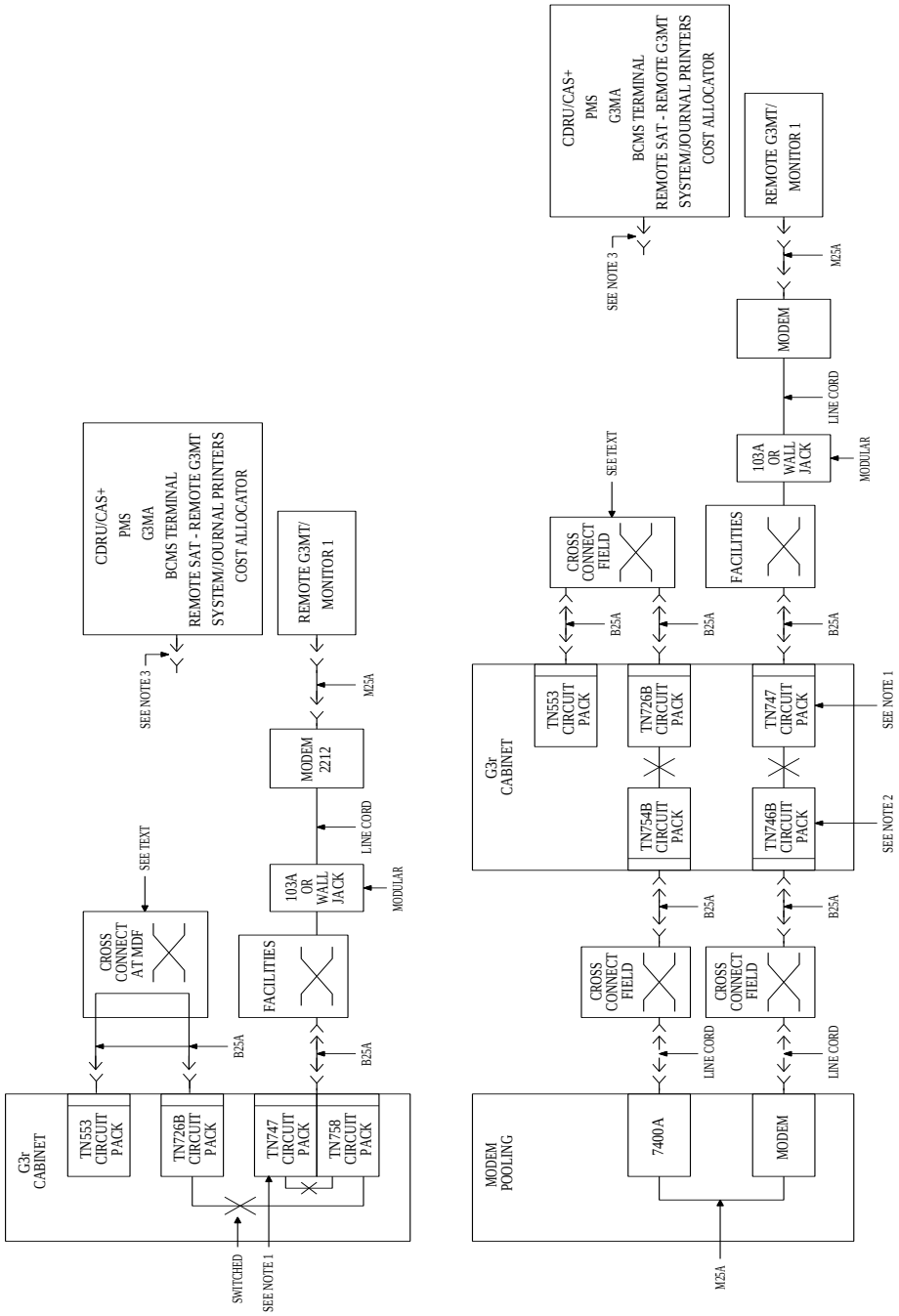

Figure 4-59. Connections: CDRU/CAS+, PMS, BCMS, Printers, G3-MA/MT

Pinouts for the TN553 and TN726B circuit packs shown cross-connected in the preceding figure are given in the table below..

Pinouts

TN553 (12 Ports)

1	26	
2	27	1
3	28	
4	29	2
5	30	
6	31	3
7	32	
8	33	4
9	34	
10	35	5
11	36	
12	37	6
13	38	
14	39	7
15	40	
16	41	8
17	42	
18	43	9
19	44	
20	45	10
21	46	
22	47	11
23	48	
24	49	12
25	50	G

TN726B (8 Ports)

1	26	Blank
2	27	
3	28	1
4	29	Blank
5	30	
6	31	2
7	32	Blank
8	33	
9	34	3
10	35	Blank
11	36	
12	37	4
13	38	Blank
14	39	
15	40	5
16	41	Blank
17	42	
18	43	6
19	44	Blank
20	45	
21	46	7
22	47	Blank
23	48	
24	49	8
25	50	Blank

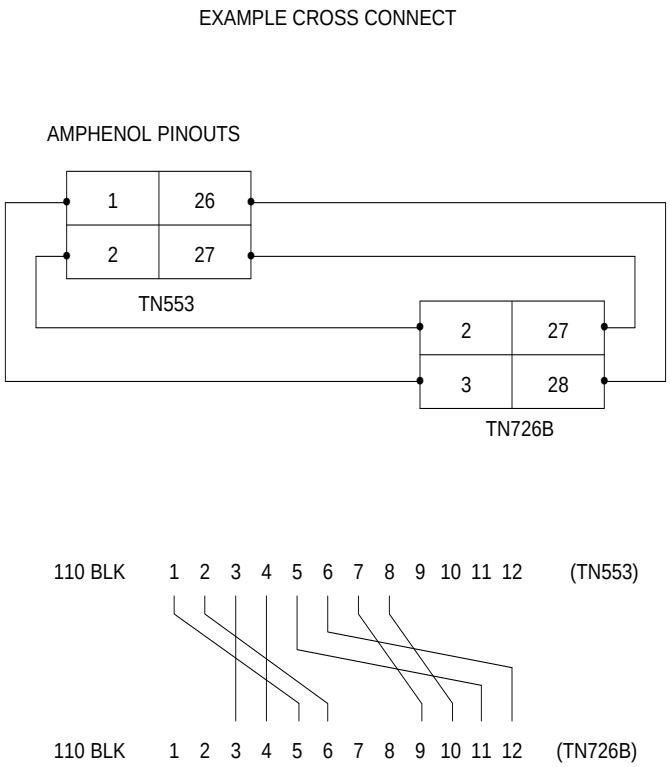

Figure 4-60. Example of Cross Connect betweem TN553 and TN726B

Reseat DEFINITY AUDIX System

See WARNING. If a DEFINITY AUDIX System resides in the system, reseat the AUDIX assembly to its backplane connectors.

WARNING:
Before inserting or removing a circuit pack from a cabinet, put on a wrist strap and attach its plug or clip to the cabinet's frame.

Remove Power-Failure Ground Strap

Remove the ground strap from the power-failure transfer unit.

Reboot the System

1. Connect the G3-MT to the connector labeled ''TERMINAL'' behind PPN control carrier ''A,'' or install the G3-MA according to the ''Set Up G3-MA'' chapter of *DEFINITY Communications System Generic 3 Management Applications — Operations*, 585-229-202.
2. Verify that the new G3r V4 system tape is inserted in the PPN cabinet.
3. At each EPN power-distribution unit, set the main circuit breaker to ON.
4. At the PPN power-distribution unit, set the main circuit breaker to ON.
5. The system now goes through the reset level 4 rebooting process, loading blank translations from the *disk* (not the new tape). Rebooting requires 5 to 11 minutes.
6. Enter **`reset system 4 tape`**. Press (RETURN). This command instructs the system to go through the reset level 4 rebooting process, loading the upgraded STS translations from the new *tape*. Rebooting requires 5 to 11 minutes.

   Refer to ''Initialization and Recovery'' and ''LED Interpretation'' chapters in *DEFINITY Communications System Generic 3r V4 Maintenance*, 555-230-105, Issue 3, for circuit-pack LED indications and screen displays that occur during system reboot.
7. Log in at the `login:` prompt on the G3-MT or G3-MA, and set the time to ensure that the system is booted properly.
8. Enter **`status spe`**, and press (RETURN) to verify that the standby SPE is refreshed and that the standby disk is in service.
9. Enter **`restore disk both full`**. Press (RETURN). This command instructs the system to write the upgraded STS translation information from memory to the disk.
10. Enter **`reset system 4`**. Press (RETURN). This command instructs the system to go through the reset level 4 rebooting process, loading the upgraded STS translations from the *disk*. Rebooting requires 5 to 11 minutes.

NOTE:
Certain forms have changed for G3r V4. Upgraded G1 or G3i translations may appear on a different form, fields may have shifted within a form, and/or the names assigned to particular fields may have changed. Refer to Table 4-1 and Table 4-2, *DEFINITY Communications System Generic 3r Transition Reference*, 555-230-636, and *DEFINITY Communications System Generic 3 V4 Implementation*, 555-230-655, and make the necessary changes.

Relabel Wall Field

If not done during the installation of new PPN, relabel the wall field with the new port-network number of the upgraded G3r V4 EPN. (The STS software upgrade assigned the next port-network number, after the highest-numbered port network in the G1 or G3i system, to the upgraded EPN.)

Close Upgraded EPN Cabinet and Reconnect Cables

1. At the power-distribution unit of the upgraded EPN, set the main circuit breaker to OFF.

   NOTE:
   Powering down an EPN without powering down the PPN will set off alarms. However, these alarms should clear after power is restored to each EPN.

2. Temporarily disconnect the lightwave transceivers and fiber-optic cables, already labeled, from the appropriate carriers.
3. Replace the back doors or back panels previously removed.
4. At the EPN cabinet, reconnect the lightwave transceivers, fiber-optic cables, and the connector cables associated with the carrier being replaced.
5. Install the front door on the EPN cabinet if previously removed.

Power Up the EPN Cabinets

1. At each EPN power-distribution unit, set the main circuit breaker to ON.

   After about 40 seconds, EPN power and PPN/EPN communications return.

2. After power returns to each EPN and all trouble is cleared, verify that the EMERGENCY TRANSFER CONTROL switch is set to AUTO. This restores the system to the normal mode.

Retranslate Port Circuits

If port circuit packs in the G1 control carrier were relocated in order to put:

- A critical port circuit pack, requiring longer nominal battery holdover (e.g., a DS1 or an Announcement circuit pack), in a port slot
- A TN736, TN752, or TN755 power supply in port slots ‘‘18’’ and ‘‘19’’

- A TN570 Expansion Interface in port slot ‘‘1’’
- A TN570 Expansion Interface in port slot ‘‘2’’ (for a second EPN)

of the new expansion control carrier, verify that they were retranslated during the off-site software upgrade. If not, they must be retranslated now. Refer to *DEFINITY Communications System Generic 3 V4 Implementation*, 555-230-655, for instructions on performing the retranslations.

Rerecord Announcements

The off-site STS translation upgrade did not preserve the contents of recorded announcements. Therefore, if a TN750 Annoucement circuit pack resides in the system, any announcements that were stored on the circuit pack must be rerecorded.

Run Acceptance Tests

Refer to Chapter 11 of *DEFINITY Communications System Generic 1 and Generic 3 Installation and Test*, 555-230-104, Issue 5, and perform the appropriate tests.

Register System as G3r V4

Get the serial number of the new G3r V4 PPN, and call the INADS Database Administrator at the Technical Service Center (1-800-248-1111) to register the upgraded system as a G3r V4.

Return Replaced G1 or G3i Equipment

The G1 or G3i equipment replaced, during the upgrade to G3r V4, should be returned to AT&T according to the requirements outlined in:

BCS/Material Logistics, MSL/Attended Stocking Locations

Methods and Procedures for Basic Material Returns

The replaced G1 or G3i equipment includes:

- G1 or G3i control carrier (J58890AH), control circuit packs, and 982LS CURL
- G1 or G3i duplicated control carrier (J58890AJ) and control circuit packs
- G1 or G3i ICC cables (H600-182 G1)
- G1 or G3i tape cartridges
- If G1 or G3i contained an EPN, TN776 expansion interfaces
- 4-series lightwave transceivers

Single-Carrier Cabinet G1 or G3i to G3r V4

5

This chapter provides the information necessary to upgrade a DEFINITY® G1 or G3i system with single-carrier cabinets to a DEFINITY G3r V4 EPN. The hardware and software involved in the upgrades and the upgrade procedures are also provided.

CAUTION:
Be careful to find the right chapter for your upgrade. Using the software- and sometimes the hardware-upgrade PEC on the customer's order, refer to Table 1 in "About This Document" for the correct chapter.

The following processes are required for a G1 or G3i to G3r V4 upgrade:

- Upgrading the hardware

  This involves adding a new multicarrier PPN cabinet, replacing the first single-carrier control cabinet with an expansion control cabinet, replacing a duplicated control cabinet with a port cabinet, and replacing and adding circuit packs

- Replacing the software tape
- Upgrading the software

  This involves saving, loading, and (when necessary) reentering system translations (see Table 5-1 and Table 5-2).

- Testing the upgraded system to verify proper operation

G3r V4 features and functions are listed in the *DEFINITY Communications System Generic 3 Feature Description*, 555-230-204. *DEFINITY Communication System Generic 3 V4 Implementation*, 555-230-655, provides the commands, procedures, and forms required to initialize and administer the G3r V4.

Considerations

Service Interruption

The upgrade process requires a service interruption. This service interruption must be closely coordinated with the customer and the local account team.

Communication betweem Equipment Rooms

For an upgrade where some of the equipment resides at a remote location, the upgrade activity will be much easier if temporary communications are established between the equipment rooms.

Contact Network Technicians

The technician for each public and private network accessed by the switch must be contacted before the upgrade begins. Otherwise, if these technicians are not aware of the service interruption caused by the upgrade, it is possible that network-access trunk facilities will be busied out at the far end.

Relocation of Port Circuit Packs

With the possible exception of a port circuit pack in slot ‘‘01’’ of carrier ‘‘A’’ that must be moved for a TN570 Expansion Interface, a a G1 or G3i upgrade to G3r V4 *does not* cause port circuit packs, from the G1 or G3i control cabinet, to be moved and manually retranslated. This is because a G1 or G3i PPN is always upgraded to an EPN. So, during the PPN upgrade to a G3r V4 EPN, a G3r V4 expansion control cabinet (with 14 to 16 available port slots) always replaces the G1 or G3i control cabinet (with 10 available port slots), providing a net gain of from 4 to 6 port slots.

See NOTE. If a port circuit pack does reside in slot ‘‘01’’ of control cabinet ‘‘A,’’ the STS software upgrade will retranslate this circuit pack to reside in an empty port slot in the new expansion control cabinet.

For an upgrade to a critical-reliability G3r V4, if a port circuit pack resides in slot ‘‘02’’ of port cabinet ‘‘B,’’ the STS software upgrade will retranslate this circuit pack to occupy another empty port slot in the new expansion control cabinet.

Also, to provide maximum holdover for a TN750/B Announcement circuit pack that did not reside in the control carrier of the R1V3 system, the STS software upgrade will relocate this circuit pack to occupy another empty port slot in the new expansion control cabinet.

Also, to ensure reliable DS1 timing in the upgraded G3r V4 system, the STS software upgrade will relocate the DS1 circuit packs serving as the primary and secondary timing sources to occupy two empty port slots in the new multicarrier PPN.

Finally, when adjuncts are connected to an upgraded G3r V4, STS will locate any new interface circuit packs (including TN577 Packet Gateway, TN553 Packet Data, and TN726B Data Line) in the first available slots of the first PPN port carrier.

NOTE:
To find out where STS relocated these circuit packs, refer to the annotated "list configuration all" that STS provided with the new G3r V4 tape.

Usable Circuit-Pack Vintages

Every circuit pack used in the upgraded G3r V4 system must conform to the minimum usable vintage requirements for G3r V4. Those circuit packs shipped in the new G3r V4 PPN or shipped loose with the new EPN equipment should always meet the usable vintage specifications. In addition, at a presale site inspection, the Quality Protection Plan Change Notice (QPPCN) process must check the vintages of every G1 or G3i circuit pack that will be reused in the upgraded G3r V4 and, if necessary, replace those circuit packs that have unusable vintages. Refer to *Technical Monthly*, Reference Guide for Circuit-Pack Vintages and Change Notices, for current information about usable vintages in a G3r V4 system.

Site Inspections

For the purposes of a G3r V4 upgrade, most G1 and G3i systems are already equipped with the correct lightwave transceivers (9823-A or -B). However, some G1 and G3i systems contain earlier versions of these components, and (based on a site inspection) these older components must be replaced.

See NOTE. The earlier versions of lightwave transceivers included the 4-series transceivers (that is, 4A through 4F). These transceivers supported fiber connections up to 7,000 feet apart; whereas the 9823-A supports connections up to 5,000 feet, and the 9823-B supports connections up to 25,000 feet. If the site inspection reveals that the older transceivers reside in the system, the correct transceivers are ordered and shipped according to a separate PEC.

NOTE:
The 9823-A transceiver is *not* a direct replacement for the 4-series transceiver (a pair of 9823-A transceivers *cannot* replace a pair of 4-series transceivers supporting a connection of between 5,000 and 7,000 feet).

Power and Grounding

The new multicarrier PPN cabinet or any EPN cabinet added for the upgrade can be either AC- or DC-powered. If an added cabinet is powered differently from the existing cabinets, the existing cabinets do not have to be converted since mixed power configurations are allowed. However, the system's power and grounding must be modified so that the AC-powered cabinets are grounded to the same single-point ground bar as the DC-powered cabinets (see Figure 5-1).

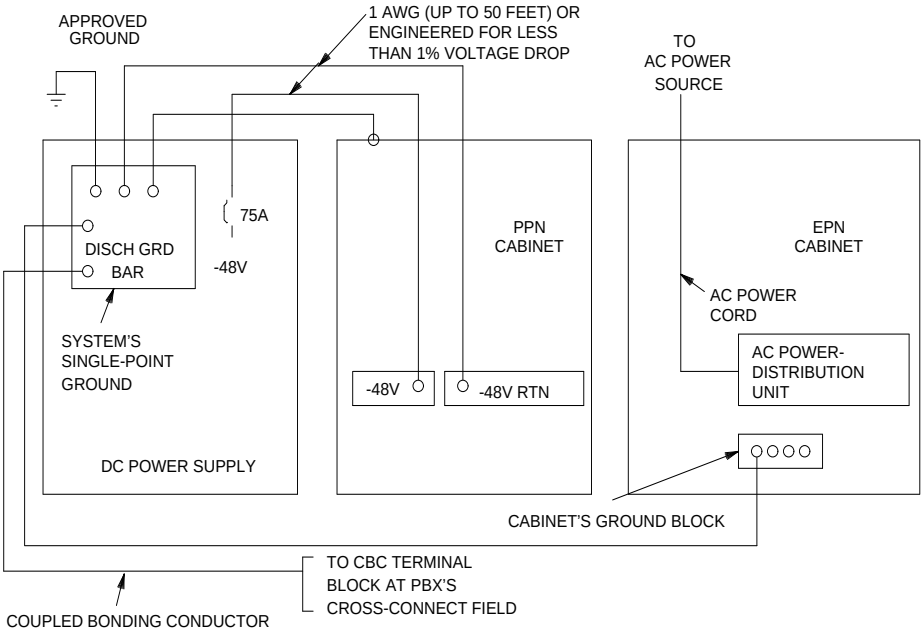

Figure 5-1. Typical Power and Grounding Arrangement for a Mixed AC/DC-Powered Multicabinet Configuration

See NOTE. If a new AC-powered cabinet is to be added, a separate AC receptacle is provided to support the new cabinet. This AC receptacle must not be shared with any other equipment and must not be controlled by a wall switch. For the convenience and safety of equipment-room personnel, the receptacle should not be located under the cross-connect field.

NOTE:
In contrast to the AC power that is likely to be currently available in a G1 or G3i equipment room, the new AC-powered PPN added for a G3r V4 upgrade uses 4-wire, 30-A, 208-V, AC power. Whereas, each cabinet in a G1 or G3i stack used 3-wire, 15- or 20-A, 115-V power.

If a new DC-powered cabinet is to be added, refer to *DEFINITY Communications System Generic 1 and Generic 3 Installation and Test*, 555-230-104, Issue 5, for DC power and grounding requirements.

116A Isolator

Each G3-MT connected to a DC-powered cabinet, via the asynchronous Electronic Industries Association (EIA) RS-232 interface (behind a PPN control carrier or behind an EPN expansion control carrier), requires a 116A isolator. The isolator is inserted at the RS-232 interface between the G3-MT and the interface connector to isolate grounding between the system and external adjuncts.

Power-Failure Stations

During routine switch operation, the ground for the power-failure stations is derived from the system's auxiliary cable. This ground will be disconnected during the upgrade, thus disabling the power-failure stations. Therefore, a ground strap will have to be run to the power-failure transfer panel. This strap should be connected shortly after power is removed and then disconnected just before power is restored to the upgraded system.

To minimize downtime during the G3r V4 upgrade, power-failure transfer equipment should be tested and, if need be, repaired before the hardware upgrade begins.

Software

The G3r V4 software and translations will be saved on the TN1656 Tape Drive circuit pack. This tape format is not compatible with the format of the G1 or G3i TN774 Tape Drive circuit pack.

The translations in the G1 or G3i system must be copied to a spare tape and sent to Software Technical Support (STS) to be converted and written to a G3r V4 tape. This process takes two weeks. The G3r V4 tapes (including one with translations) must be on-site before the upgrade can begin. For each G1 or G3r V4 processor, two tapes (one system tape and one backup tape) must always be retained on site with the G1 or G3i system.

After a software upgrade, several features require special attention because of form changes or potential naming conflicts in the upgrade process. Most of these changes and conflicts are related either to a software upgrade from standard ACD to Call Vectoring or to changes in the ARS/AAR features to compensate for increasing uncertainty in the North American numbering plan. Also, if ARS is enabled (when upgrading from IR1V4 to GD-91 software), it may be necessary to modify the Call Type field on the ARS Analysis form to “unk” for all call types except “iop” or “int.”

Table 5-1 contains a list of implementation forms that are either new or changed for G3r V4.

After the upgrade, the Software Associate should check these forms to ensure that the upgraded translations are appropriate for the customer’s needs. Refer to *DEFINITY Communications System Generic 3r Transition Reference*, 555-230-636, and *DEFINITY Communications System Generic 3 V4 Implementation*, 555-230-655, for information to make any required changes.

ISDN Gateway

When a system is upgraded from a G1 to a G3, the ISDN Gateway (if installed) must be upgraded to the correct software release. Call progress messages to the ISDN Gateway may be intermittently lost, therefore, this upgrade must occur at the same time as the G1 to G3 upgrade.

Contact your AT&T representative for the correct software release.

Table 5-1. Changed/New Administration Forms for G3r V4 — from G1

From G1	To G3r V4
ARS fnpa	ARS Digit Analysis
ARS hnpa	ARS Digit Analysis
Allowed Call List	Toll Analysis
Code Restriction fnpa	Toll Analysis
Code Restriction hnpa	Toll Analysis
Interexchange Carrier	Interexchange Carrier
Permanent Switched Calls	Administered Connections
RNX Table	AAR Digit Analysis
Ten-Seven Digit Conversion	ARS/AAR Digit Conversion
None (Note)	Alias Station
None	Alphanumeric Dialing
None	Call Vector
None	Signaling Group
None	Access Endpoints
None	Vector Directory Number

NOTE:
"None" represents a new form for G3r V4.

Table 5-2. Changed/New Administration Forms for G3r V4 — from G3i

From G3i	To G3r V4
ARS Digit Analysis	ARS Digit Analysis
Toll Analysis	Toll Analysis
Interexchange Carrier	Interexchange Carrier
Administered Connections	Administered Connections
AAR Digit Analysis	AAR Digit Analysis
ARS/AAR Digit Conversion	ARS/AAR Digit Conversion

Software-Translation Upgrade

The G3r V4 software and translations will be saved on the TN1656 Tape Drive circuit pack. This tape format is not compatible with the format of the G1 or G3i TN774 Tape Drive circuit pack.

During an upgrade from a G1 or G3i to a G3r V4, STS must convert the G1 or G3i translations and write them to a G3r V4 tape. To enable this tape conversion, replace the system tape with a spare G1 or G3i tape. (Spare tape cartridges can be acquired from the QPPCN before the upgrade.) Then, copy the current G1 or G3i translations to the spare tape, and overnight mail this tape to STS. Also, put the original system tape back into the system.

If possible, the customer should put a freeze on any new translations while the spare tape is being converted. If not, be sure that the customer's switch administrator keeps detailed records of any translation changes made during that interval. These records will facilitate the reassignment of any changes on the G3r V4 tapes after the upgrade.

The new G3r V4 tapes (one with the converted translations, two if duplicated and the rest blank) must be on-site before the upgrade begins.

Since a new G3r V4 PPN will be installed during the upgrade, STS tape conversion must change the port-network number of the G1 or G3i PPN that will be converted to a G3r V4 EPN. To minimize the renumbering of port networks during the software upgrade and to minimize the rewiring and relabeling of the wall field during the hardware upgrade, the tape conversion will assign the next port-network number (after the highest-numbered port network in the system) to the G1 or G3i PPN that will become a G3r V4 EPN. For example, if a G1 or G3i system with two port networks (a PPN and an EPN) were upgraded to a G3r V4, the tape-conversion software would assign port network ''1'' to the new PPN and port network ''3'' to the additional EPN derived from the old G1 or G3i PPN.

Save Translations

1. Log in at the Manager I on the G1 or G3i.
2. If the system is duplex, enter **`status system`**, and press (RETURN) to verify that the system is in the ''active/standby'' mode.
3. Enter **`save translation`**. Press (RETURN). This command instructs the system to write all translation information from memory to the tape(s).
4. If the system is equipped with a TN750/B Announcement circuit pack, enter **`display announcements`**, and press (RETURN).

   If administered recorded announcements are listed, enter **`list configuration software-version`**, press (RETURN). Check Page 2 of this form to find out when the announcements were last saved, and ask the customer whether any announcements have changed since then.

If so, the current announcements can be saved using the save announcements command. Enter **`save announcements`**, and press (RETURN).

5. Remove the system tape(s), install the backup tape(s), and wait for the tape(s) to retension.
6. If the system is duplex, enter **`status system`**, and press (RETURN) to verify that the system is in the ''active/standby'' mode.
7. Enter **`save translation`**. Press (RETURN).
8. Enter **`save announcements`** if appropriate. Press (RETURN).

Make Source Tape for Upgrade

A spare G1 or G3i tape must be acquired from the QPPCN before performing the following steps. For each processor, there must always be two tapes on site with the G1 or G3i system. Do not send a system or backup tape to STS.

After performing the previous procedures, copy the G1 or G3i translations to the spare tape that will be used to make the G3r V4 tapes. Perform the following procedures:

1. Remove the backup tape, install the spare tape, and wait for the tape to retension.
2. See NOTE. Enter **`save translation`**. Press (RETURN). This command instructs the system to write all translation information from memory to the tape.

   NOTE:
   The off-site STS translation upgrade does not preserve the content of recorded announcements. Therefore, during the upgrade, any announcements stored on a TN750/B circuit pack must be rerecorded.

3. Remove the source tape.
4. Insert the system tape.

The tape removed in Step 3 should be mailed (with next-day delivery) to STS for use in making the G3r V4 tapes.

System Upgrades

There are many configurations of DEFINITY G1s and G3is in the field. In terms of both hardware and software, each system can have a unique configuration. However, to simplify G3r V4 upgrades, the existing PPN is always upgraded to an EPN, and an existing EPN is always upgraded to an EPN. A new multicarrier cabinet would then always serve as the PPN.

Upgrading a G1 or G3i EPN to a G3r V4 EPN requires changing, and often restructuring, the expansion interface circuit packs. If a G1 or G3i PPN is upgraded to a G3r V4 EPN, hardware changes (including carrier replacement) are required.

This section gives a sequential list of the steps required to upgrade the system.

G1 or G3i to G3r V4

See NOTE. Refer to *DEFINITY Communications System Generic 1 and Generic 3 Installation and Test*, 555-230-104, Issue 5, to install the new PPN cabinet.

NOTE:
During the wall-field wiring of the PPN installation, the wall field can also be relabeled with the new port-network number of the G1 or G3i PPN to be upgraded. (The STS software upgrade assigned the next port-network number, after the highest-numbered port network in the G1 or G3i system, to the upgraded G3r V4 EPN.)

If a second or third EPN is being added, refer to *DEFINITY Communications System Generic 1 and Generic 3 Installation and Test*, 555-230-104, Issue 5, to install the new EPN.

Upgrade Single-Carrier Cabinet Stack

The existing PPN cabinet stack is always upgraded to an EPN. An existing EPN cabinet stack is also always upgraded to an EPN. Upgrade the port networks using the following procedures.

A G1 or G3i PPN is upgraded to a G3r V4 EPN by:

- Removing the control cabinet in position ‘‘A’’
- Removing the duplicate control cabinet in position ‘‘B’’ if required
- Installing the J58890N expansion control cabinet in position ‘‘A’’
- Replacing the duplicate control cabinet with a J58890H-1 port cabinet in position ‘‘B’’ (if desired) or changing the port cabinets’ address plugs

- Adding the G3r V4 circuit packs
- Restructuring the port circuits as required
- Adding G3r V4 circuit packs to the ‘‘B’’ port cabinet for critical reliability if required

Upgrading a G1 or G3i single-carrier cabinet PPN requires, at a minimum, that the control cabinet in the ‘‘A’’ position be replaced. Since the control cabinet is the bottom cabinet in the port network, the PPN will have to be completely dismantled. Properly label every cable to be disconnected so that reconnecting them is easier.

A G1 or G3i EPN (either multicarrier or single-carrer) is upgraded to a G3r V4 EPN by:

- Unduplicated G1 or G3i EPN to a standard-reliability G3r V4 EPN
  - Replacing the TN776 expansion interface circuit pack (in slot 2A01) with the G3r V4 TN570 expansion interface.
- Duplicated G1 or G3i EPN to a high-reliability G3r V4 EPN
  - Removing the TN776 expansion interface circuit packs (from slots 2A01 and 2B01).
  - Installing the G3r V4 TN570 expansion interface circuit packs (in slots 2A01 and 2A02).
  - Restructuring the port circuits as required
- Duplicated G1 or G3i EPN to a critical-reliability G3r V4 EPN
  - Removing the TN776 expansion interface circuit packs (from slots 2A01 and 2B01).
  - Installing the G3r V4 TN570 expansion interface circuit packs (in slots 2A01, 2A02, 2B01, and 2B02).
  - Restructuring the port circuits as required

Prerequisite Hardware

The equipment in the following table *must* be on-site before the upgrade begins. Ensure that the tapes are G3r V4 tapes.

To place a claim for missing equipment, as part of the Streamlined Implementation process, call "1-800-772-5409," and respond to the call prompter.

Table 5-3. Required Hardware

Equipment	Description	Quantity
PEC 6300-07X	Processor Port Network	1
J58890N	Expansion Control Cabinet	1
106647985	TN775B Maintenance	1
103281788	TN570 Expansion Interface	w/o CSS: 2, 4, 6, or 12 (Note 1) w/CSS: 1 or 2 per port network
103281812	TN573 Switched Node Interface	w/CSS: 1 or 2 per port network
63300A	FL2P-P-XX Fiber Cable	1 to 12 (Note 2)
106455348 or 106455363	9823-A Lightwave Transceiver 9823-B Lightwave Transceiver	2 to 12 (Note 3) 2 to 12 (Note 3)
J58890TF	Tape Cartridge	2 or 4 (Note 4)
106689516	TN771D Maintenance Test	1 or 2 (Note 5)
846307817	Lower Rear Cover	1 (Note 6)
846307809	Ground Plate	1 (Note 7)
H600-248 G1	ICC Cables	2 (Note 7)
846408268	Earthquake Front Panel	1 (Note 8)
846408386	Earthquake Ground Plate	1 (Note 8)
846408250	Stiffener	1 (Note 8)
846408243	Earthquake Front Mounting Angle	1 (Note 8)

Notes:

1. Depending on the reliability type and on the number of G3r V4 port networks. Two TN570s are required for a standard- or high-reliability switch with two port networks; six with three port networks. Four are required for a critical-reliability system with two port networks; twelve with three port networks. The factory has installed the necessary TN570s in the new PPN. The rest are shipped loose with the EPN equipment.

2. Depending on the reliability type, on the number of G3r V4 port networks, and on whether the networks are remotely separated. One fiber cable is required for a standard- or high-reliability switch with two collocated port networks; three with three collocated port networks. Two are required for a critical-reliability system with two collocated port networks; six with three collocated port networks. (When the port networks are remotely separated, each value doubles.)
3. Depending on the reliability type and on the number of G3r V4 port networks. Two transceivers are required for a standard- or high-reliability switch with two port networks; six with three port networks. Four are required for a critical-reliability system with two port networks; twelve with three port networks.
4. For each fiber connection, one 9823-type lightwave transceiver is installed in one port network, and a like transceiver in the adjacent port network. 4E transceivers cannot be reused from the upgraded G1 or G3i system. Additional 9823-type transceivers, ordered separately, are also shipped loose with the EPN equipment.
5. Depending on the reliability type of the G3r V4 system. Two tapes are required for a standard-reliability system; four for a high-
6. Depending on the number of EPNs in a critical-reliability G3r V4 system.
7. Required for the ‘‘B’’ port cabinet of a critical-reliability G3r V4 EPN. (May not have been installed during R1V3-to-G1 or -G3i upgrade.)
8. Required for a critical-reliability G3r V4 EPN.
9. Required if earthquake protection is provided.

Required Tools

The following tools and items may be required during the upgrade:

- Flashlight or high-intensity AC drop light
- Power screwdriver (optional)
- 1/4-inch flat-blade screwdriver
- 1/4-inch socket with ratchet (optional)
- Long-nose pliers to straighten backplane pins
- Static-proof or original circuit-pack packaging for transporting circuit packs
- Labels for identifying the port circuit packs and cables attached to the rear of cabinets
- Receptacle for holding screws
- One dozen #8 self-tapping screws
- Repair kit for backplane pins (KS-22876 L2 or equivalent)
- One copy of each of the following manuals:
  - *DEFINITY Communications System Generic 3r V4 Maintenance*, 555-230-105, Issue 4
  - *DEFINITY Communications System Generic 3 V4 Implementation*, 555-230-655

Preventive Maintenance

During the G3r V4 upgrade, follow routine preventive maintenance procedures on the system to be upgraded. For information about the procedures and necessary equipment, refer to the “Preventive Maintenance’’ section in *DEFINITY Communications System Generic 3r V4 Maintenance*, 555-230-105, Issue 4.

Verify System Status

Before proceeding, the system should be examined for alarms, and every problem should be corrected. The system must be alarm-free.

Label Cables

To make reconnecting the cables simpler and more reliable, label every connector cable associated with the system (if not already labeled).

Shut Down DEFINITY AUDIX System

1. See WARNING. If a DEFINITY AUDIX System resides in the system to be upgraded, shut down the AUDIX assembly and allow the disk to completely spin down.

WARNING:
Neglecting to shut down an AUDIX assembly before powering down the system cabinet where it resides can damage the AUDIX disk.

2. See WARNING. To avoid an unexpected AUDIX reboot after an unplanned switch reboot, unseat the AUDIX assembly from its backplane connectors.

WARNING:
Before inserting or removing a circuit pack from a cabinet, put on a wrist strap and attach its plug or clip to the cabinet's frame.

Power Down System

1. See CAUTION. At each PPN cabinet's power supply, set the main circuit breaker to OFF.

CAUTION:
Powering down the PPN will cause important system data, such as BCMS data, records of queued ACD calls, Automatic Wakeup requests, and Do Not Disturb requests to be lost. Refer to the "Software Updates'' section in DEFINITY Communications System Generic 3r V4 Maintenance, 555-230-105, Issue 4, for information about preparing the system for a power down.

2. At each EPN cabinet's power supply, set the main circuit breaker to OFF.

Disconnect Power and Grounding

1. Disconnect the cabinet power cords from the rear of each cabinet.
2. Disconnect the coupled bonding conductor.
3. Disconnect the 6-AWG cabinet ground wire from the ground bar in the cabinet.

NOTE:
A screwdriver is required to loosen and tighten the bolts that secure the ground wire to the ground bar.

Install Power-Failure Transfer Ground Strap

CAUTION:
To avoid contaminating single-point ground, do not connect the ground strap while the system is powered up.

1. Connect a strap's lead either to pin 49 of the connecting block or to pin 49 of the CAP (cable access panel) associated with the power-failure transfer panel.
2. Route the other lead to an approved ground source.
3. Connect the lead to the approved ground source.

Remove Door and Panels and Disconnect Cables

1. Remove the front door from all of the PPN cabinets.
2. Disconnect the previously labeled connector cables attached to PPN.
3. Disconnect the G1 Manager I or G3i G3-MT terminal from the TERM connector.
4. Remove the ground plate(s) from between all of the PPN cabinets.
5. Remove the top and bottom rear covers from all of the PPN cabinets.

Remove Circuit Packs

1. Label each port circuit pack in the control cabinet with its slot number.
2. See WARNING and NOTE. Remove all circuit packs and power units from the control cabinet. Store the circuit packs in the static-proof packaging.

WARNING:
Before inserting or removing a circuit pack from a cabinet, put on a wrist strap and attach its plug or clip to the cabinet's frame.

NOTE:
If a TN756 tone detector/generator is removed from the control cabinet, both a G3r V4 tone-clock (TN768 or TN780) and a new tone detector (TN748B) should later replace this circuit pack. This tone detector will serve to replace the tone detector circuits on the TN756.

Disconnect TDM/LAN Cables and ICC Cables

1. See NOTE. Remove and retain all of the TDM/LAN cables. They will be reused.

   NOTE:
   Before disconnecting each cable, note the position of the cable.

2. See preceding NOTE. If the G1 or G3i system being upgraded is duplicated, remove the ICC cables. They will be replaced with new ICC cables (H600-248 G1).

Remove the Existing Control Cabinet

Since the control cabinet is located at the bottom of the port network, the stack will have to be completely dismantled. At this point in the upgrade, all the power, grounding, TDM, ICC, and connector cables should be disconnected. Before you proceed, ensure that there is adequate space available to place each cabinet in an out-of-the-way location as the stack is dismantled.

1. Remove the cabinet clip between each cabinet or front earthquake plate as provided.
2. Remove rear ground plate.
3. See DANGER. Remove the port cabinets from the stack, and put them in a safe place.

   DANGER:
   A port cabinet may weigh as much as 125 pounds and requires two handlers to unstack the cabinet. If a third or fourth cabinet is to be removed, remove the front door, power supply, and circuit packs from the cabinet to lighten the load. Make sure the two handlers are capable (size and strength) of lifting the cabinet from its position.

4. See preceding DANGER. If the G1 or G3i system being upgraded is duplicated, remove the control cabinet in position ‘‘B.’’ It will not be reused, so it can be removed at this time.
5. If the control cabinet in position ‘‘A’’ is earthquake mounted, remove the hardware securing the cabinet to the floor.
6. Move the existing control cabinet out of its present location. It will not be reused, so it can be removed at this time.

Unpack and Inspect Expansion Control Cabinet for Damage

1. See DANGER. Unpack cabinet.

   DANGER:
   Take care to avoid injury while cutting and removing bands.

2. Visually inspect cabinet for any physical damage caused during shipping. Report any damage for appropriate action per local procedures.

Remove Front Door

Remove the front door of expansion control cabinet.

1. Use a screwdriver, and turn door-latch screw counterclockwise one quarter turn to release door (see Figure 5-2).
2. Lift door from lower slots and remove from cabinet.

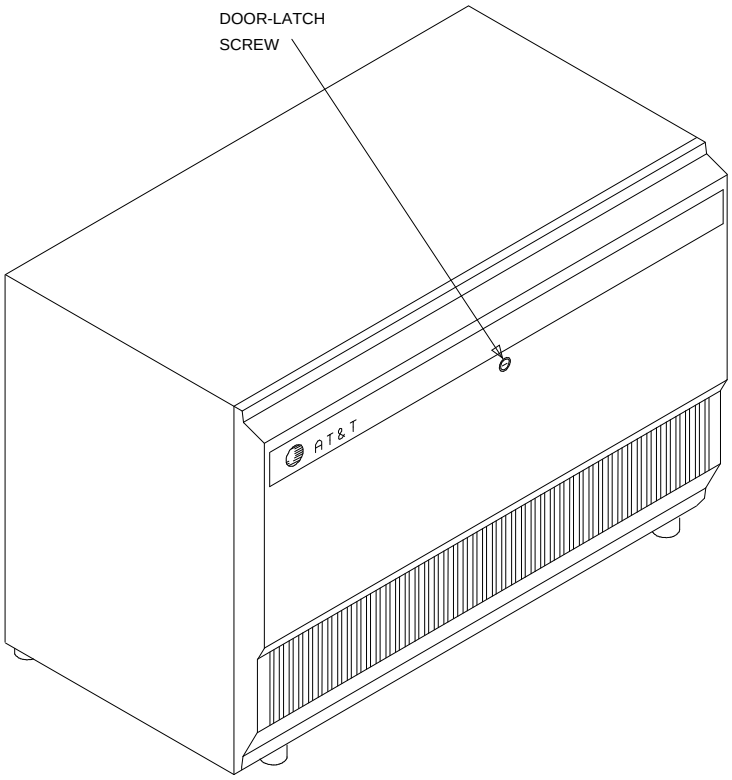

Figure 5-2. Location of Door-Latch Screw for G3r V4 Cabinet

Install Expansion Control Cabinet

1. See DANGER. Position the J58890N-1 expansion control cabinet ‘‘A’’ at the desired location.

   DANGER:
   The cabinet may weigh as much as 130 pounds and requires two handlers. Use caution to avoid injury.

2. If earthquake protection is not required, install hole plugs (provided with cabinet) in the holes previously occupied by the two carriage bolts at the bottom rear of the cabinet.

Add Earthquake Protection

If earthquake protection is required:

1. Place the front mounting angle at the location selected for the front of the expansion control cabinet.
2. Using the angle as a template, mark the locations of the two mounting bolts.
3. Drill two holes 1/2 inch in diameter and 1-1/2 inches deep at the spots marked in Step 2.
4. Mount the front mounting angle to the floor (Figure 5-3).
5. Move the cabinet back into place, and temporarily stabilize the cabinet by attaching the cabinet to the angle with two No. 12-24 by 1/2-inch thread-forming screws.
6. Insert a pencil or marker through the two holes (previously occupied with carriage bolts) in the bottom rear of the cabinet, and mark the floor directly beneath each hole.
7. Remove the two screws installed in Step 5, and move the cabinet out of the way.
8. Drill two holes 1/2 inch in diameter and 1-1/2 inches deep at the spots marked in Step 6.
9. Move the cabinet back into place.
10. Attach the cabinet to the front mounting angle using four No. 12-24 by 1/2-inch thread-forming screws.

11. In the rear of the cabinet, lay the stiffener on the bottom of the cabinet, aligning the stiffener with the holes in the bottom of the cabinet.
12. Fasten the cabinet to the floor (Figure 5-4).

NOTE:
This procedure is only a portion of the complete earthquake protection package. According to the logical installation sequence, instructions for adding the earthquake front plate and earthquake ground plate will be given at the appropriate location in this chapter.

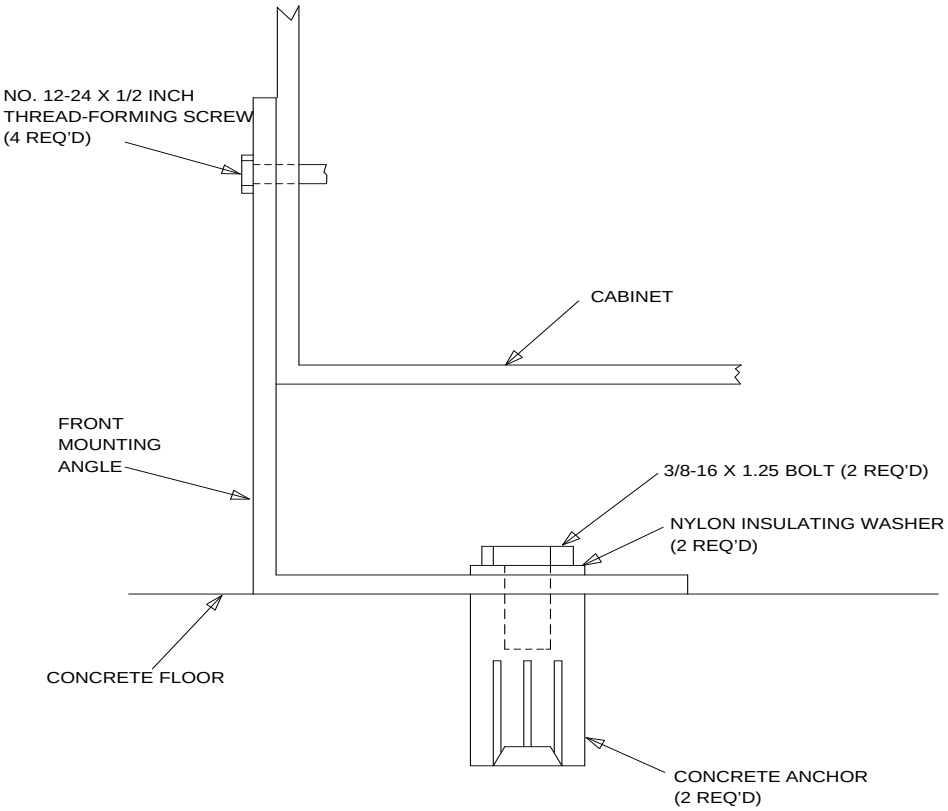

Figure 5-3. Front Mounting Angle — Concrete Floor

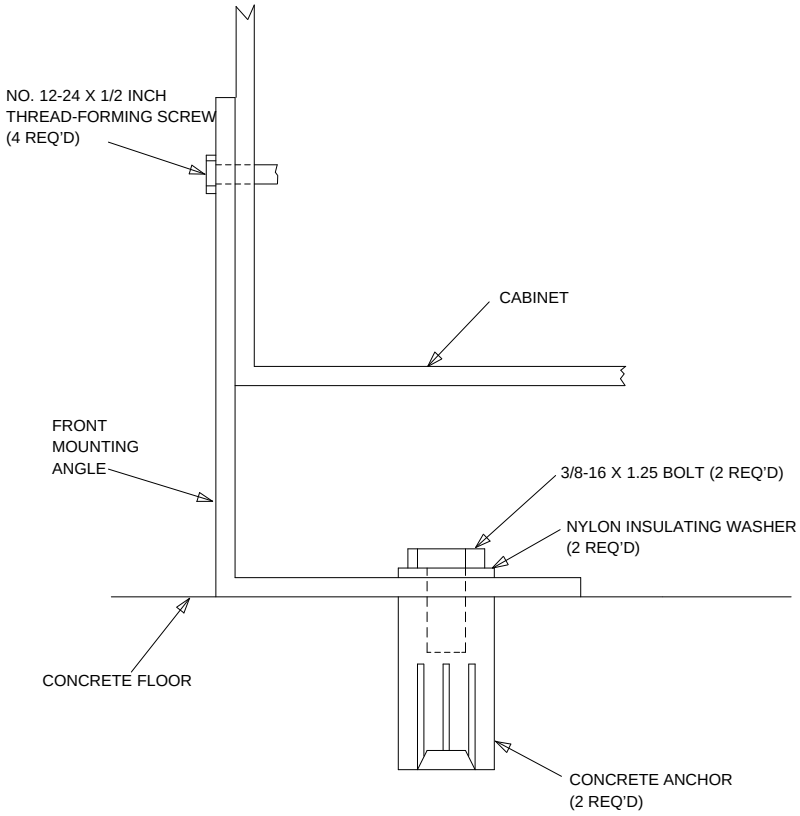

Figure 5-4. Cabinet Earthquake Mounting — Concrete Floor

Install Port Cabinets

See DANGER and NOTE. Place the port cabinets into the positions from which they were previously removed (see Figure 5-5).

DANGER:
The cabinet may weigh as much as 130 pounds and requires two handlers. Use caution to avoid injury.

NOTE:
If a duplicated G1 or G3i PPN is being upgraded to a G3r V4 EPN, the second control cabinet (J58890M) can be replaced by a new J58890H port cabinet in position "B."

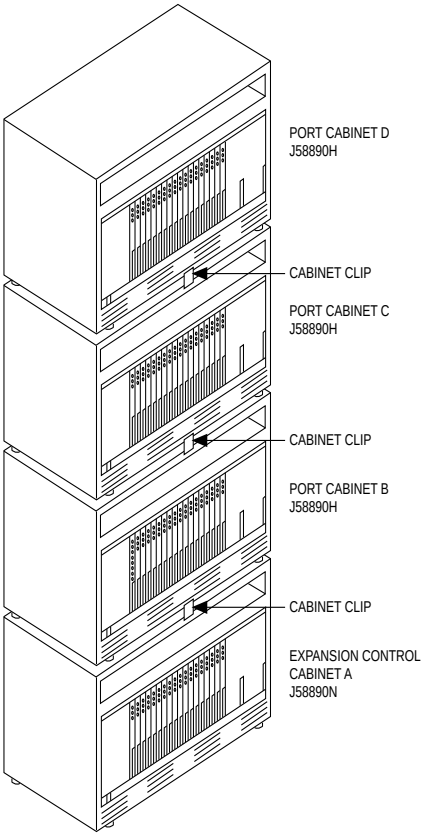

Figure 5-5. 4-Cabinet G3r V4 EPN — Front View, Doors Removed

Install Circuit Packs

1. See WARNINGS. Replace the circuit packs and power supplies in port cabinets "C" and "D" if they were previously removed.

   WARNING:
   Before inserting or removing a circuit pack from a cabinet, put on a wrist strap and attach its plug or clip to the cabinet's frame.

   WARNING:
   These replaced port circuit packs must conform to the usable vintage requirements for a G3r V4 system (see Reference Guide for Circuit-Pack Vintages and Change Notices).

2. See preceding WARNING and following NOTE. Using the following figure, the label, and the annotated "list configuration all" (provided with the G3r V4 tape), install the G3r V4 control circuit packs into the new expansion control cabinet.

   NOTE:
   If a TN756 tone-detector/generator was removed from the G1 or G3i control cabinet, a new G3r V4 tone clock (TN2182) should replace this circuit pack. The TN2182 Tone-Clock serves to replace the tone detector circuits on the old TN756. If a TN2182 is used, no TN748B is required.

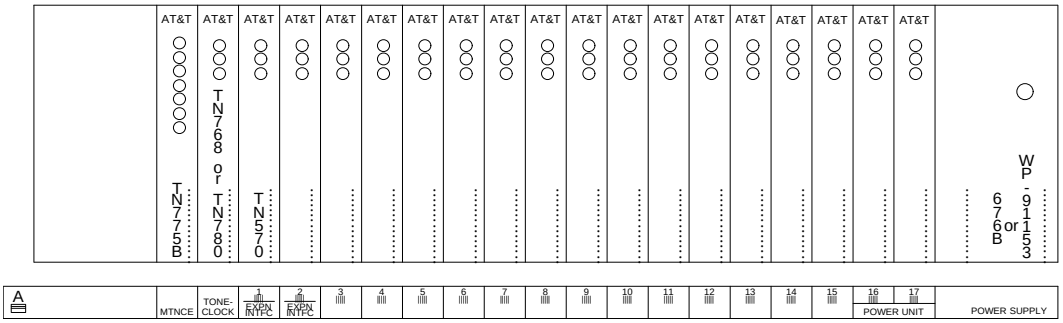

Figure 5-6. Circuit-Pack Locations in G3r V4 Expansion Control Cabinet

3. See preceding WARNINGS and following NOTE. Install the port circuit packs, previously removed, into the ‘‘A’’ cabinet using the decal and the annotated ‘‘list configuration all’’ (provided with the equipment) as a guide.

   NOTE:
   Since the new G3r V4 expansion control carrier has six more port slots than the removed control carrier, there should not be a need to move and retranslate these circuit packs.

4. See preceding WARNINGS and following NOTE. For an EPN in a critical reliability G3r V4 system, install a TN2182 Tone-Clock and a TN570 EI (see Table 5-4) in slots ‘‘1’’ and ‘‘2’’ of port cabinet ‘‘B.’’

Table 5-4. TN570 Requirements

Cabinet	2 Port Networks w/o Critical Reliability	2 Port Networks w/Critical Reliability	3 Port Networks w/o Critical Reliability	3 Port Networks w/Critical Reliability
PPN	1	2	2	4
EPN 1	1	2	2	4
EPN 2	N/A	N/A	2	4

Change Cabinet Address Plugs

If a duplicated control cabinet was removed from position ‘‘B’’ and was not replaced with a new port cabinet, the upgraded EPN’s port cabinets occupy different positions in the cabinet stack. If so, the location of each port cabinet’s address plug must be changed to reflect the cabinet’s current position (see Figure 5-7).

Behind each port cabinet, find the address plug attached to two of the six backplane pins to the right of the pin-field block for slot ‘‘00.’’

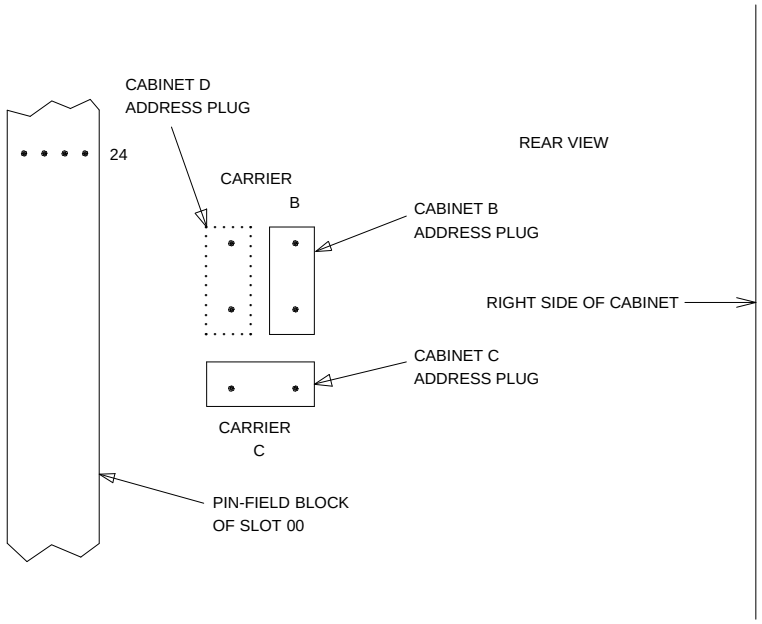

Figure 5-7. Cabinet Address-Plug Location

Install TDM/LAN Bus Terminators

1. If the G1 or G3i PPN being upgraded to a G3r V4 EPN has only one cabinet, verify that the two AHF110 TDM/LAN bus terminators are located per Figure 5-8.
2. If the G1 or G3i PPN has more than one cabinet, perform the following procedures:
   a. Verify that the AHF110 TDM/LAN bus terminator is installed on the right side of the control cabinet looking from the back of the cabinet as shown in Figure 5-9.
   b. Verify that the AHF110 TDM/LAN bus terminator is installed on the top port cabinet (see Figure 5-9).

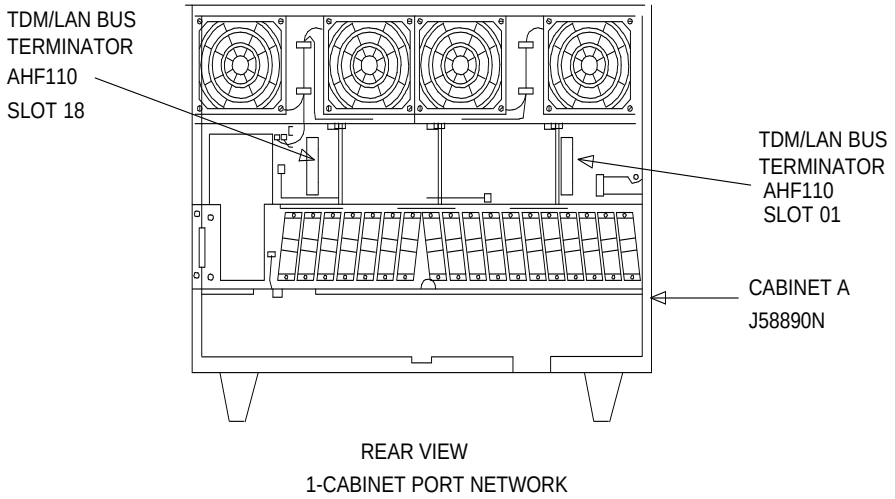

Figure 5-8. Locations of TDM/LAN Bus Terminators for Single-Cabinet EPN

Connect TDM/LAN Cables and ICC Cables

1. Route and connect the TDM/LAN cables (see Figure 5-9). If any of the G1 or G3i port cabinets (being upgraded to G3r V4 cabinets) were originally R1V3 port cabinets, use the following steps to route a cable between an R1V3 upper cabinet and cabinet beneath it. Do not run a new cable through the existing slot in the rear shelf of the upper cabinet.
   a. Loosen two left (as viewed from the rear) connector-panel screws, then remove the other two connector-panel screws.
   b. Attach the TDM/LAN cable to the backplane, and slide the cable between the connector panel and the rear shelf (not through the existing slot in the shelf). Route the cable along the bottom of the cabinet.
   c. Replace and tighten the connector-panel screws.
2. See NOTE. Connect the ICC cables as shown in Table 5-5 and Figure 5-10 and Figure 5-11.

   NOTE:
   Do not use the ICC cables (H600-259 G1) that were removed from the duplicated G1 or G3i PPN. Use the new ICC cables (H600-248 G1).

3. On the ‘‘A’’ carrier, verify the CFY1 current limiter (CURL) is connected to pin-field block ‘‘00’’ (see Figure 5-10). The CURL’s components should be on the left side as viewed from the rear.

Table 5-5. Intercabinet Cable Connections

Connect ICC Cables				
	From		To	
	Carrier	Pin-Field Block	Carrier	Pin-Field Block
EPN	J58890N	ICCA	J58890H	ICCA
		ICCB		ICCB

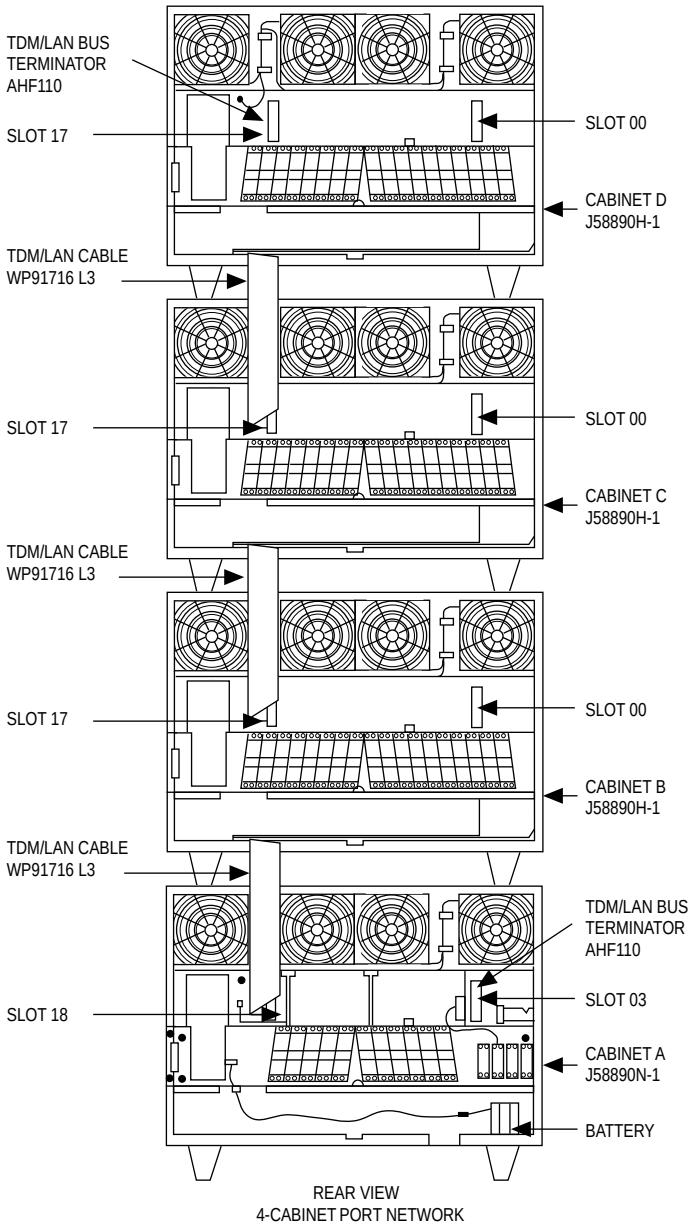

Figure 5-9. TDM/LAN Connections for G3r V4 EPN

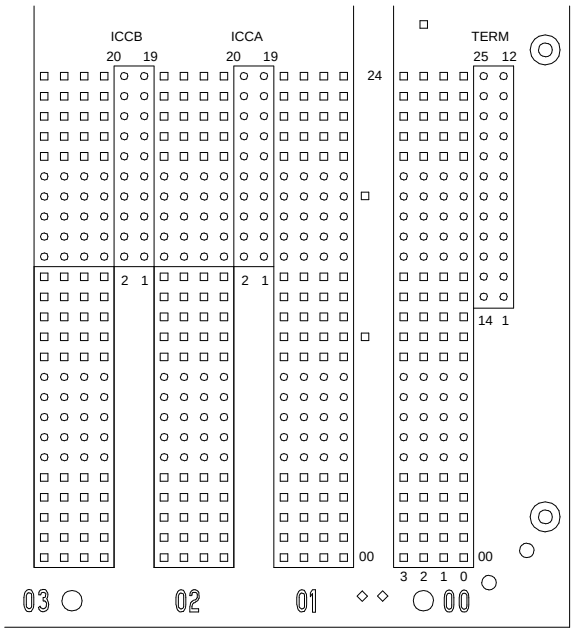

Figure 5-10. ICC Pin-Field Blocks on J58890N Expansion Control Cabinet

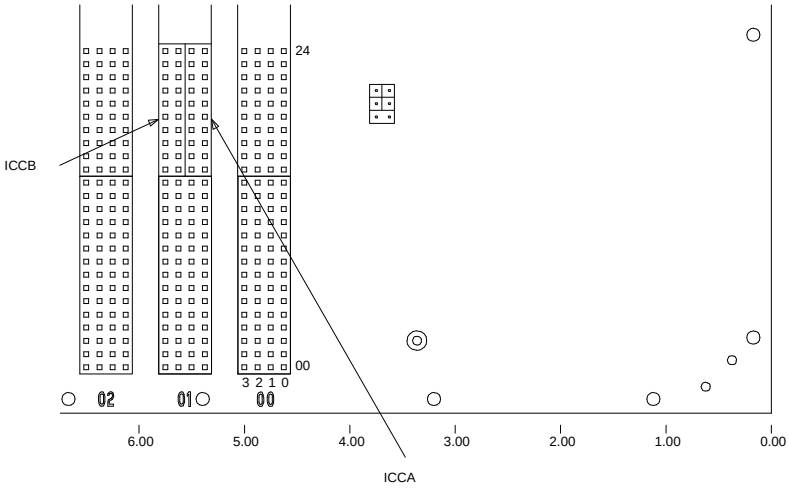

Figure 5-11. ICC Pin-Field Blocks on J58890H Port Cabinet

Interconnect Port Networks — Standard-Reliability G3r V4 System

See NOTES. Fiber-optic cabling terminated to the various lightwave transceivers can interconnect port networks (PNs) to various maximum distances:

- 9823A transceivers can support fiber connections up to 4,900 ft. (about 0.9 miles)
- 9823B transceivers can support fiber connections up to 25,000 ft (about 4.7 miles)

When available and whenever the desired distance between the port networks is less than 25,000 feet, fiber is the preferred medium for interconnecting port networks, providing significantly higher-bandwidth connectivity than DS1C remoting.

NOTE:
As always, these distance limitations are approximate measurements of the *actual* fiber right-of-way (not of the shortest linear distance) between the two endpoints.

NOTE:
It is important to label every cable that you install. For details, refer to the section, *Labels for Fiber-Optic Cables*, in Appendix E of the installation manual.

NOTE:
Throughout these procedures, remember to keep track of which fiber is attached to which connector on each lightwave transceiver. This section provides figures offering the suggested way of making these connections.

The connectors on the lightwave transceivers are labeled either “TX” (transmit) or “RX” (receive), while the fibers attached to each connector are numbered either ‘‘1’’ or “2.’’ A viable fiber connection is only made when both fibers in each cable (that is, ‘‘1’’ and ‘‘2’’) route from the “TX” connector of a port network to the “RX” connector of its adjacent port network. For an example, refer to Figure 5-13.

NOTE:
For implementation details, refer to the ‘‘Fiber Link Administration’’ sections of *DEFINITY Communications System Generic 3 V4 Implementation*, 555-230-655.

Collocated Port Networks

For a standard-reliability system with one collocated expansion port network, one fiber-optic cable (FL2P-P-XX) and two lightwave transceivers (9823-type) are required to directly connect the networks.

For a standard-reliability system with two collocated expansion port networks, three fiber-optic cables (FL2P-P-XX) and six lightwave transceivers (9823-type) are required to directly connect the networks.

NOTE:
For the FL2P-P-XX fiber-optic cable, the -XX suffix represents the length of the cable in feet. Based on floor-plan considerations, the length of these cables may vary. However, 20-foot cables are normally adequate for a G3r V4 with two port networks.

See NOTE. For collocated cabinets, the fiber-optic cables should be routed directly from the PPN to each EPN cabinet. Since, for this upgrade, a ''DEFINITY style'' PPN cabinet is collocated with a single-carrier cabinet stack, the preferred routing is to run the cables *down* the cable tray and out the bottom of the PPN cabinet. The cables are then run to the EPN cabinet and up the outside of the rear panels to the desired carrier level.

If, for this upgrade, a ''DEFINITY style'' PPN cabinet is also collocated with another ''DEFINITY style'' multicarrier EPN cabinet, the preferred routing is to run the cables *up* the cable tray and out the top of the PPN cabinet. The cables are then run to the other cabinet, through the top of the cabinet, and down the cable tray to the desired carrier level.

NOTE:
Refer to Appendix E of *DEFINITY Communications System Generic 1 and Generic 3 Installation and Test*, 555-230-104, Issue 5, for additional guidelines about fiber routing.

Fiber-Remoted Port Networks

For a standard-reliability system with one fiber-remoted expansion port network, two fiber-optic cables (FL2P-P-XX), two lightwave transceivers (9823-type), and two lightwave-interface units (provided by the PSC) are required.

For a standard-reliability system with two fiber-remoted expansion port networks, six fiber-optic cables (FL2P-P-XX), six lightwave transceivers (9823-type), and six lightwave-interface units (provided by the PSC) are required.

DS1C-Remoted Port Networks

For a standard-reliability system with one DS1C-remoted expansion port network, two DS1C circuit packs (TN574), two DS1C-to-EI cables (846448637 and/or 846448645), two H-600-348 cables, from one to four pairs of channel service units (CSUs), and from one to four pairs of wall-field cables (provided with the CSUs) are required.

For a standard-reliability system with two DS1C-remoted expansion port networks, this arrangement requires:

- Six DS1C circuit packs (TN574)
- Six DS1C-to-EI cables (846448637 and/or 846448645)
- Six H-600-348 cables
- Three, six, nine, or twelve pairs of channel service units (CSUs)
- Three, six, nine, or twelve pairs of wall-field cables (provided with the CSUs)

For One or Two Collocated Expansion Port Networks

1. Behind port carrier B of the multicarrier PPN (see Figure 5-12, Figure 5-13, Figure 5-14, and Figure 5-15):
    - Install a 9823-type lightwave transceiver on the connector at slot 1B02.
    - Connect one end of the fiber-optic cable to the lightwave transceiver at slot 1B02.
    - Route the fiber-optic cable from the 9823-type lightwave transceiver to the cabinet's cable tray and downward out of the cabinet to the EPN stack.
    - Delicately attach the fiber-optic cable (with cable ties) to the wall of the cable tray at the built-in cable-tie positions.
2. Behind control cabinet A of EPN stack 2:
    - Install the same kind (either 9823-A or 9823-B) of lightwave transceiver on the connector at slot 2A01.
    - Connect the other end of the fiber-optic cable coming from the PPN to the lightwave transceiver at slot 2A01.
    - Delicately attach the fiber-optic cable (with cable ties) to the rear covers of the EPN stack.
    - Coil up the surplus length of fiber-optic cable, and place the coil either in the cable manager or on the bottom shelf (holding the power supply) of the PPN cabinet.

For Two Collocated Expansion Port Networks

1. Behind port carrier C of the multicarrier PPN:
   - Install a 9823-type lightwave transceiver on the connector at slot 1C02.
   - Connect one end of the fiber-optic cable to the lightwave transceiver at slot 1C02.
   - Route the fiber-optic cable from the 9823-type lightwave transceiver to the cabinet's cable tray and downward out of the cabinet to the EPN stack.
   - Delicately attach the fiber-optic cable (with cable ties) to the wall of the cable tray at the built-in cable-tie positions.
2. Behind control cabinet A of EPN stack 3:
   - Install the same kind (either 9823-A or 9823-B) of lightwave transceiver on the connector at slot 3A01.
   - Connect the other end of the fiber-optic cable coming from the PPN to the lightwave transceiver at slot 3A01.
   - Delicately attach the fiber-optic cable (with cable ties) to the rear covers of the EPN stack.
   - Coil up the surplus length of fiber-optic cable, and place the coil either in the cable manager or on the bottom shelf (holding the power supply) of the PPN cabinet.
3. Behind control cabinet A of EPN stack 2:
   - Install a 9823-type lightwave transceiver on the connector at slot 2A02.
   - Connect one end of the fiber-optic cable to the lightwave transceiver at slot 2A02.
   - Route the fiber-optic cable from the lightwave transceiver down the outside of the rear covers to the other EPN stack.
   - Delicately attach the fiber-optic cable (with cable ties) to the rear covers of the EPN stack.
4. Behind control cabinet A of EPN stack 3:
   - Install the same kind (either 9823-A or 9823-B) of lightwave transceiver on the connector at slot 3A02.
   - Connect the other end of the fiber-optic cable coming from the other EPN to the lightwave transceiver at slot 3A02.
   - Delicately attach the fiber-optic cable (with cable ties) to the wall of the cable tray at the built-in cable-tie positions.
   - Coil up the surplus length of fiber-optic cable, and delicately attach the coil (with a cable tie) to a leg of an EPN cable clamp.

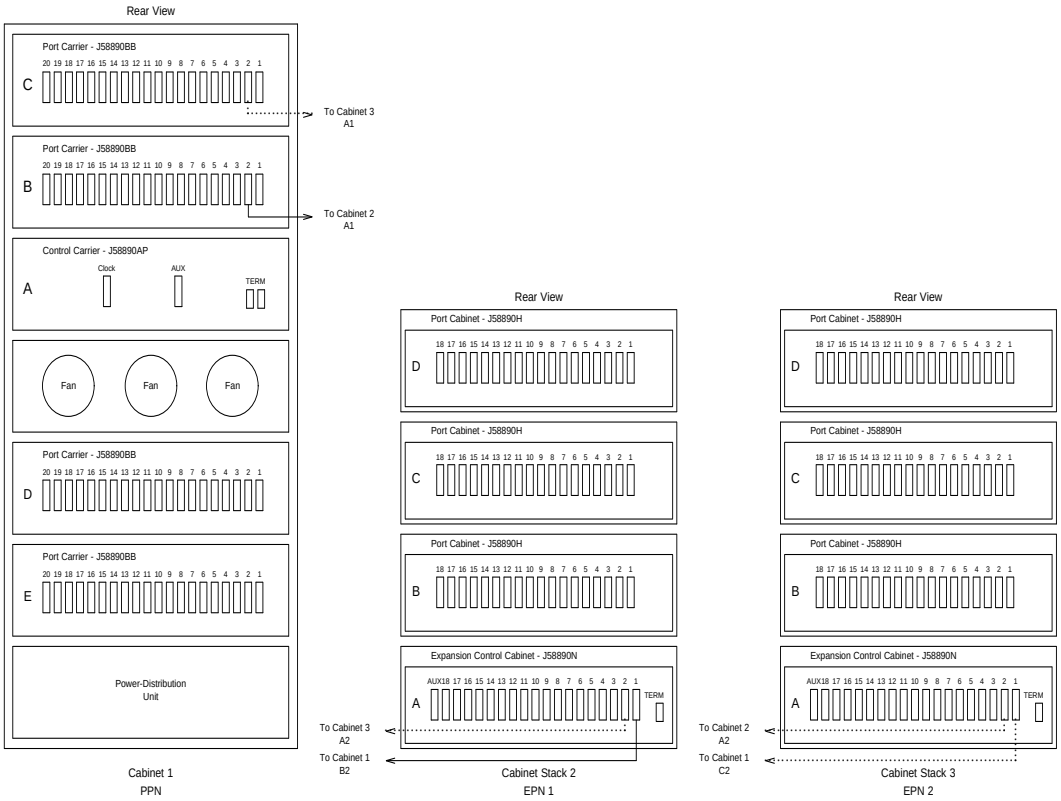

Figure 5-12. Standard-Reliability G3r V4 with Two or Three Port Networks

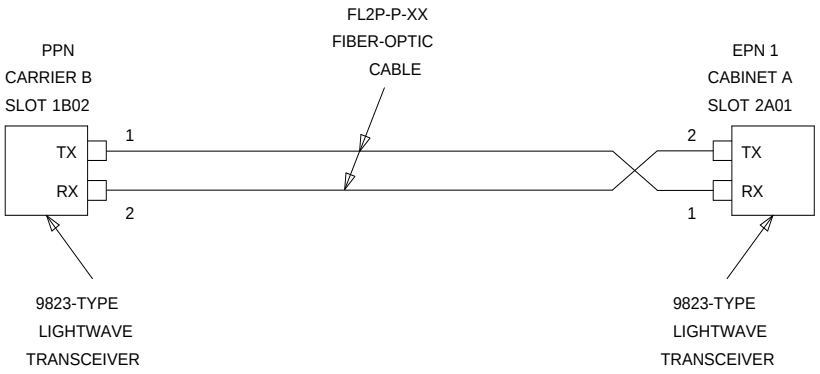

Figure 5-13. Fiber-Optic Connections PPN to EPN1

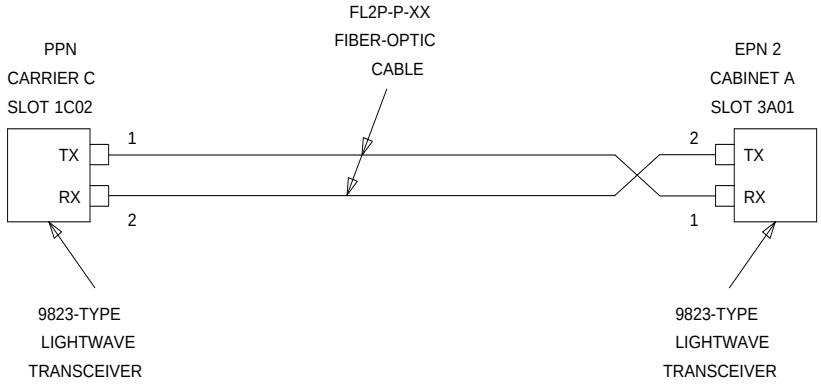

Figure 5-14. Fiber-Optic Connections PPN to EPN2

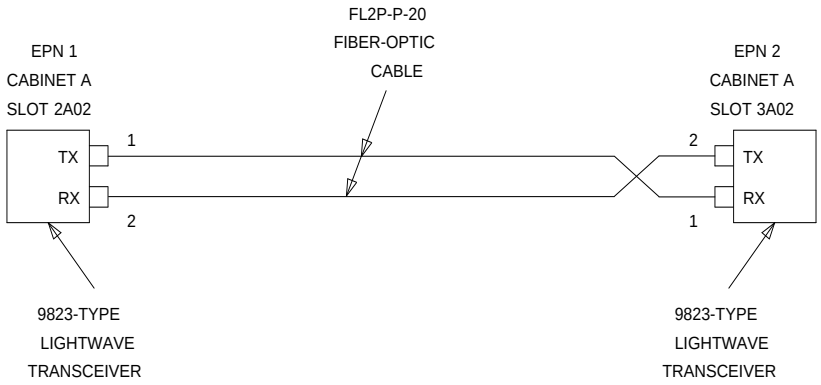

Figure 5-15. Fiber-Optic Connections EPN1 to EPN2

For One or Two Fiber-Remoted Expansion Port Networks

1. Behind port carrier B of the multicarrier PPN (Figure 5-16, Figure 5-17, Figure 5-18, and Figure 5-19):
   - Install a 9823-type lightwave transceiver on the connector at slot 1B02.
   - Connect one end of the fiber-optic cable to the lightwave transceiver at slot 1B02.
   - Route the fiber-optic cable from the lightwave transceiver to the cabinet cable tray and out of the cabinet through the cable manager to the PDS cross-connect facility.
   - At the PDS cross-connect facility, connect the fiber-optic cable to the lightwave-interface unit provided.
   - Delicately attach the fiber-optic cable (with cable ties) to the wall of the cable tray at the built-in cable-tie positions.
2. Behind control cabinet A of EPN stack 2:
   - Install the same kind (either 9823-A or 9823-B) of lightwave transceiver on the connector at slot 2A01.
   - Connect the fiber-optic cable to the lightwave transceiver at slot 2A01.
   - Route the fiber-optic cable from the lightwave transceiver down the outside of the rear covers and through the cable manager to the PDS cross-connect facility.
   - At the PDS cross-connect facility, connect the fiber-optic cable to the lightwave-interface unit provided.
   - Delicately attach the fiber-optic cable (with cable ties) to the rear covers of the EPN stack.
   - Coil up the surplus length of fiber-optic cable, and place the coil in the cable manager.

For Two Fiber-Remoted Expansion Port Networks

1. Behind port carrier C of the multicarrier PPN:
   - Install a 9823-type lightwave transceiver on the connector at slot 1C02.
   - Connect one end of the fiber-optic cable to the lightwave transceiver at slot 1C02.
   - Route the fiber-optic cable from the lightwave transceiver to the cabinet cable tray and out of the cabinet through the cable manager to the PDS cross-connect facility.
   - At the PDS cross-connect facility, connect the fiber-optic cable to the lightwave-interface unit provided.
   - Delicately attach the fiber-optic cable (with cable ties) to the wall of the cable tray at the built-in cable-tie positions.
2. Behind control cabinet A of EPN stack 3:
   - Install the same kind (either 9823-A or 9823-B) of lightwave transceiver on the connector at slot 3A01.
   - Connect the fiber-optic cable to the lightwave transceiver at slot 3A01.
   - Route the fiber-optic cable from the lightwave transceiver down the outside of the rear covers and through the cable manager to the PDS cross-connect facility.
   - At the PDS cross-connect facility, connect the fiber-optic cable to the lightwave-interface unit provided.
   - Delicately attach the fiber-optic cable (with cable ties) to the rear covers of the EPN stack.
   - Coil up the surplus length of fiber-optic cable, and place the coil in the cable manager.
3. Behind control carrier A of EPN stack 2:
   - Install a 9823-type lightwave transceiver on the connector at slot 2A02.
   - Connect one end of the fiber-optic cable to the lightwave transceiver at slot 2A02.
   - Route the fiber-optic cable from the lightwave transceiver down the outside of the rear covers and through the cable manager to the PDS cross-connect facility.
   - At the PDS cross-connect facility, connect the fiber-optic cable to the lightwave-interface unit provided.
   - Delicately attach the fiber-optic cable (with cable ties) to the rear covers of the EPN stack.

4. Behind control cabinet A of EPN stack 3:
   - Install the same kind (either 9823-A or 9823-B) of lightwave transceiver on the connector at slot 3A02.
   - Connect the fiber-optic cable to the lightwave transceiver at slot 3A02.
   - Route the fiber-optic cable from the lightwave transceiver down the outside of the rear covers and through the cable manager to the PDS cross-connect facility.
   - At the PDS cross-connect facility, connect the fiber-optic cable to the lightwave-interface unit provided.
   - Delicately attach the fiber-optic cable (with cable ties) to the rear covers of the EPN stack.
   - Coil up the surplus length of fiber-optic cable, and place the coil in the cable manager.

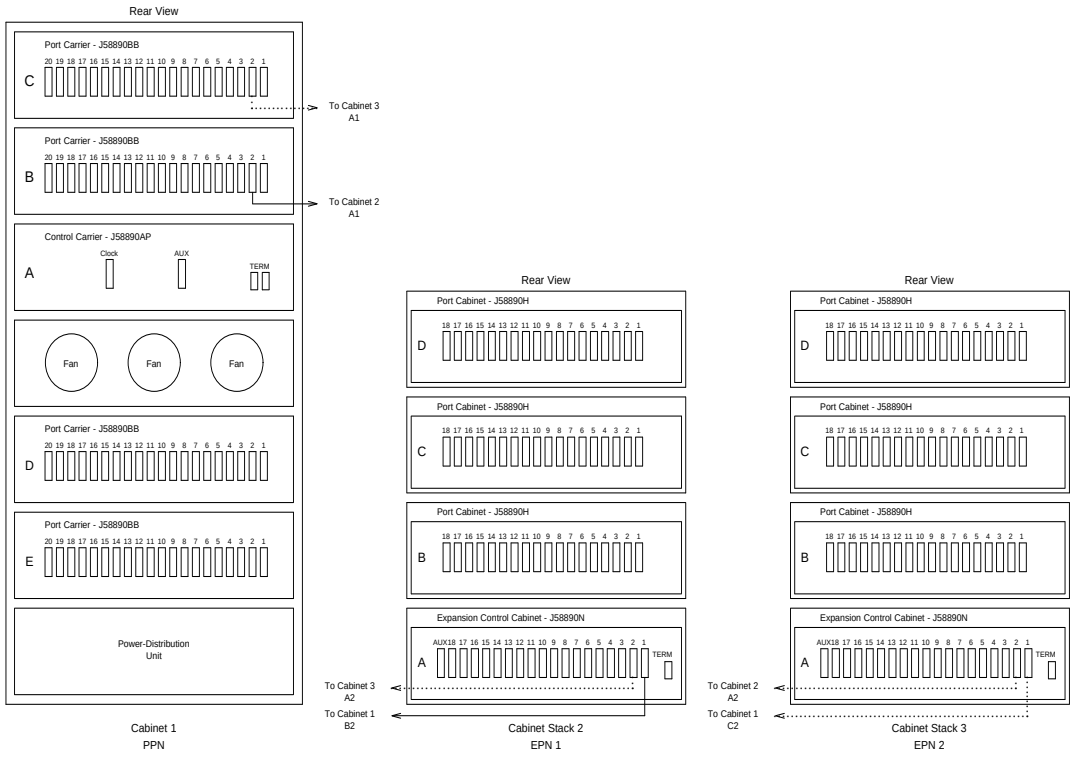

Figure 5-16. Standard-Reliability G3r V4 with Two or Three Port Networks

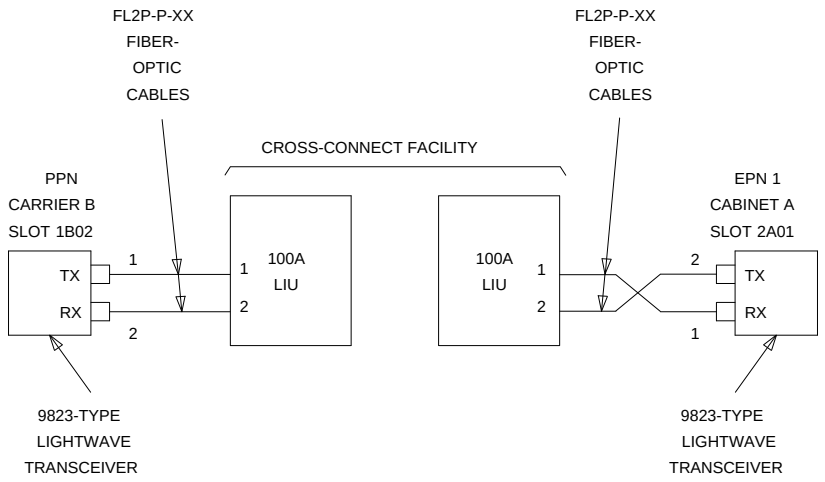

Figure 5-17. Fiber-Optic Connections PPN to EPN1

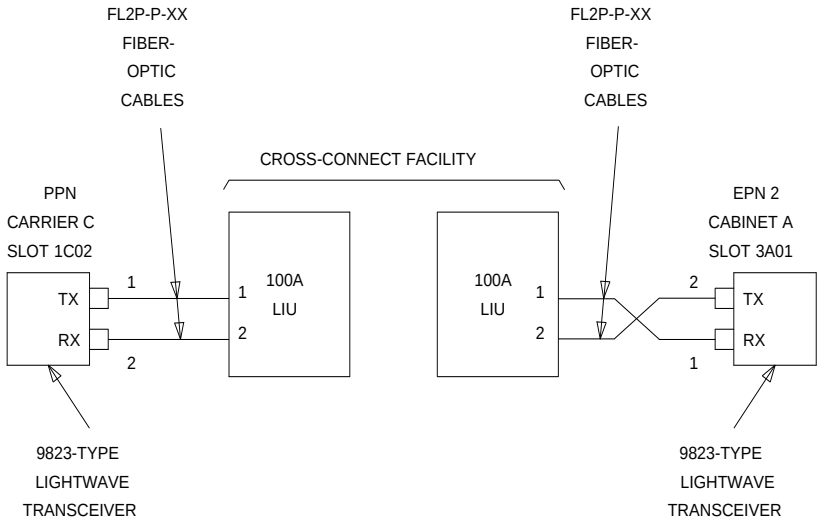

Figure 5-18. Fiber-Optic Connections PPN to EPN2

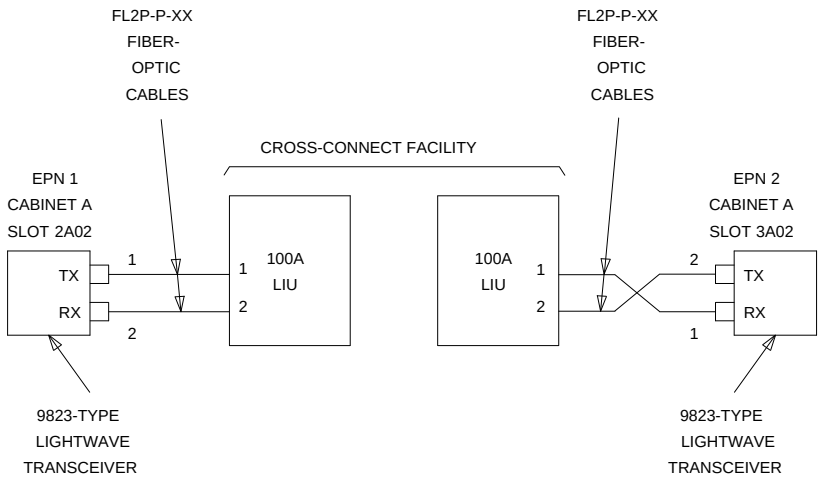

Figure 5-19. Fiber-Optic Connections EPN1 to EPN2

Interconnect Port Networks — High-Reliability G3r V4 System

See NOTES. Fiber-optic cabling terminated to the various lightwave transceivers can interconnect port networks (PNs) to various maximum distances:

- 9823A transceivers can support fiber connections up to 4,900 ft. (about 0.9 miles)
- 9823B transceivers can support fiber connections up to 25,000 ft (about 4.7 miles)

When available and whenever the desired distance between the port networks is less than 25,000 feet, fiber is the preferred medium for interconnecting port networks, providing significantly higher-bandwidth connectivity than DS1C remoting.

NOTE:
As always, these distance limitations are approximate measurements of the *actual* fiber right-of-way (not of the shortest linear distance) between the two endpoints.

NOTE:
It is important to label every cable that you install. For details, refer to the section, *Labels for Fiber-Optic Cables*, in Appendix E of the installation manual.

NOTE:
Throughout these procedures, remember to keep track of which fiber is attached to which connector on each lightwave transceiver. This section provides figures offering the suggested way of making these connections. The connectors on the lightwave transceivers are labeled either “TX” (transmit) or “RX” (receive), while the fibers attached to each connector are numbered either ‘‘1’’ or ‘‘2.’’ A viable fiber connection is only made when both fibers in each cable (that is, ‘‘1’’ and ‘‘2’’) route from the “TX” connector of a port network to the “RX” connector of its adjacent port network. For an example, refer to Figure 5-21.

NOTE:
For implementation details, refer to the ‘‘Fiber Link Administration’’ sections of *DEFINITY Communications System Generic 3 V4 Implementation*, 555-230-655.

Collocated Port Networks

For a high-reliability system with one collocated expansion port network, one fiber-optic cable (FL2P-P-XX) and two lightwave transceivers (9823-type) are required to directly connect the networks.

For a high-reliability system with two collocated expansion port networks, three fiber-optic cables (FL2P-P-XX) and six lightwave transceivers (9823-type) are required to directly connect the networks.

NOTE:
For the FL2P-P-XX fiber-optic cable, the -XX suffix represents the length of the cable in feet. Based on floor-plan considerations, the length of these cables may vary. However, 20-foot cables are normally adequate for a G3r V4 with two port networks.

See NOTE. For collocated cabinets, the fiber-optic cables should be routed directly from the PPN to each EPN cabinet. Since, for this upgrade, a ''DEFINITY style'' PPN cabinet is collocated with a single-carrier cabinet stack, the preferred routing is to run the cables *down* the cable tray and out the bottom of the PPN cabinet. The cables are then run to the EPN cabinet and up the outside of the rear panels to the desired carrier level.

If, for this upgrade, a ''DEFINITY style'' PPN cabinet is also collocated with another ''DEFINITY style'' multicarrier EPN cabinet, the preferred routing is to run the cables *up* the cable tray and out the top of the PPN cabinet. The cables are then run to the other cabinet, through the top of the cabinet, and down the cable tray to the desired carrier level.

NOTE:
Refer to Appendix E of *DEFINITY Communications System Generic 1 and Generic 3 Installation and Test*, 555-230-104, Issue 5, for additional guidelines about fiber routing.

Fiber-Remoted Port Networks

For a high-reliability system with one fiber-remoted expansion port network, two fiber-optic cables (FL2P-P-XX), two lightwave transceivers (9823-type), and two lightwave-interface units (provided by the PSC) are required.

For a high-reliability system with two fiber-remoted expansion port networks, six fiber-optic cables (FL2P-P-XX), six lightwave transceivers (9823-type), and six lightwave-interface units (provided by the PSC) are required.

DS1C-Remoted Port Networks

For a high-reliability system with one DS1C-remoted expansion port network, two DS1C circuit packs (TN574), two DS1C-to-EI cables (846448637 and/or 846448645), two H-600-348 cables, from one to four pairs of channel service units (CSUs), and from one to four pairs of wall-field cables (provided with the CSUs) are required.

For a high-reliability system with two DS1C-remoted expansion port networks, this arrangement requires:

- Six DS1C circuit packs (TN574)
- Six DS1C-to-EI cables (846448637 and/or 846448645)
- Six H-600-348 cables
- Three, six, nine, or twelve pairs of channel service units (CSUs)
- Three, six, nine, or twelve pairs of wall-field cables (provided with the CSUs)

For One or Two Collocated Expansion Port Networks

1. Behind port carrier C of the multicarrier PPN (see Figure 5-20, Figure 5-21, Figure 5-22, and Figure 5-23):
    - Install a 9823-type lightwave transceiver on the connector at slot 1C02.
    - Connect one end of the fiber-optic cable to the lightwave transceiver at slot 1C02.
    - Route the fiber-optic cable from the 9823-type lightwave transceiver to the cabinet's cable tray and downward out of the cabinet to the EPN stack.
    - Delicately attach the fiber-optic cable (with cable ties) to the wall of the cable tray at the built-in cable-tie positions.
2. Behind control cabinet A EPN stack 2:
    - Install the same kind (either 9823-A or 9823-B) of lightwave transceiver on the connector at slot 2A01.
    - Connect the other end of the fiber-optic cable coming from the PPN to the lightwave transceiver at slot 2A01.
    - Delicately attach the fiber-optic cable (with cable ties) to the rear covers of the EPN stack.
    - Coil up the surplus length of fiber-optic cable, and place the coil either in the cable manager or on the bottom shelf (holding the power supply) of the PPN cabinet.

For Two Collocated Expansion Port Networks

1. Behind port carrier D of the multicarrier PPN:
   - Install a 9823-type lightwave transceiver on the connector at slot 1D02.
   - Connect one end of the fiber-optic cable to the lightwave transceiver at slot 1D02.
   - Route the fiber-optic cable from the 9823-type lightwave transceiver to the cabinet's cable tray and downward out of the cabinet to the EPN stack.
   - Delicately attach the fiber-optic cable (with cable ties) to the wall of the cable tray at the built-in cable-tie positions.
2. Behind control cabinet A of EPN stack 3:
   - Install the same kind (either 9823-A or 9823-B) of lightwave transceiver on the connector at slot 3A01.
   - Connect the other end of the fiber-optic cable coming from the PPN to the lightwave transceiver at slot 3A01.
   - Delicately attach the fiber-optic cable (with cable ties) to the rear covers of the EPN stack.
   - Coil up the surplus length of fiber-optic cable, and place the coil either in the cable manager or on the bottom shelf (holding the power supply) of the PPN cabinet.
3. Behind control cabinet A of EPN stack 2:
   - Install a 9823-type lightwave transceiver on the connector at slot 2A02.
   - Connect one end of the fiber-optic cable to the lightwave transceiver at slot 2A02.
   - Route the fiber-optic cable from the lightwave transceiver down the outside of the rear covers to the other EPN stack.
   - Delicately attach the fiber-optic cable (with cable ties) to the rear covers of the EPN stack.
4. Behind control cabinet A of EPN stack 3:
   - Install the same kind (either 9823-A or 9823-B) of lightwave transceiver on the connector at slot 3A02.
   - Connect the other end of the fiber-optic cable coming from the PPN to the lightwave transceiver at slot 3A02.
   - Delicately attach the fiber-optic cable (with cable ties) to the rear covers of the EPN stack.
   - Coil up the surplus length of fiber-optic cable, and delicately attach the coil (with a cable tie) to a leg of an EPN cable clamp.

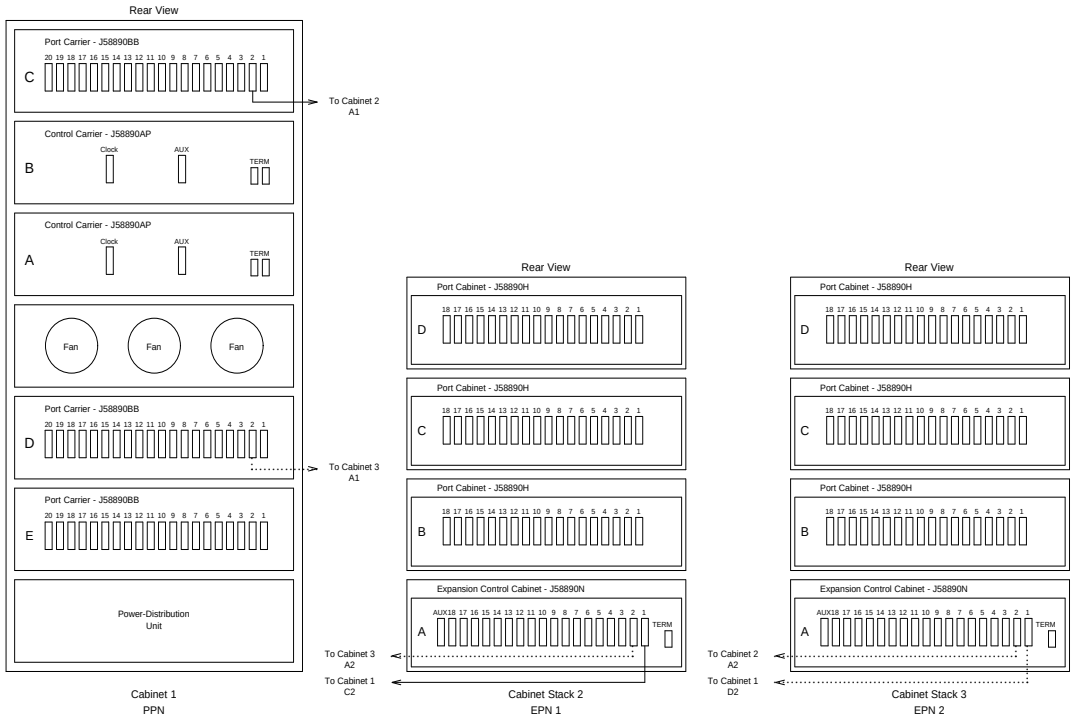

Figure 5-20. High-Reliability G3r V4 with Two or Three Port Networks

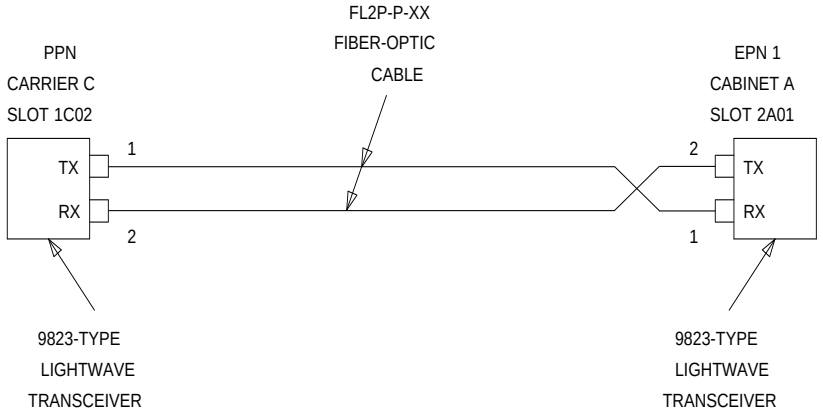

Figure 5-21. Fiber-Optic Connections PPN to EPN1

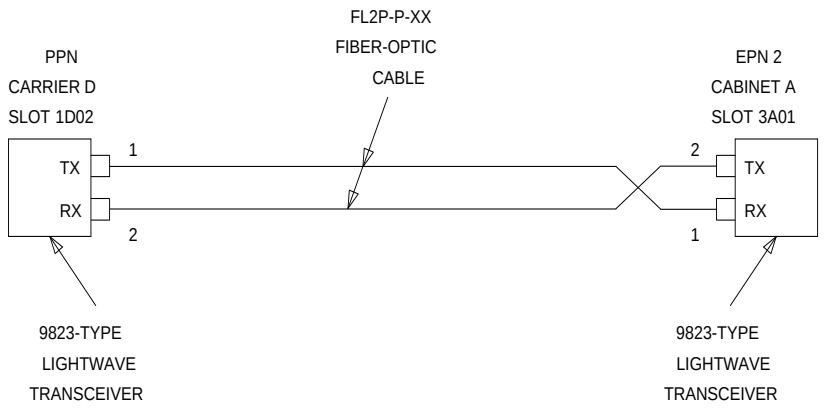

Figure 5-22. Fiber-Optic Connections PPN to EPN2

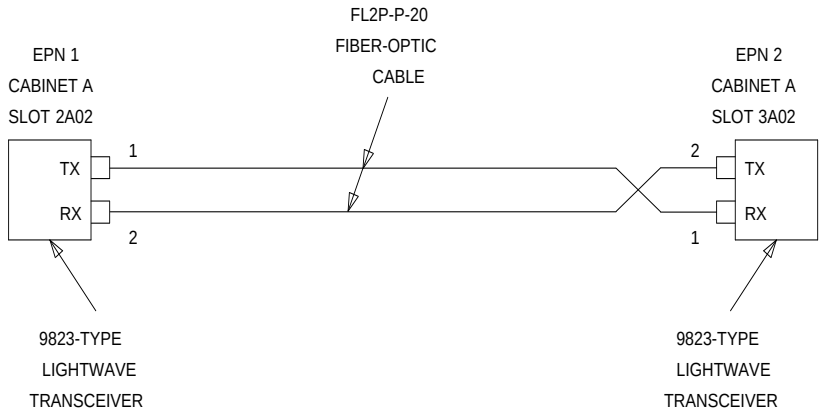

Figure 5-23. Fiber-Optic Connections EPN1 to EPN2

For One or Two Fiber-Remoted Expansion Port Networks

1. Behind port carrier C of the multicarrier PPN (Figure 5-24, Figure 5-25, Figure 5-26, and Figure 5-27):
   - Install a 9823-type lightwave transceiver on the connector at slot 1C02.
   - Connect one end of the fiber-optic cable to the lightwave transceiver at slot 1C02.
   - Route the fiber-optic cable from the lightwave transceiver to the cabinet cable tray and out of the cabinet through the cable manager to the PDS cross-connect facility.
   - At the PDS cross-connect facility, connect the fiber-optic cable to the lightwave-interface unit provided.
   - Delicately attach the fiber-optic cable (with cable ties) to the wall of the cable tray at the built-in cable-tie positions.
2. Behind control cabinet A of EPN stack 2:
   - Install the same kind (either 9823-A or 9823-B) of lightwave transceiver on the connector at slot 2A01.
   - Connect the fiber-optic cable to the lightwave transceiver at slot 2A01.
   - Route the fiber-optic cable from the lightwave transceiver down the outside of the rear covers and through the cable manager to the PDS cross-connect facility.
   - At the PDS cross-connect facility, connect the fiber-optic cable to the lightwave-interface unit provided.
   - Delicately attach the fiber-optic cable (with cable ties) to the rear covers of the EPN stack.
   - Coil up the surplus length of fiber-optic cable, and place the coil in the cable manager.

For Two Fiber-Remoted Expansion Port Networks

1. Behind port carrier D of the multicarrier PPN:
   - Install a 9823-type lightwave transceiver on the connector at slot 1D02.
   - Connect one end of the fiber-optic cable to the lightwave transceiver at slot 1D02.
   - Route the fiber-optic cable from the lightwave transceiver to the cabinet cable tray and out of the cabinet through the cable manager to the PDS cross-connect facility.
   - At the PDS cross-connect facility, connect the fiber-optic cable to the lightwave-interface unit provided.
   - Delicately attach the fiber-optic cable (with cable ties) to the wall of the cable tray at the built-in cable-tie positions.
2. Behind control cabinet A of EPN stack 3:
   - Install the same kind (either 9823-A or 9823-B) of lightwave transceiver on the connector at slot 3A01.
   - Connect the fiber-optic cable to the lightwave transceiver at slot 3A01.
   - Route the fiber-optic cable from the lightwave transceiver down the outside of the rear covers and through the cable manager to the PDS cross-connect facility.
   - At the PDS cross-connect facility, connect the fiber-optic cable to the lightwave-interface unit provided.
   - Delicately attach the fiber-optic cable (with cable ties) to the rear covers of the EPN stack.
   - Coil up the surplus length of fiber-optic cable, and place the coil in the cable manager.
3. Behind port cabinet A of the EPN stack 2:
   - Install a 9823-type lightwave transceiver on the connector at slot 2A02.
   - Connect one end of the fiber-optic cable to the lightwave transceiver at slot 2A02.
   - Route the fiber-optic cable from the lightwave transceiver down the outside of the rear covers and through the cable manager to the PDS cross-connect facility.
   - At the PDS cross-connect facility, connect the fiber-optic cable to the lightwave-interface unit provided.
   - Delicately attach the fiber-optic cable (with cable ties) to the rear covers of the EPN stack.

4. Behind control cabinet A of EPN stack 3:
   - Install the same kind (either 9823-A or 9823-B) of lightwave transceiver on the connector at slot 3A02.
   - Connect the fiber-optic cable to the lightwave transceiver at slot 3A02.
   - Route the fiber-optic cable from the lightwave transceiver down the outside of the rear covers and through the cable manager to the PDS cross-connect facility.
   - At the PDS cross-connect facility, connect the fiber-optic cable to the lightwave-interface unit provided.
   - Delicately attach the fiber-optic cable (with cable ties) to the rear covers of the EPN stack.
   - Coil up the surplus length of fiber-optic cable, and place the coil in the cable manager.

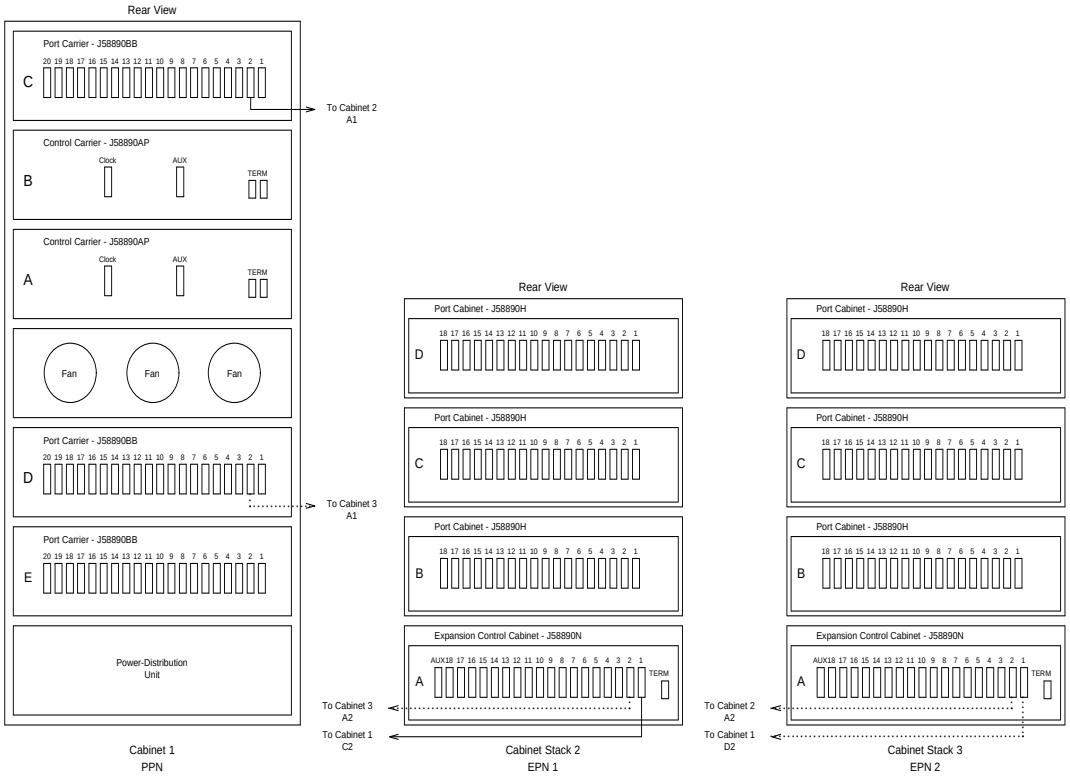

Figure 5-24. High-Reliability G3r V4 with Two or Three Port Networks

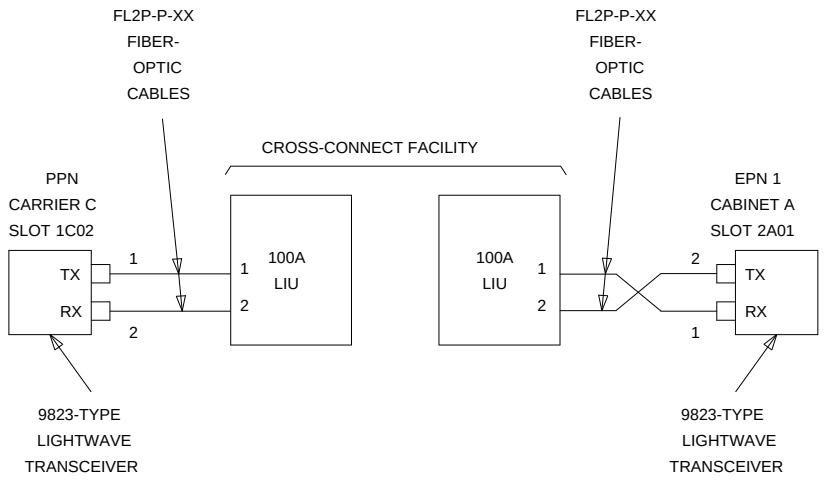

Figure 5-25. Fiber-Optic Connections PPN to EPN1

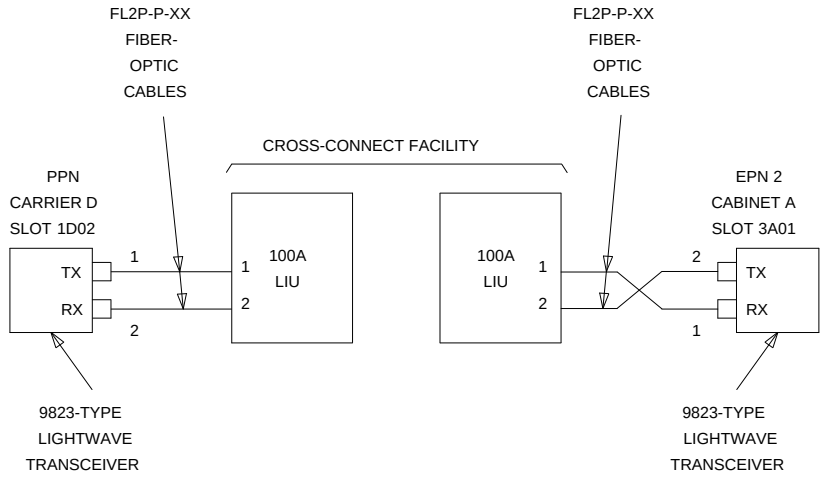

Figure 5-26. Fiber-Optic Connections PPN to EPN2

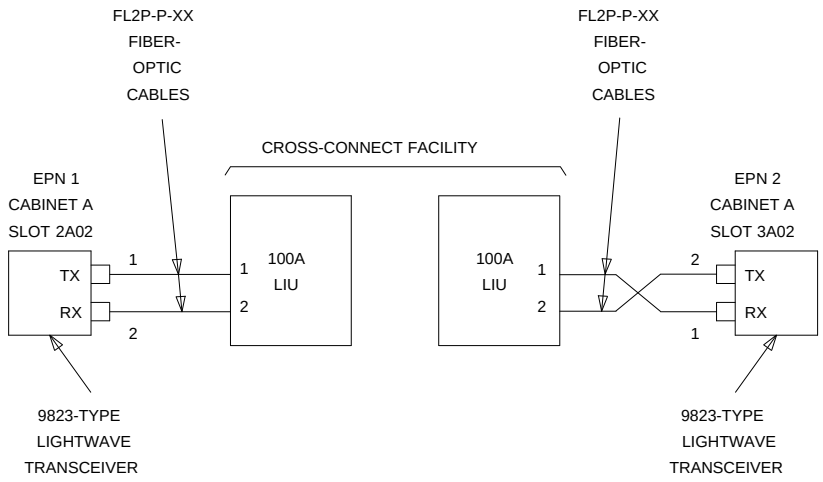

Figure 5-27. Fiber-Optic Connections EPN1 to EPN2

Interconnect Port Networks — Critical-Reliability G3r V4 System

See NOTES. Fiber-optic cabling terminated to the various lightwave transceivers can interconnect port networks (PNs) to various maximum distances:

- 9823A transceivers can support fiber connections up to 4,900 ft. (about 0.9 miles)
- 9823B transceivers can support fiber connections up to 25,000 ft (about 4.7 miles)

When available and whenever the desired distance between the port networks is less than 25,000 feet, fiber is the preferred medium for interconnecting port networks, providing significantly higher-bandwidth connectivity than DS1C remoting.

NOTE:
As always, these distance limitations are approximate measurements of the *actual* fiber right-of-way (not of the shortest linear distance) between the two endpoints.

NOTE:
It is important to label every cable that you install. For details, refer to the section, *Labels for Fiber-Optic Cables*, in Appendix E of the installation manual.

NOTE:
Throughout these procedures, remember to keep track of which fiber is attached to which connector on each lightwave transceiver. This section provides figures offering the suggested way of making these connections.

The connectors on the lightwave transceivers are labeled either “TX” (transmit) or “RX” (receive), while the fibers attached to each connector are numbered either ‘‘1’’ or ‘‘2.’’ A viable fiber connection is only made when both fibers in each cable (that is, ‘‘1’’ and ‘‘2’’) route from the “TX” connector of a port network to the “RX” connector of its adjacent port network. For an example, refer to Figure 5-29.

NOTE:
For implementation details, refer to the ‘‘Fiber Link Administration’’ sections of *DEFINITY Communications System Generic 3 V4 Implementation*, 555-230-655.

Collocated Port Networks

For a critical-reliability system with one collocated expansion port network, two fiber-optic cables (FL2P-P-XX) and four lightwave transceivers (9823-type) are required to directly connect the networks.

For a critical-reliability system with two collocated expansion port networks, six fiber-optic cables (FL2P-P-XX) and twelve lightwave transceivers (9823-type) are required to directly connect the networks.

NOTE:
For the FL2P-P-XX fiber-optic cable, the -XX suffix represents the length of the cable in feet. Based on floor-plan considerations, the length of these cables may vary. However, 20-foot cables are normally adequate for a G3r V4 with two port networks.

See NOTE. For collocated cabinets, the fiber-optic cables should be routed directly from the PPN to each EPN cabinet. Since, for this upgrade, a ''DEFINITY style'' PPN cabinet is collocated with a single-carrier cabinet stack, the preferred routing is to run the cables *down* the cable tray and out the bottom of the PPN cabinet. The cables are then run to the EPN cabinet and up the outside of the rear panels to the desired carrier level.

If, for this upgrade, a ''DEFINITY style'' PPN cabinet is also collocated with another ''DEFINITY style'' multicarrier EPN cabinet, the preferred routing is to run the cables *up* the cable tray and out the top of the PPN cabinet. The cables are then run to the other cabinet, through the top of the cabinet, and down the cable tray to the desired carrier level.

NOTE:
Refer to Appendix E of *DEFINITY Communications System Generic 1 and Generic 3 Installation and Test*, 555-230-104, Issue 5, for additional guidelines about fiber routing.

Fiber-Remoted Port Networks

For a critical-reliability system with one fiber-remoted expansion port network, four fiber-optic cables (FL2P-P-XX), four lightwave transceivers (9823-type), and four lightwave-interface units (provided by the PSC) are required.

For a critical-reliability system with two fiber-remoted expansion port networks, twelve fiber-optic cables (FL2P-P-XX), twelve lightwave transceivers (9823-type), and twelve lightwave-interface units (provided by the PSC) are required.

DS1C-Remoted Port Networks

For a critical-reliability system with one DS1C-remoted expansion port network, this arrangement requires:

- Four DS1C circuit packs (TN574)
- Four DS1C-to-EI cables (846448637 and/or 846448645)
- Four H-600-348 cables
- Two, four, six, or eight pairs of channel service units (CSUs)
- Two, four, six, or eight pairs of wall-field cables (provided with the CSUs)

For a critical-reliability system with two DS1C-remoted expansion port networks, this arrangement requires:

- 12 DS1C circuit packs (TN574)
- 12 DS1C-to-EI cables (846448637 and/or 846448645)
- 12 H-600-348 cables
- 6, 12, 18, or 24 pairs of channel service units (CSUs)
- 6, 12, 18, or 24 pairs of wall-field cables (provided with the CSUs)

For One or Two Collocated Expansion Port Networks

1. Behind port carrier C of the multicarrier PPN (see Figure 5-28, Figure 5-29, Figure 5-30, and Figure 5-31):
    - Install a 9823-type lightwave transceiver on the connector at slot 1C02.
    - Connect one end of the fiber-optic cable to the lightwave transceiver at slot 1C02.
    - Route the fiber-optic cable from the 9823-type lightwave transceiver to the cabinet's cable tray and downward out of the cabinet to the EPN stack.
    - Delicately attach the fiber-optic cable (with cable ties) to the wall of the cable tray at the built-in cable-tie positions.
2. Behind port cabinet B of EPN stack 2:
    - Install the same kind (either 9823-A or 9823-B) of lightwave transceiver on the connector at slot 2B02.
    - Connect the other end of the fiber-optic cable coming from the PPN to the lightwave transceiver at slot 2B02.
    - Delicately attach the fiber-optic cable (with cable ties) to the rear covers of the EPN stack.
    - Coil up the surplus length of fiber-optic cable, and place the coil either in the cable manager or on the bottom shelf (holding the power supply) of the PPN cabinet.
3. Behind port carrier D of the multicarrier PPN:
    - Install a 9823-type lightwave transceiver on the connector at slot 1D02.
    - Connect one end of the fiber-optic cable to the lightwave transceiver at slot 1D02.
    - Route the fiber-optic cable from the 9823-type lightwave transceiver to the cabinet's cable tray and downward out of the cabinet to the EPN stack.

- Delicately attach the fiber-optic cable (with cable ties) to the wall of the cable tray at the built-in cable-tie positions.

4. Behind control cabinet A of EPN stack 2:
   - Install the same kind (either 9823-A or 9823-B) of lightwave transceiver on the connector at slot 2A01.
   - Connect the other end of the fiber-optic cable coming from the PPN to the lightwave transceiver at slot 2A01.
   - Delicately attach the fiber-optic cable (with cable ties) to the rear covers of the EPN stack.
   - Coil up the surplus length of fiber-optic cable, and place the coil either in the cable manager or on the bottom shelf (holding the power supply) of the PPN cabinet.

For Two Collocated Expansion Port Networks

1. Behind port carrier C of the multicarrier PPN:
   - Install a 9823-type lightwave transceiver on the connector at slot 1C03.
   - Connect one end of the fiber-optic cable to the lightwave transceiver at slot 1C03.
   - Route the fiber-optic cable from the 9823-type lightwave transceiver to the cabinet's cable tray and downward out of the cabinet to the EPN stack.
   - Delicately attach the fiber-optic cable (with cable ties) to the wall of the cable tray at the built-in cable-tie positions.
2. Behind port cabinet B of EPN stack 3:
   - Install the same kind (either 9823-A or 9823-B) of lightwave transceiver on the connector at slot 3B02.
   - Connect the other end of the fiber-optic cable coming from the PPN to the lightwave transceiver at slot 3B02.
   - Delicately attach the fiber-optic cable (with cable ties) to the rear covers of the EPN stack.
   - Coil up the surplus length of fiber-optic cable, and place the coil either in the cable manager or on the bottom shelf (holding the power supply) of the PPN cabinet.

3. Behind port carrier D of the multicarrier PPN:
   - Install a 9823-type lightwave transceiver on the connector at slot 1D03.
   - Connect one end of the fiber-optic cable to the lightwave transceiver at slot 1D03.
   - Route the fiber-optic cable from the 9823-type lightwave transceiver to the cabinet's cable tray and downward out of the cabinet to the EPN stack.
   - Delicately attach the fiber-optic cable (with cable ties) to the wall of the cable tray at the built-in cable-tie positions.
4. Behind control cabinet A of EPN stack 3:
   - Install the same kind (either 9823-A or 9823-B) of lightwave transceiver on the connector at slot 3A01.
   - Connect the other end of the fiber-optic cable coming from the PPN to the lightwave transceiver at slot 3A01.
   - Delicately attach the fiber-optic cable (with cable ties) to the rear covers of the EPN stack.
   - Coil up the surplus length of fiber-optic cable, and place the coil either in the cable manager or on the bottom shelf (holding the power supply) of the PPN cabinet.
5. Behind control cabinet A of EPN stack 2:
   - Install a 9823-type lightwave transceiver on the connector at slot 2A02.
   - Connect one end of the fiber-optic cable to the lightwave transceiver at slot 2A02.
   - Route the fiber-optic cable from the lightwave transceiver down the outside of the rear covers to the other EPN stack.
   - Delicately attach the fiber-optic cable (with cable ties) to the rear covers of the EPN stack.
6. Behind control cabinet A of EPN stack 3:
   - Install the same kind (either 9823-A or 9823-B) of lightwave transceiver on the connector at slot 3A02.
   - Connect the other end of the fiber-optic cable coming from the PPN to the lightwave transceiver at slot 3A02.
   - Delicately attach the fiber-optic cable (with cable ties) to the rear covers of the EPN stack.
   - Coil up the surplus length of fiber-optic cable, and delicately attach the coil (with a cable tie) to a leg of an EPN cable clamp.

7. Behind port cabinet B of EPN stack 2:
   - Install a 9823-type lightwave transceiver on the connector at slot 2B03.
   - Connect one end of the fiber-optic cable to the lightwave transceiver at slot 2B03.
   - Route the fiber-optic cable from the lightwave transceiver down the outside of the rear covers to the other EPN stack.
   - Delicately attach the fiber-optic cable (with cable ties) to the rear covers of the EPN stack.
8. Behind port cabinet B of EPN stack 3:
   - Install the same kind (either 9823-A or 9823-B) of lightwave transceiver on the connector at slot 3B03.
   - Connect the other end of the fiber-optic cable coming from the PPN to the lightwave transceiver at slot 3B03.
   - Delicately attach the fiber-optic cable (with cable ties) to the rear covers of the EPN stack.
   - Coil up the surplus length of fiber-optic cable, and delicately attach the coil (with a cable tie) to a leg of an EPN cable clamp.

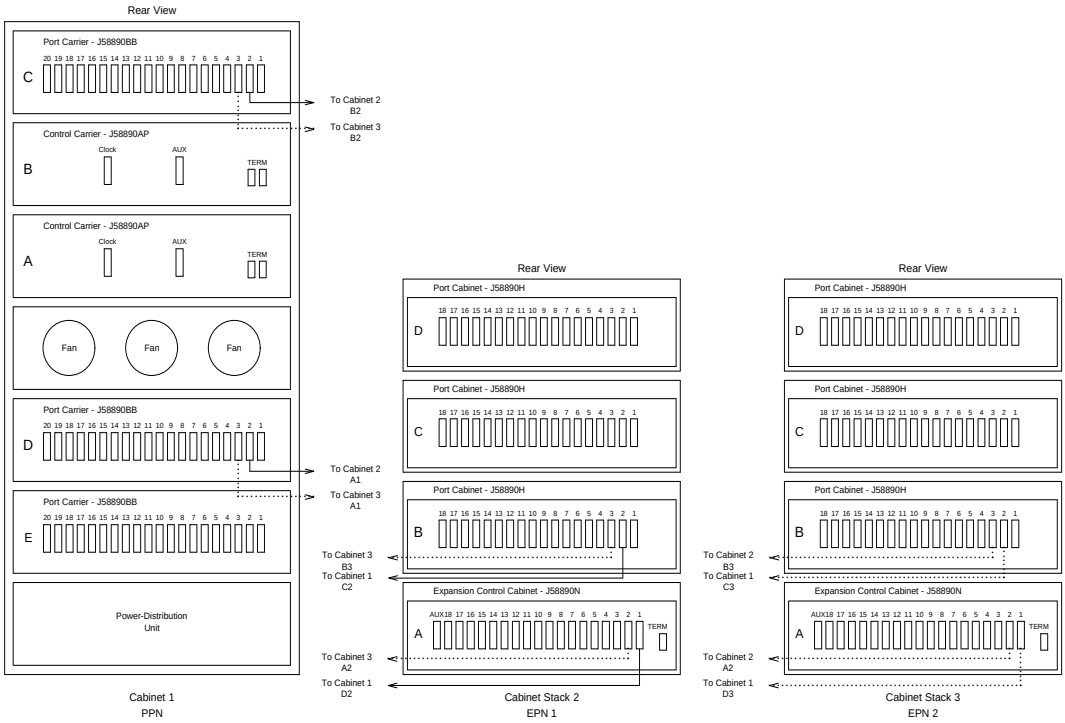

Figure 5-28. Critical-Reliability G3r V4 with Two or Three Port Networks

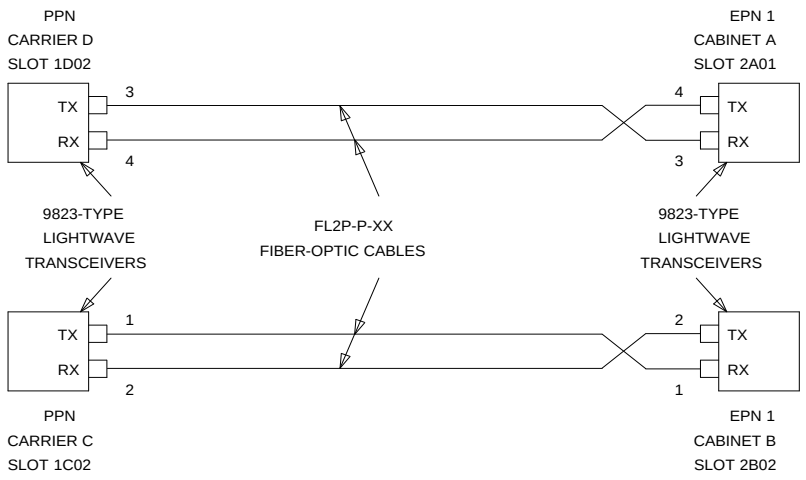

Figure 5-29. Fiber-Optic Connections PPN to EPN1

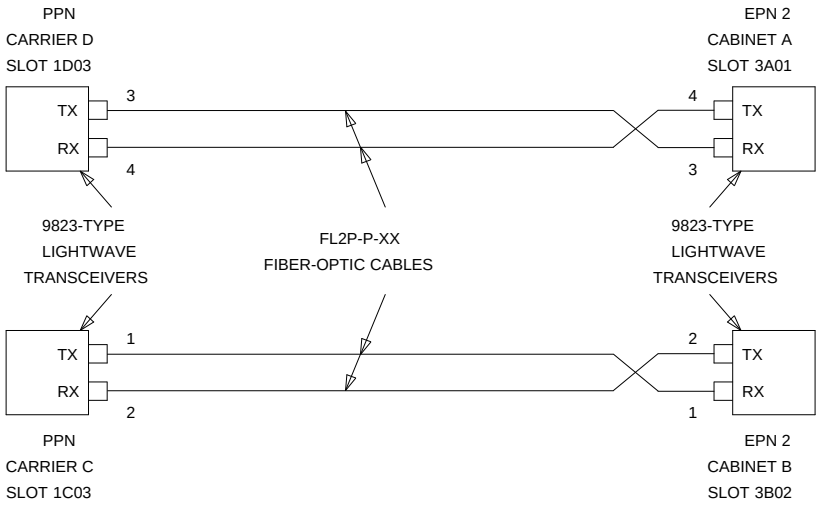

Figure 5-30. Fiber-Optic Connections PPN to EPN2

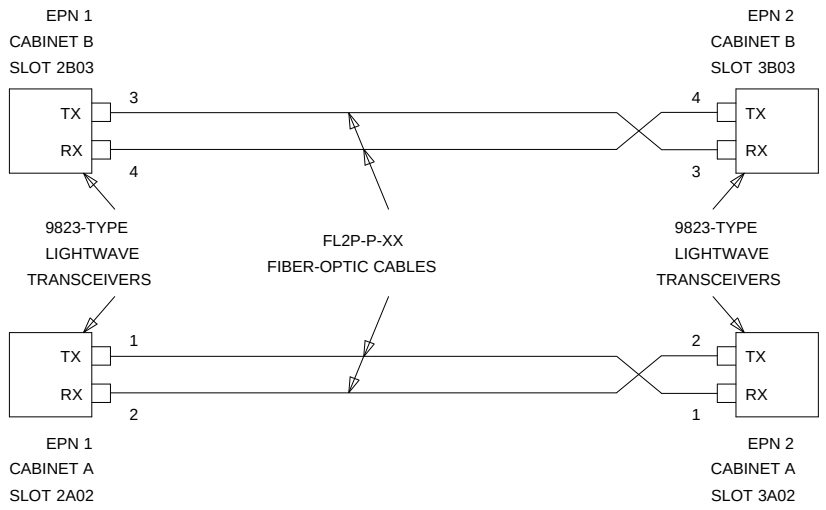

Figure 5-31. Fiber-Optic Connections EPN1 to EPN2

For One or Two Fiber-Remoted Expansion Port Networks

1. Behind port carrier C of the multicarrier PPN (Figure 5-32, Figure 5-33, Figure 5-34, and Figure 5-35):
   - Install a 9823-type lightwave transceiver on the connector at slot 1C02.
   - Connect one end of the fiber-optic cable to the lightwave transceiver at slot 1C02.
   - Route the fiber-optic cable from the lightwave transceiver to the cabinet cable tray and out of the cabinet through the cable manager to the PDS cross-connect facility.
   - At the PDS cross-connect facility, connect the fiber-optic cable to the lightwave-interface unit provided.
   - Delicately attach the fiber-optic cable (with cable ties) to the wall of the cable tray at the built-in cable-tie positions.
2. Behind port cabinet B of EPN stack 2:
   - Install the same kind (either 9823-A or 9823-B) of lightwave transceiver on the connector at slot 2B02.
   - Connect the fiber-optic cable to the lightwave transceiver at slot 2B02.
   - Route the fiber-optic cable from the lightwave transceiver down the outside of the rear covers and through the cable manager to the PDS cross-connect facility.
   - At the PDS cross-connect facility, connect the fiber-optic cable to the lightwave-interface unit provided.
   - Delicately attach the fiber-optic cable (with cable ties) to the rear covers of the EPN stack.
   - Coil up the surplus length of fiber-optic cable, and place the coil in the cable manager.
3. Behind port carrier D of the multicarrier PPN:
   - Install a 9823-type lightwave transceiver on the connector at slot 1D02.
   - Connect one end of the fiber-optic cable to the lightwave transceiver at slot 1D02.
   - Route the fiber-optic cable from the lightwave transceiver to the cabinet cable tray and out of the cabinet through the cable manager to the PDS cross-connect facility.
   - At the PDS cross-connect facility, connect the fiber-optic cable to the lightwave-interface unit provided.

- Delicately attach the fiber-optic cable (with cable ties) to the wall of the cable tray at the built-in cable-tie positions.

4. Behind control cabinet A of EPN stack 2:
   - Install the same kind (either 9823-A or 9823-B) of lightwave transceiver on the connector at slot 2A01.
   - Connect the fiber-optic cable to the lightwave transceiver at slot 2A01.
   - Route the fiber-optic cable from the lightwave transceiver down the outside of the rear covers and through the cable manager to the PDS cross-connect facility.
   - At the PDS cross-connect facility, connect the fiber-optic cable to the lightwave-interface unit provided.
   - Delicately attach the fiber-optic cable (with cable ties) to the rear covers of the EPN stack.
   - Coil up the surplus length of fiber-optic cable, and place the coil in the cable manager.

For Two Fiber-Remoted Expansion Port Networks

1. Behind port carrier C of the multicarrier PPN:
   - Install a 9823-type lightwave transceiver on the connector at slot 1C03.
   - Connect one end of the fiber-optic cable to the lightwave transceiver at slot 1C03.
   - Route the fiber-optic cable from the lightwave transceiver to the cabinet cable tray and out of the cabinet through the cable manager to the PDS cross-connect facility.
   - At the PDS cross-connect facility, connect the fiber-optic cable to the lightwave-interface unit provided.
   - Delicately attach the fiber-optic cable (with cable ties) to the wall of the cable tray at the built-in cable-tie positions.
2. Behind port cabinet B of EPN stack 3:
   - Install the same kind (either 9823-A or 9823-B) of lightwave transceiver on the connector at slot 3B02.
   - Connect the fiber-optic cable to the lightwave transceiver at slot 3B02.
   - Route the fiber-optic cable from the lightwave transceiver down the outside of the rear covers and through the cable manager to the PDS cross-connect facility.
   - At the PDS cross-connect facility, connect the fiber-optic cable to the lightwave-interface unit provided.

- Delicately attach the fiber-optic cable (with cable ties) to the rear covers of the EPN stack.
- Coil up the surplus length of fiber-optic cable, and place the coil in the cable manager.

3. Behind port carrier D of the multicarrier PPN:
   - Install a 9823-type lightwave transceiver on the connector at slot 1D03.
   - Connect one end of the fiber-optic cable to the lightwave transceiver at slot 1D03.
   - Route the fiber-optic cable from the lightwave transceiver to the cabinet cable tray and out of the cabinet through the cable manager to the PDS cross-connect facility.
   - At the PDS cross-connect facility, connect the fiber-optic cable to the lightwave-interface unit provided.
   - Delicately attach the fiber-optic cable (with cable ties) to the wall of the cable tray at the built-in cable-tie positions.
4. Behind control cabinet A of EPN stack 3:
   - Install the same kind (either 9823-A or 9823-B) of lightwave transceiver on the connector at slot 3A01.
   - Connect the fiber-optic cable to the lightwave transceiver at slot 3A01.
   - Route the fiber-optic cable from the lightwave transceiver down the outside of the rear covers and through the cable manager to the PDS cross-connect facility.
   - At the PDS cross-connect facility, connect the fiber-optic cable to the lightwave-interface unit provided.
   - Delicately attach the fiber-optic cable (with cable ties) to the rear covers of the EPN stack.
   - Coil up the surplus length of fiber-optic cable, and place the coil in the cable manager.
5. Behind control cabinet A of EPN stack 2:
   - Install a 9823-type lightwave transceiver on the connector at slot 2A02.
   - Connect one end of the fiber-optic cable to the lightwave transceiver at slot 2A02.
   - Route the fiber-optic cable from the lightwave transceiver down the outside of the rear covers and through the cable manager to the PDS cross-connect facility.

- At the PDS cross-connect facility, connect the fiber-optic cable to the lightwave-interface unit provided.
- Delicately attach the fiber-optic cable (with cable ties) to the rear covers of the EPN stack.

6. Behind control cabinet A of EPN stack 3:
   - Install the same kind (either 9823-A or 9823-B) of lightwave transceiver on the connector at slot 3A02.
   - Connect the fiber-optic cable to the lightwave transceiver at slot 3A02.
   - Route the fiber-optic cable from the lightwave transceiver down the outside of the rear covers and through the cable manager to the PDS cross-connect facility.
   - At the PDS cross-connect facility, connect the fiber-optic cable to the lightwave-interface unit provided.
   - Delicately attach the fiber-optic cable (with cable ties) to the rear covers of the EPN stack.
   - Coil up the surplus length of fiber-optic cable, and place the coil in the cable manager.
7. Behind port cabinet B of EPN stack 2:
   - Install a 9823-type lightwave transceiver on the connector at slot 2B03.
   - Connect one end of the fiber-optic cable to the lightwave transceiver at slot 2B03.
   - Route the fiber-optic cable from the lightwave transceiver down the outside of the rear covers and through the cable manager to the PDS cross-connect facility.
   - At the PDS cross-connect facility, connect the fiber-optic cable to the lightwave-interface unit provided.
   - Delicately attach the fiber-optic cable (with cable ties) to the rear covers of the EPN stack.
8. Behind port cabinet B of EPN stack 3:
   - Install the same kind (either 9823-A or 9823-B) of lightwave transceiver on the connector at slot 3B03.
   - Connect the fiber-optic cable to the lightwave transceiver at slot 3B03.
   - Route the fiber-optic cable from the lightwave transceiver down the outside of the rear covers and through the cable manager to the PDS cross-connect facility.

- At the PDS cross-connect facility, connect the fiber-optic cable to the lightwave-interface unit provided.
- Delicately attach the fiber-optic cable (with cable ties) to the rear covers of the EPN stack.
- Coil up the surplus length of fiber-optic cable, and place the coil in the cable manager.

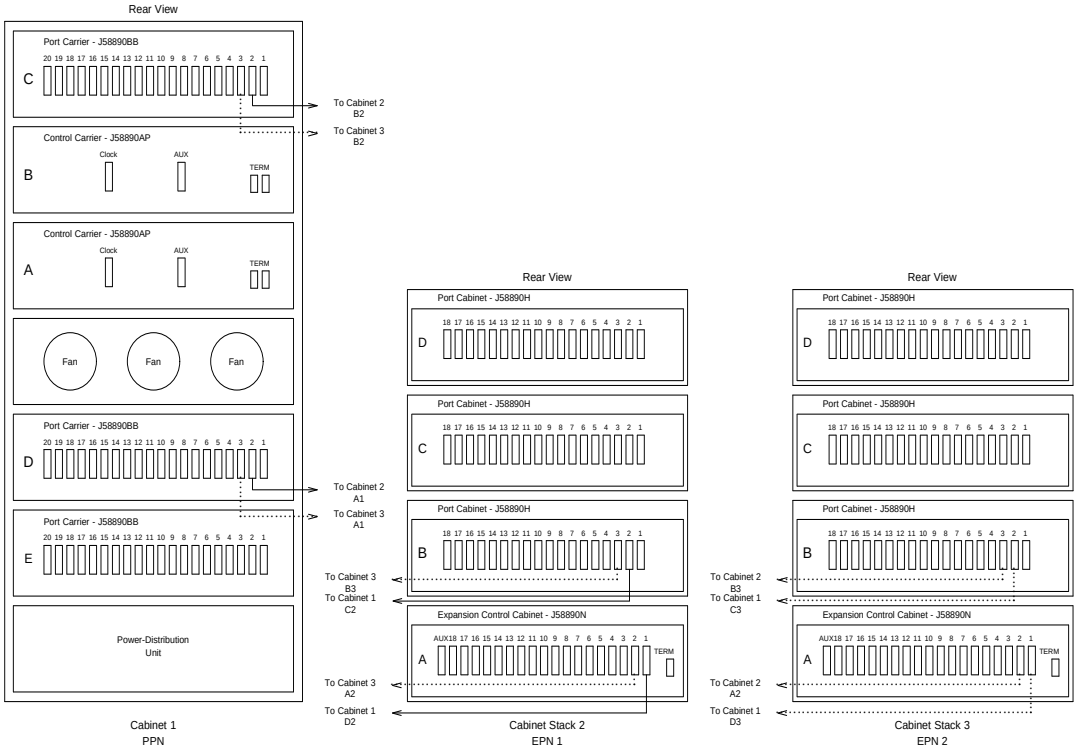

Figure 5-32. Critical-Reliability G3r V4 with Two or Three Port Networks

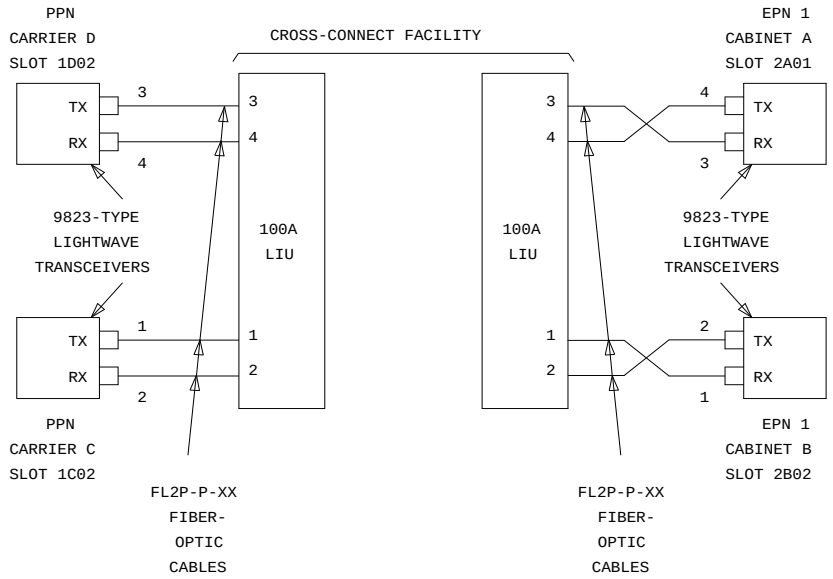

Figure 5-33. Fiber-Optic Connections PPN to EPN1

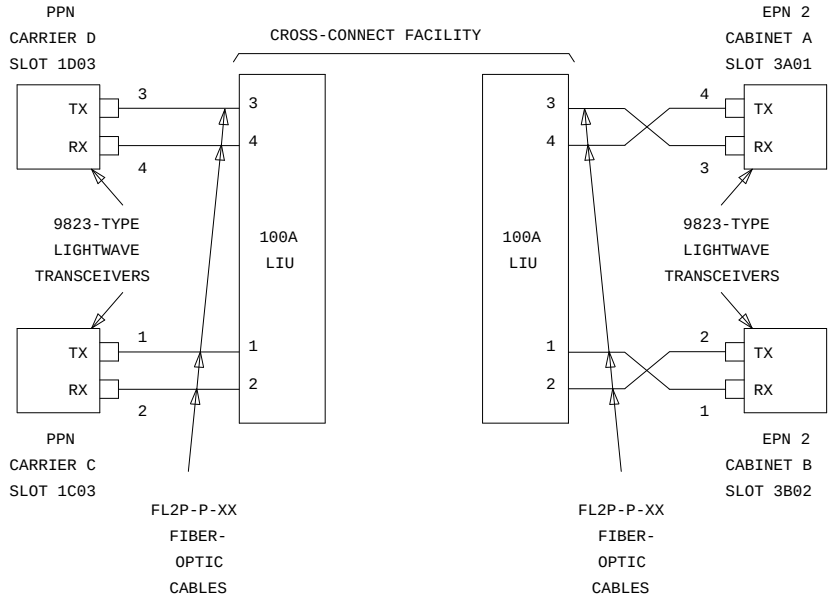

Figure 5-34. Fiber-Optic Connections PPN to EPN2

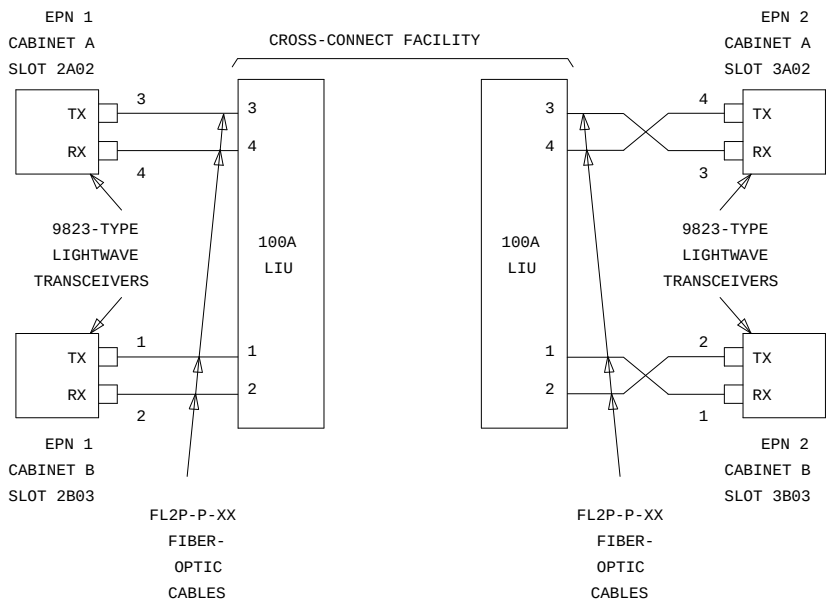

Figure 5-35. Fiber-Optic Connections EPN1 to EPN2

Switch-Connected Port Networks

For One to Fifteen Standard-Reliability EPNs.

1. Behind the PPN cabinet (see Figure 5-36):
   - Install a 9823-type lightwave transceiver on cable connector at slot 1E02.
   - Install a 9823-type lightwave transceiver on cable connector at slot 1B02.
   - Connect one end of the metallic intercarrier cable to the lightwave transceiver at slot 1E02.
   - Route the intercarrier cable from the lightwave transceiver to the cabinet's cable tray and upward to carrier ''B.''
   - Connect the other end of the intercarrier cable to the lightwave transceiver at slot 1B02.
   - Attach the intercarrier cable (with cable ties) to the wall of the cable tray at the built-in cable-tie positions.
2. Behind switch node carrier E of PPN cabinet 1 (see Figure 5-36):
   - For each EPN, install one 9823-type lightwave transceiver on a cable connector with the following order of slots: 1E20, 1E03, 1E19, 1E04, 1E18, 1E05, etc.
   - Connect one end of each fiber-optic cable to each lightwave transceiver, just installed.
   - Delicately attach the fiber-optic cables (with cable ties) to the wall of the cable tray at the built-in cable-tie positions.
3. Behind control cabinet A of each single-carrier EPN:
   - Install the same kind (either 9823-A or 9823-B) of lightwave transceiver on cable connector at slot A01.
   - Connect the other end of the fiber-optic cable to the lightwave transceiver, just installed, at slot A01.
   - Delicately attach the fiber-optic cable (with cable ties) to the rear covers of the EPN stack.
   - Coil up the surplus length of fiber-optic cable, and place the coil either in the cable manager or on the bottom shelf (holding the power supply) of the PPN cabinet.

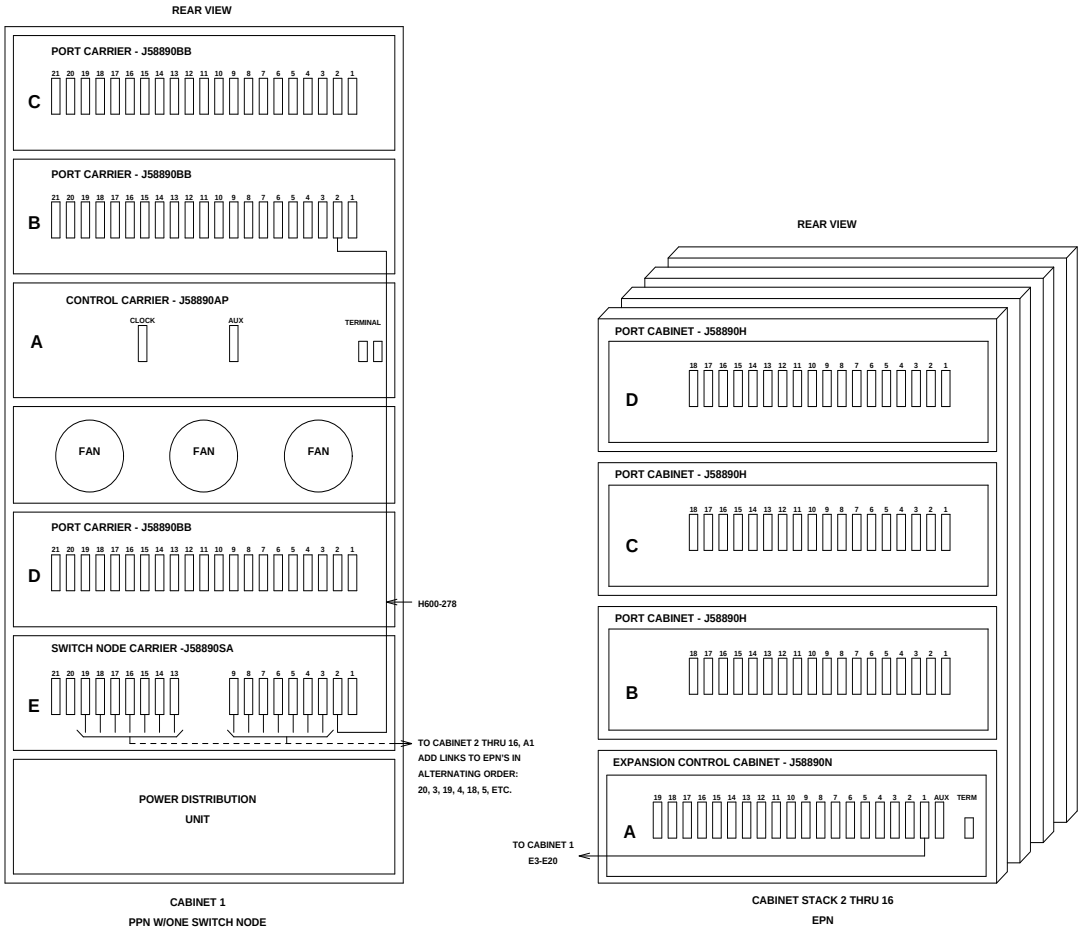

Figure 5-36. Fiber-Optic Connections through Center Stage Switch

For One to Fifteen High-Reliability EPNs.

1. Behind the PPN cabinet (see Figure 5-37):
   - Install a 9823-type lightwave transceiver on cable connector at slot 1E02.
   - Install a 9823-type lightwave transceiver on cable connector at slot 1C02.
   - Connect one end of the metallic intercarrier cable to the lightwave transceiver at slot 1E02.
   - Route the intercarrier cable from the lightwave transceiver to the cabinet's cable tray and upward to carrier ''C.''
   - Connect the other end of the intercarrier cable to the lightwave transceiver at slot 1C02.
   - Install a 9823-type lightwave transceiver on cable connector at slot 1E20.
   - Install a 9823-type lightwave transceiver on cable connector at slot 1D02.
   - Connect one end of the metallic intercarrier cable to the lightwave transceiver at slot 1E20.
   - Route the intercarrier cable from the lightwave transceiver to the cabinet's cable tray and upward to carrier ''D.''
   - Connect the other end of the intercarrier cable to the lightwave transceiver at slot 1D02.
   - Attach the intercarrier cables (with cable ties) to the wall of the cable tray at the built-in cable-tie positions.
2. Behind switch node carrier E of PPN cabinet 1 (see Figure 5-37):
   - For each EPN, install one 9823-type lightwave transceiver on a cable connector with the following order of slots: 1E03, 1E19, 1E04, 1E18, 1E05, 1E17, etc.
   - Connect one end of each fiber-optic cable to each lightwave transceiver, just installed.
   - Delicately attach the fiber-optic cables (with cable ties) to the wall of the cable tray at the built-in cable-tie positions.
3. Behind control cabinet A of each single-carrier EPN:
   - Install the same kind (either 9823-A or 9823-B) of lightwave transceiver on cable connector at slot A01.
   - Connect the other end of the fiber-optic cable to the lightwave transceiver, just installed, at slot A01.

- Delicately attach the fiber-optic cable (with cable ties) to the rear covers of the EPN stack.
- Coil up the surplus length of fiber-optic cable, and place the coil either in the cable manager or on the bottom shelf (holding the power supply) of the PPN cabinet.

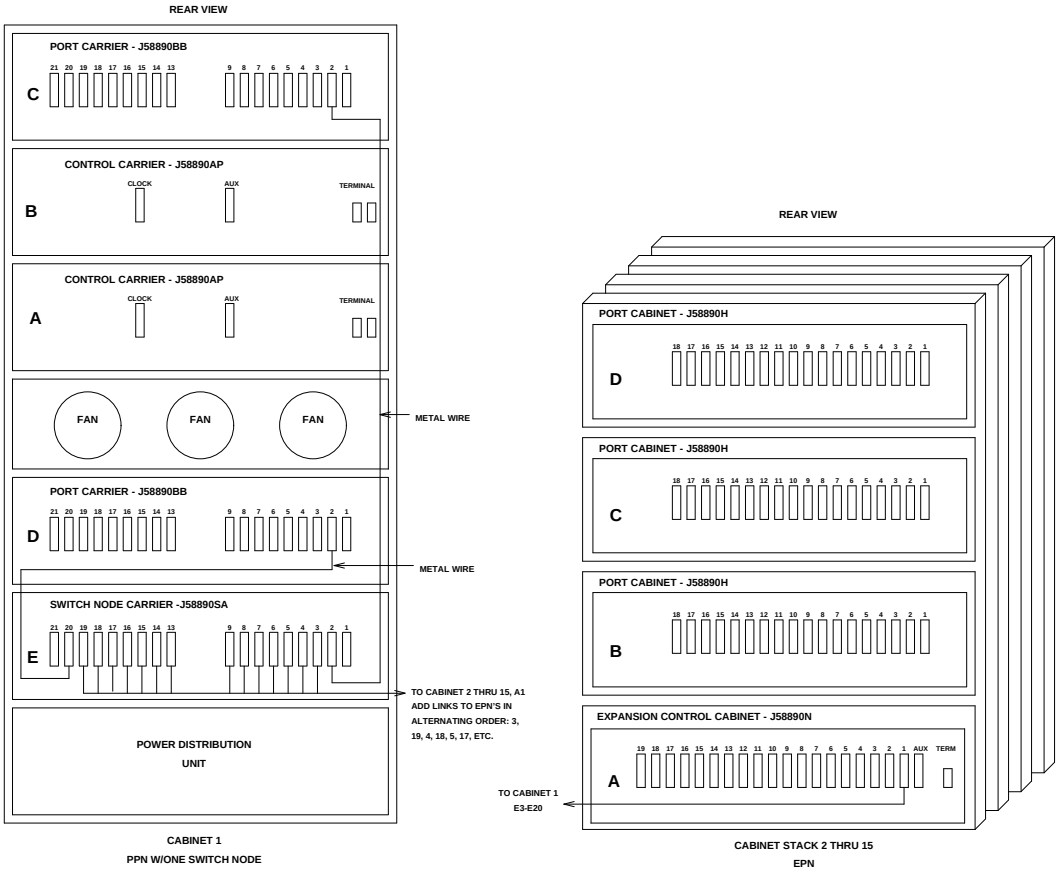

Figure 5-37. Fiber-Optic Connections through Center Stage Switch

For One to Fifteen Critical-Reliability EPNs.

1. Behind the PPN cabinet (see Figure 5-38):
   - Install a 9823-type lightwave transceiver on cable connector at slot 1E01.
   - Install a 9823-type lightwave transceiver on cable connector at slot 1E02.
   - Connect the metallic intracarrier cable to the lightwave transceivers at slots 1E01 and 1E02.
   - Install a 9823-type lightwave transceiver on cable connector at slot 1D01.
   - Install a 9823-type lightwave transceiver on cable connector at slot 1D02.
   - Connect the metallic intracarrier cable to the lightwave transceivers at slots 1D01 and 1D02.
2. Behind switch node carrier E of PPN cabinet 1 (see Figure 5-38):
   - For each EPN, install one 9823-type lightwave transceiver on a cable connector with the following order of slots: 1E20, 1E03, 1E19, 1E04, 1E18, 1E05, etc.
   - Connect one end of each fiber-optic cable to each lightwave transceiver, just installed.
   - Delicately attach the fiber-optic cables (with cable ties) to the wall of the cable tray at the built-in cable-tie positions.
3. Behind control cabinet A of each single-carrier EPN:
   - Install the same kind (either 9823-A or 9823-B) of lightwave transceiver on cable connector at slot A01.
   - Connect the other end of the fiber-optic cable to the lightwave transceiver, just installed, at slot A01.
   - Delicately attach the fiber-optic cable (with cable ties) to the rear covers of the EPN stack.
   - Coil up the surplus length of fiber-optic cable, and place the coil either in the cable manager or on the bottom shelf (holding the power supply) of the PPN cabinet.
4. Behind switch node carrier D of PPN cabinet 1 (see Figure 5-38):
   - For each EPN, install one 9823-type lightwave transceiver on a cable connector with the following order of slots: 1E20, 1E03, 1E19, 1E04, 1E18, 1E05, etc.
   - Connect one end of each fiber-optic cable to each lightwave transceiver, just installed.
   - Delicately attach the fiber-optic cables (with cable ties) to the wall of the cable tray at the built-in cable-tie positions.

5. Behind port cabinet B of each single-carrier EPN:
   - Install the same kind (either 9823-A or 9823-B) of lightwave transceiver on cable connector at slot B02.
   - Connect the other end of the fiber-optic cable to the lightwave transceiver, just installed, at slot B02.
   - Delicately attach the fiber-optic cable (with cable ties) to the rear covers of the EPN stack.
   - Coil up the surplus length of fiber-optic cable, and place the coil either in the cable manager or on the bottom shelf (holding the power supply) of the PPN cabinet.

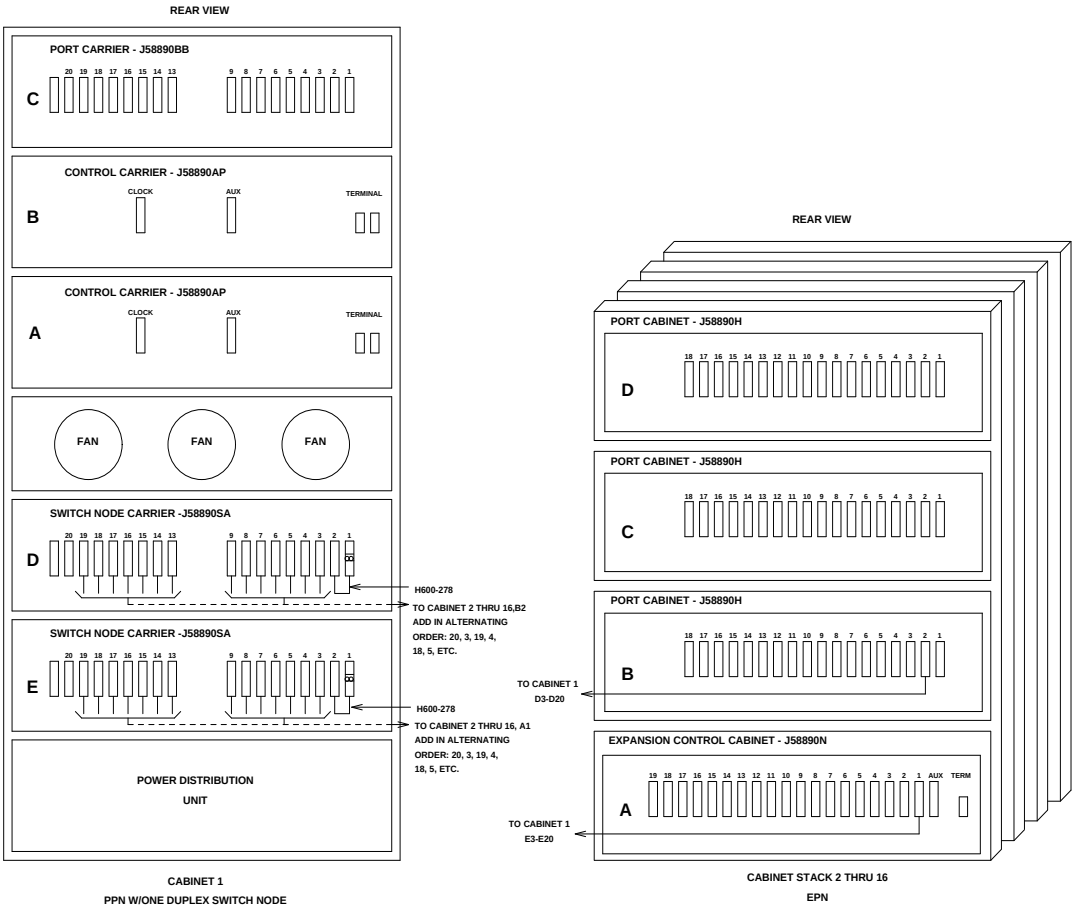

Figure 5-38. Fiber-Optic Connections through Center Stage Switch

DS1C-Remoted Cabinets

See NOTES. Digital Services 1 (DS1) facilities and associated equipment-room hardware and cabling can interconnect two port networks (PNs) located up to 100 miles apart. Although DS1 remoting always serves as a lower-bandwidth alternative to fiber remoting, DS1 remoting is especially attractive when:

- Fiber-optic cabling is unavailable to the remote site
- When the desired distance between the port networks exceeds the practical fiber limit of 25,000 feet (about 4.7 miles)
- Digital Services facilities, with enough bandwidth for interconnection, already exist between the two port networks

NOTE:
As always, these distance limitations are approximate measurements of the *actual* fiber or copper right-of-way (not of the shortest linear distance) between the two endpoints.

NOTE:
The 100-mile limit for DS1 remoting is the maximum distance between *any* two port networks in a G3r V4 system with either direct or switched port-network connections.

For example, in a *directly connected* system, a single EPN can be remoted up to 100 miles. This is because the length of the *direct* fiber connection from any port network in the local equipment room to the remote EPN is 100 miles.

However, if more than one EPN is remoted in a directly connected system, the 100-mile limit applies to any two port networks. Assuming straight cable runs, suppose that a customer wants to remote one EPN 80 miles due east and another EPN due north of the local PPN. This arrangement can only be accommodated if the second EPN resides no more than 60 miles north of the PPN. This is because the direct fiber distance between the two EPNs is also limited to 100 miles.

As another example, in *switch-connected* system with numerous port networks, one EPN might be remoted 75 miles from the switch node. If this were the case, then the maximum distance that any other EPN could be remoted would be 25 miles.

Digital public-network tie-trunk facilities provide the end-to end connectivity between the port networks. For either type of port network (PPN or EPN), a TN574 DS1 Converter (DS1C) circuit pack serves as the port-network interface to the DS1 facilities. As a PPN interface, a TN574 DS1C can reside in either:

- A port carrier (in any port slot)
- A switch-node carrier (in port slot ‘‘1’’ or ‘‘21’’)

As an EPN interface, a TN574 DS1C can reside in an expansion control carrier (in any port slot).

DS1 Cabling within the Local Port Networks. See NOTE. Use the running list that accompanies the upgrade equipment to determine which cable should be connected where. The following paragraphs only provide conceptual information about wiring a DS1C interface either to an expansion interface or to a switch-node interface, not step-by-step procedures for wiring a specific G3r V4 system.

NOTE:
It is important to label every cable that you install. For details, refer to the section, *Labels for Fiber-Optic Cables*, in Appendix E of the installation manual.

See NOTE. As shown in Figure 5-39, a cable connects each DS1C either to the appropriate TN570 expansion interface (for a direct connection to another port network) or to the appropriate TN573 SN Interface (for a switched connection to another port network).

NOTE:
For the purposes of a G1 or G3i to G3r V4 upgrade, these cables will usually connect to TN570 expansion interfaces (already installed) for direct connections between the new PPN and either one or two EPNs.

On the DS1C side, a 4C retainer binds this shielded cable to the DS1C port connector. On the EI/SNI side, a 4B retainer binds the cable to the EI/SNI port connector. The DS1C-to-EI/SNI cable also provides a piggy-back connector enabling subsequent access to the public network. Table 5-6 lists the cable numbers and lengths for the possible connections.

Table 5-6. Numbers and Lengths of DS1C-to-EI/SNI Cables

Connection Type	Comcode Number	Length
Within same carrier	846448637	1 foot
Between two carriers in same port network	846448645	5.5 feet
Between two carriers in adjacent networks	846448652, and one 846885259 bracket	1 foot (used with two 9823As, & one 20-foot fiber-optic cable)

DS1 Cabling to the Public Network. See NOTE. Use the running list that accompanies the upgrade equipment to determine which cable should be connected where. The following paragraphs only provide conceptual information about wiring a DS1C interface to a wall-field block, not step-by-step procedures for wiring a specific G3r V4 system.

NOTE:
It is important to label every cable that you install. For details, refer to the section, *Labels for Fiber-Optic Cables*, in Appendix E of the installation manual.

Figure 5-39 also shows the cabling between various port networks and the cross-connect field where the public network is accessed. If already connected to either an expansion or switch-node interface, a DS1C circuit pack already resides either in an EPN expansion control carrier or in a PPN port carrier or switch-node carrier (as already mentioned and shown in Figure 5-39).

Depending on the traffic requirements between the two port networks, a 25-foot H600-348 cable extends from the piggy-back connector (on each DS1C-to-EI/SNI cable) to from one to four channel service units (CSUs). [This cable branches to four 15-pin subminiature D-type connectors (labeled ‘‘01’’ to ‘‘04’’) to make the CSU connections.] Then, in turn, the CSU(s) are connected to the wall-field block (corresponding to the equipment location of the DS1C) at port connections ‘‘8,’’ ‘‘7,’’ ‘‘6,’’ and ‘‘5’’ (in descending order).

Neglecting overhead, this wiring arrangement can provide PN-to-PN communication at the bandwidth of up to four DS1 spans (1.544 Mbps each). Between each port network’s wall field, the port networks communicate across leased lines in the public network.

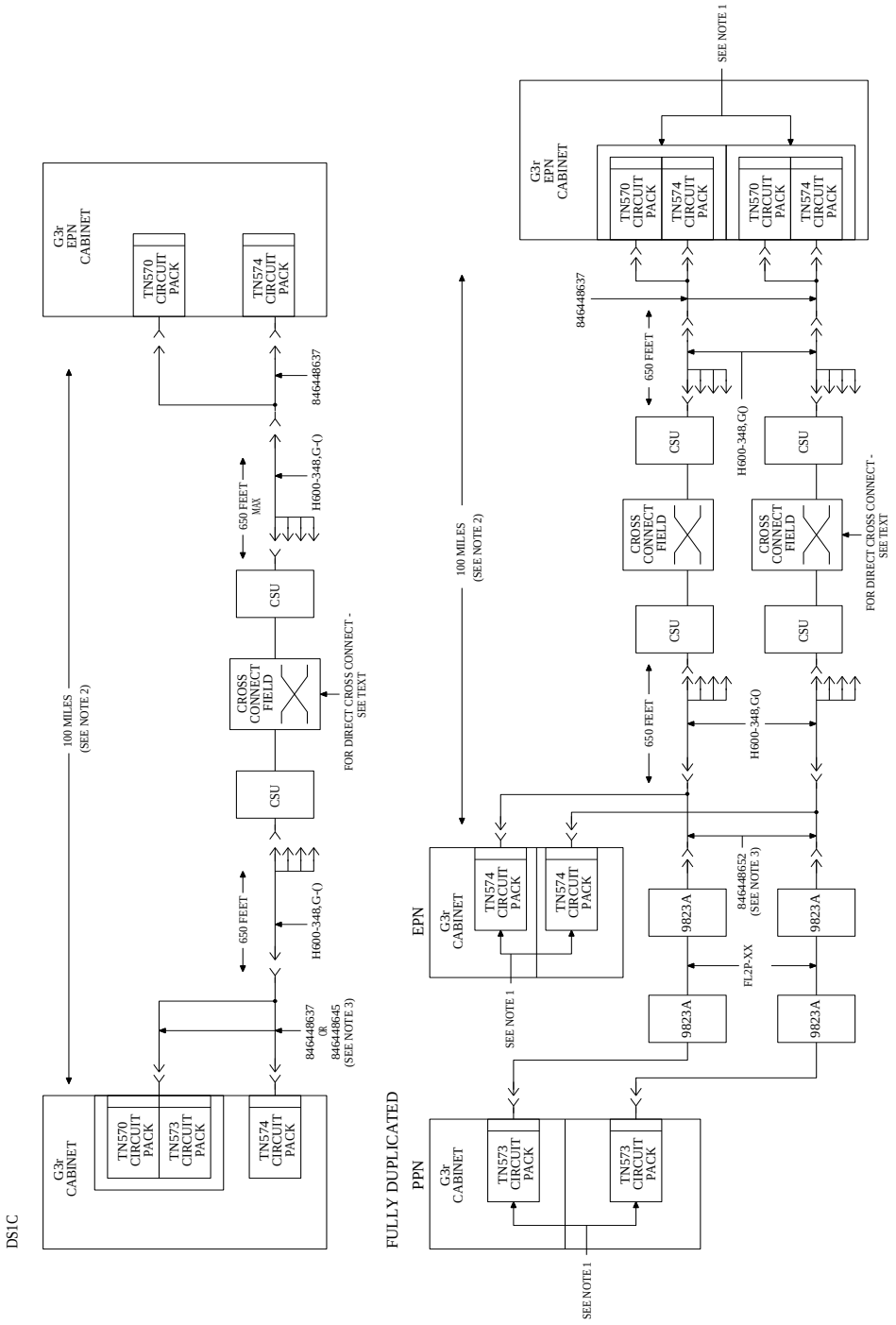

Figure 5-39. DS1 Connectivity betweem Remote PNs

Install Ground Plate(s)

NOTE:
If the system being upgraded is mounted with earthquake protection, do not install the ground plates at this time.

A ground plate is required between each cabinet (see Figure 5-40). The ground plate not only provides the ground connection between cabinets, it also stabilizes the cabinets.

1. See NOTE. Behind the cabinets, replace the upper and lower covers (leave the screws loose).

   NOTE:
   The rear covers for G3r V4 control carriers may need two detents (one for the TDM/LAN cable and another for the ICC cables). Therefore, if the G1 or G3i being upgraded to a critical-reliability G3r V4's EPN was originally an R1V3, verify that the lower rear cover of the port cabinet in position ''B'' (serving as the duplicate expansion control cabinet) has been replaced with a new cover (846307817) so that the ICC cables and the new ground plate can be properly installed between cabinets ''A'' and ''B.'' If not, replace this cover with the new cover.

2. Place the ground plate over the lower rear cover of the upper cabinet so that the four screws that attach the lower rear cover go through the four ground plate keyhole slots.
3. Slide the ground plate down over the upper rear cover of the lower cabinet so that the four screws that attach the upper rear cover go through the four lower ground plate slots.
4. Assure that the exposed portion of the TDM/LAN cable that is between the cabinets does not get pinched.
5. Tighten all screws.

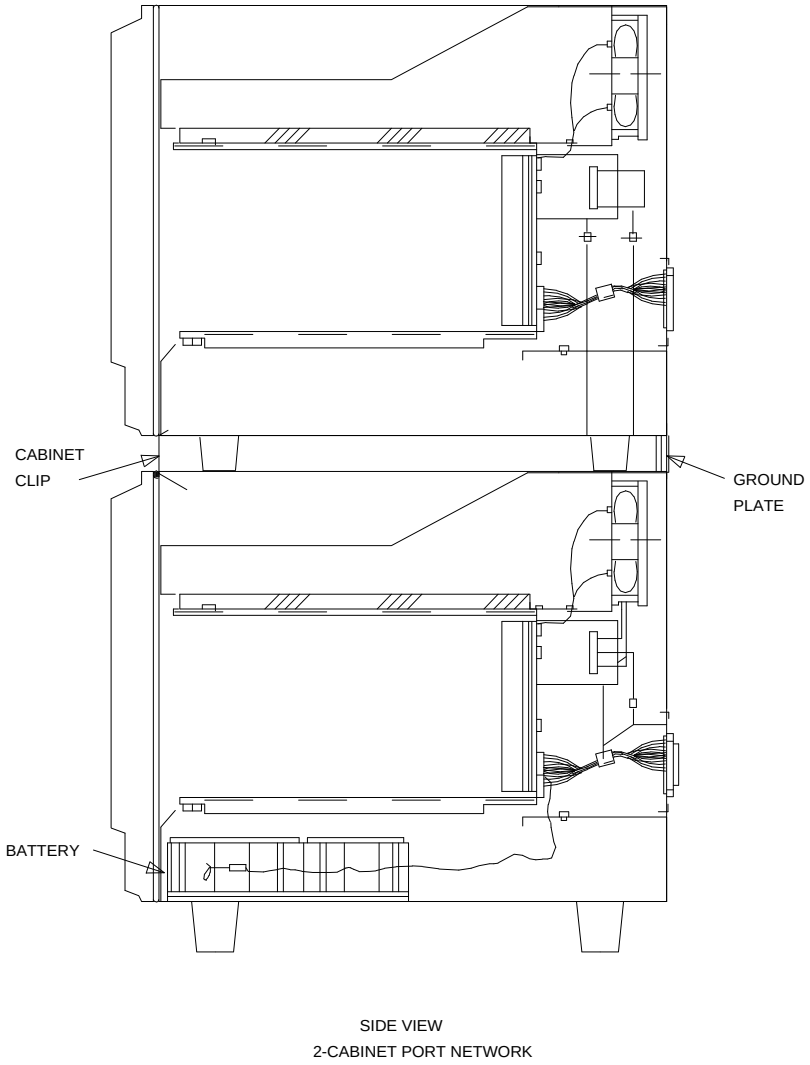

Figure 5-40. Locations of Ground Plate, Cabinet Clip, and Battery

Install Cabinet Clip(s)

NOTE:
This procedure is only used on systems without earthquake protection.

A cabinet clip, used to ground and stabilize the cabinets, is required between each cabinet.

At the front of the cabinets, install cabinet clip between the cabinets by hooking the clip into the slot of the upper cabinet and snapping the straight leg of the clip into the slot on the lower cabinet (see Figure 5-40).

Connect Power and Grounding

1. Reconnect the 6-AWG cabinet ground wire from the ground bar in the cabinet.

   NOTE:
   A screwdriver is required to loosen and tighten the bolts that secure the ground wire to the ground bar.

2. Reconnect the coupled bonding conductor.
3. Reconnect the cabinet power cords at the rear of each cabinet.

Verify Usable Circuit-Pack Vintages

Verify that every G1 or G3i circuit pack reused in the upgrade conforms to the usable vintage requirements for a G3r V4 system (see Reference Guide for Circuit-Pack Vintages and Change Notices).

Install System Access Ports

As a prerequisite for connecting various endpoints that use EIA interfaces to the G3r V4 system, install the up to eight loop-around connections for Mode 2-to-Mode 3 (and vice versa) data conversion.

From the *outgoing* perspective of the system communicating with an EIA endpoint, these loop-around connections convert Mode 3 data (circuit-switched packet data, with undefined bit rates and packet specifications) to Mode 2 data (low-speed, usually asynchronous, data at rates of 300 to 19,200 bps) by:

- Accepting Mode 3 data off the LAN bus (from the SPE) at a TN553 Packet Data Line circuit pack, where Mode 3-to-Mode 2 conversion is done
- Routing the converted data through the cross-connect field and back to a TN726B Data Line where the equivalent Mode 2 data can access the TDM bus, for subsequent routing to an EIA endpoint

The endpoints that use these EIA interfaces and, therefore, require the Mode 2-to-Mode 3 conversion include:

- DEFINITY Communications System Generic 3 Management Applications (G3-MA)
- Remote DEFINITY Communications System Generic 3 Management Terminal (G3-MT)
- Basic Call Management System (BCMS) terminal
- Call Detail Recording Unit (CDRU)/Centralized Attendant Service Plus (CAS+)
- Property Management System (PMS)
- Printers

The following figures show this loop-around configuration and how the B25A cables are cross-connected.

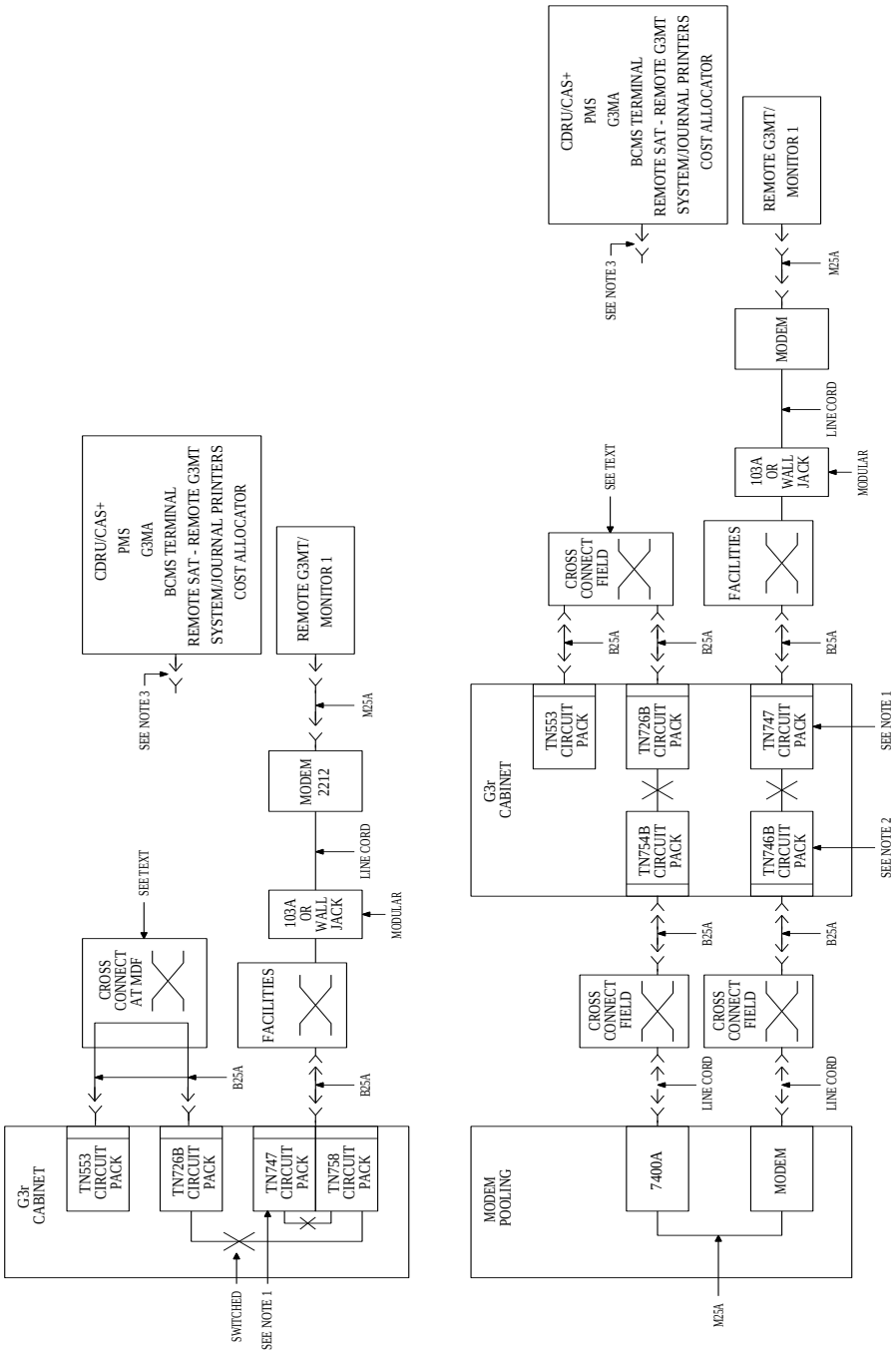

Figure 5-41. Connections: CDRU/CAS+, PMS, BCMS, Printers, G3-MA/MT

Pinouts for the TN553 and TN726B circuit packs shown cross-connected in the preceding figure are given in the table below.

Pinouts

TN553 (12 Ports)

1	26	
2	27	1
3	28	
4	29	2
5	30	
6	31	3
7	32	
8	33	4
9	34	
10	35	5
11	36	
12	37	6
13	38	
14	39	7
15	40	
16	41	8
17	42	
18	43	9
19	44	
20	45	10
21	46	
22	47	11
23	48	
24	49	12
25	50	G

TN726B (8 Ports)

1	26	Blank
2	27	
3	28	1
4	29	Blank
5	30	
6	31	2
7	32	Blank
8	33	
9	34	3
10	35	Blank
11	36	
12	37	4
13	38	Blank
14	39	
15	40	5
16	41	Blank
17	42	
18	43	6
19	44	Blank
20	45	
21	46	7
22	47	Blank
23	48	
24	49	8
25	50	Blank

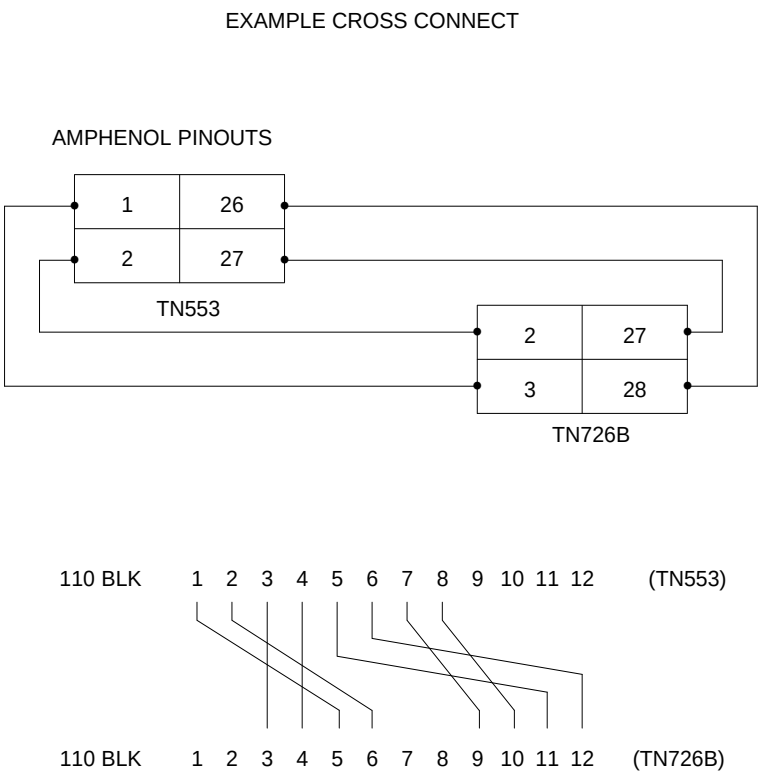

Figure 5-42. Example of Cross Connect betweem TN553 and TN726B

Reseat DEFINITY AUDIX System

See WARNING. If a DEFINITY AUDIX System resides in the system, reseat the AUDIX assembly to its backplane connectors.

WARNING:
Before inserting or removing a circuit pack from a cabinet, put on a wrist strap and attach its plug or clip to the cabinet's frame.

Remove Power-Failure Ground Strap

Remove the previously installed ground strap from the power-failure transfer unit.

Reboot the System

1. Connect the G3-MT to the connector labeled ''TERMINAL'' behind PPN control carrier ''A,'' or install the G3-MA according to the ''Set Up G3-MA'' chapter of *DEFINITY Communications System Generic 3 Management Applications — Operations*, 585-229-202.
2. Verify that the new G3r V4 system tape is inserted in the PPN cabinet.
3. Behind each EPN cabinet, set the circuit breaker to ON.
4. At the PPN power-distribution unit, set the main circuit breaker to ON.
5. The system now goes through the reset level 4 rebooting process, loading blank translations from the *disk* (not the new tape). Rebooting requires 5 to 11 minutes.
6. Enter **`reset system 4 tape`**. Press (RETURN). This command instructs the system to go through the reset level 4 rebooting process, loading the upgraded STS translations from the new *tape*. Rebooting requires 5 to 11 minutes.

   Refer to ''Initialization and Recovery'' and ''LED Interpretation'' chapters in *DEFINITY Communications System Generic 3r V4 Maintenance*, 555-230-105, Issue 3, for circuit-pack LED indications and screen displays that occur during system reboot.
7. Log in at the `login:` prompt on the G3-MT or G3-MA, and set the time to ensure that the system is booted properly.
8. If the system is high- or critical-reliability, enter **`status spe`**, and press (RETURN) to verify that the standby SPE is refreshed and that the standby disk is in service.
9. Enter **`restore disk [spe-a or both] full`**. Press (RETURN). This command instructs the system to write the upgraded STS translation information from memory to the disk(s).
10. Enter **`reset system 4`**. Press (RETURN). This command instructs the system to go through the reset level 4 rebooting process, loading the upgraded STS translations from the *disk*. Rebooting requires 5 to 11 minutes.

NOTE:
Certain forms have changed for G3r V4. Upgraded G1 or G3i translations may appear on a different form, fields may have shifted within a form, and/or the names assigned to particular fields may have changed. Refer to Table 5-1 and Table 5-2, *DEFINITY Communications System Generic 3r Transition Reference*, 555-230-636, and *DEFINITY Communications System Generic 3 V4 Implementation*, 555-230-655, and make the necessary changes.

Relabel Wall Field

If not done during the installation of new PPN, relabel the wall field with the new port-network number of the upgraded G3r V4 EPN. (The STS software upgrade assigned the next port-network number, after the highest-numbered port network in the G1 or G3i system, to the upgraded EPN.)

Close Upgraded EPN Stack without Earthquake Protection and Reconnect Cables

1. Behind each EPN cabinet's power supply, set the circuit breaker to OFF.

   NOTE:
   Powering down an EPN cabinet without powering down the PPN will set off alarms. However, these alarms should clear after power is restored to the EPN.

2. Replace all cables that were labeled and removed.
3. Install the front door on each cabinet.
4. Install the top and bottom rear covers. Be sure that the correct rear covers are installed on the new J58890N expansion control cabinet. Do not use these rear covers on the port cabinets.

Close Upgraded EPN Stack with Earthquake Mounting and Reconnect Cables

1. Behind each EPN cabinet's power supply, set the circuit breaker to OFF.

   NOTE:
   Powering down an EPN cabinet without powering down the PPN will set off alarms. However, these alarms should clear after power is restored to the EPN.

2. Replace all cables that were labeled and removed.
3. Install the upper and lower rear covers with all of the screws except for the screws that run along the top and bottom of the cabinet. Do not tighten the screws.

   NOTE:
   The rear covers for G3r V4 control carriers may need two detents (one for the TDM/LAN cable and another for the ICC cables). Therefore, if the G1 or G3i being upgraded to a critical-reliability G3r V4's EPN was originally an R1V3, verify that the lower rear cover of the port cabinet in position "B" (serving as the duplicate expansion control cabinet) has been replaced with a new cover (846307817) so that the ICC cables and the new ground plate can be properly installed between cabinets "A" and "B." If not, replace this cover with the new cover.

4. Line up the four holes in the ground plate with the four holes and install the screws, but do not tighten.
5. Line up the ground plate with the top holes of the upper rear cover of the lower cabinet. Install the four screws, but do not tighten.
6. At the front of the cabinet, line up the earthquake front plate with the holes at the top and bottom of the cabinet (see Figure 5-43). Install the eight screws, but do not tighten.
7. Tighten all screws.
8. Repeat Steps 3 through 7 for the remaining cabinets.
9. Install the front door on each cabinet.

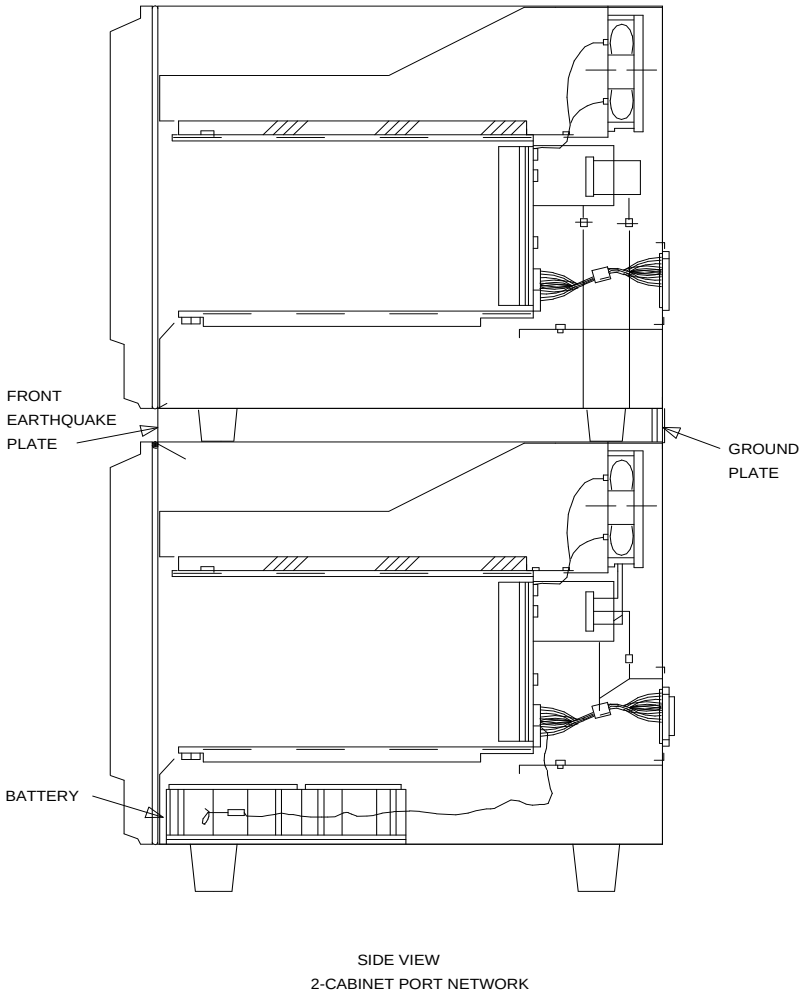

Figure 5-43. Locations of Ground Plate, Earthquake Front Plate, and Battery

Install Cable Clamps

Behind the cabinets, using screws provided, install two cable clamps on each ground plate (see Figure 5-44). These clamps are used to hold the port cables.

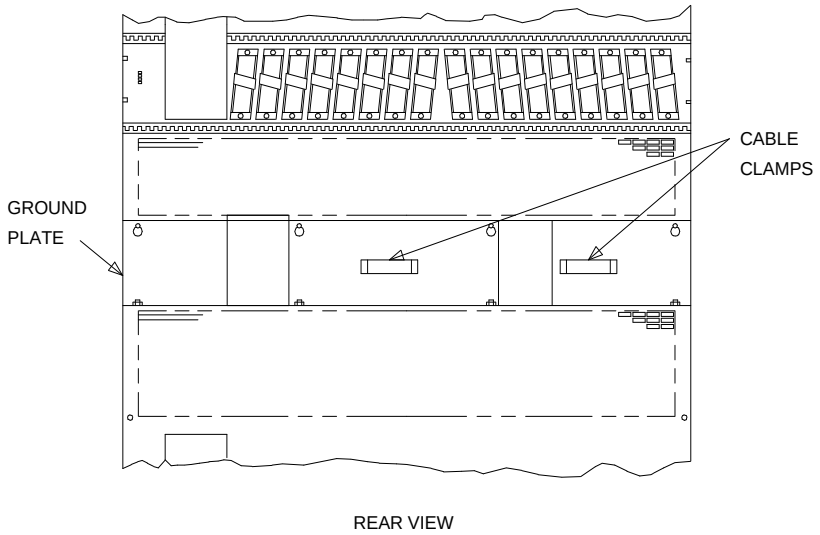

Figure 5-44. Locations of Ground Plate and Cable Clamps on Single-Carrier Cabinet

Power Up the EPN Cabinets

1. Behind each EPN cabinet's power supply, set the circuit breaker to ON.

   After about 40 seconds, EPN power and PPN/EPN communications return.

2. After power returns to the EPN and all trouble is cleared, verify that the EMERGENCY TRANSFER CONTROL switch is set to AUTO. This restores the system to the normal mode.

Retranslate Port Circuits

If port circuit packs in the G1 or G3i control cabinet were relocated in order to:

- Use a TN748B to replace the tone detector circuits on a TN756
- Put a critical port circuit pack, requiring longer nominal battery holdover (a DS1 or an Announcement circuit pack), in a port slot
- Put a TN570 Expansion Interface in port slot ‘‘1’’
- Put a TN570 Expansion Interface in port slot ‘‘2’’ (for a second EPN)
- Put a TN755 power supply in port slots ‘‘16’’ and ‘‘17’’

verify that they were retranslated during the off-site software upgrade. If not, they must be retranslated now. Refer to *DEFINITY Communications System Generic 3 V4 Implementation*, 555-230-655, for instructions on performing the retranslations.

Rerecord Announcements

The off-site STS translation upgrade did not preserve the contents of recorded announcements. Therefore, if a TN750/B Annoucement circuit pack resides in the system, any announcements that were stored on the circuit pack must be rerecorded.

Run Acceptance Tests

Refer to Chapter 11 of *DEFINITY Communications System Generic 1 and Generic 3 Installation and Test*, 555-230-104, Issue 5, and perform the appropriate tests.

Register System as G3r V4

Get the serial number of the new G3r V4 PPN, and call the INADS Database Administrator at the Technical Service Center (1-800-248-1111) to register the upgraded system as a G3r V4.

Return Replaced G1 or G3i Equipment

The G1 or G3i equipment replaced, during the upgrade to G3r V4, should be returned to AT&T according to the requirements outlined in:

BCS/Material Logistics, MSL/Attended Stocking Locations

Methods and Procedures for Basic Material Returns

The replaced G1 or G3i equipment includes:

- G1 or G3i control cabinet (J58890L), control circuit packs, and 982LS CURL
- If G1 or G3i system was duplicated, G1 or G3i duplicated control cabinet (J58890M) and control circuit packs
- G1 or G3i ICC cables (H600-182 G1)
- G1 or G3i tape cartridges
- If G1 or G3i contained an EPN, TN776 expansion interfaces
- Lower rear cover for expansion control cabinet
- 4-series lightwave transceivers

Multicarrier G2 Universal Module to G3r V4 EPN

6

This chapter provides the information necessary to upgrade a DEFINITY® G2 universal module to a multicarrier EPN of a DEFINITY G3r V4 system. The hardware and software involved in the upgrades and the upgrade procedures are also provided.

CAUTION:
Be careful to find the right chapter for your upgrade. Using the software- and sometimes the hardware-upgrade PEC on the customer's order, refer to Table 1 in "About This Document" for the correct chapter.

The following processes are required for a G2 to G3r V4 upgrade:

- Upgrading the hardware

  This involves adding a new multicarrier PPN cabinet, replacing the first module control carrier (in each universal module) with an expansion control carrier, replacing each duplicated module control carrier with a port carrier, and replacing and adding circuit packs

- Replacing the software tape
- Upgrading the software

  This involves saving translations, acquiring a Translations Recovery, Additions, and Conversions System (TRACS) report, and extensively reentering system translations

- Testing the upgraded system to verify proper operation

G3r V4 features and functions are listed in the *DEFINITY Communications System Generic 3 Feature Description*, 555-230-204. *DEFINITY Communication System Generic 3 V4 Implementation*, 555-230-655, provides the commands, procedures, and forms required to initialize and administer the G3r V4.

Considerations

Service Interruption

The upgrade process requires a service interruption. This service interruption must be closely coordinated with the customer and the local account team.

Communication between Equipment Rooms

For an upgrade where some of the equipment resides at a remote location, the upgrade activity will be much easier if temporary communications are established between the equipment rooms.

Contact Network Technicians

The technician for each public and private network accessed by the system must be contacted before the upgrade begins. Otherwise, if these technicians are not aware of the service interruption caused by the upgrade, it is possible that network-access trunk facilities will be busied out at the far end.

Relocation of Port Circuit Packs

A G2 universal-module upgrade to G3r V4 *does not* cause port circuit packs, from the G2 universal module, to be moved and manually retranslated. This is because a G2 universal module is always upgraded to an EPN. So, during the universal-module upgrade to a G3r V4 EPN, a G3r V4 expansion control carrier (with 18 available port slots) always replaces the G2 module-control carrier (with no port slots), providing a net gain of 18 port slots.

Usable Circuit-Pack Vintages

Every circuit pack used in the upgraded G3r V4 system must conform to the minimum usable vintage requirements for G3r V4. Those circuit packs shipped in the new G3r V4 PPN or shipped loose with the new EPN equipment should always meet the usable vintage specifications. In addition, at a presale site inspection, the Quality Protection Plan Change Notice (QPPCN) process must check the vintages of every G2 circuit pack (including any CFY1 current limiters) that will be reused in the upgraded G3r V4 and, if necessary, replace those circuit packs that have unusable vintages. Refer to *Technical Monthly*, Reference Guide for Circuit-Pack Vintages and Change Notices, for current information about usable vintages in a G3r V4 system.

Site Inspections

For the purposes of a G3r V4 upgrade, most G2 systems are already equipped with the correct TDM/LAN cables (WP-91716 L6 and L7) and with the correct lightwave transceivers (9823-A or -B). However, some G2 systems contain earlier versions of these components, and (based on a site inspection) these older components must be replaced.

The two earlier versions of the TDM/LAN cable included the WP-91112 (L1 and L2) and the WP-91716 (L1 and L2). Both of these versions, had white labels. In contrast, the correct cables (WP-91716 L6 and L7) have blue labels. If a QPPCN site inspection reveals that the older cables reside in the system, the older cables are replaced under the QPPCN process.

See NOTE. The earlier versions of lightwave transceivers included the 4-series transceivers (that is, 4A through 4F). These transceivers supported fiber connections up to 7,000 feet apart; whereas the 9823-A supports connections up to 5,000 feet, and the 9823-B supports connections up to 25,000 feet. If the site inspection reveals that the older transceivers reside in the system, the correct transceivers are ordered and shipped according to a separate PEC.

NOTE:
The 9823-A transceiver is *not* a direct replacement for the 4-series transceiver (since a pair of 9823-A transceivers *cannot* replace a pair of 4-series transceivers supporting a connection of between 5,000 and 7,000 feet).

Power and Grounding

The new multicarrier PPN cabinet or any EPN cabinet added for the upgrade can be either AC- or DC-powered. If an added cabinet is powered differently from the existing cabinets, the existing cabinets do not have to be converted since mixed power configurations are allowed. However, the system's power and grounding must be modified so that the AC-powered cabinets are grounded to the same single-point ground bar as the DC-powered cabinets (see Figure 6-1).

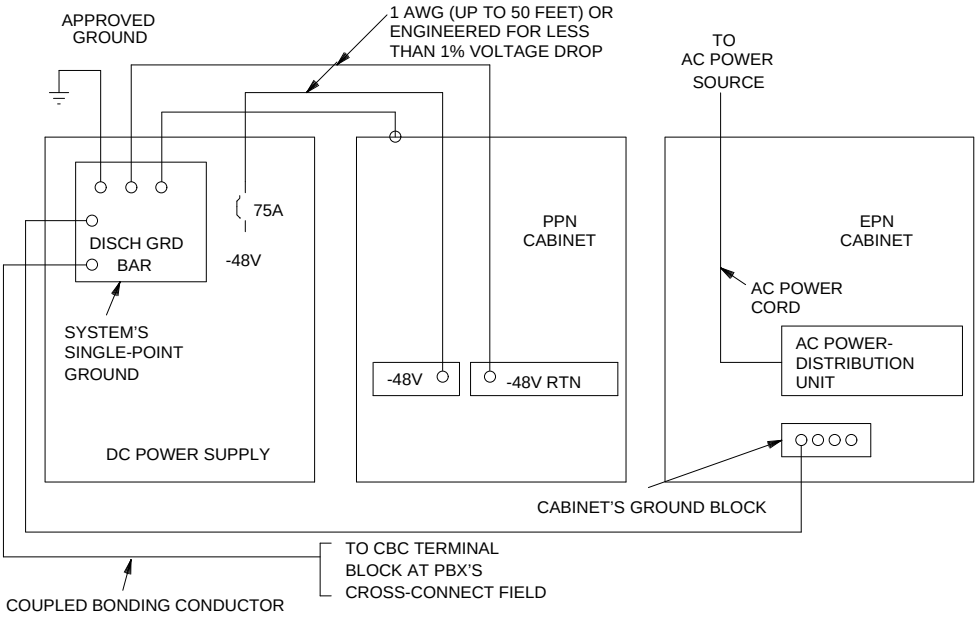

Figure 6-1. Typical Power and Grounding Arrangement for a Mixed AC/DC-Powered Multicabinet Configuration

See NOTE. If a new AC-powered cabinet is to be added, a separate AC receptacle is provided to support the new cabinet. This AC receptacle must not be shared with any other equipment and must not be controlled by a wall switch. For the convenience and safety of equipment-room personnel, the receptacle should not be located under the cross-connect field.

NOTE:
In contrast to the AC power that is likely to be currently available in a G2 equipment room, the new AC-powered PPN added for a G3r V4 upgrade uses 4-wire, 30A, 208 VAC power. Whereas, G2 traditional cabinets used 4-wire, 20A, 208 VAC power and G2 universal cabinets used 3-wire, 30A, 208 VAC power.

If a new DC-powered cabinet is to be added, refer to *DEFINITY Communications System Generic 1 and Generic 3 Installation and Test*, 555-230-104, Issue 5, for DC power and grounding requirements.

116A Isolator

Each G3-MT connected to a DC-powered cabinet, via the asynchronous Electronic Industries Association (EIA) RS-232 interface (behind a PPN control carrier or behind an EPN expansion control carrier), requires a 116A isolator. The isolator is inserted at the RS-232 interface between the G3-MT and the interface connector to isolate grounding between the system and external adjuncts.

Power-Failure Stations

During routine system operation, the ground for the power-failure stations is derived from the system's auxiliary cable. This ground will be disconnected during the upgrade, thus disabling the power-failure stations. Therefore, a ground strap will have to be run to the power-failure transfer panel. This strap should be connected shortly after power is removed and then disconnected just before power is restored to the upgraded system.

To minimize downtime during the G3r V4 upgrade, power-failure transfer equipment should be tested and, if need be, repaired before the hardware upgrade begins.

Software

The G3r V4 software and translations will be saved on the TN1656 Tape Drive circuit pack. This tape format is not compatible with the format of the G2 disk/tape system (DTS).

If the customer plans to emulate existing G2 translations in the upgraded G3r V4, then these translations must be copied to a spare tape and sent to Software Technical Support (STS) so that reports of the current G2 translations and a G3-MA diskette with basic station translations can be generated. After STS receives the spare tape, this process takes one week. STS must return the G2 reports and the diskette to the Project Manager before the upgrade can begin. For each G2 processor, two tapes (one system tape and one backup tape) must always be retained on site with the G2 system.

After the reports arrive, many features will require special attention because of feature differences, form changes, and potential naming conflicts in the upgrade process.

During the upgrade, the Software Specialist should implement G3r V4 translations that are appropriate for the customer's needs. For information to make the required changes, refer to:

- *DEFINITY Communications System Generic 3r Transition Reference*, 555-230-636
- *DEFINITY Communications System Generic 3 Feature Description*, 555-230-204
- *DEFINITY Communications System Generic 3 V4 Implementation*, 555-230-655

Alarm Connection

The D6 connector on G2 systems had 31 alarm-monitor appearances (Unit 1 to Unit 31) for external equipment. Whereas, the AUXILIARY connector on a DEFINITY G3r V4 PPN only has appearances for 1M (major alarm) and 1m (minor alarm). If the G2 system being upgraded used more than one major or more than one minor alarm-monitor appearance, these extra appearances will either have to be distributed to the AUXILIARY connector on an upgraded G3r V4 EPN, or they must be accommodated in another manner, such as paralleling them on the above connections.

The following tables correlate wall-field terminal numbers, connector pin numbers, lead colors, and lead designations for the G2 D6 and G3r V4 AUXILIARY connectors.

Table 6-1. Pinouts for D6 Connector on G2 System

Terminal #	Pin #	Color	Desig.	Terminal #	Pin #	Color	Desig.
1	26	W-BL	UNIT20	2	01	BL-W	UNIT19
3	27	W-O	UNIT22	4	02	O-W	UNIT21
5	28	W-G	UNIT24	6	03	G-W	UNIT23
7	29	W-BR		8	04	BR-W	UNIT25
9	30	W-S	UNIT27	10	05	S-W	UNIT26
11	31	R-BL	UNIT29	12	06	BL-R	UNIT28
13	32	R-O	UNIT31	14	07	O-R	UNIT30
15	33	R-G	AUXCTMP	16	08	G-R	UNIT32
17	34	R-BR	EXTEQMN	18	09	BR-R	EXTEQMJ
19	35	R-S	AUXCRCT	20	10	S-R	AUXCHO
21	36	BK-BL	AUXCCB	22	11	BL-BK	AUXCFRQ
23	37	BK-O	AUXCFAN	24	12	O-BK	
25	38	BK-G	EXTPRMJ	26	13	G-BK	EXTPRMN
27	39	BK-BR	UNIT2	28	14	BR-BK	UNIT1
29	40	BK-S	UNIT4	30	15	S-BK	UNIT3
31	41	Y-BL	UNIT6	32	16	BL-Y	UNIT5
33	42	Y-O	UNIT8	34	17	O-Y	UNIT7
35	43	Y-G	UNIT10	36	18	G-Y	UNIT9
37	44	Y-BR		38	19	BR-Y	UNIT11
39	45	Y-S	UNIT13	40	20	S-Y	UNIT12
41	46	V-BL	UNIT15	42	21	BL-V	UNIT14
43	47	V-O	UNIT17	44	22	O-V	UNIT16
45	48	V-G		46	23	G-V	UNIT18
47	49	V-BR	RING0	48	24	BR-V	TIP0
49	50	V-S	RING1	50	25	S-V	TIP1

Table 6-2. Pinouts for Auxiliary Connector on G3r V4 System

Terminal #	Pin #	Color	Desig.	Terminal #	Pin #	Color	Desig.
1	26	W-BL	AUXMJ	2	01	BL-W	GRD
3	27	W-O	AUXMN	4	02	O-W	GRD
5	28	W-G		6	03	G-W	GRD
7	29	W-BR		8	04	BR-W	GRD
9	30	W-S		10	05	S-W	GRD
11	31	R-BL		12	06	BL-R	GRD
13	32	R-O		14	07	O-R	GRD
15	33	R-G		16	08	G-R	
17	34	R-BR		18	09	BR-R	
19	35	R-S		20	10	S-R	
21	36	BK-BL	XFER48	22	11	BL-BK	GRD
23	37	BK-O	XFER48	24	12	O-BK	GRD
25	38	BK-G	XFER48	26	13	G-BK	GRD
27	39	BK-BR	XFER48	28	14	BR-BK	GRD
29	40	BK-S	XFER48	30	15	S-BK	GRD
31	41	Y-BL	XFER48	32	16	BL-Y	GRD
33	42	Y-O	XFER48	34	17	O-Y	GRD
35	43	Y-G		36	18	G-Y	
37	44	Y-BR	GRD	38	19	BR-Y	ACC48A
39	45	Y-S	GRD	40	20	S-Y	ACC48B
41	46	V-BL	GRD	42	21	BL-V	ACC48C
43	47	V-O		44	22	O-V	
45	48	V-G	EXT_ALM	46	23	G-V	EXT_ALM_RT
47	49	V-BR		48	24	BR-V	
49	50	V-S	INADS TIP	50	25	S-V	INADS RING

Software-Translation Upgrade

The G3r V4 software and translations will be saved on the TN1656 Tape Drive circuit pack. This tape format is not compatible with the format of the G2 disk/tape system (DTS).

During an upgrade from a G2 to a G3r V4, STS generates TRACS reports (that show the current software translations) and G3-MA diskettes (with basic station translations) in the G2 system and sends the reports to the Project Manager. To enable these activities, replace the system tape with a spare G2 tape. (Spare G2 tape cartridges can be acquired from the QPPCN before the upgrade.) Then, copy the current G2 translations to the spare tape, and overnight mail this tape to STS. Also, put the original system tape back into the system.

If possible, the customer should put a freeze on any new translations while the spare tape is being converted. If not, be sure that the customer's switch administrator keeps detailed records of any translation changes made during that interval. These records will supplement the TRACS reports to facilitate the transition from G2 to G3r V4 software translations.

The TRACS reports with the current G2 translations must be on-site before the upgrade begins.

Save Translations

1. Log in at the Manager II on the G2.
2. Enter **`rtx`** (run tape, execute). Press [RETURN]. This command instructs the system to write all translation information from memory to the tape.
3. Remove the system tape, install the backup tape, and wait for the tape to retension.
4. Enter **`rtx`** (run tape, execute). Press [RETURN].

Make Source Tape for TRACS Report

A spare G2 tape must be acquired from the QPPCN before performing the following steps. For each processor, there must always be two tapes on site with the G2 system. Do not send a system or backup tape to STS.

After performing the previous procedures, copy the G2 translations to the spare tape that will be used to make the TRACS report. Perform the following procedures:

1. Remove the backup tape, install the spare tape, and wait for the tape to retension.
2. Enter **rtx** (run tape, execute). Press (RETURN). This command instructs the system to write all translation information from memory to the tape.
3. Remove the source tape.
4. Insert the system tape.

The tape removed in Step 3 should be mailed (with next-day delivery) to STS for use in making the G2 TRACS report.

System Upgrades

There are many configurations of DEFINITY G2s in the field. In terms of both hardware and software, each system can have a unique configuration. However, to simplify G3r V4 upgrades:

- The existing common control is always replaced by a PPN
- Except for G2 systems with two modules, an existing time-multiplexed switch is always replaced by one or two switched nodes
- Existing traditional modules are replaced by an EPNs[1]
- Existing universal modules are upgraded to EPNs

A new multicarrier cabinet would then always serve as the PPN and also, if necessary, as the switched node. If a G2 universal module is upgraded to a G3r V4 EPN, hardware changes (including carrier replacement) are required.

This section gives a sequential list of the steps required to upgrade the system.

1. There is not necessarily a one-to-one correspondence between G3r V4 EPNs and G2 modules. With careful hardware and traffic engineering, an upgraded G3r V4 can have fewer EPNs than the G2 has modules.

Standard-Reliability G2 to Standard-Reliability G3r V4

Refer to *DEFINITY Communications System Generic 1 and Generic 3 Installation and Test*, 555-230-104, Issue 5, to install the new PPN cabinet.

If traditional modules are being replaced by EPNs, refer to *DEFINITY Communications System Generic 1 and Generic 3 Installation and Test*, 555-230-104, Issue 5, to install the new EPNs.

Upgrade Cabinets

An existing universal-module cabinet is always upgraded to an EPN. Upgrade the cabinets using the following procedures.

A standard-reliability G2 universal module is upgraded to a standard-reliability G3r V4 EPN by:

- Removing the module control carrier in position ‘‘A’’
- Installing the J58890AF expansion control carrier in position ‘‘A’’
- Adding the G3r V4 circuit packs
- Restructuring the port circuits as required

Prerequisite Hardware

The equipment in Table 6-3 *must* be on-site before the upgrade begins. Ensure that the tapes are G3r V4 tapes.

To place a claim for missing equipment, as part of the Streamlined Implementation process, call ‘‘1-800-772-5409,’’ and respond to the call prompter.

Table 6-3. Required Hardware

Equipment	Description	Quantity
PEC 6300-07X[U]	Processor Port Network	1
J58890AF	Expansion Control Carrier	1
106647985	TN775B Maintenance	1
103281788	TN570 Expansion Interface	w/o CSS: 2 or 6 (Note 1) w/CSS: 1 per port network
103281812	TN573 Switched Node Interface	w/CSS: 1 per port network
J58890TF	Tape Cartridge	2
63300A	FL2P-P-XX Fiber Cable	w/o CSS: 1 or 3 (Note 2) w/CSS: 1 per EPN
H600-278 G2	EI-to-SNI Metallic Cable	w/CSS: 1
106455348 or 106455363	9823-A Lightwave Transceiver 9823-B Lightwave Transceiver	w/o CSS: 2 or 6 (Note 3) w/CSS: 2 per EPN w/o CSS: 2 or 6 (Note 3) w/CSS: 2 per EPN

Notes:

1. Depending on the number of G3r V4 EPNs. Two are required for a standard-reliability system with two port networks; six with three port networks. Either one or four TN570s are shipped loose with the EPN equipment. The factory has installed either one or two TN570s in the new PPN.
2. Depending on the number of G3r V4 EPNs. Two or six are required if the PPN and EPN(s) are remotely located. Assuming acceptable lengths, the fiber that previously connected an upgraded G2 universal module (*not* a traditional module) to the G2 TMS has the correct transceiver connectors and, therefore, can be reused.
3. One pair for each fiber connection. For each connection, either one 9823-type lightwave transceiver is installed in an EPN and one in the PPN. A 9823-type transceiver can be reused from each upgraded G2 universal module. Additional 9823-type transceivers, ordered separately, are also shipped loose with the EPN equipment.

Required Tools

The following tools and items may be required during the upgrade:

- High-intensity flashlight or AC drop light
- 3/8-inch flat-blade screwdriver with a 10-inch shank (minimum)
- 5/16-inch and 1/4-inch sockets with a ratchet and 10-inch extension
- Power screwdriver (optional)
- Long-nose pliers to disconnect grounding straps and straighten backplane pins
- Static-proof or original circuit-pack packaging for transporting circuit packs
- Labels for identifying the port circuit packs and cables attached to the rear of cabinets
- Receptacle for holding approximately 100 self-tapping screws
- 12 spare #12 and #10 self-tapping screws
- 4 spare carrier grounding straps
- Authorized wrist grounding strap
- Repair kit for backplane pins (KS-22876 L2 or equivalent)
- One copy of each of the following manuals:
  - *DEFINITY Communications System Generic 3r V4 Maintenance*, 555-230-105, Issue 4
  - *DEFINITY Communications System Generic 3 V4 Implementation*, 555-230-655

Preventive Maintenance

During the G3r V4 upgrade, follow routine preventive maintenance procedures on the system to be upgraded. For information about the procedures and necessary equipment, refer to the “Preventive Maintenance’’ section in *DEFINITY Communications System Generic 3r V4 Maintenance*, 555-230-105, Issue 4.

Verify System Status

Before proceeding, the system should be examined for alarms, and every problem should be corrected. The system must be alarm-free.

Label Cables

To make reconnecting the cables simpler and more reliable, label both ends of the connector cables associated with the carrier to be removed (if not already labeled).

Power Down G2 System

1. At the common control's power-distribution unit, set the main circuit breaker to OFF.
2. At the universal module's power-distribution unit, set the main circuit breaker to OFF.

Install Power-Failure Transfer Ground Strap

CAUTION:
To avoid contaminating single-point ground, do not connect the ground strap while the system is powered up.

1. Connect a strap's lead either to pin 49 of the connecting block or to pin 49 of the CAP (cable access panel) associated with the power-failure transfer panel.
2. Route the other lead to an approved ground source.
3. Connect the lead to the approved ground source.

Remove Doors and Panels and Disconnect Cables

1. Remove the front door from the cabinet (if desired).
2. With the cable retainer in front of you and the part number visible (4B or 4C), locate the slot that is almost vertical. (This slot is adjacent to the part number.) Insert a flat-blade screwdriver with a wide blade (1/4-inch recommended) into the slot, and twist the screwdriver. The retainer will snap open easily so that the cable can be removed.
3. At the cabinet, disconnect previously labeled cables associated with the carrier to be removed.
4. Behind a ''DEFINITY style'' cabinet, remove the back doors from the cabinet.
5. Behind a previously upgraded cabinet, remove all of the back panels. (Two different types of screws hold the back panels to the cabinet. The #10 screws can be removed with a screwdriver or a 1/4-inch socket. The #12 screws can be removed with a screwdriver or a 5/16-inch socket.)

Remove Circuit Packs from Module Control Carrier A

1. To ensure that power units in the ‘‘A’’ carrier are properly replaced, label each power unit with its slot number.
2. Disconnect the power cords from the power units in the ‘‘A’’ carrier.
3. See WARNING. Remove all circuit packs and power units from carrier ‘‘A.’’ Store the circuit packs in the static-proof packaging.

   WARNING:
   Before inserting or removing a circuit pack from a cabinet, put on a wrist strap and attach its plug or clip to the cabinet’s frame.

4. Remove the circuit-pack blanks from slots that do not contain circuit packs.
5. Remove the front trim plate from the ‘‘A’’ carrier by pulling straight off.

Remove CURL from Module Control Carrier A

See NOTES. Remove the CFY1 current limiter (CURL) from the pin-field block marked ‘‘CURL’’ on the ‘‘A’’ carrier. The CURL is reused in the G3r V4 EPN.

NOTE:
Note the position of the components on the left side of the CURL.

NOTE:
Verify the CURL meets the minimum usable vintage requirements.

Remove Module Control Carrier A

1. See CAUTION and NOTE. Disconnect one end of the TDM/LAN cable (between the ‘‘A’’ and ‘‘C’’ carriers) from the ‘‘A’’ carrier (see Figure 6-2).
2. See CAUTION and NOTE. Disconnect one end of the TDM/LAN cable (between the ‘‘A’’ and ‘‘D’’ carriers) from the ‘‘A’’ carrier.

   CAUTION:
   When removing the TDM/LAN cables from a previously upgraded carrier, be careful that none of the short pieces of shrink tubing come off the four corner pins of the pin-field block. Otherwise, when the new equipment is connected, -48 volts could short to ground.

   NOTE:
   Note the position of the cable before disconnecting the TDM/LAN cables.

3. Disconnect one end of the eight ground straps (between the ‘‘A’’ and ‘‘C’’ carriers) from the ‘‘A’’ carrier (see Figure 6-3). These straps will be reconnected to the new ‘‘A’’ carrier.
4. Disconnect one end of the eight ground straps (between the ‘‘A’’ and ‘‘D’’ carriers) from the ‘‘A’’ carrier (see Figure 6-3). These straps will be reconnected to the new ‘‘A’’ carrier.
5. Disconnect the ‘‘P1’’ (small 9-pin) connector and the ‘‘P2’’ (large 38-pin) connector from the ‘‘A’’ carrier (see Figure 6-4). Move the cables into a position where they will not interfere with removing the carrier.
6. Remove the fan trim plate by pulling straight off.
7. Clean or replace the air filter (403326820) if necessary.
8. In front of carrier, remove the four screws (top two first) holding the ‘‘A’’ carrier to the cabinet frame. Use a long-handle screwdriver or 5/16-inch socket with a 10-inch extension.
9. Behind the carrier in a ‘‘DEFINITY style’’ cabinet, remove the two screws holding the ‘‘A’’ carrier’s rear connector panel to the cabinet frame.
10. See CAUTION. Slide the carrier forward 1 to 2 inches; then, from the back, be sure that no cables or wiring harnesses are caught on the cabinet/carrier framework.

    CAUTION:
    Cables and wiring harnesses can be damaged if they catch on the framework and if too much pressure is applied in removing the carrier.

11. Remove the carrier by sliding it out the front of the cabinet.

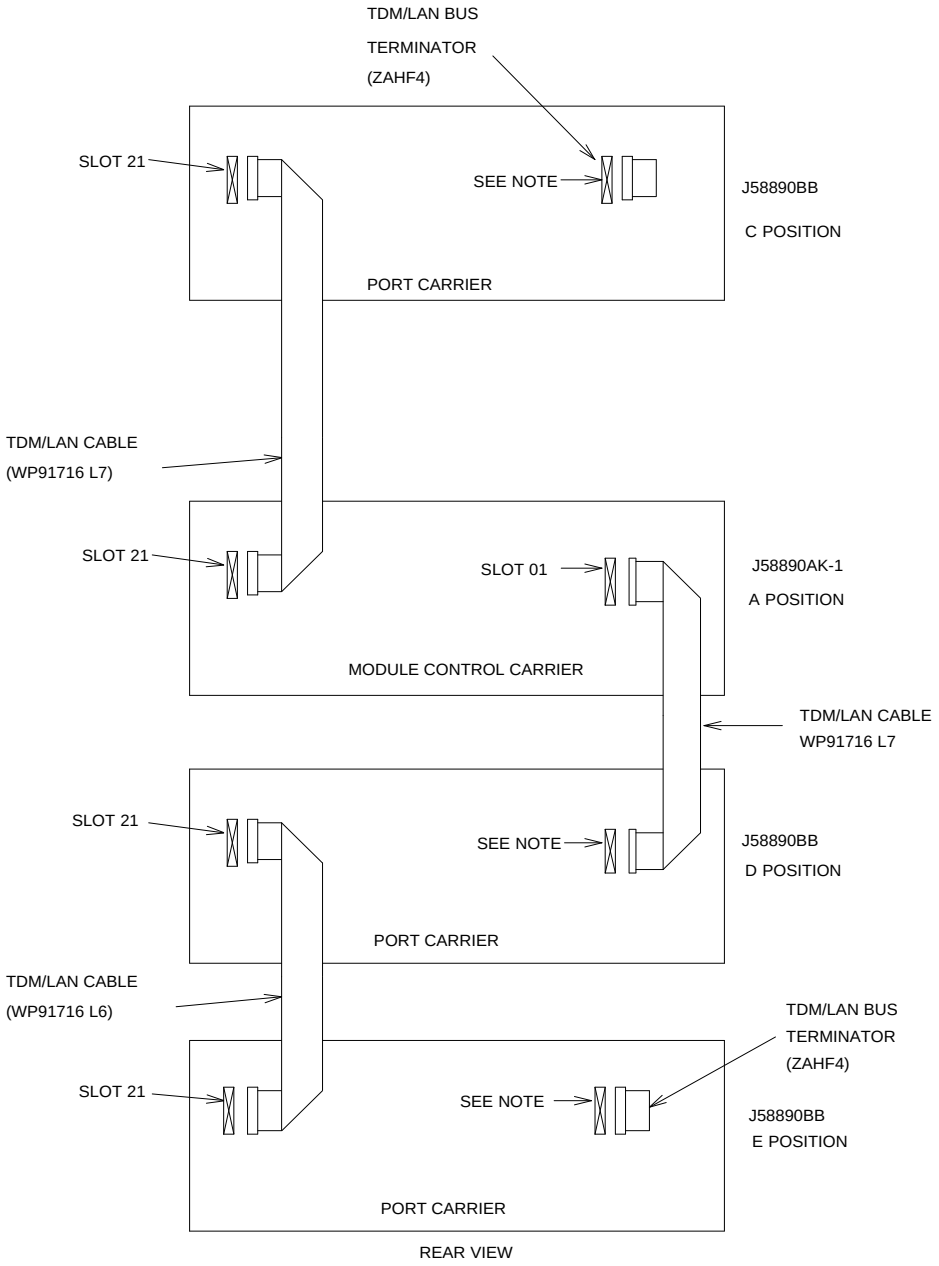

NOTE:
ON PORT CARRIER J58890BB-1, CONNECT THE TDM/LAN CABLE OR TDM/LAN TERMINATOR TO SLOT 02. ON PORT CARRIERS J58890BB-2 AND -3, CONNECT THE TDM/LAN CABLES TO SLOT 01.

Figure 6-2. TDM/LAN Connections for Standard-Reliability G2 Universal Module

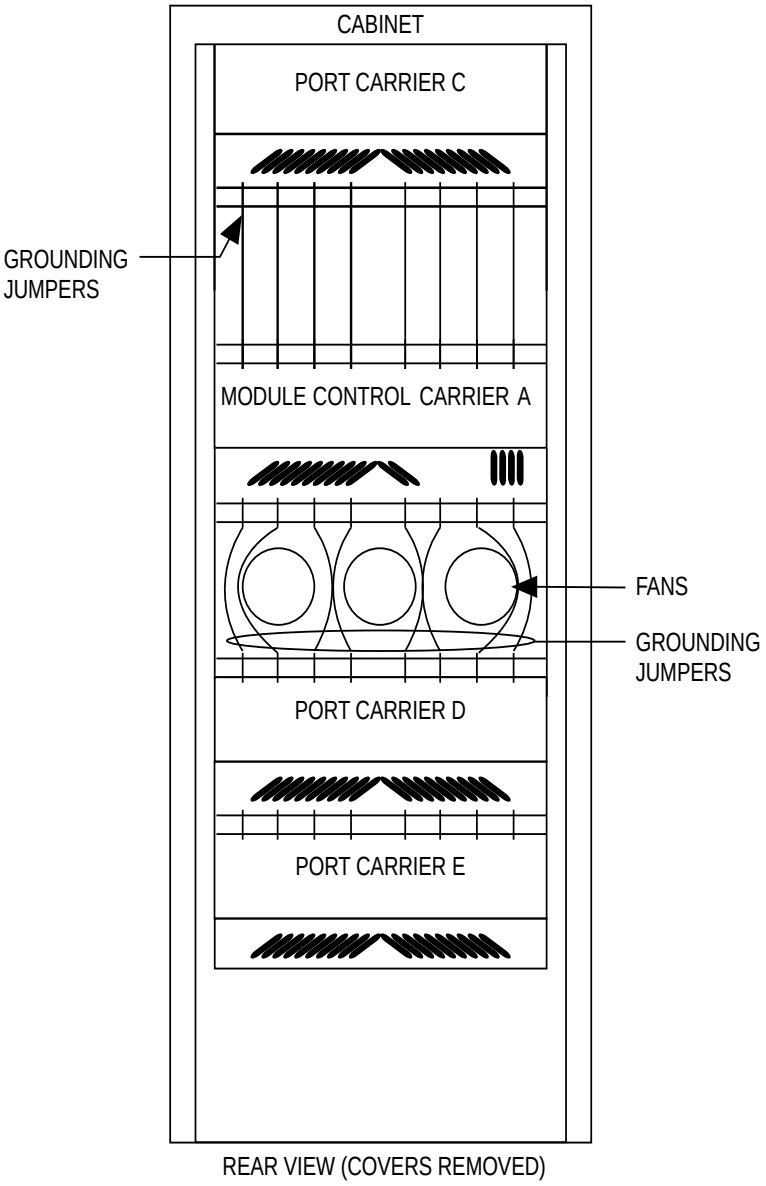

Figure 6-3. Locations of Grounding Jumpers

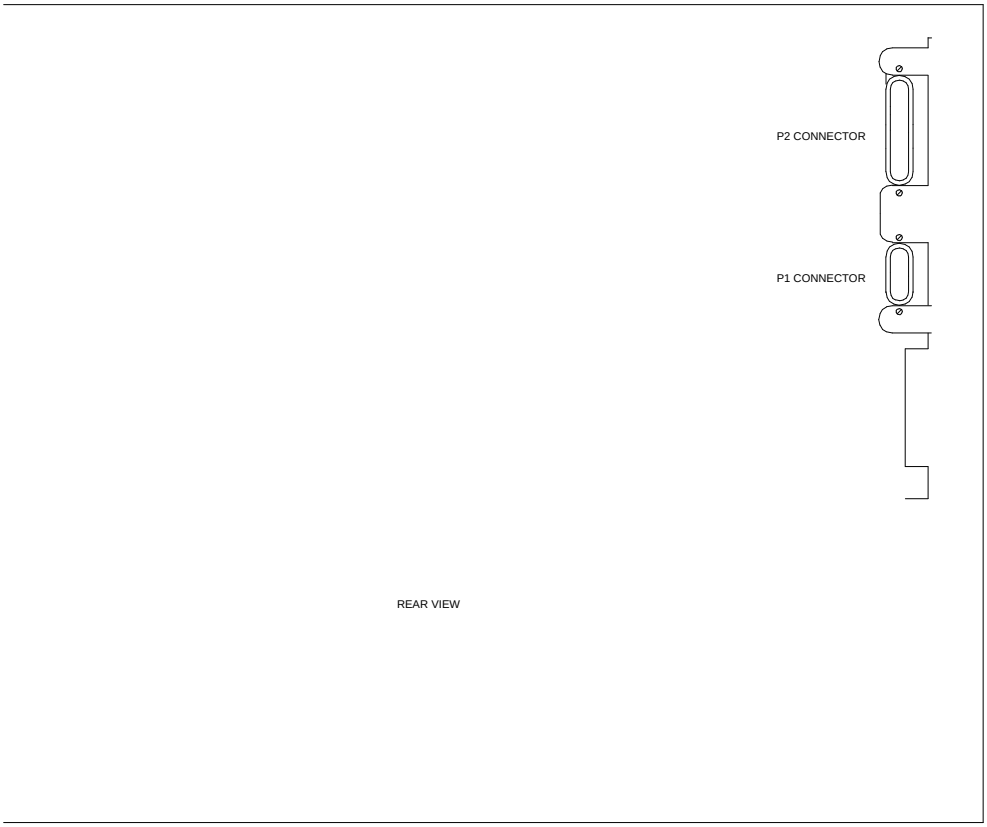

Figure 6-4. Location of P1 and P2 Connectors

Prepare New Expansion Control Carrier A

1. Visually inspect the new carrier for any damage. Verify that the backplane pins are not bent.
2. Place the expansion control carrier on the floor so that the rear of the carrier faces up.
3. Install the CFY1 current limiter (CURL) on the ‘‘A’’ carrier to the pin-field block marked ‘‘CURL.’’ The CURL is inserted with the components on the left side as viewed from the rear.
4. At the rear connector panel, determine which connectors will have a cable attached, and install a 4B cable retainer on each of these connectors.

Install New Expansion Control Carrier A

1. Install the J58890AF expansion control carrier in position ‘‘A’’ by lining up the plastic alignment tips on the top rear of the carrier with the screw holes in the cabinet. These alignment tips will support the carrier while the screws are being replaced. Ensure that the power cords are properly placed in the slots at the sides of the carrier.
2. See CAUTION. Fasten the carrier into position with four self-tapping screws saved from the removal of the old carrier.

   CAUTION:
   Carefully realign the threads on the self-tapping screws by turning them clockwise a turn or two before tightening them to avoid stripping the threads out of the framework.

3. Behind the carrier in a ‘‘DEFINITY style’’ cabinet, replace the two screws saved from the removal of the old carrier.
4. Connect the ‘‘P2’’ and ‘‘P1’’ (large and small) connectors to the ‘‘A’’ carrier (see Figure 6-4). If necessary, to get enough slack in the cables, cut the tie wrap holding the intercabinet cables from the upright in the area being installed. Snap the connector lock into place to ensure the connection is properly made.
5. Connect the eight ground straps from the ‘‘C’’ carrier to the new ‘‘A’’ carrier (see Figure 6-3). These straps were left connected to the ‘‘C’’ carrier when the old ‘‘A’’ carrier was removed.
6. Connect the eight ground straps from the ‘‘D’’ carrier to the new ‘‘A’’ carrier (see Figure 6-3). These straps were left connected to the ‘‘D’’ carrier when the old ‘‘A’’ carrier was removed.

7. See NOTE. For an AC-powered expansion control carrier, install the two new carrier-ground straps. One strap connects ground point ‘‘1’’ to the A-carrier frame (on the right side), and the other connects ground point ‘‘8’’ to the A-carrier frame (on the left side).

   NOTE:
   DC-powered carriers do not use these carrier-ground straps.

8. Connect the loose end of the TDM/LAN cable (between the ‘‘A’’ and ‘‘D’’ carriers) to the pin-field block marked ‘‘TDM’’ on the right side of the ‘‘A’’ carrier (see Figure 6-5 and Table 6-4. The other end remained connected to the ‘‘D’’ carrier when the old carrier was removed.
9. Connect the loose end of the TDM/LAN cable (between the ‘‘A’’ and ‘‘C’’ carriers) to the pin-field block marked ‘‘TDM’’ on the left side of the ‘‘A’’ carrier. The other end remained connected to the ‘‘C’’ carrier when the old carrier was removed.

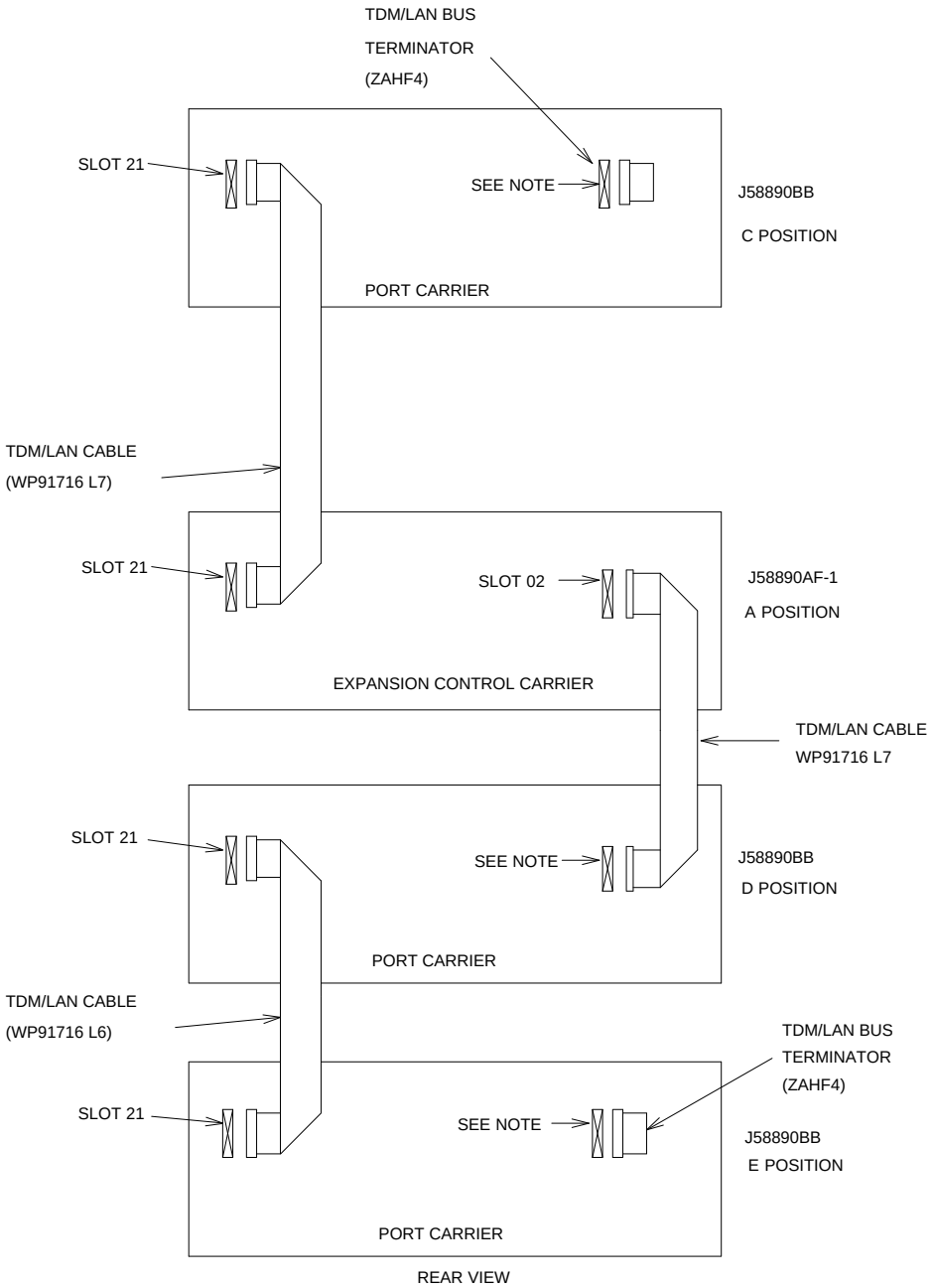

NOTE:

ON PORT CARRIER J58890BB-1, CONNECT THE TDM/LAN CABLE OR TDM/LAN TERMINATOR TO SLOT 02. ON PORT CARRIERS J58890BB-2 AND -3, CONNECT THE TDM/LAN CABLES TO SLOT 01.

Figure 6-5. TDM/LAN Connections for Standard-Reliability G3r V4 EPN

Table 6-4. TDM/LAN Connections

"J" Number	Carrier Type	LHS Slot	RHS Slot
J58890BB-1	Port	21	02
J58890BB-2	Port	21	01
J58890BB-3	Port	21	01
J58890AF	EPN Control "A"	21	02

10. Install the front trim plate on the "A" carrier. Install the fan trim plate.
11. Install the power units (removed from G2 universal module) into the "A" carrier. There are four different pairs of power units available. They are the 631AR1 and 631BR1, the 631WA1 and 631WB1, the 631DA1 and 631DB1, and the 644A and 645B.

    Do not interchange the physical locations of the units. The 631AR1, 631WA1, 631DA1, or 644A are installed in the left side, while the 631BR1, 631WB1, 631DB1, or 645B are installed in the right side (see Figure 6-6).
12. If the expansion control carrier contains a 631BR1, 631WB1, or 645B power unit, install the previously removed TN736 power unit in port slots "18" and "19" of the carrier (adjacent to the 631BR1, 631WB1, or 645B). If the system is equipped for neon message waiting, a TN752 or TN755 power unit must be used.

    NOTE:
    The TN736 is not required when the 631DB1 or 645B power unit is used in the J58890AF-1 expansion control carrier or the J58890BB-2 or J58890BB-3 port carriers. It is required in the J58890BB-1 port carrier, regardless of which 631 power unit is provided. Use the TN752 or TN755 if the system is equipped with neon message waiting.

13. Connect the power cords to the power units. The power cords are the white cables equipped with plugs that are run through the slots in the front of each carrier (see Figure 6-7).

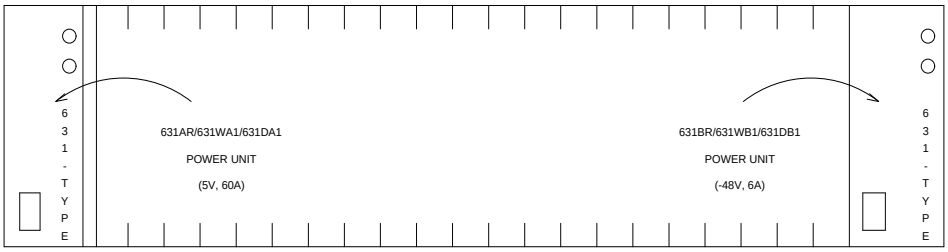

Figure 6-6. Locations of Power Units

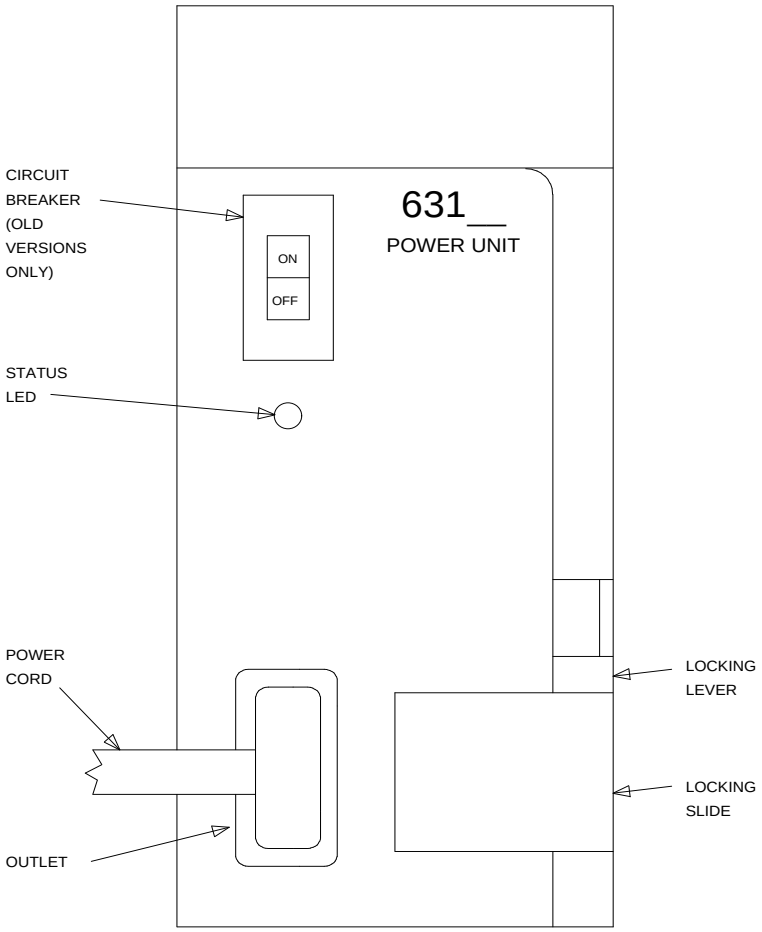

Figure 6-7. 631-Type Power Unit

Install Circuit Packs

1. See WARNING and NOTE. Install the new G3r V4 control circuit packs into carrier ‘‘A.’’ Use the following figure, the new decal, and the annotated ‘‘list configuration all’’ (provided with the G3r V4 tape) as a guide.

   WARNING:
   Before inserting or removing a circuit pack from a cabinet, put on a wrist strap and attach its plug or clip to the cabinet’s frame.

   NOTE:
   Currently, the TN768 Tone Clock circuit pack resides in a port slot of the universal module being upgraded. As part of this step, relocate this circuit pack to the ‘‘TONE CLOCK’’ slot of carrier ‘‘A.’’ AT&T recommends that you upgrade to the new TN2182 Tone-Clock circuit pack.

2. Install circuit-pack blanks in slots not equipped with circuit packs.
3. For a directly connected standard-reliability G3r V4 system with two port networks, ensure that the PPN and this EPN are both equipped with a TN570 expansion interface circuit pack.

   For a directly connected system with three port networks, ensure that the PPN and each EPN have two TN570s.

   For a CSS-connected system, ensure that each port network has a TN570 and that the switch node carrier has one TN573 for each port network.

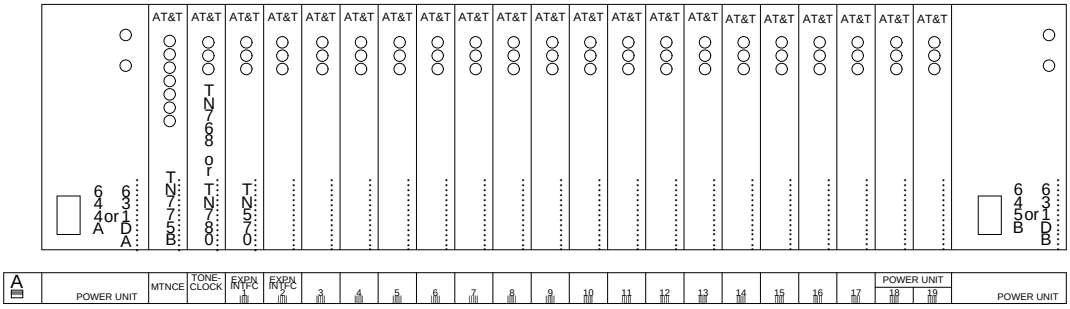

Figure 6-8. Circuit-Pack Locations in G3r V4 Expansion Control Carrier

Interconnect Port Networks — Standard-Reliability System

See NOTES. Fiber-optic cabling terminated to 9823A lightwave transceivers can interconnect port networks (PNs) located up to 4,900 feet (about 9/10 mile) apart. Whereas, fiber-optic cabling terminated to 9823B lightwave transceivers can interconnect port networks located up to 25,000 feet (about 4.7 miles) apart. When available and whenever the desired distance between the port networks is less than 25,000 feet, fiber is the preferred medium for interconnecting port networks, providing significantly higher-bandwidth connectivity than DS1C remoting.

NOTE:
As always, these distance limitations are approximate measurements of the *actual* fiber right-of-way (not of the shortest linear distance) between the two endpoints.

NOTE:
It is important to label every cable that you install. For details, refer to the section, *Labels for Fiber-Optic Cables*, in Appendix E of the installation manual.

NOTE:
Throughout these procedures, remember to keep track of which fiber is attached to which connector on each lightwave transceiver. This section provides figures offering the suggested way of making these connections.

The connectors on the lightwave transceivers are labeled either “TX” (transmit) or “RX” (receive), while the fibers attached to each connector are numbered either ‘‘1’’ or ‘‘2.’’ A viable fiber connection is only made when both fibers in each cable (that is, ‘‘1’’ and ‘‘2’’) route from the “TX” connector of a port network to the “RX” connector of its adjacent port network. For an example, refer to Figure 6-10.)

NOTE:
For implementation details, refer to the ‘‘Fiber Link Administration’’ sections of *DEFINITY Communications System Generic 3 V4 Implementation*, 555-230-655.

Collocated Port Networks

For a standard-reliability system with one collocated expansion port network, one fiber-optic cable (FL2P-P-XX) and two lightwave transceivers (9823-type) are required to directly connect the networks.

For a standard-reliability system with two collocated expansion port networks, three fiber-optic cables (FL2P-P-XX) and six lightwave transceivers (9823-type) are required to directly connect the networks.

NOTE:
For the FL2P-P-XX fiber-optic cable, the -XX suffix represents the length of the cable in feet. Based on floor-plan considerations, the length of these cables may vary. However, 20-foot cables are normally adequate for a G3r V4 with two port networks.

See NOTE. For collocated cabinets, the fiber-optic cables should be routed directly from the PPN to the EPN cabinet. If, for this upgrade, a ''DEFINITY style'' PPN cabinet is collocated with another ''DEFINITY style'' EPN cabinet, the preferred routing is to run the cables *up* the cable tray and out the top of the PPN cabinet. The cables are then run to the other cabinet, through the top of the cabinet, and down the cable tray to the desired carrier level.

NOTE:
Refer to Appendix E of *DEFINITY Communications System Generic 1 and Generic 3 Installation and Test*, 555-230-104, Issue 5, for additional guidelines about fiber routing.

If, for this upgrade, a ''DEFINITY style'' PPN cabinet is collocated with either a small cabinet, medium cabinet, or single-carrier cabinet stack, the preferred routing is to run the cables *down* the cable tray and out the bottom of the PPN cabinet. The cables are then run to the EPN cabinet and up the outside of the rear panels to the desired carrier level.

Fiber-Remoted Port Networks

For a standard-reliability system with one fiber-remoted expansion port network, two fiber-optic cables (FL2P-P-XX), two lightwave transceivers (9823-type), and two lightwave-interface units (provided by the PSC) are required.

For a standard-reliability system with two fiber-remoted expansion port networks, six fiber-optic cables (FL2P-P-XX), six lightwave transceivers (9823-type), and six lightwave-interface units (provided by the PSC) are required.

For fiber-remoted cabinets, the cables should be routed down the cable tray and out the bottom of the cabinet to the cross-connect field where the lightwave-interface units are located.

DS1C-Remoted Port Networks

For a standard-reliability system with one DS1C-remoted expansion port network, two DS1C circuit packs (TN574), two DS1C-to-EI cables (846448637 and/or 846448645), two H-600-348 cables, from one to four pairs of channel service units (CSUs), and from one to four pairs of wall-field cables (provided with the CSUs) are required.

For a standard-reliability system with two DS1C-remoted expansion port networks, this arrangement requires:

- Six DS1C circuit packs (TN574)
- Six DS1C-to-EI cables (846448637 and/or 846448645)
- Six H-600-348 cables
- Three, six, nine, or twelve pairs of channel service units (CSUs)
- Three, six, nine, or twelve pairs of wall-field cables (provided with the CSUs)

In any case, use cable ties to secure the cable against the walls of the cable tray at the cable-tie positions built into the trays.

For One or Two Collocated Expansion Port Networks

1. Behind port carrier B of PPN cabinet 1 (see Figure 6-9, Figure 6-10, Figure 6-11, and Figure 6-12):
    - Install a 9823-type lightwave transceiver on cable connector at slot 1B02.
    - Connect one end of the fiber-optic cable to the lightwave transceiver, just installed, at slot 1B02.
    - Delicately attach the fiber-optic cable (with cable ties) to the wall of the cable tray at the built-in cable-tie positions.
    - At the top of the cabinet, coil up the surplus length of fiber-optic cable. Use cable ties to secure the cable against the cable-tray wall.
2. Behind control carrier A of EPN cabinet 2:
    - Install the same kind (either 9823-A or 9823-B) of lightwave transceiver on cable connector at slot 2A01.
    - Connect the other end of the fiber-optic cable to the lightwave transceiver, just installed, at slot 2A01.
    - Delicately attach the fiber-optic cable (with cable ties) to the wall of the cable tray at the built-in cable-tie positions.
    - At the top of the cabinet, coil up the surplus length of fiber-optic cable. Delicately attach the coil to the cable-tray wall with cable ties.

For Two Collocated Expansion Port Networks

1. Behind port carrier C of PPN cabinet 1:
   - Install a 9823-type lightwave transceiver on cable connector at slot 1C02.
   - Connect one end of the fiber-optic cable to the lightwave transceiver, just installed, at slot 1C02.
   - Delicately attach the fiber-optic cable (with cable ties) to the wall of the cable tray at the built-in cable-tie positions.
   - At the top of the cabinet, coil up the surplus length of fiber-optic cable. Delicately attach the coil to the cable-tray wall with cable ties.
2. Behind control carrier A of EPN cabinet 3:
   - Install the same kind (either 9823-A or 9823-B) of lightwave transceiver on cable connector at slot 3A01.
   - Connect the other end of the fiber-optic cable to the lightwave transceiver, just installed, at slot 3A01.
   - Delicately attach the fiber-optic cable (with cable ties) to the wall of the cable tray at the built-in cable-tie positions.
   - At the top of the cabinet, coil up the surplus length of fiber-optic cable. Delicately attach the coil to the cable-tray wall with cable ties.
3. Behind control carrier A of EPN cabinet 2:
   - Install a 9823-type lightwave transceiver on cable connector at slot 2A02.
   - Connect one end of the fiber-optic cable to the lightwave transceiver, just installed, at slot 2A02.
   - Delicately attach the fiber-optic cable (with cable ties) to the wall of the cable tray at the built-in cable-tie positions.
   - At the top of the cabinet, coil up the surplus length of fiber-optic cable. Delicately attach the coil to the cable-tray wall with cable ties.
4. Behind control carrier A of EPN cabinet 3:
   - Install the same kind (either 9823-A or 9823-B) of lightwave transceiver on cable connector at slot 3A02.
   - Connect the other end of the fiber-optic cable to the lightwave transceiver, just installed, at slot 3A02.

- Delicately attach the fiber-optic cable (with cable ties) to the wall of the cable tray at the built-in cable-tie positions.
- At the top of the cabinet, coil up the surplus length of fiber-optic cable. Delicately attach the coil to the cable-tray wall with cable ties.

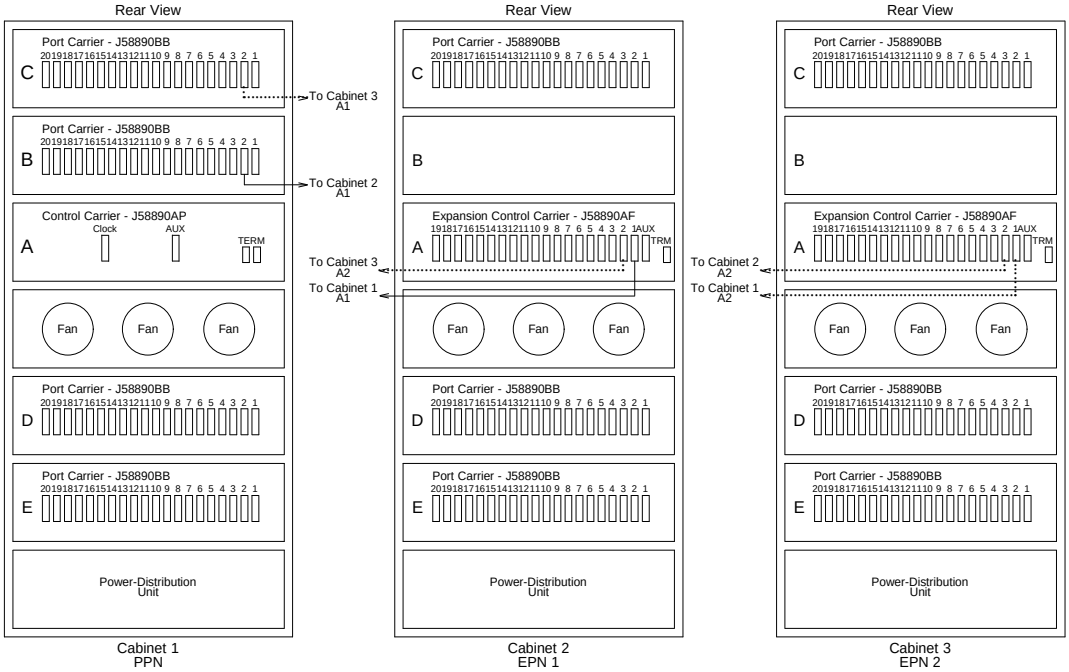

Figure 6-9. Standard-Reliability G3r V4 with Two or Three Port Networks

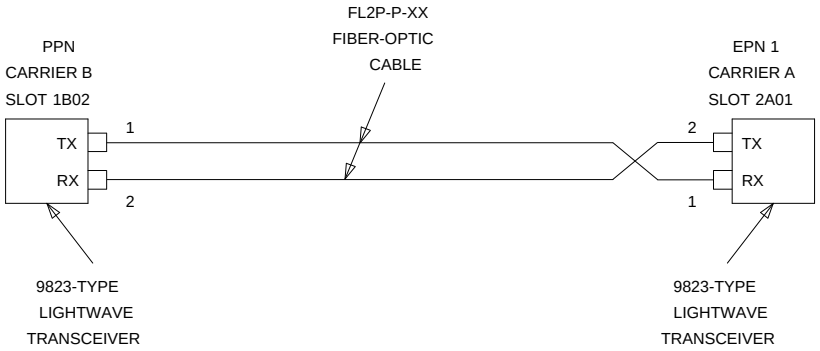

Figure 6-10. Fiber-Optic Connections PPN to EPN1

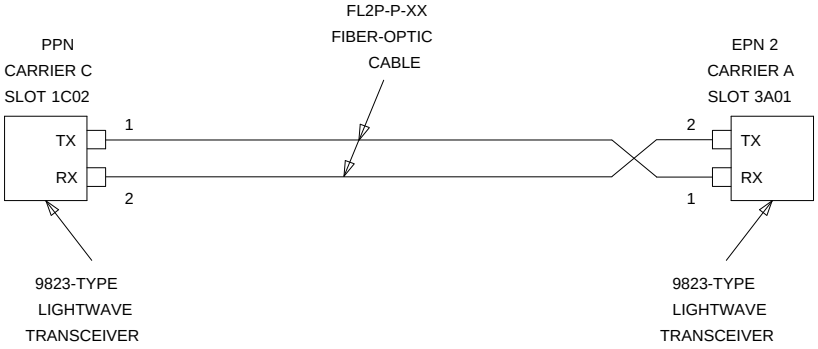

Figure 6-11. Collocated Fiber-Optic Connections PPN to EPN2

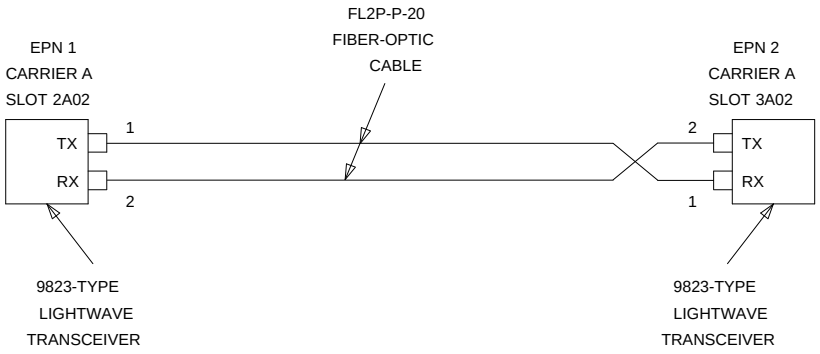

Figure 6-12. Collocated Fiber-Optic Connections EPN1 to EPN2

For One or Two Fiber-Remoted Expansion Port Networks

1. Behind port carrier B of PPN cabinet 1 (see Figure 6-13, Figure 6-14, Figure 6-15, and Figure 6-16):
   - Install a 9823-type lightwave transceiver on cable connector at slot 1B02.
   - Connect one end of the fiber-optic cable to the lightwave transceiver at slot 1B02.
   - Route the fiber-optic cable from the transceiver to the cabinet's cable tray and downward out of the cabinet through the cable manager to the PDS cross-connect facility.
   - At the PDS cross-connect facility, connect the fiber-optic cable to the lightwave-interface unit provided.
   - Delicately attach the fiber-optic cable (with cable ties) to the wall of the cable tray at the built-in cable-tie positions.
2. Behind control carrier A of EPN cabinet 2:
   - Install the same kind (either 9823-A or 9823-B) of lightwave transceiver on cable connector at slot 2A01.
   - Connect the fiber-optic cable to the lightwave transceiver slot 2A01.
   - Route the fiber-optic cable from the lightwave transceiver to the cabinet's cable tray and downward out of the cabinet through the cable manager to the PDS cross-connect facility.
   - At the PDS cross-connect facility, connect the fiber-optic cable to the lightwave-interface unit provided.
   - Delicately attach the fiber-optic cable (with cable ties) to the wall of the cable tray at the built-in cable-tie positions.
   - At the top of the cabinet, coil up the surplus length of fiber-optic cable. Use cable ties to secure the cable against the cable-tray wall.

For Two Fiber-Remoted Expansion Port Networks

1. Behind port carrier C of PPN cabinet 1:
   - Install a 9823-type lightwave transceiver on cable connector at slot 1C02.
   - Connect one end of the fiber-optic cable to the lightwave transceiver at slot 1C02.
   - Route the fiber-optic cable from the lightwave transceiver to the cabinet's cable tray and downward out of the cabinet through the cable manager to the PDS cross-connect facility.
   - At the PDS cross-connect facility, connect the fiber-optic cable to the lightwave-interface unit provided.
   - Delicately attach the fiber-optic cable (with cable ties) to the wall of the cable tray at the built-in cable-tie positions.
2. Behind control carrier A of EPN cabinet 3:
   - Install the same kind (either 9823-A or 9823-B) of lightwave transceiver on cable connector at slot 3A01.
   - Connect the fiber-optic cable to the lightwave transceiver slot 3A01.
   - Route the fiber-optic cable from the lightwave transceiver to the cabinet's cable tray and downward out of the cabinet through the cable manager to the PDS cross-connect facility.
   - At the PDS cross-connect facility, connect the fiber-optic cable to the lightwave-interface unit provided.
   - Delicately attach the fiber-optic cable (with cable ties) to the wall of the cable tray at the built-in cable-tie positions.
   - At the top of the cabinet, coil up the surplus length of fiber-optic cable. Delicately attach the coil to the cable-tray wall with cable ties.
3. Behind control carrier A of EPN cabinet 2:
   - Install a 9823-type lightwave transceiver on cable connector at slot 2A02.
   - Connect one end of the fiber-optic cable to the lightwave transceiver at slot 2A02.
   - Route the fiber-optic cable from the lightwave transceiver to the cabinet's cable tray and downward out of the cabinet through the cable manager to the PDS cross-connect facility.
   - At the PDS cross-connect facility, connect the fiber-optic cable to the lightwave-interface unit provided.

- Delicately attach the fiber-optic cable (with cable ties) to the wall of the cable tray at the built-in cable-tie positions.

4. Behind control carrier A of EPN cabinet 3:
   - Install the same kind (either 9823-A or 9823-B) of lightwave transceiver on cable connector at slot 3A02.
   - Connect the fiber-optic cable to the lightwave transceiver slot 3A02.
   - Route the fiber-optic cable from the lightwave transceiver to the cabinet's cable tray and downward out of the cabinet through the cable manager to the PDS cross-connect facility.
   - At the PDS cross-connect facility, connect the fiber-optic cable to the lightwave-interface unit provided.
   - Delicately attach the fiber-optic cable (with cable ties) to the wall of the cable tray at the built-in cable-tie positions.
   - At the top of the cabinet, coil up the surplus length of fiber-optic cable. Delicately attach the coil to the cable-tray wall with cable ties.

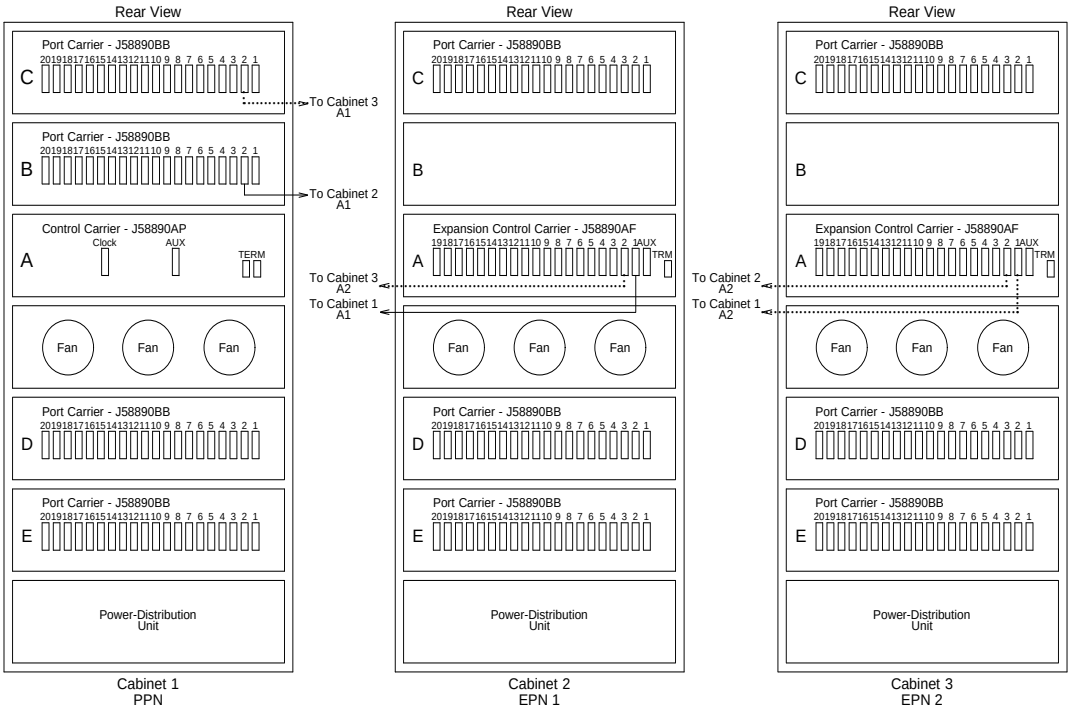

Figure 6-13. Standard-Reliability G3r V4 with Two or Three Port Networks

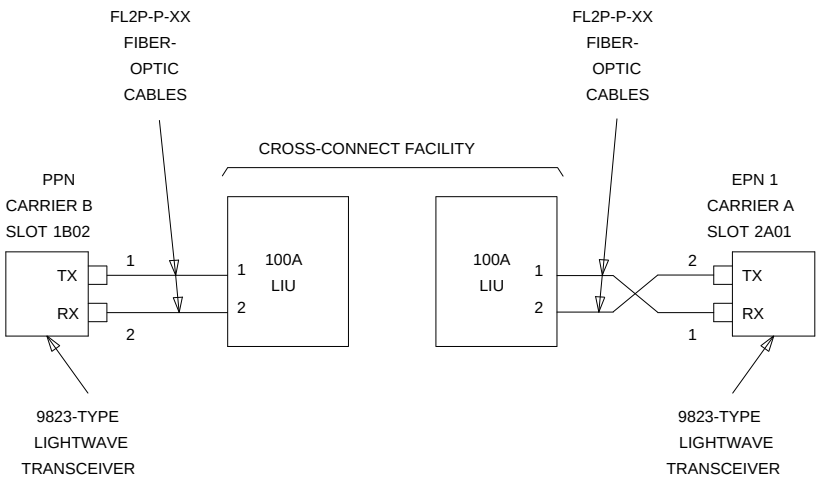

Figure 6-14. Fiber-Optic Connections PPN to EPN1

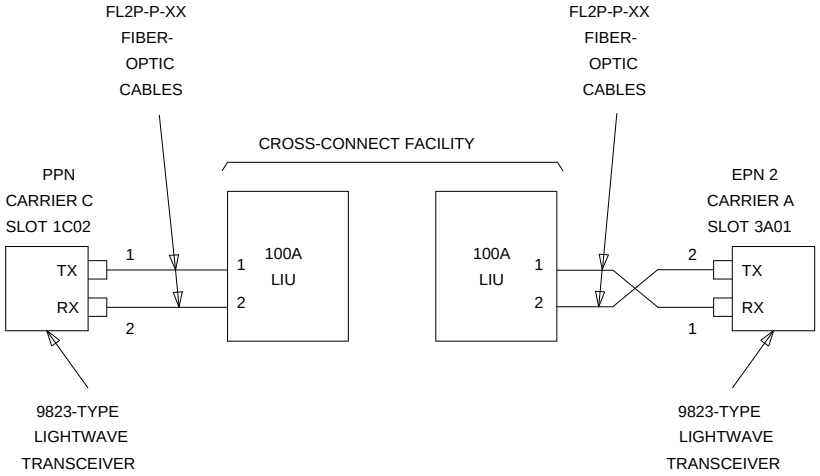

Figure 6-15. Fiber-Optic Connections PPN to EPN2

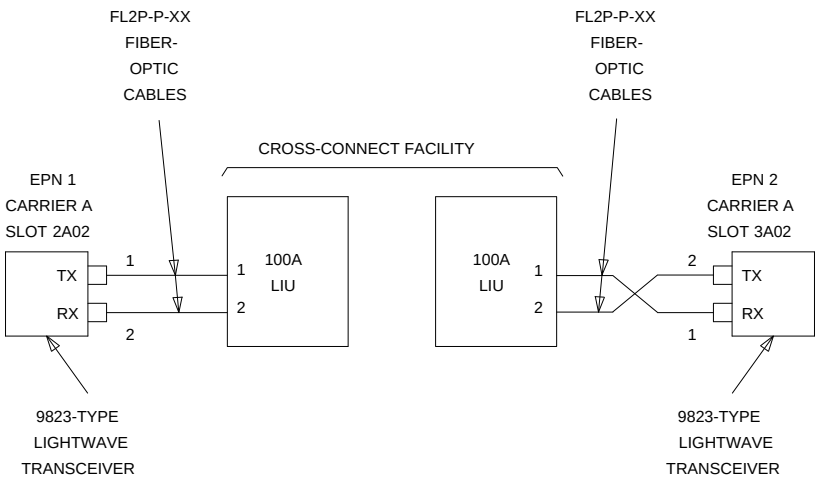

Figure 6-16. Fiber-Optic Connections EPN1 to EPN2

For One to Fifteen Switch-Connected Expansion Port Networks

1. Behind the PPN cabinet (see Figure 6-17):
   - Install a 9823-type lightwave transceiver on cable connector at slot 1E02.
   - Install a 9823-type lightwave transceiver on cable connector at slot 1B02.
   - Connect one end of the metallic intercarrier cable to the lightwave transceiver at slot 1E02.
   - Route the intercarrier cable from the lightwave transceiver to the cabinet's cable tray and upward to carrier "B."
   - Connect the other end of the intercarrier cable to the lightwave transceiver at slot 1B02.
   - Attach the intercarrier cable (with cable ties) to the wall of the cable tray at the built-in cable-tie positions.
2. Behind switch node carrier E of PPN cabinet 1 (see Figure 6-17):
   - For each EPN, install one 9823-type lightwave transceiver on a cable connector with the following order of slots: 1E20, 1E03, 1E19, 1E04, 1E18, 1E05, etc.
   - Connect one end of each fiber-optic cable to each lightwave transceiver, just installed.
   - Delicately attach the fiber-optic cables (with cable ties) to the wall of the cable tray at the built-in cable-tie positions.
3. Behind control carrier A of each EPN cabinet:
   - Install the same kind (either 9823-A or 9823-B) of lightwave transceiver on cable connector at slot A01.
   - Connect the other end of the fiber-optic cable to the lightwave transceiver, just installed, at slot A01.
   - Delicately attach the fiber-optic cable (with cable ties) to the wall of the cable tray at the built-in cable-tie positions.
   - At the top of the cabinet, coil up the surplus length of fiber-optic cable, and delicately attach the coil to the wall of the cable tray.

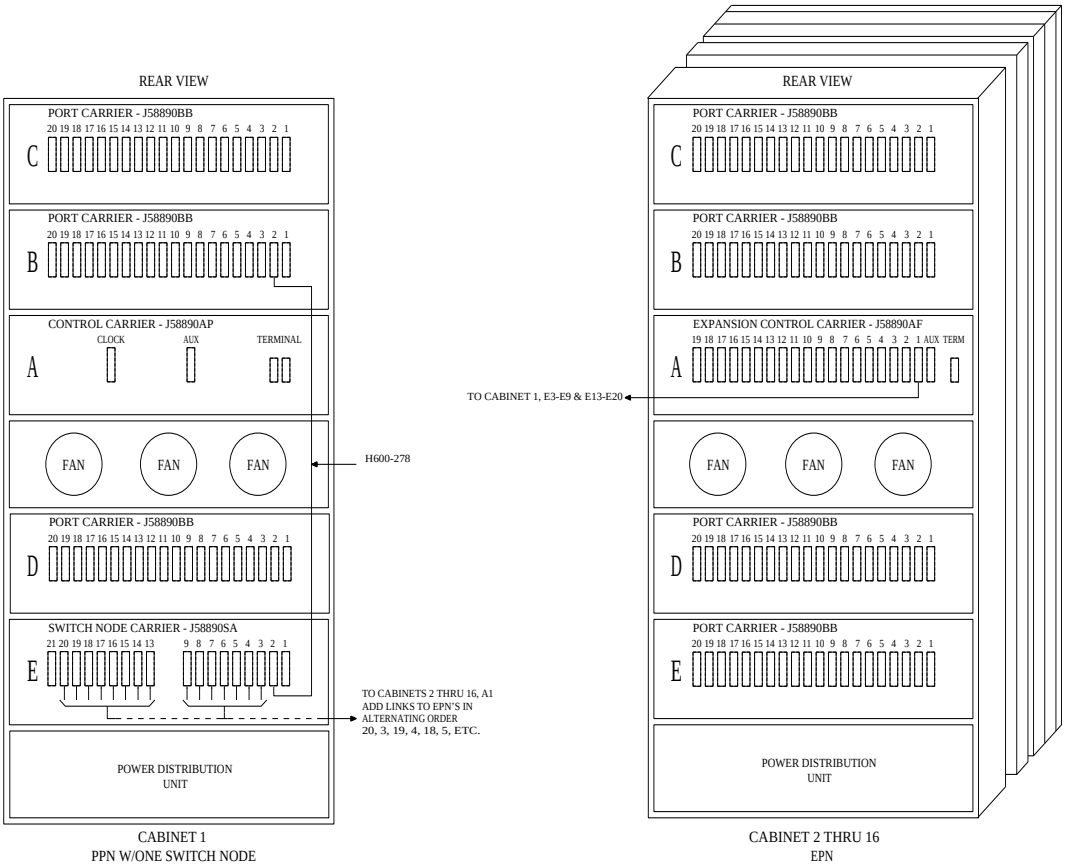

Figure 6-17. Fiber-Optic Connections through Center Stage Switch

DS1C-Remoted Cabinets

See NOTES. Digital Services 1 (DS1) facilities and associated equipment-room hardware and cabling can interconnect two port networks (PNs) located up to 100 miles apart. Although DS1 remoting always serves as a lower-bandwidth alternative to fiber remoting, DS1 remoting is especially attractive when:

- Fiber-optic cabling is unavailable to the remote site
- When the desired distance between the port networks exceeds the practical fiber limit of 25,000 feet (about 4.7 miles)
- Digital Services facilities, with enough bandwidth for interconnection, already exist between the two port networks

NOTE:
As always, these distance limitations are approximate measurements of the *actual* fiber or copper right-of-way (not of the shortest linear distance) between the two endpoints.

NOTE:
The 100-mile limit for DS1 remoting is the maximum distance between *any* two port networks in a G3r V4 system with either direct or switched port-network connections.

For example, in a *directly connected* system, a single EPN can be remoted up to 100 miles. This is because the length of the *direct* fiber connection from any port network in the local equipment room to the remote EPN is 100 miles.

However, if more than one EPN is remoted in a directly connected system, the 100-mile limit applies to any two port networks. Assuming straight cable runs, suppose that a customer wants to remote one EPN 80 miles due east and another EPN due north of the local PPN. This arrangement can only be accommodated if the second EPN resides no more than 60 miles north of the PPN. This is because the direct fiber distance between the two EPNs is also limited to 100 miles.

As another example, in *switch-connected* system with numerous port networks, one EPN might be remoted 75 miles from the switch node. If this were the case, then the maximum distance that any other EPN could be remoted would be 25 miles.

Digital public-network tie-trunk facilities provide the end-to end connectivity between the port networks. For either type of port network (PPN or EPN), a TN574 DS1 Converter (DS1C) circuit pack serves as the port-network interface to the DS1 facilities. As a PPN interface, a TN574 DS1C can reside in either:

- A port carrier (in any port slot)
- A switched node carrier (in port slot ‘‘1’’ or ‘‘21’’)

As an EPN interface, a TN574 DS1C can reside in an expansion control carrier (in any port slot).

DS1 Cabling within the Local Port Networks. See NOTE. Use the running list that accompanies the upgrade equipment to determine which cable should be connected where. The following paragraphs only provide conceptual information about wiring a DS1C interface either to an expansion interface or to a switched node interface, not step-by-step procedures for wiring a specific G3r V4 system.

NOTE:
It is important to label every cable that you install. For details, refer to the section, *Labels for Fiber-Optic Cables*, in Appendix E of the installation manual.

As shown in Figure 6-18, a cable connects each DS1C either to the appropriate TN570 expansion interface (for a direct connection to another port network) or to the appropriate TN573 SN Interface (for a switched connection to another port network). On the DS1C side, a 4C retainer binds this shielded cable to the DS1C port connector. On the EI/SNI side, a 4B retainer binds the cable to the EI/SNI port connector. The DS1C-to-EI/SNI cable also provides a piggy-back connector enabling subsequent access to the public network. Table 6-5 lists the cable numbers and lengths for the possible connections.

Table 6-5. Numbers and Lengths of DS1C-to-EI/SNI Cables

Connection Type	Comcode Number	Length
Within same carrier	846448637	1 foot
Between two carriers in same port network	846448645	5.5 feet
Between two carriers in adjacent networks	846448652, and one 846885259 bracket	1 foot (used with two 9823As, & one 20-foot fiber-optic cable)

DS1 Cabling to the Public Network. See NOTE. Use the running list that accompanies the upgrade equipment to determine which cable should be connected where. The following paragraphs only provide conceptual information about wiring a DS1C interface to a wall-field block, not step-by-step procedures for wiring a specific G3r V4 system.

NOTE:
It is important to label every cable that you install. For details, refer to the section, *Labels for Fiber-Optic Cables*, in Appendix E of the installation manual.

Figure 6-18 also shows the cabling between various port networks and the cross-connect field where the public network is accessed. If already connected to either an expansion or switched node interface, a DS1C circuit pack already resides either in an EPN expansion control carrier or in a PPN port carrier or switched node carrier.

Depending on the traffic requirements between the two port networks, a 25-foot H600-348 cable extends from the piggy-back connector (on each DS1C-to-EI/SNI cable) to from one to four channel service units (CSUs). [This cable branches to four 15-pin subminiature D-type connectors (labeled ‘‘01’’ to ‘‘04’’) to make the CSU connections.] Then, in turn, the CSU(s) are connected to the wall-field block (corresponding to the equipment location of the DS1C) at port connections ‘‘8,’’ ‘‘7,’’ ‘‘6,’’ and ‘‘5’’ (in descending order).

Neglecting overhead, this wiring arrangement can provide PN-to-PN communication at the bandwidth of up to four DS1 spans (1.544 Mbps each). Between each port network’s wall field, the port networks communicate across leased lines in the public network.

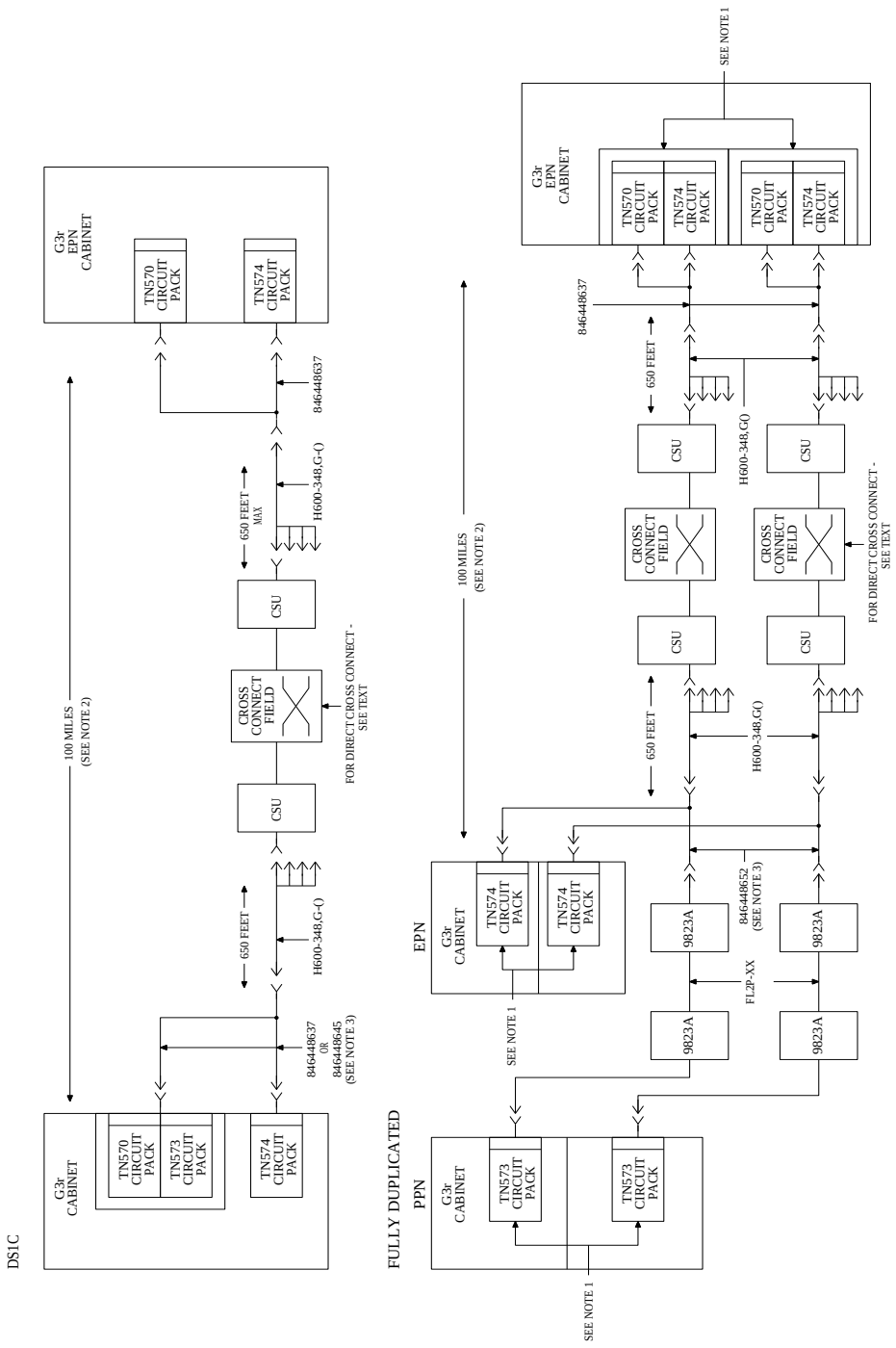

Figure 6-18. DS1 Connectivity between Remote PNs

Verify Usable Circuit-Pack Vintages

Verify that every G2 circuit pack reused in the upgrade conforms to the usable vintage requirements for a G3r V4 system (see Reference Guide for Circuit-Pack Vintages and Change Notices).

Install System Access Ports

As a prerequisite for connecting various endpoints that use EIA interfaces to the G3r V4 system, install the up to eight loop-around connections for Mode 2-to-Mode 3 (and vice versa) data conversion.

From the *outgoing* perspective of the system communicating with an EIA endpoint, these loop-around connections convert Mode 3 data (circuit-switched packet data, with undefined bit rates and packet specifications) to Mode 2 data (low-speed, usually asynchronous, data at rates of 300 to 19,200 bps) by:

- Accepting Mode 3 data off the LAN bus (from the SPE) at a TN553 Packet Data Line circuit pack, where Mode 3-to-Mode 2 conversion is done
- Routing the converted data through the cross-connect field and back to a TN726B Data Line where the equivalent Mode 2 data can access the TDM bus, for subsequent routing to an EIA endpoint

The endpoints that use these EIA interfaces and, therefore, require the Mode 2-to-Mode 3 conversion include:

- DEFINITY Communications System Generic 3 Management Applications (G3-MA)
- Remote DEFINITY Communications System Generic 3 Management Terminal (G3-MT)
- Basic Call Management System (BCMS) terminal
- Call Detail Recording Unit (CDRU)/Centralized Attendant Service Plus (CAS+)
- Property Management System (PMS)
- Printers

The following figures show this loop-around configuration and how the B25A cables are cross-connected.

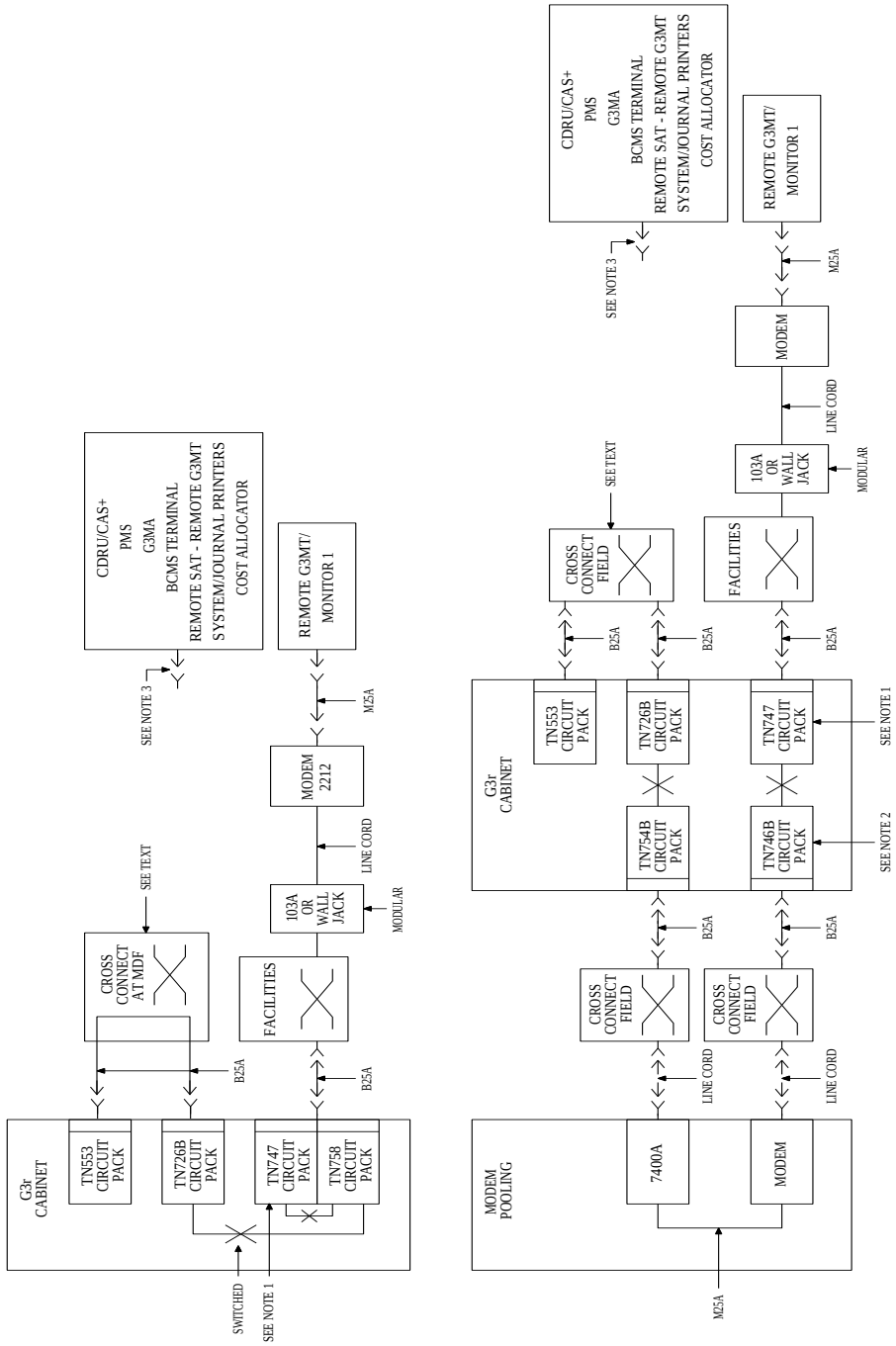

Figure 6-19. Connections: CDRU/CAS+, PMS, BCMS, Printers, G3-MA/MT

Pinouts for the TN553 and TN726B circuit packs shown cross-connected in the preceding figure are given in the table below.

Pinouts

TN553 (12 Ports)

1	26	
2	27	1
3	28	
4	29	2
5	30	
6	31	3
7	32	
8	33	4
9	34	
10	35	5
11	36	
12	37	6
13	38	
14	39	7
15	40	
16	41	8
17	42	
18	43	9
19	44	
20	45	10
21	46	
22	47	11
23	48	
24	49	12
25	50	G

TN726B (8 Ports)

1	26	Blank
2	27	
3	28	1
4	29	Blank
5	30	
6	31	2
7	32	Blank
8	33	
9	34	3
10	35	Blank
11	36	
12	37	4
13	38	Blank
14	39	
15	40	5
16	41	Blank
17	42	
18	43	6
19	44	Blank
20	45	
21	46	7
22	47	Blank
23	48	
24	49	8
25	50	Blank

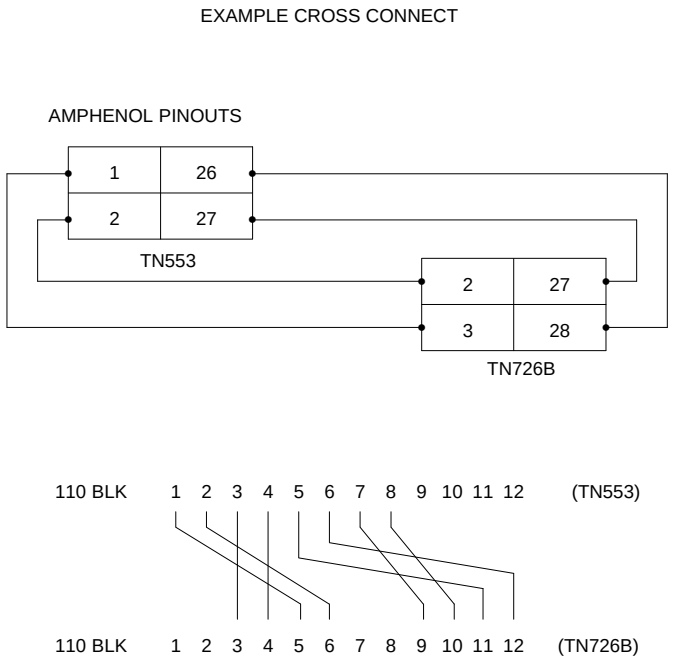

Figure 6-20. Example of Cross Connect between TN553 and TN726B

Remove Power-Failure Ground Strap

Remove the ground strap from the power-failure transfer unit.

Boot the G3r V4 System

1. Connect the G3-MT to the connector labeled ‘‘TERMINAL’’ behind PPN control carrier ‘‘A,’’ or install the G3-MA according to the ‘‘Set Up G3-MA’’ chapter of *DEFINITY Communications System Generic 3 Management Applications — Operations*, 585-229-202.
2. Verify that the new G3r V4 system tape is inserted in the PPN cabinet.
3. At each EPN power-distribution unit, set the main circuit breaker to ON.
4. At the PPN power-distribution unit, set the main circuit breaker to ON.
5. The system now goes through the reset level 4 rebooting process, loading the system translations from the preformatted disk. Rebooting requires 5 to 11 minutes.

Refer to ‘‘Initialization and Recovery’’ and ‘‘LED Interpretation’’ chapters in *DEFINITY Communications System Generic 3r V4 Maintenance*, 555-230-105, Issue 4, for circuit-pack LED indications and screen displays that occur during system reboot.

6. Get the order number of the upgrade, and call the regional CSA to request an ‘‘init’’ login so that right-to-use options can be enabled on the upgraded system.
7. Set the time to ensure that the system is booted properly.
8. Enter **`change sys cust`**. Press (RETURN). Use this form to assign the customer’s right-to-use options on the G2-to-G3r V4 upgrade order.
9. Enter **`change site-data`**. Press (RETURN). Use this form to assign system-specific information (such as building, floor, stations, etc.)
10. Enter **`change cabinet 1`**. Press (RETURN). Use this form to assign the appropriate carrier types for port network 1.
11. Enter **`save translation disk`**. Press (RETURN). This command instructs the system to write all translation information from memory to the disk.
12. Enter **`reset system 4`**. Press (RETURN). The system now goes through the reset level 4 rebooting process, loading the system translations from the disk. Rebooting requires 5 to 11 minutes.
13. Enter **`set vector 8`**. Press (RETURN). Use this form to assign the core dump vector so that fault information will be available in the event of a system failure.

Close Upgraded EPN Cabinet and Reconnect Cables

1. At the power-distribution unit of the upgraded EPN, set the main circuit breaker to OFF.

   NOTE:
   Powering down an EPN without powering down the PPN will set off alarms. However, these alarms should clear after power is restored to each EPN.

2. Temporarily disconnect the lightwave transceivers and fiber-optic cables, already labeled, from the appropriate carriers.
3. Replace the back doors or back panels previously removed.
4. At the EPN cabinet, reconnect the lightwave transceivers, fiber-optic cables, and the connector cables associated with the carrier being replaced.
5. Install the front door on the EPN cabinet if previously removed.

Power Up the EPN Cabinets

1. At each EPN power-distribution unit, set the main circuit breaker to ON.

   After about 40 seconds, EPN power and PPN/EPN communications return.

2. After power returns to each EPN and all trouble is cleared, verify that the EMERGENCY TRANSFER CONTROL switch is set to AUTO. This restores the system to the normal mode.

Retranslate Port Circuits

If port circuit packs in the G2 module control carrier were relocated in order to put:

- A critical port circuit pack, requiring longer nominal battery holdover (e.g., a DS1 or an Announcement circuit pack), in a port slot
- A TN736, TN752, or TN755 power supply in port slots ‘‘18’’ and ‘‘19’’
- A TN570 Expansion Interface in port slot ‘‘1’’
- A TN570 in port slot ‘‘2’’ (for a second directly connected EPN)

of the new expansion control carrier, they must be retranslated now. Refer to *DEFINITY Communications System Generic 3 V4 Implementation*, 555-230-655, for instructions on performing the retranslations.

Run Acceptance Tests

Refer to Chapter 11 of *DEFINITY Communications System Generic 1 and Generic 3 Installation and Test*, 555-230-104, Issue 5, and perform the appropriate tests.

Register System as G3r V4

Get the serial number of the new G3r V4 PPN, and call the INADS Database Administrator at the Technical Service Center (1-800-248-1111) to register the upgraded system as a G3r V4.

Return Replaced G2 Equipment

The G2 equipment replaced, during the upgrade to G3r V4, should be returned to AT&T according to the requirements outlined in:

BCS/Material Logistics, MSL/Attended Stocking Locations

Methods and Procedures for Basic Material Returns

The replaced G2 equipment includes:

- G2 common control (CC) cabinet, carriers, and circuit packs and G2 time-multiplexed switch (TMS) cabinet, carriers, and circuit packs

  or

  G2 CC/TMS cabinet, carriers, and circuit packs
- G2 traditional module cabinets, carriers, and circuit packs
- G2 universal module control carrier (J58890AK) and control circuit packs
- G2 tape cartridges
- 4-series lightwave transceivers

High-Reliability G2 to High-Reliability G3r V4

Refer to *DEFINITY Communications System Generic 1 and Generic 3 Installation and Test*, 555-230-104, Issue 5, to install the new PPN cabinet.

If traditional modules are being replaced by EPNs, refer to *DEFINITY Communications System Generic 1 and Generic 3 Installation and Test*, 555-230-104, Issue 5, to install the new EPNs.

Upgrade Cabinets

An existing universal-module cabinet is always upgraded to an EPN. Upgrade the cabinets using the following procedures.

A high-reliability G2 universal module is upgraded to a high-reliability G3r V4 EPN by:

- Removing the module control carrier in position ‘‘A’’
- Installing the J58890AF-1 expansion control carrier in position ‘‘A’’
- Adding the G3r V4 circuit packs
- Restructuring the port circuits as required

Prerequisite Hardware

The equipment in Table 6-6 *must* be on-site before the upgrade begins. Ensure that the tapes are G3r V4 tapes.

To place a claim for missing equipment, as part of the Streamlined Implementation process, call ‘‘1-800-772-5409,’’ and respond to the call prompter.

Table 6-6. Required Hardware

Equipment	Description	Quantity
PEC 6300-07X[U]	Processor Port Network	1
J58890AF	Expansion Control Carrier	1
106647985	TN775B Maintenance	1
103281788	TN570 Expansion Interface	w/o CSS: 2 or 6 (Note 1) w/CSS: 1 per port network
103281812	TN573 Switched Node Interface	w/CSS: 1 per port network
J58890TF	Tape Cartridge	4
63300A	FL2P-P-XX Fiber Cable	w/o CSS: 1 or 3 (Note 2) w/CSS: 1 per EPN
H600-278 G2	EI-to-SNI Metallic Cable	w/CSS: 2
106455348 or 106455363	9823-A Lightwave Transceiver 9823-B Lightwave Transceiver	w/o CSS: 2 or 6 (Note 3) w/CSS: 2 per EPN w/o CSS: 2 or 6 (Note 3) w/CSS: 2 per EPN

Notes:

1. Depending on the number of G3r V4 EPNs. Two are required for a high-reliability system with two port networks; six with three port networks. Either one or four TN570s are shipped loose with the EPN equipment. The factory has installed either one or two TN570s in the new PPN.
2. Depending on the number of G3r V4 EPNs. Two or six are required if the PPN and EPN(s) are remotely located. Assuming acceptable lengths, the fiber that previously connected an upgraded G2 universal module (*not* a traditional module) to the G2 TMS has the correct transceiver connectors and, therefore, can be reused.
3. One pair for each fiber connection. For each connection, one 9823-type lightwave transceiver is installed in an EPN, and one in the PPN. A 9823-type transceiver can be reused from each upgraded G2 universal module. Additional 9823-type transceivers, ordered separately, are also shipped loose with the EPN equipment.

Required Tools

The following tools and items may be required during the upgrade:

- High-intensity flashlight or AC drop light
- 3/8-inch flat-blade screwdriver with a 10-inch shank (minimum)
- 5/16-inch and 1/4-inch sockets with a ratchet and 10-inch extension
- Power screwdriver (optional)
- Long-nose pliers to disconnect grounding straps and straighten backplane pins
- Static-proof or original circuit-pack packaging for transporting circuit packs
- Labels for identifying the port circuit packs and cables attached to the rear of cabinets
- Receptacle for holding approximately 100 self-tapping screws
- 12 spare #12 and #10 self-tapping screws
- 4 spare carrier grounding straps
- Authorized wrist grounding strap
- Repair kit for backplane pins (KS-22876 L2 or equivalent)
- One copy of each of the following manuals:
  - *DEFINITY Communications System Generic 3r V4 Maintenance*, 555-230-105, Issue 4
  - *DEFINITY Communications System Generic 3 V4 Implementation*, 555-230-655

Preventive Maintenance

During the G3r V4 upgrade, follow routine preventive maintenance procedures on the system to be upgraded. For information about the procedures and necessary equipment, refer to the “Preventive Maintenance’’ section in *DEFINITY Communications System Generic 3r V4 Maintenance*, 555-230-105, Issue 4.

Verify System Status

Before proceeding, the system should be examined for alarms, and every problem should be corrected. The system must be alarm-free.

Label Cables

To make reconnecting the cables simpler and more reliable, label both ends of the connector cables associated with the carrier to be removed (if not already labeled).

Power Down G2 System

1. At the power-distribution unit, set the main circuit breaker to OFF.

Install Power-Failure Transfer Ground Strap

CAUTION:
To avoid contaminating single-point ground, do not connect the ground strap while the system is powered up.

1. Connect a strap's lead either to pin 49 of the connecting block or to pin 49 of the CAP (cable access panel) associated with the power-failure transfer panel.
2. Route the other lead to an approved ground source.
3. Connect the lead to the approved ground source.

Remove Doors and Panels and Disconnect Cables

1. Remove the front door from the cabinet (if desired).
2. With the cable retainer in front of you and the part number visible (4B or 4C), locate the slot that is almost vertical. This slot is adjacent to the part number. Insert a flat-blade screwdriver with a wide blade (1/4-inch recommended) into the slot. Twist the screwdriver while the blade is in the slot. The retainer will snap open easily, and the cable can be removed.
3. Disconnect previously labeled cables associated with the carrier to be removed.
4. Behind a ''DEFINITY style'' cabinet, remove the back doors from the cabinet.
5. Behind a previously upgraded cabinet, remove all of the back panels. (Two different types of screws hold the back panels to the cabinet. The #10 screws can be removed with a screwdriver or a 1/4-inch socket. The #12 screws can be removed with a screwdriver or a 5/16-inch socket.)

Remove Circuit Packs from Module Control Carrier A

1. To ensure that power units in the ‘‘A’’ carrier are properly replaced, label each power unit with its slot number.
2. Disconnect the power cords from the power units in the ‘‘A’’ carrier.
3. See WARNING. Remove all circuit packs and power units from carrier ‘‘A.’’ Store the circuit packs in the static-proof packaging.

   WARNING:
   Before inserting or removing a circuit pack from a cabinet, put on a wrist strap and attach its plug or clip to the cabinet’s frame.

4. Remove the circuit-pack blanks from slots that do not contain circuit packs.
5. Remove the front trim plate from the ‘‘A’’ carrier by pulling straight off.

Remove CURL from Module Control Carrier A

See NOTES. Remove the CFY1 current limiter (CURL) from the pin-field block marked ‘‘CURL’’ on the ‘‘A’’ carrier. The CURL is reused in the G3r V4 EPN.

NOTE:
Note the position of the components on the left side of the CURL.

NOTE:
Verify that the CURL meets the minimum usable vintage requirements.

Remove Module Control Carrier A

1. See CAUTION and NOTE. Disconnect one end of the TDM/LAN cable (between the ‘‘A’’ and ‘‘C’’ carriers) from the ‘‘A’’ carrier (see Figure 6-21). Leave the other end connected to the ‘‘C’’ carrier, and move the cable into a position so that it will not interfere with removing the ‘‘A’’ carrier.
2. See CAUTION and NOTE. Disconnect one end of the TDM/LAN cable (between the ‘‘A’’ and ‘‘D’’ carriers) from the ‘‘A’’ carrier. Leave the other end connected to the ‘‘D’’ carrier, and move the cable into a position so that it will not interfere with removing the ‘‘D’’ carrier.

   CAUTION:
   When removing the TDM/LAN cables from a previously upgraded carrier, be careful that none of the short pieces of shrink tubing come off the four corner pins of the pin-field block. Otherwise, when the new equipment is connected, -48 volts could short to ground.

NOTE:
Note the position of the cable before disconnecting each TDM/LAN cable.

3. Disconnect one end of the eight ground straps (between the ‘‘A’’ and ‘‘C’’ carriers) from the ‘‘A’’ carrier (see Figure 6-22). These straps will be reconnected to the new ‘‘A’’ carrier.
4. Disconnect one end of the eight ground straps (between the ‘‘A’’ and ‘‘D’’ carriers) from the ‘‘A’’ carrier (see Figure 6-22). These straps will be reconnected to the new ‘‘A’’ carrier.
5. Disconnect the ‘‘P1’’ (small 9-pin) connector and the ‘‘P2’’ (large 38-pin) connector from the ‘‘A’’ carrier (see Figure 6-23). Move the cables into a position where they will not interfere with removing the carrier.
6. Slide the latch up, and disconnect the ‘‘P1’’ (small 9-pin) connector from the ‘‘B’’ carrier (see Figure 6-23). Move the cable into a position where it will not interfere with removing the carrier.
7. Remove the fan trim plate by pulling straight off.
8. Clean or replace the air filter (403326820) if necessary.
9. In front of carrier, remove the four screws (top two first) holding the ‘‘A’’ carrier to the cabinet frame. Use a long-handle screwdriver or 5/16-inch socket with a 10-inch extension.
10. Behind the carrier in a ‘‘DEFINITY style’’ cabinet, remove the two screws holding the ‘‘A’’ carrier’s rear connector panel to the cabinet frame.
11. See CAUTION. Slide the carrier forward 1 to 2 inches; then, from the back, be sure that no cables or wiring harnesses are caught on the cabinet/carrier framework.

CAUTION:
Cables and wiring harnesses can be damaged if they catch on the framework and if too much pressure is applied in removing the carrier.

12. Remove the carrier by sliding it out the front of the cabinet.

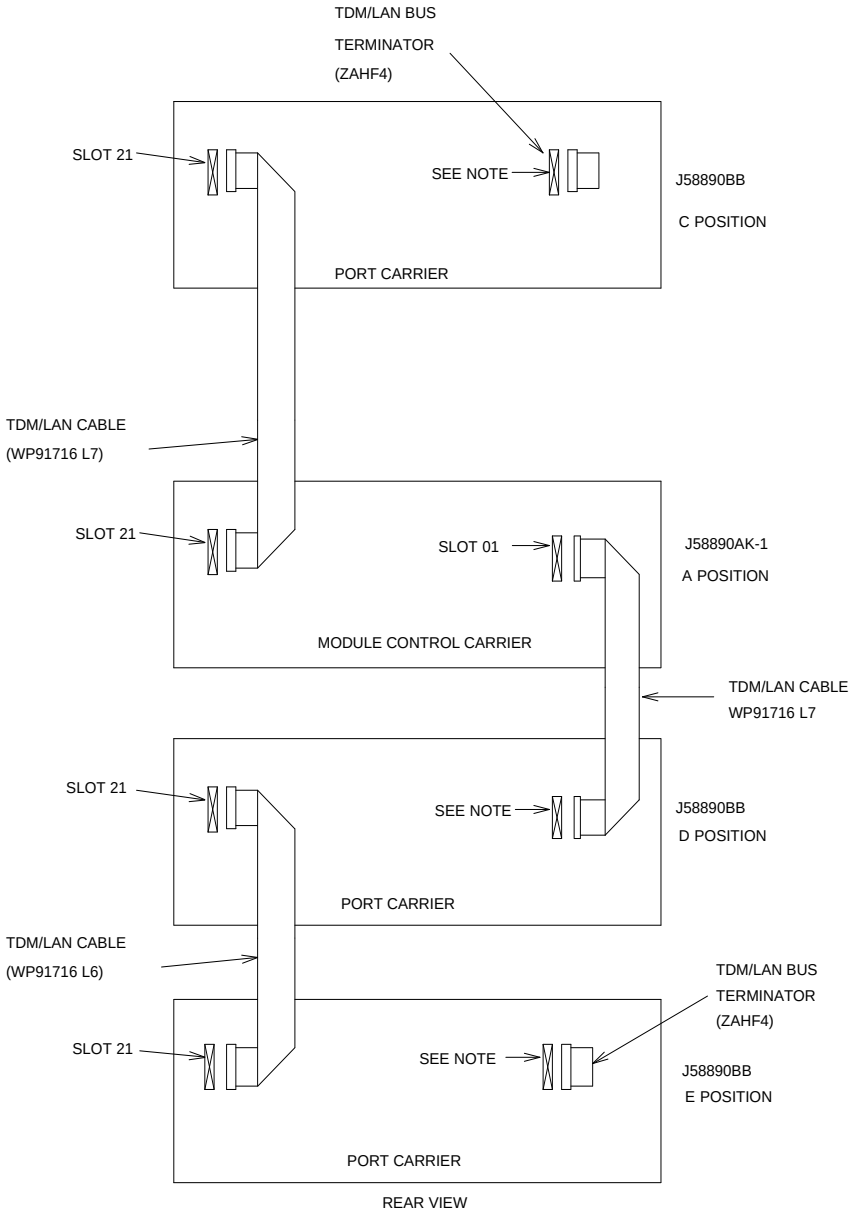

NOTE:
ON PORT CARRIER J58890BB-1, CONNECT THE TDM/LAN CABLE OR TDM/LAN TERMINATOR TO SLOT 02. ON PORT CARRIERS J58890BB-2 AND -3, CONNECT THE TDM/LAN CABLES TO SLOT 01.

Figure 6-21. TDM/LAN Connections for High-Reliability G2 Universal Module

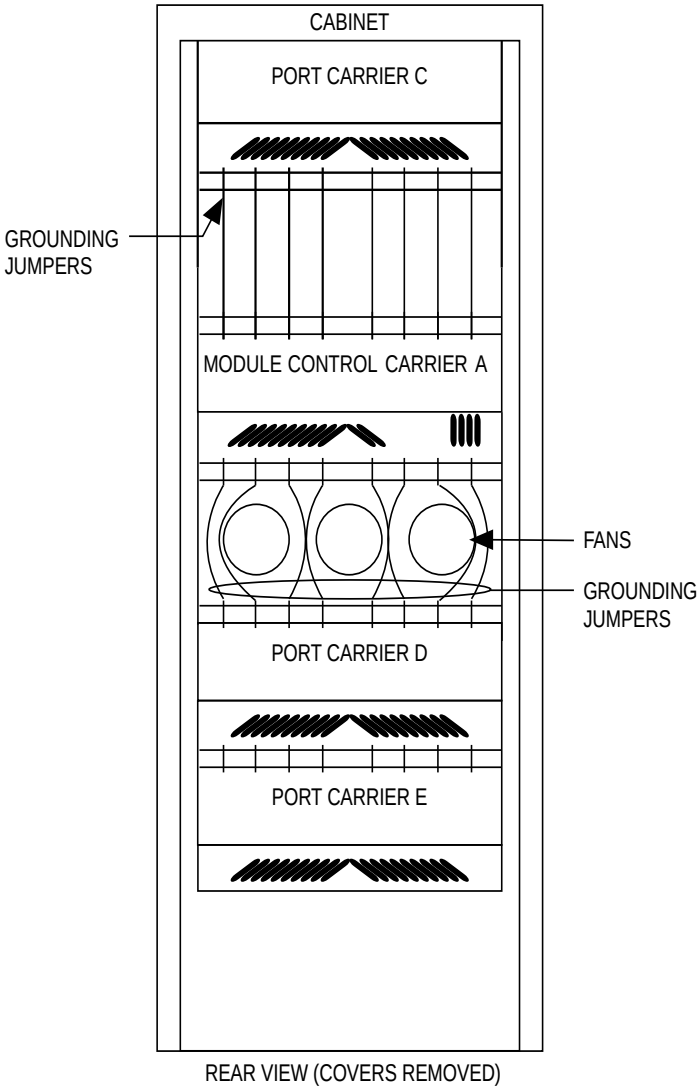

Figure 6-22. Locations of Grounding Jumpers

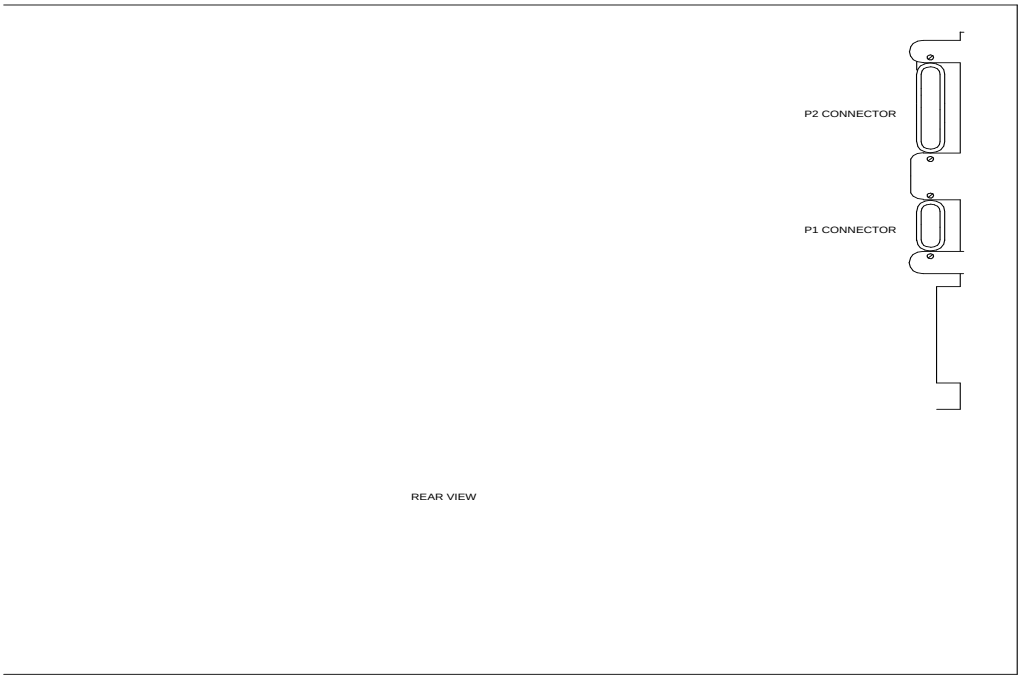

Figure 6-23. Location of P1 and P2 Connectors

Prepare New Expansion Control Carrier A

1. Visually inspect the new carrier for any damage. Verify that the backplane pins are not bent.
2. Place the expansion control carrier on the floor so that the rear of the carrier faces up.
3. Install the CFY1 current limiter (CURL) on the ‘‘A’’ carrier to the pin-field block marked ‘‘CURL.’’ The CURL is inserted with the components on the left side as viewed from the rear.
4. At the rear connector panel, determine which connectors will have a cable attached, and install a 4B cable retainer on each of these connectors.

Install New Expansion Control Carrier A

1. Install the J58890AF expansion control carrier in position ‘‘A’’ by lining up the plastic alignment tips on the top rear of the carrier with the screw holes in the cabinet. These alignment tips will support the carrier while the screws are being replaced. Ensure that the power cords are properly placed in the slots at the sides of the carrier.
2. See CAUTION. Fasten the carrier into position with four self-tapping screws saved from the removal of the old carrier.

   CAUTION:
   Carefully realign the threads on the self-tapping screws by turning them clockwise a turn or two before tightening them to avoid stripping the threads out of the framework.

3. Behind the carrier in a ‘‘DEFINITY style’’ cabinet, replace the two screws saved from the removal of the old carrier.
4. Connect the ‘‘P2’’ and “P1’’ (large and small) connectors to the ‘‘A’’ carrier. If necessary, to get enough slack in the cables, cut the tie wrap holding the intercabinet cables from the upright in the area of the carrier being installed. Snap the connector lock into place to ensure the connection is properly made (see Figure 6-23).
5. Connect the ‘‘P1’’ (small) connector to the ‘‘C’’ carrier. To get enough slack in the cables, cut the tie wrap holding the intercabinet cables from the upright in the area of the carrier being installed. Snap the connector lock into place to ensure the connection is properly made.
6. Connect the eight ground straps from the ‘‘D’’ carrier to the new ‘‘A’’ carrier (see Figure 6-22). These straps were left connected to the ‘‘D’’ carrier.
7. Connect the eight ground straps from the ‘‘C’’ carrier to the new ‘‘A’’ carrier (see Figure 6-22). These straps were left connected to the ‘‘C’’ carrier.

8. See NOTE. For an AC-powered expansion control carrier, install the two new carrier-ground straps. One strap connects ground point ‘‘1’’ to the A-carrier frame (on the right side), and the other connects ground point ‘‘8’’ to the A-carrier frame (on the left side).

   NOTE:
   DC-powered carriers do not use these carrier-ground straps.

9. Connect the loose end of the TDM/LAN cable (between the ‘‘A’’ and ‘‘D’’ carriers) to the pin-field block marked ‘‘TDM’’ on the right side of the ‘‘A’’ carrier (see Figure 6-24 and Table 6-7). The other end remained connected to the ‘‘D’’ carrier when the old carrier was removed.

10. Connect the loose end of the TDM/LAN cable (between the ‘‘A’’ and ‘‘C’’ carriers) to the pin-field block marked ‘‘TDM’’ on the left side of the ‘‘A’’ carrier. The other end remained connected to the ‘‘C’’ carrier when the old carrier was removed.

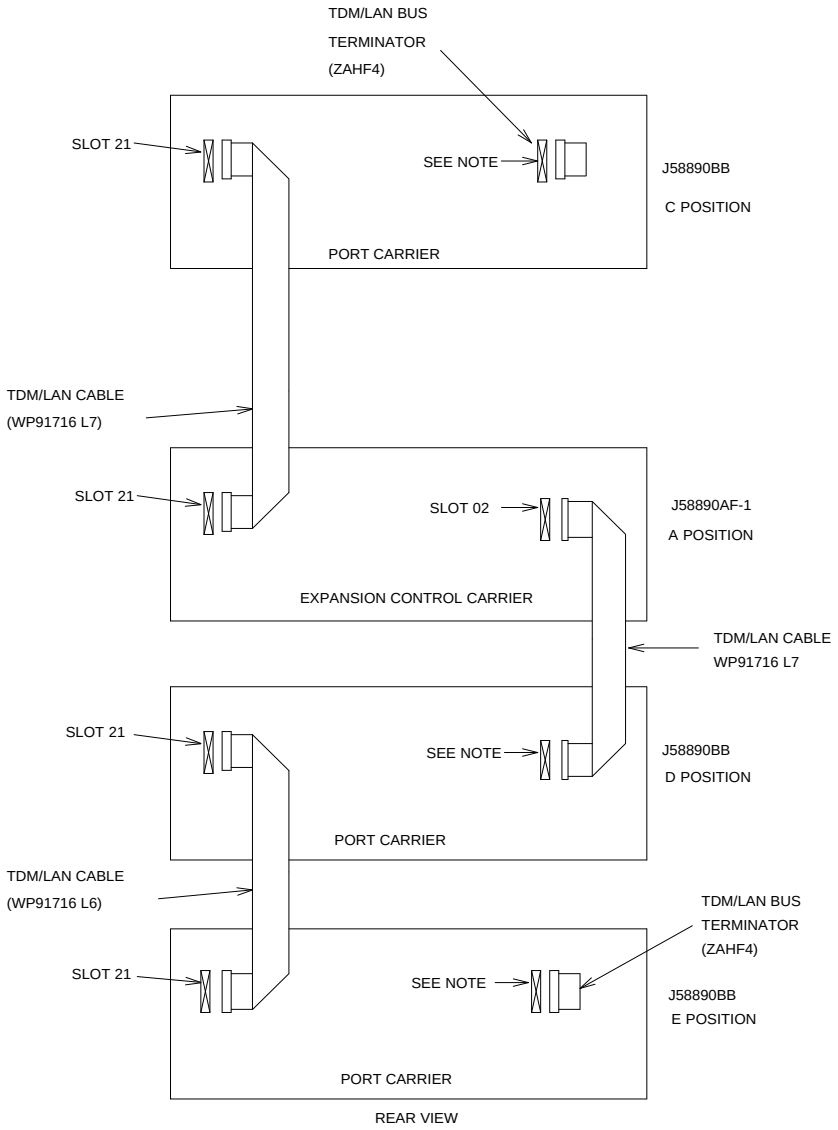

NOTE:
ON PORT CARRIER J58890BB-1, CONNECT THE TDM/LAN CABLE OR TDM/LAN TERMINATOR TO SLOT 02. ON PORT CARRIERS J58890BB-2 AND -3, CONNECT THE TDM/LAN CABLES TO SLOT 01.

Figure 6-24. TDM/LAN Connections for High-Reliability G3r V4 EPN

Table 6-7. TDM/LAN Connections

"J" Number	Carrier Type	LHS Slot	RHS Slot
J58890BB-1	Port	21	02
J58890BB-2	Port	21	01
J58890BB-3	Port	21	01
J58890AF	EPN Control "A"	21	02

11. Install the front trim plate on the "A" carrier.
12. Install the power units (removed from G2 module control carrier) into the "A" carrier. There are four different pairs of power units available. They are the 631AR1 and 631BR1, the 631WA1 and 631WB1, the 631DA1 and 631DB1, and the 644A and 645B.

    Do not interchange the physical locations of the units. The 631AR1, 631WA1, 631DA1, or 644A are installed in the left side, while the 631BR1, 631WB1, 631DB1, or 645B are installed in the right side (see Figure 6-25).
13. If the expansion control carrier contains a 631BR1, 631WB1, or 645B power unit, install the previously removed TN736 power unit in port slots "18" and "19" of the carrier (adjacent to the 631BR1, 631WB1, or 645B). If the system is equipped for neon message waiting, a TN752 or TN755 power unit must be used.

    NOTE:
    The TN736 is not required when the 631DB1 or 645B power unit is used in the J58890AH-1 control carrier or the J58890BB-2 or J58890BB-3 port carriers. It is required in the J58890BB-1 port carrier, regardless of which 631 power unit is provided. Use the TN752 or TN755 if the system is equipped with neon message waiting.

14. Connect the power cords to the power units. The power cords are the white cables equipped with plugs that are run through the slots in the front of each carrier (see Figure 6-26).

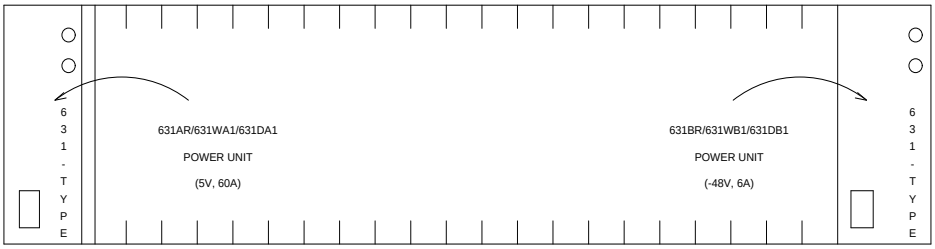

Figure 6-25. Locations of Power Units

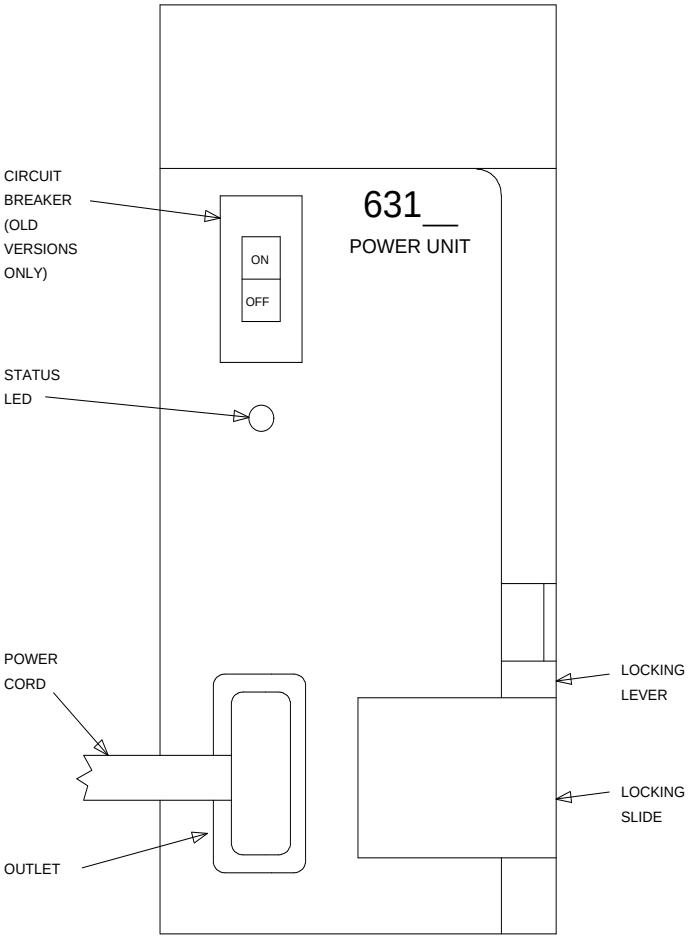

Figure 6-26. 631-Type Power Unit

Install Circuit Packs

1. See WARNING and NOTE. Install the new G3r V4 control circuit packs into carrier ‘‘A.’’ Use the following figure, the new decal, and the annotated ‘‘list configuration all’’ (provided with the G3r V4 tape) as a guide.

   WARNING:
   Before inserting or removing a circuit pack from a cabinet, put on a wrist strap and attach its plug or clip to the cabinet’s frame.

   NOTE:
   Currently, the TN768 Tone-Clock circuit pack resides in a port slot of the universal module being upgraded. As part of this step, relocate this circuit pack to the ‘‘TONE CLOCK’’ slot of carrier ‘‘A.’’ AT&T recommends that you upgrade to the TN2182 Tone-Clock.

2. For a directly connected high-reliability G3r V4 system with two port networks, ensure that the PPN and this EPN are both equipped with a TN570 expansion interface circuit pack.

   For a directly connected system with three port networks, ensure that the PPN and each EPN have two TN570s.

   For a CSS-connected system, ensure that each port network has a TN570 and that the switch node carrier has one TN573 for each port network.

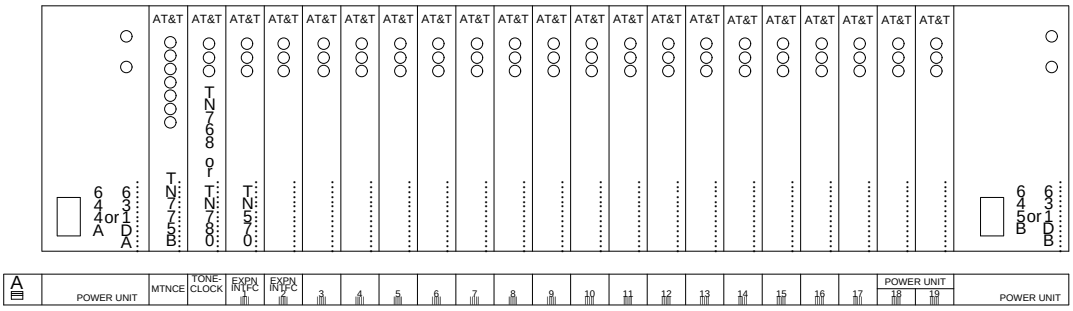

Figure 6-27. Circuit-Pack Locations in G3r V4 Expansion Control Carrier

Interconnect Port Networks — High-Reliability System

See NOTES. Fiber-optic cabling terminated to 9823A lightwave transceivers can interconnect port networks (PNs) located up to 4,900 feet (about 9/10 mile) apart. Whereas, fiber-optic cabling terminated to 9823B lightwave transceivers can interconnect port networks located up to 25,000 feet (about 4.7 miles) apart. When available and whenever the desired distance between the port networks is less than 25,000 feet, fiber is the preferred medium for interconnecting port networks, providing significantly higher-bandwidth connectivity than DS1C remoting.

NOTE:
As always, these distance limitations are approximate measurements of the *actual* fiber right-of-way (not of the shortest linear distance) between the two endpoints.

NOTE:
It is important to label every cable that you install. For details, refer to the section, *Labels for Fiber-Optic Cables*, in Appendix E of the installation manual.

NOTE:
Throughout these procedures, remember to keep track of which fiber is attached to which connector on each lightwave transceiver. This section provides figures offering the suggested way of making these connections.

The connectors on the lightwave transceivers are labeled either “TX” (transmit) or “RX” (receive), while the fibers attached to each connector are numbered either ‘‘1’’ or ‘‘2.’’ A viable fiber connection is only made when both fibers in each cable (that is, ‘‘1’’ and ‘‘2’’) route from the “TX” connector of a port network to the “RX” connector of its adjacent port network. For an example, refer to Figure 6-29.)

NOTE:
For implementation details, refer to the ‘‘Fiber Link Administration’’ sections of *DEFINITY Communications System Generic 3 V4 Implementation*, 555-230-653.

Collocated Port Networks

For a high-reliability system with one collocated expansion port network, one fiber-optic cable (FL2P-P-XX) and two lightwave transceivers (9823-type) are required to directly connect the networks.

For a high-reliability system with two collocated expansion port networks, three fiber-optic cables (FL2P-P-XX) and six lightwave transceivers (9823-type) are required to directly connect the networks.

NOTE:
For the FL2P-P-XX fiber-optic cable, the -XX suffix represents the length of the cable in feet. Based on floor-plan considerations, the length of these cables may vary. However, 20-foot cables are normally adequate for a G3r V4 with two port networks.

See NOTE. For collocated cabinets, the fiber-optic cables should be routed directly from the PPN to the EPN cabinet. If, for this upgrade, a ‘‘DEFINITY style’’ PPN cabinet is collocated with another ‘‘DEFINITY style’’ EPN cabinet, the preferred routing is to run the cables *up* the cable tray and out the top of the PPN cabinet. The cables are then run to the other cabinet, through the top of the cabinet, and down the cable tray to the desired carrier level.

NOTE:
Refer to Appendix E of *DEFINITY Communications System Generic 1 and Generic 3 Installation and Test*, 555-230-104, Issue 5, for additional guidelines about fiber routing.

If, for this upgrade, a ‘‘DEFINITY style’’ PPN cabinet is collocated with either a small cabinet, medium cabinet, or single-carrier cabinet stack, the preferred routing is to run the cables *down* the cable tray and out the bottom of the PPN cabinet. The cables are then run to the EPN cabinet and up the outside of the rear panels to the desired carrier level.

Fiber-Remoted Port Networks

For a high-reliability system with one fiber-remoted expansion port network, two fiber-optic cables (FL2P-P-XX), two lightwave transceivers (9823-type), and two lightwave-interface units (provided by the PSC) are required.

For a high-reliability system with two fiber-remoted expansion port networks, six fiber-optic cables (FL2P-P-XX), six lightwave transceivers (9823-type), and six lightwave-interface units (provided by the PSC) are required.

For fiber-remoted cabinets, the cables should be routed down the cable tray and out the bottom of the cabinet to the cross-connect field where the lightwave-interface units are located.

DS1C-Remoted Port Networks

For a high-reliability system with one DS1C-remoted expansion port network, two DS1C circuit packs (TN574), two DS1C-to-EI cables (846448637 and/or 846448645), two H-600-348 cables, from one to four pairs of channel service units (CSUs), and from one to four pairs of wall-field cables (provided with the CSUs) are required.

For a high-reliability system with two DS1C-remoted expansion port networks, this arrangement requires:

- Six DS1C circuit packs (TN574)
- Six DS1C-to-EI cables (846448637 and/or 846448645)
- Six H-600-348 cables
- Three, six, nine, or twelve pairs of channel service units (CSUs)
- Three, six, nine, or twelve pairs of wall-field cables (provided with the CSUs)

In any case, use cable ties to secure the cable against the walls of the cable tray at the cable-tie positions built into the trays.

For One or Two Collocated Expansion Port Networks

1. Behind port carrier C of PPN cabinet 1 (see Figure 6-28, Figure 6-29, Figure 6-30, and Figure 6-31):
   - Install a 9823-type lightwave transceiver on cable connector at slot 1C02.
   - Connect one end of the fiber-optic cable to the lightwave transceiver, just installed, at slot 1C02.
   - Delicately attach the fiber-optic cable (with cable ties) to the wall of the cable tray at the built-in cable-tie positions.
   - At the top of the cabinet, coil up the surplus length of fiber-optic cable. Delicately attach the coil to the cable-tray wall with cable ties.
2. Behind control carrier A of EPN cabinet 2:
   - Install the same kind (either 9823-A or 9823-B) of lightwave transceiver on cable connector at slot 2A01.
   - Connect the other end of the fiber-optic cable to the lightwave transceiver, just installed, at slot 2A01.
   - Delicately attach the fiber-optic cable (with cable ties) to the wall of the cable tray at the built-in cable-tie positions.
   - At the top of the cabinet, coil up the surplus length of fiber-optic cable. Delicately attach the coil to the cable-tray wall with cable ties.

For Two Collocated Expansion Port Networks

1. Behind port carrier D of PPN cabinet 1:
   - Install a 9823-type lightwave transceiver on cable connector at slot 1D02.
   - Connect one end of the fiber-optic cable to the lightwave transceiver, just installed, at slot 1D02.
   - Delicately attach the fiber-optic cable (with cable ties) to the wall of the cable tray at the built-in cable-tie positions.
   - At the top of the cabinet, coil up the surplus length of fiber-optic cable. Delicately attach the coil to the cable-tray wall with cable ties.
2. Behind control carrier A of EPN cabinet 3:
   - Install the same kind (either 9823-A or 9823-B) of lightwave transceiver on cable connector at slot 3A01.
   - Connect the other end of the fiber-optic cable to the lightwave transceiver, just installed, at slot 3A01.
   - Delicately attach the fiber-optic cable (with cable ties) to the wall of the cable tray at the built-in cable-tie positions.
   - At the top of the cabinet, coil up the surplus length of fiber-optic cable. Delicately attach the coil to the cable-tray wall with cable ties.
3. Behind control carrier A of EPN cabinet 2:
   - Install a 9823-type lightwave transceiver on cable connector at slot 2A02.
   - Connect one end of the fiber-optic cable to the lightwave transceiver, just installed, at slot 2A02.
   - Delicately attach the fiber-optic cable (with cable ties) to the wall of the cable tray at the built-in cable-tie positions.
   - At the top of the cabinet, coil up the surplus length of fiber-optic cable. Delicately attach the coil to the cable-tray wall with cable ties.
4. Behind control carrier A of EPN cabinet 3:
   - Install the same kind (either 9823-A or 9823-B) of lightwave transceiver on cable connector at slot 3A02.
   - Connect the other end of the fiber-optic cable to the lightwave transceiver, just installed, at slot 3A02.

- Delicately attach the fiber-optic cable (with cable ties) to the wall of the cable tray at the built-in cable-tie positions.
- At the top of the cabinet, coil up the surplus length of fiber-optic cable. Delicately attach the coil to the cable-tray wall with cable ties.

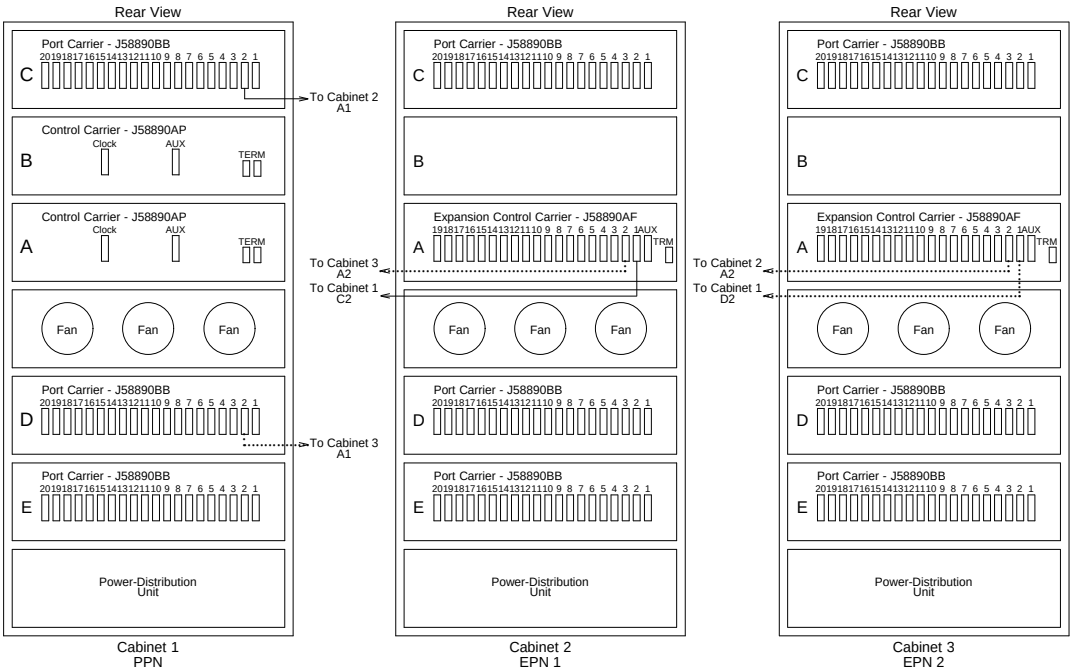

Figure 6-28. High-Reliability G3r V4 with Two or Three Port Networks

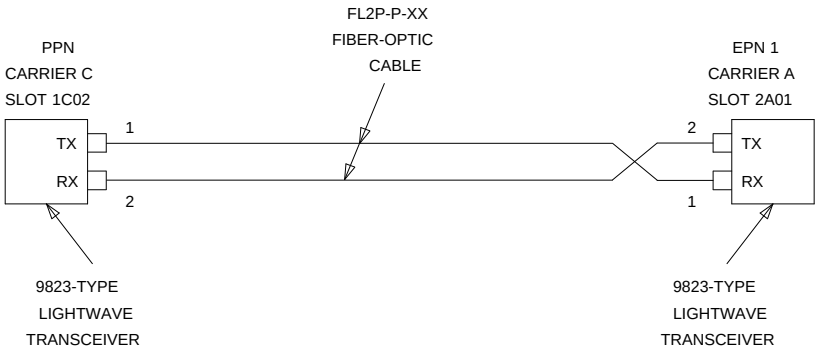

Figure 6-29. Fiber-Optic Connections PPN to EPN1

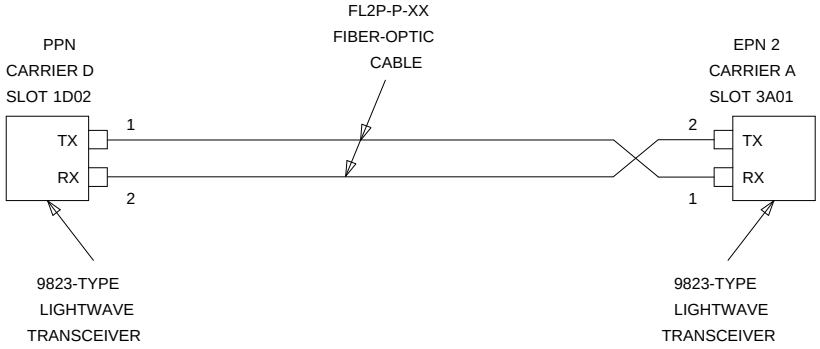

Figure 6-30. Fiber-Optic Connections PPN to EPN2

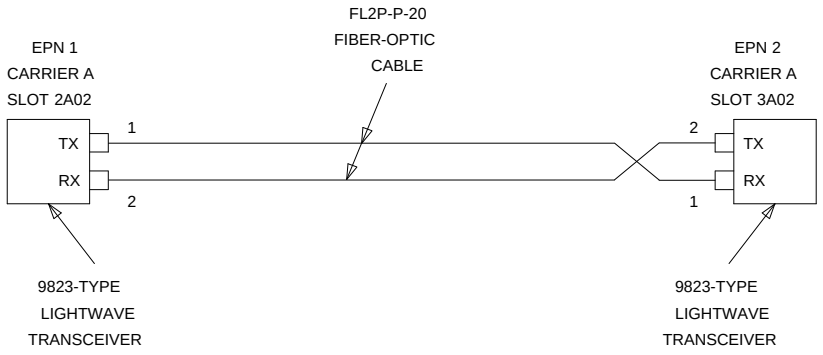

Figure 6-31. Fiber-Optic Connections EPN1 to EPN2

For One or Two Collocated Expansion Port Networks

1. Behind port carrier C of PPN cabinet 1 (see Figure 6-32, Figure 6-33, Figure 6-34, and Figure 6-35):
   - Install a 9823-type lightwave transceiver on cable connector at slot 1C02.
   - Connect one end of the fiber-optic cable to the lightwave transceiver at slot 1C02.
   - Route the fiber-optic cable from the lightwave transceiver to the cabinet's cable tray and downward out of the cabinet through the cable manager to the PDS cross-connect facility.
   - At the PDS cross-connect facility, connect the fiber-optic cable to the lightwave-interface unit provided.
   - Delicately attach the fiber-optic cable (with cable ties) to the wall of the cable tray at the built-in cable-tie positions.
2. Behind control carrier A of EPN cabinet 2:
   - Install the same kind (either 9823-A or 9823-B) of lightwave transceiver on cable connector at slot 2A01.
   - Connect the fiber-optic cable to the lightwave transceiver slot 2A01.
   - Route the fiber-optic cable from the lightwave transceiver to the cabinet's cable tray and downward out of the cabinet through the cable manager to the PDS cross-connect facility.
   - At the PDS cross-connect facility, connect the fiber-optic cable to the lightwave-interface unit provided.
   - Delicately attach the fiber-optic cable (with cable ties) to the wall of the cable tray at the built-in cable-tie positions.
   - At the top of the cabinet, coil up the surplus length of fiber-optic cable. Delicately attach the coil to the cable-tray wall with cable ties.

For Two Collocated Expansion Port Networks

1. Behind port carrier D of PPN cabinet 1:
   - Install a 9823-type lightwave transceiver on cable connector at slot 1D02.
   - Connect one end of the fiber-optic cable to the lightwave transceiver at slot 1D02.
   - Route the fiber-optic cable from the lightwave transceiver to the cabinet's cable tray and downward out of the cabinet through the cable manager to the PDS cross-connect facility.
   - At the PDS cross-connect facility, connect the fiber-optic cable to the lightwave-interface unit provided.
   - Delicately attach the fiber-optic cable (with cable ties) to the wall of the cable tray at the built-in cable-tie positions.
2. Behind control carrier A of EPN cabinet 3:
   - Install the same kind (either 9823-A or 9823-B) of lightwave transceiver on cable connector at slot 3A01.
   - Connect the fiber-optic cable to the lightwave transceiver slot 3A01.
   - Route the fiber-optic cable from the lightwave transceiver to the cabinet's cable tray and downward out of the cabinet through the cable manager to the PDS cross-connect facility.
   - At the PDS cross-connect facility, connect the fiber-optic cable to the lightwave-interface unit provided.
   - Delicately attach the fiber-optic cable (with cable ties) to the wall of the cable tray at the built-in cable-tie positions.
   - At the top of the cabinet, coil up the surplus length of fiber-optic cable. Delicately attach the coil to the cable-tray wall with cable ties.
3. Behind control carrier A of EPN cabinet 2:
   - Install a 9823-type lightwave transceiver on cable connector at slot 2A02.
   - Connect one end of the fiber-optic cable to the lightwave transceiver at slot 2A02.
   - Route the fiber-optic cable from the lightwave transceiver to the cabinet's cable tray and downward out of the cabinet through the cable manager to the PDS cross-connect facility.
   - At the PDS cross-connect facility, connect the fiber-optic cable to the lightwave-interface unit provided.
   - Delicately attach the fiber-optic cable (with cable ties) to the wall of the cable tray at the built-in cable-tie positions.

4. Behind control carrier A of EPN cabinet 3:
   - Install the same kind (either 9823-A or 9823-B) of lightwave transceiver on cable connector at slot 3A02.
   - Connect the fiber-optic cable to the lightwave transceiver slot 3A02.
   - Route the fiber-optic cable from the lightwave transceiver to the cabinet's cable tray and downward out of the cabinet through the cable manager to the PDS cross-connect facility.
   - At the PDS cross-connect facility, connect the fiber-optic cable to the lightwave-interface unit provided.
   - Delicately attach the fiber-optic cable (with cable ties) to the wall of the cable tray at the built-in cable-tie positions.
   - At the top of the cabinet, coil up the surplus length of fiber-optic cable. Delicately attach the coil to the cable-tray wall with cable ties.

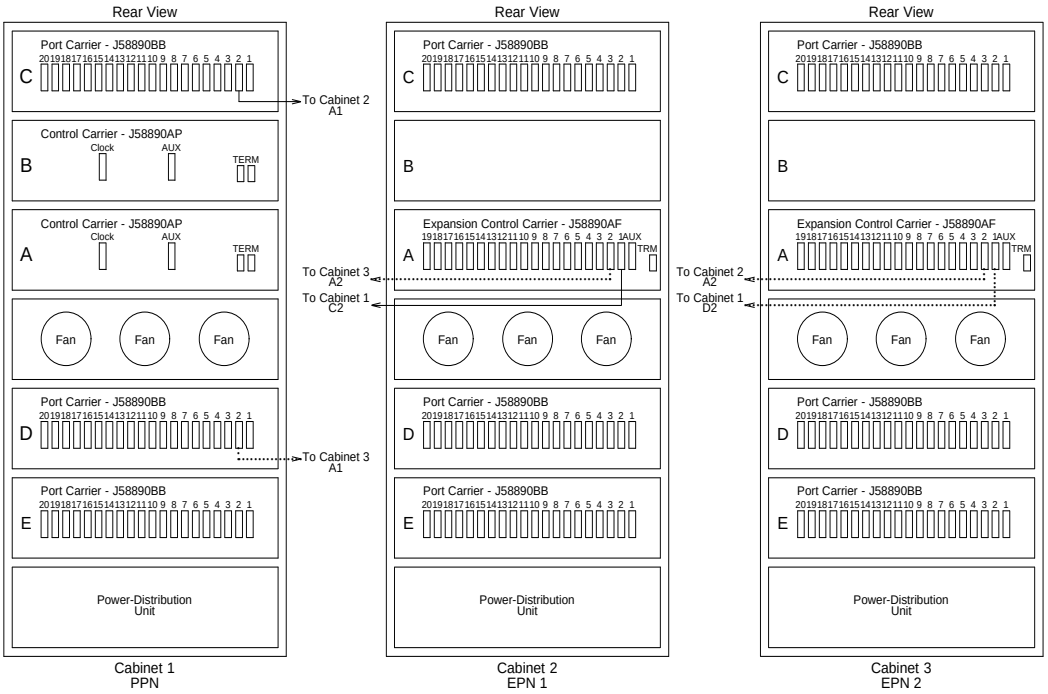

Figure 6-32. High-Reliability G3r V4 with Two or Three Port Networks

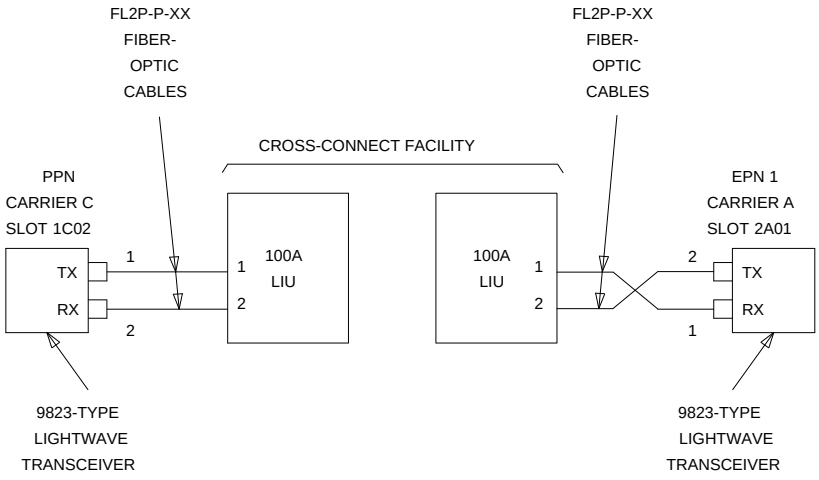

Figure 6-33. Fiber-Optic Connections PPN to EPN1

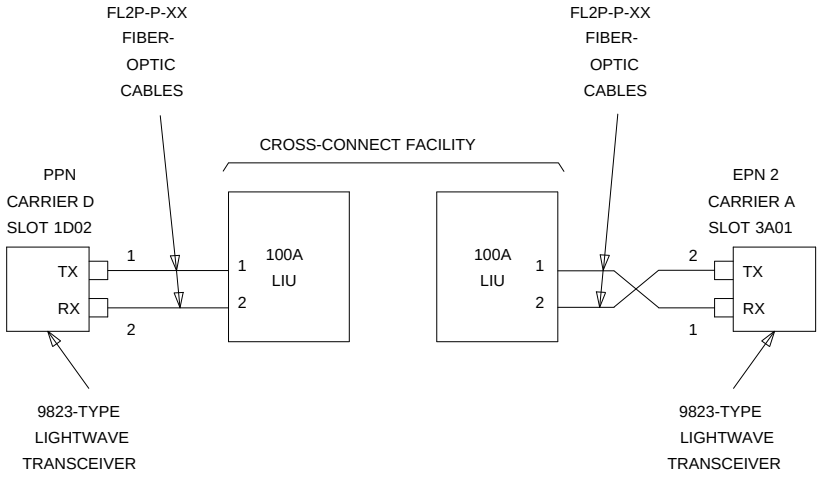

Figure 6-34. Fiber-Optic Connections PPN to EPN2

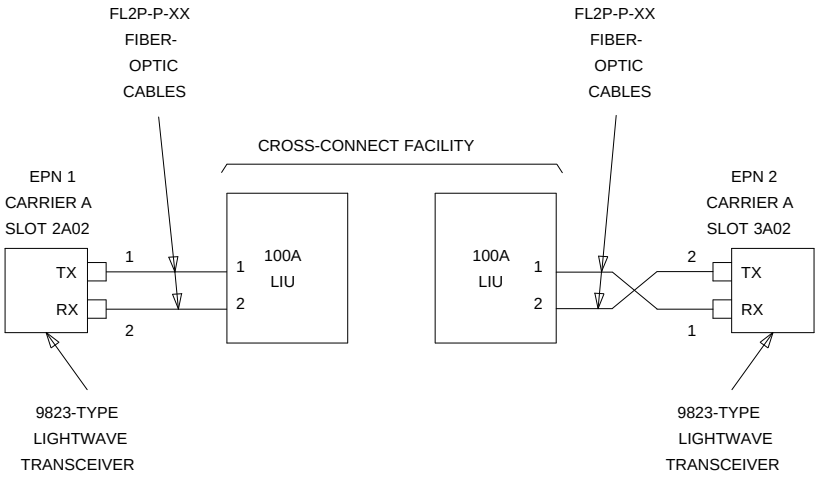

Figure 6-35. Fiber-Optic Connections EPN1 to EPN2

For One to Fifteen Switch-Connected Expansion Port Networks

1. Behind the PPN cabinet (see Figure 6-36):
   - Install a 9823-type lightwave transceiver on cable connector at slot 1E02.
   - Install a 9823-type lightwave transceiver on cable connector at slot 1C02.
   - Connect one end of the metallic intercarrier cable to the lightwave transceiver at slot 1E02.
   - Route the intercarrier cable from the lightwave transceiver to the cabinet's cable tray and upward to carrier ''C.''
   - Connect the other end of the intercarrier cable to the lightwave transceiver at slot 1C02.
   - Install a 9823-type lightwave transceiver on cable connector at slot 1E20.
   - Install a 9823-type lightwave transceiver on cable connector at slot 1D02.
   - Connect one end of the metallic intercarrier cable to the lightwave transceiver at slot 1E20.
   - Route the intercarrier cable from the lightwave transceiver to the cabinet's cable tray and upward to carrier ''D.''
   - Connect the other end of the intercarrier cable to the lightwave transceiver at slot 1D02.
   - Attach the intercarrier cables (with cable ties) to the wall of the cable tray at the built-in cable-tie positions.
2. Behind switch node carrier E of PPN cabinet 1 (see Figure 6-36):
   - For each EPN, install one 9823-type lightwave transceiver on a cable connector with the following order of slots: 1E03, 1E19, 1E04, 1E18, 1E05, 1E17, etc.
   - Connect one end of each fiber-optic cable to each lightwave transceiver, just installed.
   - Delicately attach the fiber-optic cables (with cable ties) to the wall of the cable tray at the built-in cable-tie positions.

3. Behind control carrier A of each EPN cabinet:
   - Install the same kind (either 9823-A or 9823-B) of lightwave transceiver on cable connector at slot A01.
   - Connect the other end of the fiber-optic cable to the lightwave transceiver, just installed, at slot A01.
   - Delicately attach the fiber-optic cable (with cable ties) to the wall of the cable tray at the built-in cable-tie positions.
   - At the top of the cabinet, coil up the surplus length of fiber-optic cable, and delicately attach the coil to the wall of the cable tray.

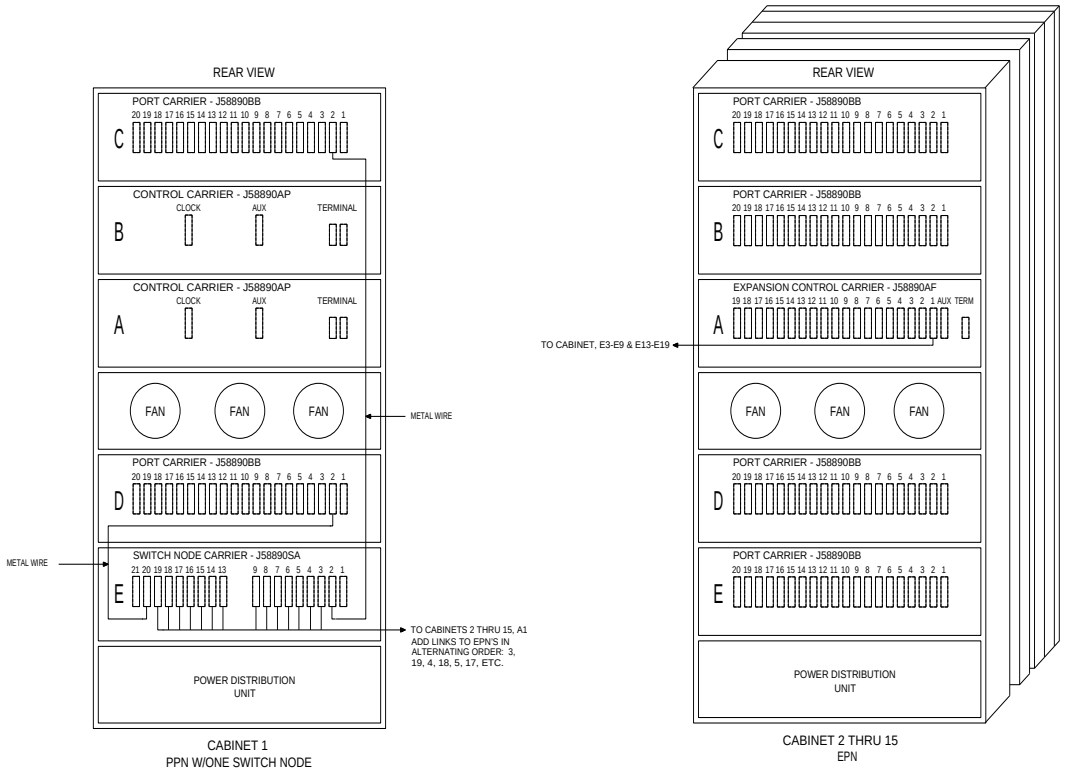

Figure 6-36. Fiber-Optic Connections through Center Stage Switch

DS1C-Remoted Cabinets

See NOTES. Digital Services 1 (DS1) facilities and associated equipment-room hardware and cabling can interconnect two port networks (PNs) located up to 100 miles apart. Although DS1 remoting always serves as a lower-bandwidth alternative to fiber remoting, DS1 remoting is especially attractive when:

- Fiber-optic cabling is unavailable to the remote site
- When the desired distance between the port networks exceeds the practical fiber limit of 25,000 feet (about 4.7 miles)
- Digital Services facilities, with enough bandwidth for interconnection, already exist between the two port networks

NOTE:
As always, these distance limitations are approximate measurements of the *actual* fiber or copper right-of-way (not of the shortest linear distance) between the two endpoints.

NOTE:
The 100-mile limit for DS1 remoting is the maximum distance between *any* two port networks in a G3r V4 system with either direct or switched port-network connections.

For example, in a *directly connected* system, a single EPN can be remoted up to 100 miles. This is because the length of the *direct* fiber connection from any port network in the local equipment room to the remote EPN is 100 miles.

However, if more than one EPN is remoted in a directly connected system, the 100-mile limit applies to any two port networks. Assuming straight cable runs, suppose that a customer wants to remote one EPN 80 miles due east and another EPN due north of the local PPN. This arrangement can only be accommodated if the second EPN resides no more than 60 miles north of the PPN. This is because the direct fiber distance between the two EPNs is also limited to 100 miles.

As another example, in *switch-connected* system with numerous port networks, one EPN might be remoted 75 miles from the switch node. If this were the case, then the maximum distance that any other EPN could be remoted would be 25 miles.

Digital public-network tie-trunk facilities provide the end-to end connectivity between the port networks. For either type of port network (PPN or EPN), a TN574 DS1 Converter (DS1C) circuit pack serves as the port-network interface to the DS1 facilities. As a PPN interface, a TN574 DS1C can reside in either:

- A port carrier (in any port slot)
- A switched node carrier (in port slot ‘‘1’’ or ‘‘21’’)

As an EPN interface, a TN574 DS1C can reside in an expansion control carrier (in any port slot).

DS1 Cabling within the Local Port Networks. See NOTE. Use the running list that accompanies the upgrade equipment to determine which cable should be connected where. The following paragraphs only provide conceptual information about wiring a DS1C interface either to an expansion interface or to a switched node interface, not step-by-step procedures for wiring a specific G3r V4 system.

NOTE:
It is important to label every cable that you install. For details, refer to the section, *Labels for Fiber-Optic Cables*, in Appendix E of the installation manual.

As shown in Figure 6-37, a cable connects each DS1C either to the appropriate TN570 expansion interface (for a direct connection to another port network) or to the appropriate TN573 SN Interface (for a switched connection to another port network). On the DS1C side, a 4C retainer binds this shielded cable to the DS1C port connector. On the EI/SNI side, a 4B retainer binds the cable to the EI/SNI port connector. The DS1C-to-EI/SNI cable also provides a piggy-back connector enabling subsequent access to the public network. Table 6-8 lists the cable numbers and lengths for the possible connections.

Table 6-8. Numbers and Lengths of DS1C-to-EI/SNI Cables

Connection Type	Comcode Number	Length
Within same carrier	846448637	1 foot
Between two carriers in same port network	846448645	5.5 feet
Between two carriers in adjacent networks	846448652, and one 846885259 bracket	1 foot (used with two 9823As, & one 20-foot fiber-optic cable)

DS1 Cabling to the Public Network. See NOTE. Use the running list that accompanies the upgrade equipment to determine which cable should be connected where. The following paragraphs only provide conceptual information about wiring a DS1C interface to a wall-field block, not step-by-step procedures for wiring a specific G3r V4 system.

NOTE:
It is important to label every cable that you install. For details, refer to the section, *Labels for Fiber-Optic Cables*, in Appendix E of the installation manual.

Figure 6-37 also shows the cabling between various port networks and the cross-connect field where the public network is accessed. If already connected to either an expansion or switched node interface, a DS1C circuit pack already resides either in an EPN expansion control carrier or in a PPN port carrier or switched node carrier.

Depending on the traffic requirements between the two port networks, a 25-foot H600-348 cable extends from the piggy-back connector (on each DS1C-to-EI/SNI cable) to from one to four channel service units (CSUs). [This cable branches to four 15-pin subminiature D-type connectors (labeled ‘‘01’’ to ‘‘04’’) to make the CSU connections.] Then, in turn, the CSU(s) are connected to the wall-field block (corresponding to the equipment location of the DS1C) at port connections ‘‘8,’’ ‘‘7,’’ ‘‘6,’’ and ‘‘5’’ (in descending order).

Neglecting overhead, this wiring arrangement can provide PN-to-PN communication at the bandwidth of up to four DS1 spans (1.544 Mbps each). Between each port network’s wall field, the port networks communicate across leased lines in the public network.

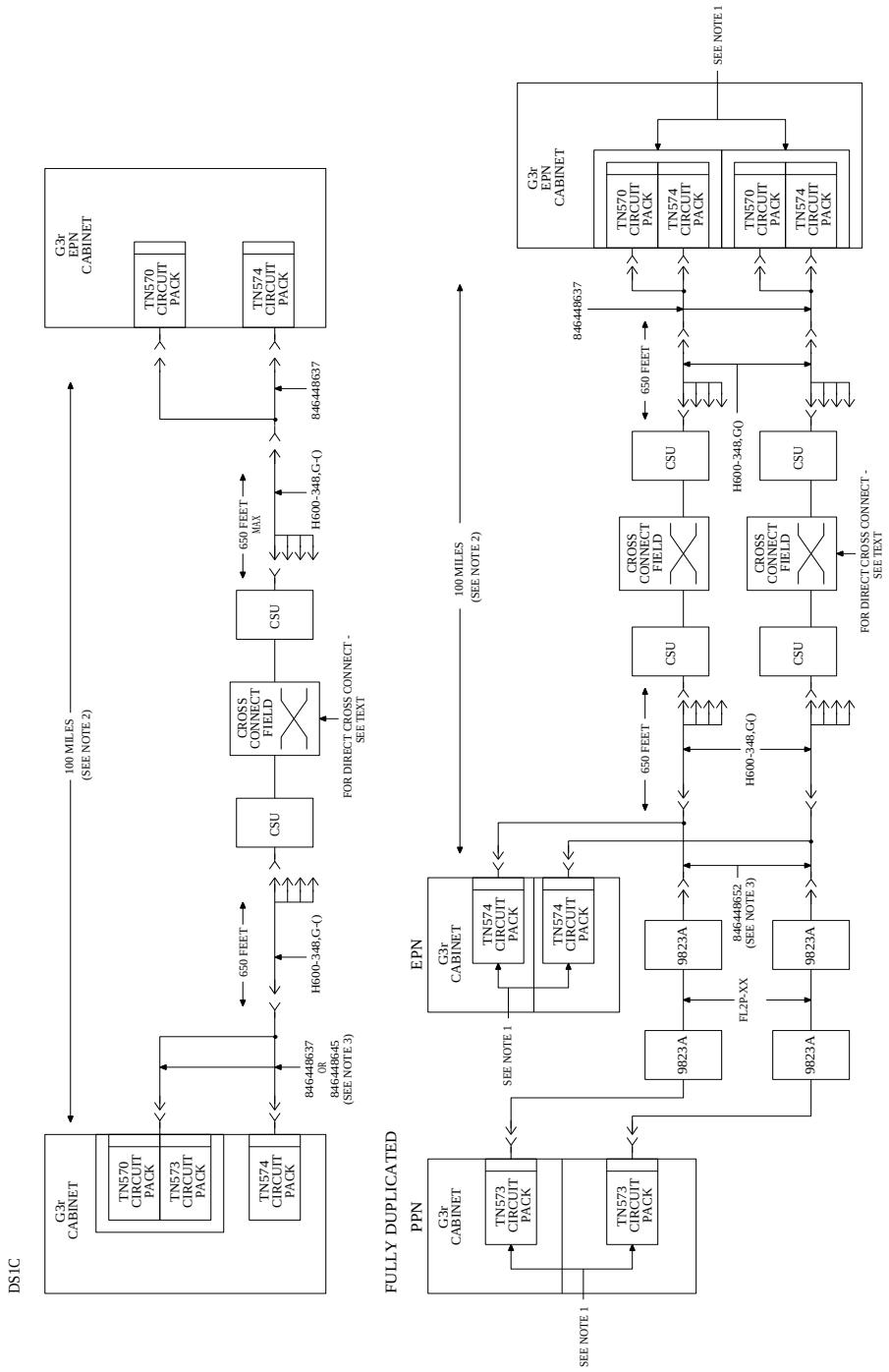

Figure 6-37. DS1 Connectivity between Remote PNs

Verify Usable Circuit-Pack Vintages

Verify that every G2 circuit pack reused in the upgrade conforms to the usable vintage requirements for a G3r V4 system (see Reference Guide for Circuit-Pack Vintages and Change Notices).

Install System Access Ports

As a prerequisite for connecting various endpoints that use EIA interfaces to the G3r V4 system, install the up to eight loop-around connections for Mode 2-to-Mode 3 (and vice versa) data conversion.

From the *outgoing* perspective of the system communicating with an EIA endpoint, these loop-around connections convert Mode 3 data (circuit-switched packet data, with undefined bit rates and packet specifications) to Mode 2 data (low-speed, usually asynchronous, data at rates of 300 to 19,200 bps) by:

- Accepting Mode 3 data off the LAN bus (from the SPE) at a TN553 Packet Data Line circuit pack, where Mode 3-to-Mode 2 conversion is done
- Routing the converted data through the cross-connect field and back to a TN726B Data Line where the equivalent Mode 2 data can access the TDM bus, for subsequent routing to an EIA endpoint

The endpoints that use these EIA interfaces and, therefore, require the Mode 2-to-Mode 3 conversion include:

- DEFINITY Communications System Generic 3 Management Applications (G3-MA)
- Remote DEFINITY Communications System Generic 3 Management Terminal (G3-MT)
- Basic Call Management System (BCMS) terminal
- Call Detail Recording Unit (CDRU)/Centralized Attendant Service Plus (CAS+)
- Property Management System (PMS)
- Printers

The following figures show this loop-around configuration and how the B25A cables are cross-connected.

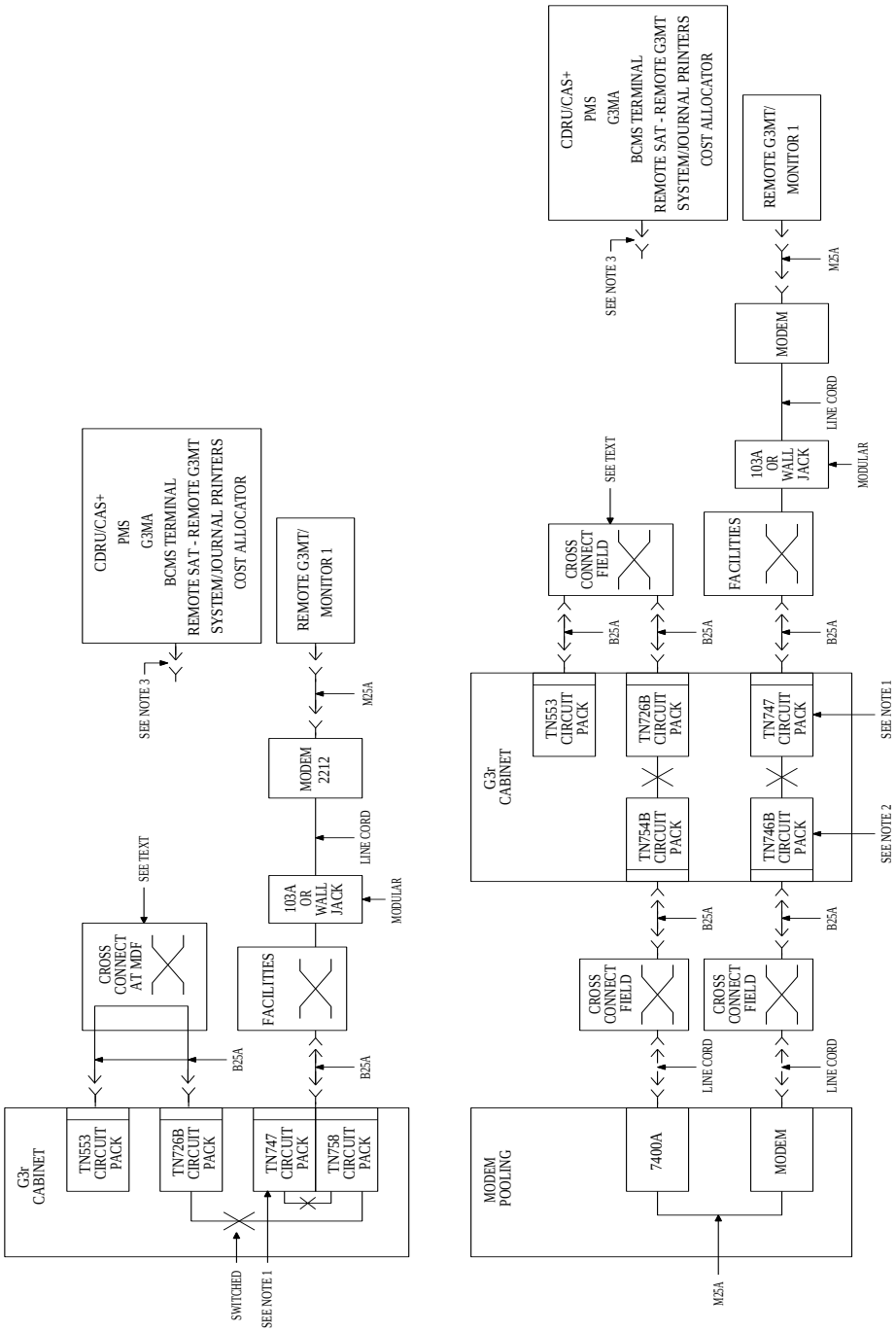

Figure 6-38. Connections: CDRU/CAS+, PMS, BCMS, Printers, G3-MA/MT

Pinouts for the TN553 and TN726B circuit packs shown cross-connected in the preceding figure are given in the table below.

Pinouts

TN553 (12 Ports)

1	26	
2	27	1
3	28	
4	29	2
5	30	
6	31	3
7	32	
8	33	4
9	34	
10	35	5
11	36	
12	37	6
13	38	
14	39	7
15	40	
16	41	8
17	42	
18	43	9
19	44	
20	45	10
21	46	
22	47	11
23	48	
24	49	12
25	50	G

TN726B (8 Ports)

1	26	Blank
2	27	
3	28	1
4	29	Blank
5	30	
6	31	2
7	32	Blank
8	33	
9	34	3
10	35	Blank
11	36	
12	37	4
13	38	Blank
14	39	
15	40	5
16	41	Blank
17	42	
18	43	6
19	44	Blank
20	45	
21	46	7
22	47	Blank
23	48	
24	49	8
25	50	Blank

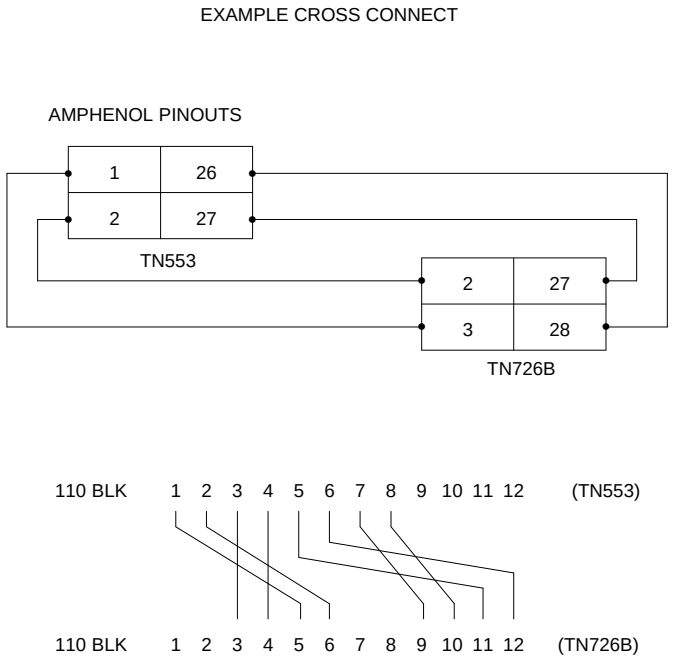

Figure 6-39. Example of Cross Connect between TN553 and TN726B

Remove Power-Failure Ground Strap

Remove the ground strap from the power-failure transfer unit.

Boot the G3r V4 System

1. Connect the G3-MT to the connector labeled ‘‘TERMINAL’’ behind PPN control carrier ‘‘A,’’ or install the G3-MA according to the ‘‘Set Up G3-MA’’ chapter of *DEFINITY Communications System Generic 3 Management Applications — Operations*, 585-229-202.
2. Verify that the new G3r V4 system tape is inserted in the PPN cabinet.
3. At each EPN power-distribution unit, set the main circuit breaker to ON.
4. At the PPN power-distribution unit, set the main circuit breaker to ON.
5. The system now goes through the reset level 4 rebooting process, loading the system translations from the preformatted disk. Rebooting requires 5 to 11 minutes.

Refer to ‘‘Initialization and Recovery’’ and ‘‘LED Interpretation’’ chapters in *DEFINITY Communications System Generic 3r V4 Maintenance*, 555-230-105, Issue 4, for circuit-pack LED indications and screen displays that occur during system reboot.

6. Get the order number of the upgrade, and call the regional CSA to request an ‘‘init’’ login so that right-to-use options can be enabled on the upgraded system.
7. Set the time to ensure that the system is booted properly.
8. Enter **`change sys cust`**. Press (RETURN). Use this form to assign the customer’s right-to-use options on the G2-to-G3r V4 upgrade order.
9. Enter **`logoff`**. Press (RETURN). (After assigning the customer’s right-to-use options, another log-in process is required.)
10. Log in as ‘‘craft’’ at the `login:` prompt on the G3-MT. (After assigning the customer’s right-to-use options, the ‘‘init’’ log-in privileges are no longer necessary.)
11. Enter **`change site-data`**. Press (RETURN). Use this form to assign system-specific information (for example building, floor, stations, etc.)
12. Enter **`change cabinet 1`**. Press (RETURN). Use this form to assign the appropriate carrier types for port network 1.
13. Enter **`change sys dup`**. Press (RETURN). Use this form to enable high reliability (SPE duplication) or critical reliability (SPE and PNC duplication) for the system.
14. Enter **`save translation disk`**. Press (RETURN). This command instructs the system to write all translation information from memory to the disk.
15. Enter **`reset system 3`**. Press (RETURN). The system now goes through the reset level 3 rebooting process, reloading translations to activate the duplication option.
16. Log in as ‘‘craft’’ at the `login:` prompt on the G3-MT.
17. After about eight minutes, enter **`status spe`**. Press (RETURN). This command can provide state-of-health information for both system processors (SPEs). Verify that the standby SPE is refreshed and that the standby disk is in service.
18. Enter **`save translation disk`**. Press (RETURN). This command instructs the system to write all translation information from memory to both disks.

Close Upgraded EPN Cabinet and Reconnect Cables

1. At the power-distribution unit of the upgraded EPN, set the main circuit breaker to OFF.

   NOTE:
   Powering down an EPN without powering down the PPN will set off alarms. However, these alarms should clear after power is restored to each EPN.

2. Temporarily disconnect the lightwave transceivers and fiber-optic cables, already labeled, from the appropriate carriers.
3. Replace the back doors or back panels previously removed.
4. At the EPN cabinet, reconnect the lightwave transceivers, fiber-optic cables, and the connector cables associated with the carrier being replaced.
5. Install the front door on the EPN cabinet if previously removed.

Power Up the EPN Cabinets

1. At each EPN power-distribution unit, set the main circuit breaker to ON.

   After about 40 seconds, EPN power and PPN/EPN communications return.

2. After power returns to each EPN and all trouble is cleared, verify that the EMERGENCY TRANSFER CONTROL switch is set to AUTO. This restores the system to the normal mode.

Retranslate Port Circuits

If port circuit packs in the G2 module control carrier were relocated in order to put:

- A critical port circuit pack, requiring longer nominal battery holdover (e.g., a DS1 or an Announcement circuit pack), in a port slot
- A TN736, TN752, or TN755 power supply in port slots ‘‘18’’ and ‘‘19’’
- A TN570 Expansion Interface in port slot ‘‘1’’
- A TN570 in port slot ‘‘2’’ (for a second directly connected EPN)

of the new expansion control carrier, they must be retranslated now. Refer to *DEFINITY Communications System Generic 3 V4 Implementation*, 555-230-653, for instructions on performing the retranslations.

Run Acceptance Tests

Refer to Chapter 11 of *DEFINITY Communications System Generic 1 and Generic 3 Installation and Test*, 555-230-104, Issue 5, and perform the appropriate tests.

Register System as G3r V4

Get the serial number of the new G3r V4 PPN, and call the INADS Database Administrator at the Technical Service Center (1-800-248-1111) to register the upgraded system as a G3r V4.

Return Replaced G2 Equipment

The G2 equipment replaced, during the upgrade to G3r V4, should be returned to AT&T according to the requirements outlined in:

BCS/Material Logistics, MSL/Attended Stocking Locations

Methods and Procedures for Basic Material Returns

The replaced G2 equipment includes:

- G2 common control (CC) cabinet, carriers, and circuit packs and G2 time-multiplexed switch (TMS) cabinet, carriers, and circuit packs

  or

  G2 CC/TMS cabinet, carriers, and circuit packs
- G2 traditional module cabinets, carriers, and circuit packs
- G2 universal module control carriers (J58890AK) and control circuit packs
- G2 tape cartridges
- 4-series lightwave transceivers

Critical-Reliability G2 to Critical-Reliability G3r V4

Refer to *DEFINITY Communications System Generic 1 and Generic 3 Installation and Test*, 555-230-104, Issue 5, to install the new PPN cabinet.

If traditional modules are being replaced by EPNs, refer to *DEFINITY Communications System Generic 1 and Generic 3 Installation and Test*, 555-230-104, Issue 5, to install the new EPNs.

Upgrade Cabinets

An existing universal-module cabinet is always upgraded to an EPN. Upgrade the cabinets using the following procedures.

A critical-reliability G2 universal module is upgraded to a critical-reliability G3r V4 EPN by:

- Removing the module control carrier in position ‘‘A’’
- Installing the J58890AF expansion control carrier in position ‘‘A’’
- Removing the module control carrier in position ‘‘B’’
- Installing the J58890BB-3 port carrier in position ‘‘B’’
- Adding the G3r V4 circuit packs
- Restructuring the port circuits as required

Prerequisite Hardware

The equipment in Table 6-9 *must* be on-site before the upgrade begins. Ensure that the tapes are G3r V4 tapes.

To place a claim for missing equipment, as part of the Streamlined Implementation process, call ‘‘1-800-772-5409,’’ and respond to the call prompter.

Table 6-9. Required Hardware

Equipment	Description	Quantity
PEC 6300-07X[U]	Processor Port Network	1
J58890AF	Expansion Control Carrier	1
J58890BB-3	Port Carrier	1
106647985	TN775B Maintenance	1
103281788	TN570 Expansion Interface	w/o CSS: 4 or 12 (Note 1) w/CSS: 2 per port network
103281812	TN573 Switched Node Interface	w/CSS: 2 per port network
J58890TF	Tape Cartridge	4
H-600-204 G1		2 (Note 2)
63300A	FL2P-P-XX Fiber Cable	w/o CSS: 2 or 6 (Note 3) w/CSS: 2 per EPN
H600-278 G1	EI-to-SNI Metallic Cable	w/CSS: 2
106455348 or 106455363	9823-A Lightwave Transceiver 9823-B Lightwave Transceiver	w/o CSS: 4 or 12 (Note 4) w/CSS: 4 per EPN w/o CSS: 4 or 12 (Note 4) w/CSS: 4 per EPN
106689516	TN771D Maintenance Test	1 or 2 (Note 5)

Notes:

1. Depending on the number of G3r V4 EPNs. Four are required for a critical-reliability system with two port networks; twelve with three port networks. Either two or eight TN570s are shipped loose with the EPN equipment. The factory has installed the other two or four TN570s in the new PPN.
2. Required for an EPN in a critical-reliability system.
3. Depending on the number of G3r V4 EPNs. Four or twelve are required if the EPNs and the PPN are remotely located. Assuming acceptable lengths, the fibers that previously connected an upgraded G2 universal module (*not* a traditional module) to the G2 TMS have the correct transceiver connectors and, therefore, can be reused.
4. One pair for each fiber connection. For each connection, one 9823-type lightwave transceiver is installed in an EPN, and one in the PPN. Two 9823-type transceivers can be reused from each upgraded G2 universal module. Additional 9823-type transceivers, ordered separately, are also shipped loose with the EPN equipment.
5. Depending on the number of G3r V4 EPNs.

Required Tools

The following tools and items may be required during the upgrade:

- High-intensity flashlight or AC drop light
- 3/8-inch flat-blade screwdriver with a 10-inch shank (minimum)
- 5/16-inch and 1/4-inch sockets with a ratchet and 10-inch extension
- Power screwdriver (optional)
- Long-nose pliers to disconnect grounding straps and straighten backplane pins
- Static-proof or original circuit-pack packaging for transporting circuit packs
- Labels for identifying the port circuit packs and cables attached to the rear of cabinets
- Receptacle for holding approximately 100 self-tapping screws
- 12 spare #12 and #10 self-tapping screws
- 4 spare carrier grounding straps
- Authorized wrist grounding strap
- Repair kit for backplane pins (KS-22876 L2 or equivalent)
- One copy of each of the following manuals:
  - *DEFINITY Communications System Generic 3r V4 Maintenance*, 555-230-105, Issue 3
  - *DEFINITY Communications System Generic 3 V4 Implementation*, 555-230-653

Preventive Maintenance

During the G3r V4 upgrade, follow routine preventive maintenance procedures on the system to be upgraded. For information about the procedures and necessary equipment, refer to the “Preventive Maintenance’’ section in *DEFINITY Communications System Generic 3r V4 Maintenance*, 555-230-105, Issue 4.

Verify System Status

Before proceeding, the system should be examined for alarms, and every problem should be corrected. The system must be alarm-free.

Label Cables

To make reconnecting the cables simpler and more reliable, label both ends of the connector cables associated with the carrier to be removed (if not already labeled).

Power Down G2 System

At the power-distribution unit, set the main circuit breaker to OFF.

Install Power-Failure Transfer Ground Strap

CAUTION:
To avoid contaminating single-point ground, do not connect the ground strap while the system is powered up.

1. Connect a strap's lead either to pin 49 of the connecting block or to pin 49 of the CAP (cable access panel) associated with the power-failure transfer panel.
2. Route the other lead to an approved ground source.
3. Connect the lead to the approved ground source.

Remove Doors and Panels and Disconnect Cables

1. Remove the front door from the cabinet (if desired).
2. With the cable retainer in front of you and the part number visible (4B or 4C), locate the slot that is almost vertical. This slot is adjacent to the part number. Insert a flat-blade screwdriver with a wide blade (1/4-inch recommended) into the slot. Twist the screwdriver while the blade is in the slot. The retainer will snap open easily, and the cable can be removed.
3. Disconnect previously labeled cables associated with the carrier to be removed.
4. Behind a ''DEFINITY style'' cabinet, remove the back doors from the cabinet.
5. Behind a previously upgraded cabinet, remove all of the back panels. (Two different types of screws hold the back panels to the cabinet. The #10 screws can be removed with a screwdriver or a 1/4-inch socket. The #12 screws can be removed with a screwdriver or a 5/16-inch socket.)

Remove Circuit Packs from Module Control Carriers A and B

1. To ensure that power units in the ‘‘A’’ and ‘‘B’’ carriers are properly replaced, label each power unit with its slot number.
2. Disconnect the power cords from the power units in the ‘‘A’’ and ‘‘B’’ carriers.
3. See WARNING. Remove all circuit packs and power units from carrier ‘‘A.’’ Store the circuit packs in the static-proof packaging.
4. See WARNING. Remove all circuit packs from carrier ‘‘B.’’ Store the circuit packs in the static-proof packaging.

   WARNING:
   Before inserting or removing a circuit pack from a cabinet, put on a wrist strap and attach its plug or clip to the cabinet’s frame.

5. Remove the circuit-pack blanks from slots that do not contain circuit packs.
6. Remove the front trim plate from the ‘‘B’’ carrier by pulling straight off. Then remove the front trim plate from the ‘‘A’’ carrier.

Remove CURL from Module Control Carrier A

See NOTES. Remove the CFY1 current limiter (CURL) from the pin-field block marked ‘‘CURL’’ on the ‘‘A’’ carrier. The CURL is reused in the G3r V4 EPN.

NOTE:
Note the position of the components on the left side of the CURL.

NOTE:
Verify the CURL meets the minimum usable vintage requirements.

Remove Module Control Carriers A and B

1. See the following CAUTION and NOTE. Remove the TDM/LAN cable from between the ‘‘A’’ and ‘‘B’’ carriers (see Figure 6-40). This cable will be reused.
2. See CAUTION and NOTE. Disconnect one end of the TDM/LAN cable (between the ‘‘A’’ and ‘‘D’’ carriers) from the ‘‘A’’ carrier. Leave the other end connected to the ‘‘D’’ carrier, and move the cable into a position so that it will not interfere with removing the ‘‘A’’ carrier.
3. See CAUTION and NOTE. Disconnect one end of the TDM/LAN cable (between the ‘‘B’’ and ‘‘C’’ carriers) from the ‘‘B’’ carrier. Leave the other end connected to the ‘‘C’’ carrier, and move the cable into a position so that it will not interfere with removing the ‘‘B’’ carrier.

CAUTION:
When removing the TDM/LAN cables from a previously upgraded carrier, be careful that none of the short pieces of shrink tubing come off the four corner pins of the pin-field block. Otherwise, when the new equipment is connected, -48 volts could short to ground.

NOTE:
Note the position of the TDM/LAN cable before disconnecting.

4. Remove the eight ground straps from between the ‘‘A’’ and ‘‘B’’ carriers (see Figure 6-41). Retain these straps since they will reconnected to the new ‘‘A’’ and ‘‘B’’ carriers.
5. Disconnect one end of the eight ground straps (between the ‘‘A’’ and ‘‘D’’ carriers) from the ‘‘A’’ carrier (see Figure 6-41. These straps will be reconnected to the new ‘‘A’’ carrier.
6. Disconnect one end of the eight ground straps (between the ‘‘B’’ and ‘‘C’’ carriers) from the ‘‘B’’ carrier (see Figure 6-41). These straps will be reconnected to the new ‘‘B’’ carrier.
7. Disconnect the ‘‘P1’’ (small 9-pin) connector and the ‘‘P2’’ (large 38-pin) connector from the ‘‘A’’ carrier (see Figure 6-42). Move the cables into a position where they will not interfere with removing the carrier.
8. Slide the latch up, and disconnect the ‘‘P1’’ (small 9-pin) connector from the ‘‘B’’ carrier (see Figure 6-42). Move the cable into a position where it will not interfere with removing the carrier.
9. Disconnect and remove the ICC cables (see Figure 6-40). They will not be reused.
10. Remove the fan trim plate by pulling straight off.
11. Clean or replace the air filter (403326820) if necessary.

12. In front of carrier, remove the four screws (top two first) holding the ‘‘B’’ carrier to the cabinet frame. Use a long-handle screwdriver or 5/16-inch socket with a 10-inch extension.
13. Behind the carrier in a ‘‘DEFINITY style’’ cabinet, remove the two screws holding the ‘‘B’’ carrier’s rear connector panel to the cabinet frame.
14. See CAUTION. Slide the carrier forward 1 to 2 inches; then, from the back, be sure that no cables or wiring harnesses are caught on the cabinet/carrier framework.

    CAUTION:
    Cables and wiring harnesses can be damaged if they catch on the framework and if too much pressure is applied in removing the carrier.

15. Remove the carrier by sliding it out the front of the cabinet.
16. Repeat Steps 12 through 15 for the ‘‘A’’ carrier.

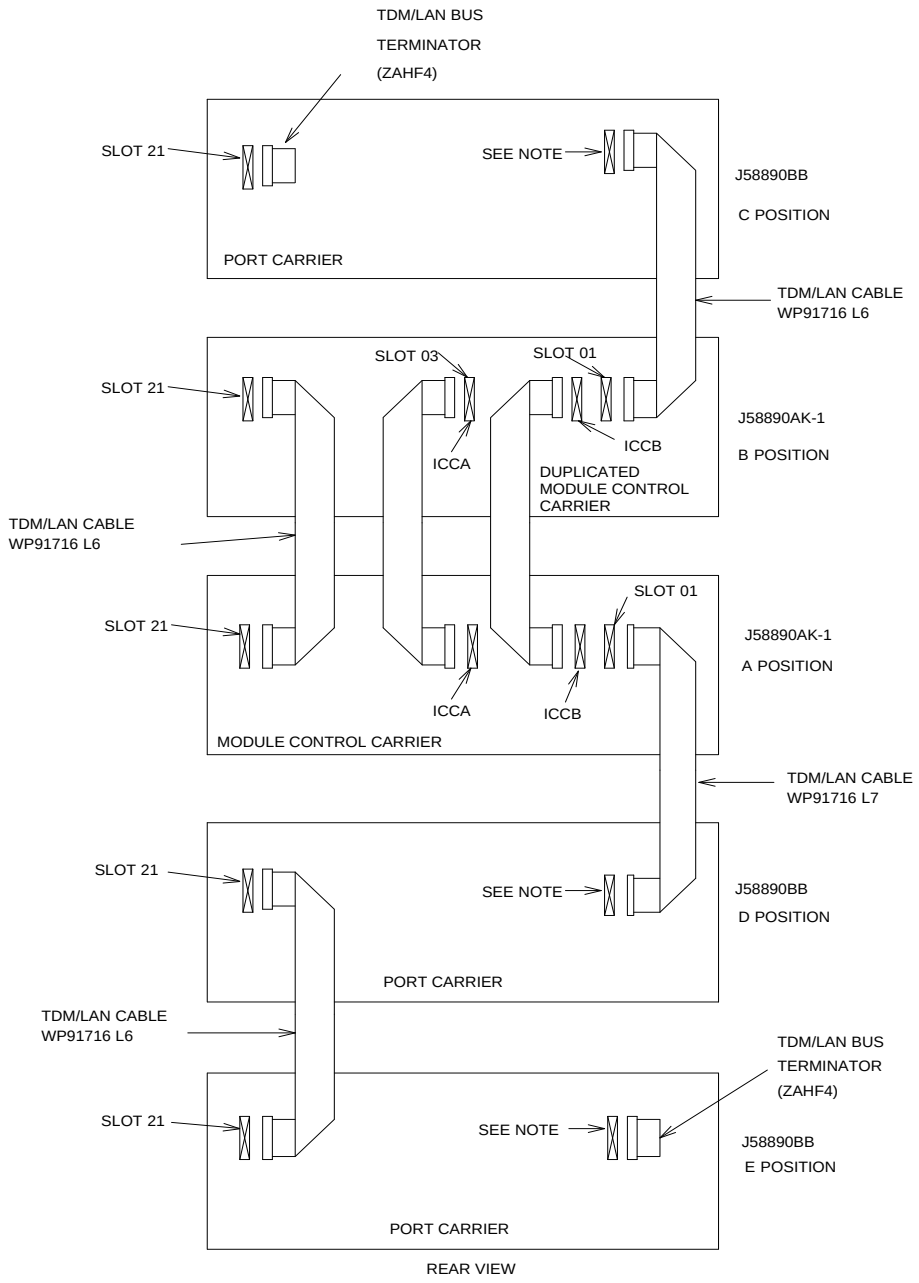

NOTE:
ON PORT CARRIER J58890BB-1, CONNECT THE TDM CABLE OR TDM TERMINATOR TO SLOT 02.
ON PORT CARRIERS J58890BB-2 AND J58890BB-3, CONNECT THE TDM CABLES OR TDM TERMINATOR TO SLOT 01. IF THE PORT CARRIER HAS J58890BB-1 AND J58890BB-2 STENCILLED ON IT, TREAT IT AS J58890BB-1.

Figure 6-40. TDM/LAN Connections for Duplicated G2 Universal Module

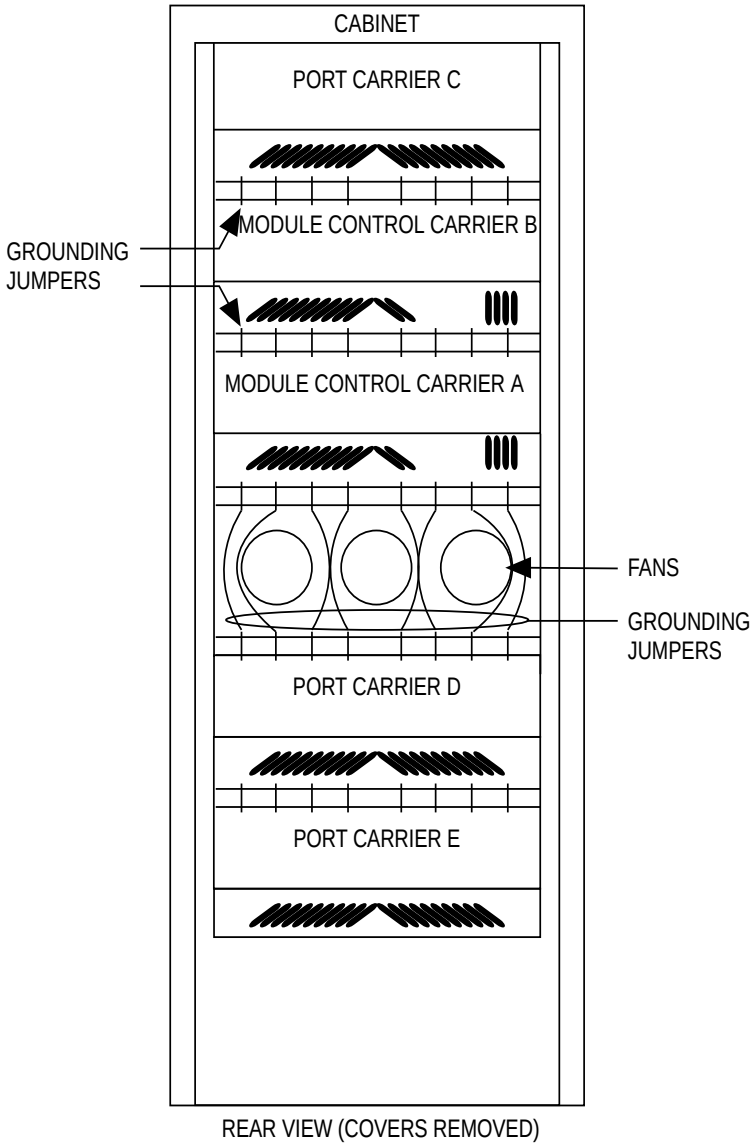

Figure 6-41. Locations of Grounding Jumpers

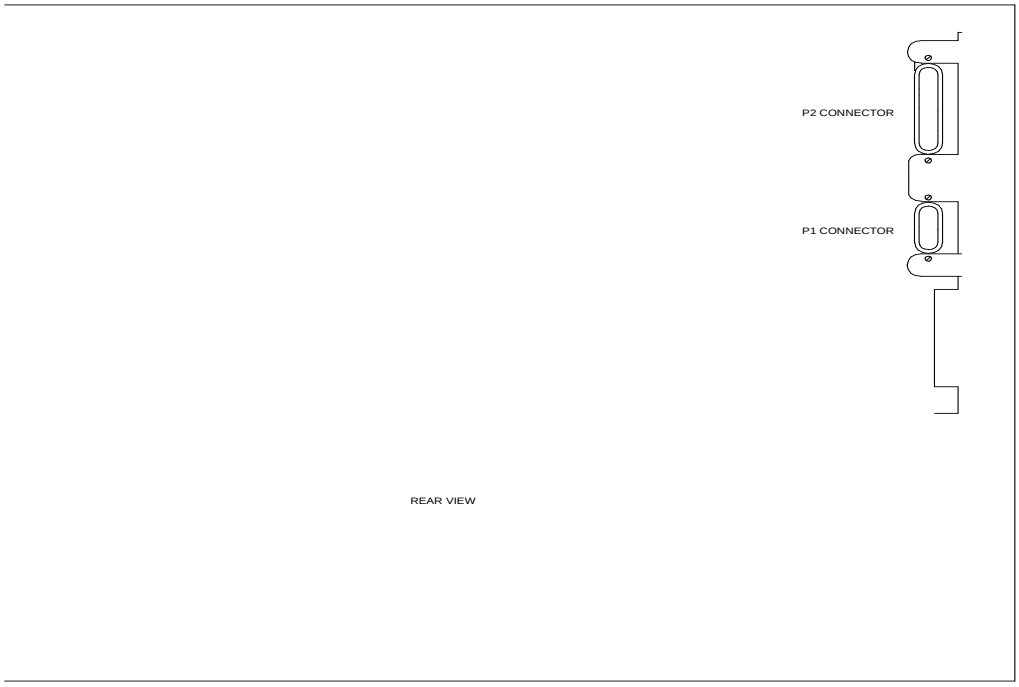

Figure 6-42. Location of P1 and P2 Connectors

Prepare the New A and B Position Carriers

1. Visually inspect the new carriers for any damage. Verify that the backplane pins are not bent.
2. Place the expansion control carrier on the floor so that the rear of the carrier faces up.
3. Install the CFY1 current limiter (CURL) on the ‘‘A’’ carrier to the pin-field block marked ‘‘CURL.’’ The CURL is inserted with the components on the left side as viewed from the rear.
4. At the rear connector panel, determine which connectors will have a cable attached, and install a 4B cable retainer on each of these connectors.

Install the New A and B Position Carriers

1. Install the J58890AF expansion control carrier in position ‘‘A’’ by lining up the plastic alignment tips on the top rear of the carrier with the screw holes in the cabinet. These alignment tips will support the carrier while the screws are being replaced. Ensure that the power cords are properly placed in the slots at the sides of the carrier.
2. See CAUTION. Fasten the carrier into position with four self-tapping screws saved from the removal of the old carrier.

   CAUTION:
   Carefully realign the threads on the self-tapping screws by turning them clockwise a turn or two before tightening them to avoid stripping the threads out of the framework.

3. Behind the carrier in a ‘‘DEFINITY style’’ cabinet, replace the two screws saved from the removal of the old carrier.
4. Install the J58890BB-3 port carrier in position ‘‘B’’ by lining up the plastic alignment tips on the top rear of the carrier with the screw holes in the cabinet. These alignment tips will support the carrier while the screws are being replaced. Ensure that the power cords are properly placed in the slots at the sides of the carrier.
5. See previous CAUTION. Fasten the carrier into position with four self-tapping screws saved from the removal of the old carrier.
6. Connect the ‘‘P2’’ and “P1’’ (large and small) connectors to the ‘‘A’’ carrier. If necessary, to get enough slack in the cables, cut the tie wrap holding the intercabinet cables from the upright in the area of the carrier being installed. Snap the connector lock into place to ensure the connection is properly made (see Figure 6-42).

7. Connect the ‘‘P1’’ (small) connector to the ‘‘B’’ carrier. To get enough slack in the cables, cut the tie wrap holding the intercabinet cables from the upright in the area of the carrier being installed. Snap the connector lock into place to ensure the connection is properly made (see Figure 6-42).
8. Connect the eight ground straps from the ‘‘D’’ carrier to the new ‘‘A’’ carrier (see Figure 6-41). These straps were left connected to the ‘‘D’’ carrier.
9. Connect the eight ground straps from the ‘‘C’’ carrier to the new ‘‘B’’ carrier (see Figure 6-41). These straps were left connected to the ‘‘C’’ carrier.
10. Install the eight ground straps between the new ‘‘A’’ and ‘‘B’’ carriers (see Figure 6-41). These straps were removed from the old carriers.
11. See NOTE. For an AC-powered expansion control carrier, install the two new carrier-ground straps. One strap connects ground point ‘‘1’’ to the A-carrier frame (on the right side), and the other connects ground point ‘‘8’’ to the A-carrier frame (on the left side).

    NOTE:
    DC-powered carriers do not use these carrier-ground straps.

12. Connect the loose end of the TDM/LAN cable (between the ‘‘A’’ and ‘‘D’’ carriers) to the pin-field block marked ‘‘TDM’’ on the right side of the ‘‘A’’ carrier (see Figure 6-43 and Table 6-10). The other end remained connected to the ‘‘D’’ carrier when the old carrier was removed.
13. Connect the loose end of the TDM/LAN cable (between the ‘‘B’’ and ‘‘C’’ carriers) to the pin-field block marked ‘‘TDM’’ on the right side of the ‘‘B’’ carrier. The other end remained connected to the ‘‘C’’ carrier when the old carrier was removed.
14. Install the TDM/LAN cable between the ‘‘A’’ and ‘‘B’’ carriers. The cable is connected to the ‘‘A’’ and ‘‘B’’ carriers at the pin-field blocks marked ‘‘TDM’’ on the left side of each carrier.

Table 6-10. TDM/LAN Connections

‘‘J’’ Number	Carrier Type	LHS Slot	RHS Slot
J58890BB-1	Port	21	02
J58890BB-2	Port	21	01
J58890BB-3	Port	21	01
J58890AF	EPN Control ‘‘A’’	21	02

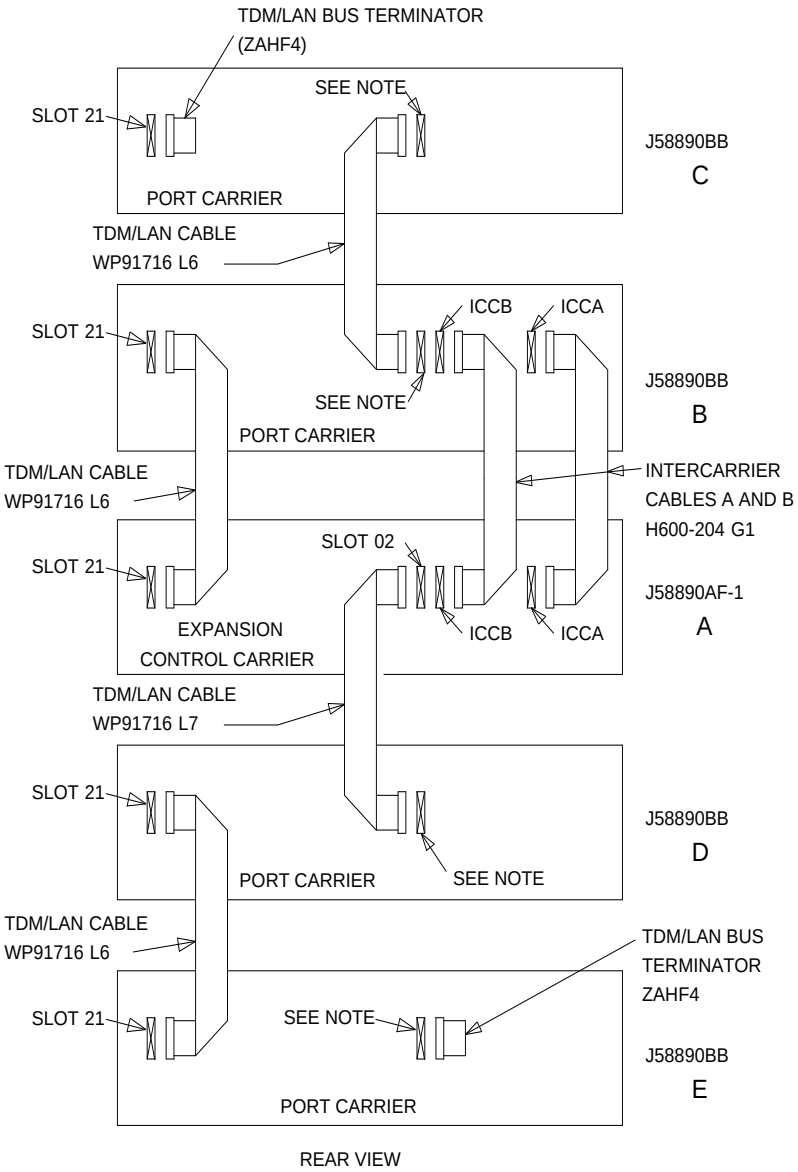

NOTE:
ON PORT CARRIER J58890BB-1, CONNECT TDM/LAN CABLE OR TDM/LAN TERMINATOR TO SLOT 02.
ON PORT CARRIERS J58890BB-2 AND -3, CONNECT THE TDM/LAN CABLE OR TDM/LAN TERMINATOR TO SLOT 01.

Figure 6-43. TDM/LAN Connections for Critical-Reliability G3r V4 EPN

15. Install the front trim plates; first on the ‘‘A’’ carrier, and then on the ‘‘B’’ carrier.

16. See CAUTION. Install the ICC cables (H600-204 G1) between carriers “A’’ and ‘‘B.’’ Connect the cables to the ‘‘ICC’’ pin-field block on both carriers (see Table 6-11 and Figure 6-44 and Figure 6-45). The cable is installed so that the dark red, blue, or purple stripe (depending on the supplier) is on the bottom at both ends.

    CAUTION:
    While installing the ICC cable connectors, be careful not to bend any backplane pins. Double check each connection to verify that the pins are straight.

17. Install the power units (removed from G2 universal module) into the ‘‘A’’ carrier. There are four different pairs of power units available. They are the 631AR1 and 631BR1, the 631WA1 and 631WB1, the 631DA1 and 631DB1, and the 644A and 645B.

    Do not interchange the physical locations of the units. The 631AR1, 631WA1, 631DA1 or 644A are installed in the left side, while the 631BR1, 631WB1, 631DB1 or 645B are installed in the right side (see Figure 6-46).

18. If the expansion control carrier contains a 631BR1, 631WB1, or 645B power unit, install the previously removed TN736 power unit in port slots ‘‘18’’ and ‘‘19’’ of the carrier (adjacent to the 631BR1, 631WB1, or 645B). If the system is equipped for neon message waiting, a TN752 or TN755 power unit must be used.

    NOTE:
    The TN736 is not required when the 631DB1 or 645B power unit is used in the J58890AH control carrier or the J58890BB-2 or J58890BB-3 port carriers. It is required in the J58890BB-1 port carrier regardless of which 631 power unit is provided. Use the TN752 or TN755 if the system is equipped with neon message waiting.

19. Connect the power cords to the power units. The power cords are the white cables equipped with plugs that are run through the slots in the front of each carrier (see Figure 6-47).

Table 6-11. Intercarrier Cable Connections

Connect ICC Cables				
	From		To	
	Carrier	Pin-Field Block	Carrier	Pin-Field Block
EPN	J58890AF	ICCA	J58890BB	ICCA
		ICCB		ICCB

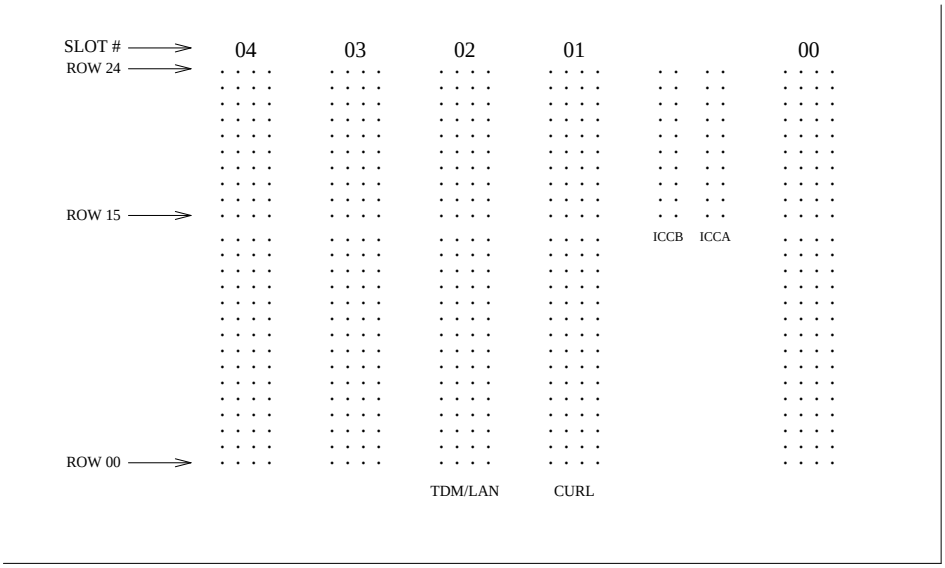

Figure 6-44. ICC Connections for Expansion Control Carrier

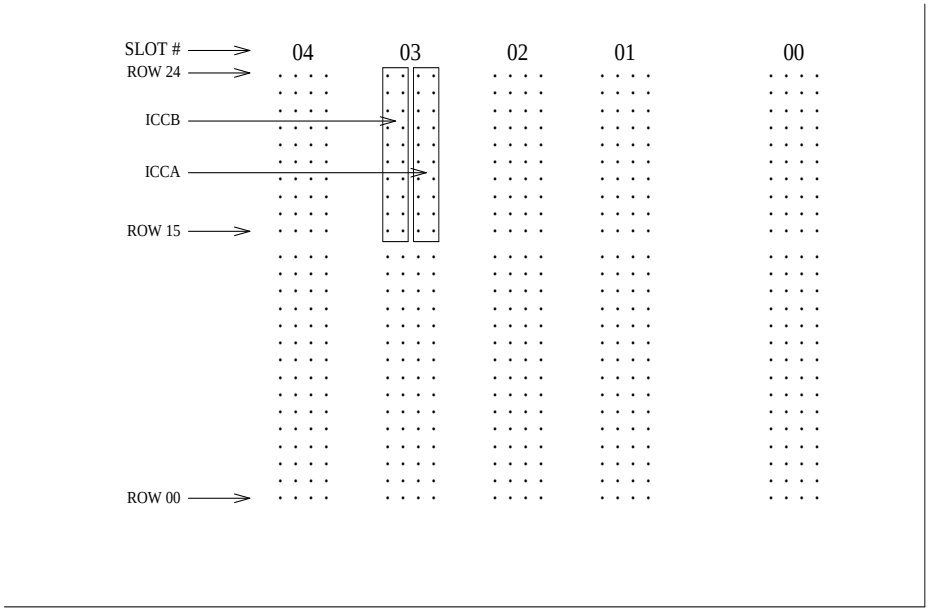

Figure 6-45. ICC Connections for Port Carrier

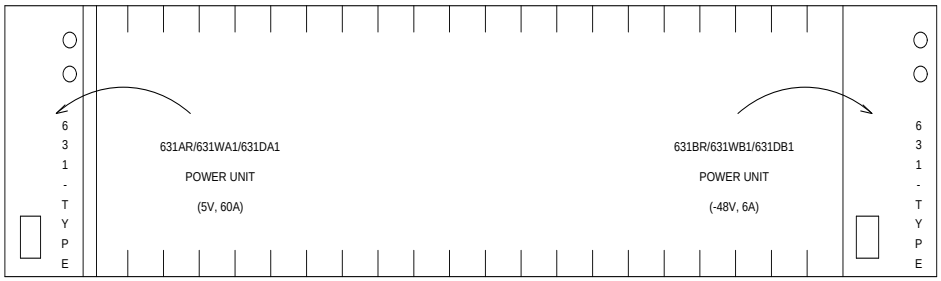

Figure 6-46. Locations of Power Units

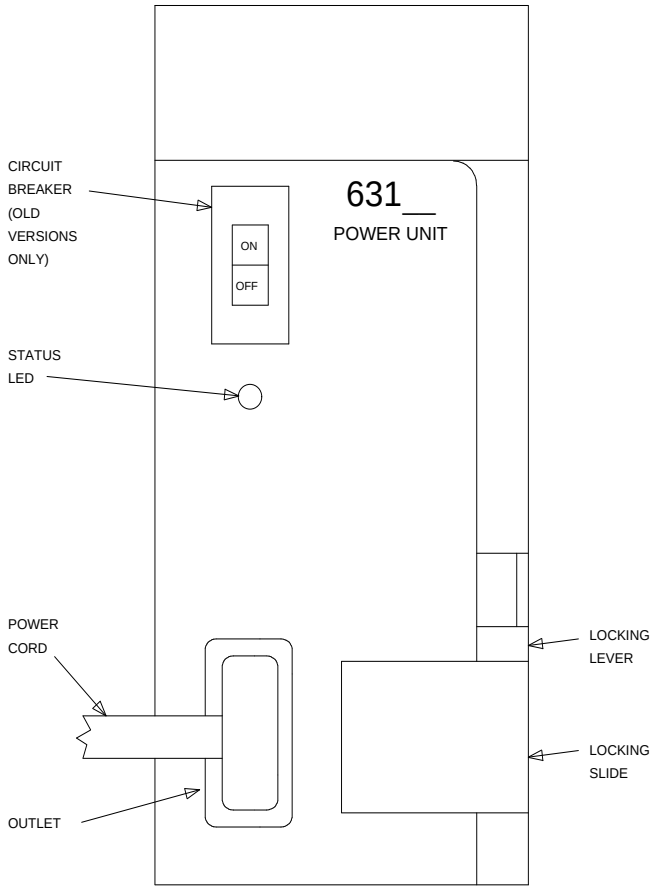

Figure 6-47. 631-Type Power Unit

Test the CURL

1. Plug the cabinet power cord into the appropriate receptacle.
2. At the power-distribution unit, set the main circuit breaker to ON.
3. Unplug the power cord from the power unit ‘‘B’’ (right-hand side) in the ‘‘A’’ carrier.
4. Verify the fans continue running. If they are not running, check the installation of the CURL.
5. Reconnect the power cord to the power unit in the ‘‘A’’ carrier, then unplug the power cord from power unit ‘‘B’’ (right-hand side) in the ‘‘B’’ carrier.
6. Verify the fans continue running. If they are not running, check the installation of the CURL.
7. Reconnect the power cord to the power unit in the ‘‘B’’ carrier.
8. At the power-distribution unit, set the main circuit breaker to OFF.

Install Circuit Packs

1. See WARNING and NOTE. Install the new G3r V4 control circuit packs into carriers ‘‘A’’ and ‘‘B.’’ Use the following figure, the new decal, and the annotated ‘‘list configuration all’’ (provided with the G3r V4 tape) as a guide.

   WARNING:
   Before inserting or removing a circuit pack from a cabinet, put on a wrist strap and attach its plug or clip to the cabinet’s frame.

   NOTE:
   Currently, both TN768 Tone Clock circuit packs reside in port slots of the universal module being upgraded. As part of this step, relocate these circuit packs to the ‘‘TONE CLOCK’’ slot of carrier ‘‘A’’ and port slot ‘‘1’’ of carrier ‘‘B.’’ AT&T recommends that you upgrade to the TN2182 Tone-Clock.

2. For a directly connected critical-reliability G3r V4 system with two port networks, ensure that the PPN and this EPN are both equipped with two TN570 expansion interface circuit packs.

   For a directly connected system with three port networks, ensure that the PPN and each EPN have four TN570s.

   For a CSS-connected system, ensure that each port network has two TN570s and that both switch node carriers have one TN573 for each port network.

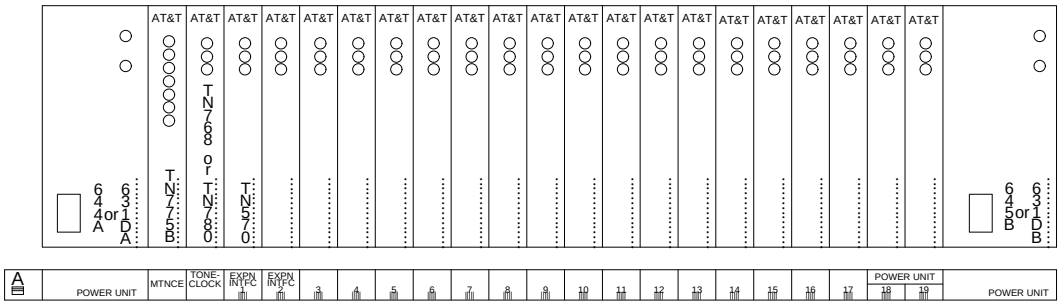

Figure 6-48. Circuit-Pack Locations in G3r V4 Expansion Control Carrier

Interconnect Port Networks — Critical-Reliability System

See NOTES. Fiber-optic cabling terminated to 9823A lightwave transceivers can interconnect port networks (PNs) located up to 4,900 feet (about 9/10 mile) apart. Whereas, fiber-optic cabling terminated to 9823B lightwave transceivers can interconnect port networks located up to 25,000 feet (about 4.7 miles) apart. When available and whenever the desired distance between the port networks is less than 25,000 feet, fiber is the preferred medium for interconnecting port networks, providing significantly higher-bandwidth connectivity than DS1C remoting.

NOTE:
As always, these distance limitations are approximate measurements of the *actual* fiber right-of-way (not of the shortest linear distance) between the two endpoints.

NOTE:
It is important to label every cable that you install. For details, refer to the section, *Labels for Fiber-Optic Cables*, in Appendix E of the installation manual.

NOTE:
Throughout these procedures, remember to keep track of which fiber is attached to which connector on each lightwave transceiver. This section provides figures offering the suggested way of making these connections.

The connectors on the lightwave transceivers are labeled either “TX” (transmit) or “RX” (receive), while the fibers attached to each connector are numbered either ‘‘1’’ or ‘‘2.’’ A viable fiber connection is only made when both fibers in each cable (that is, ‘‘1’’ and ‘‘2’’) route from the “TX” connector of a port network to the “RX” connector of its adjacent port network. For an example, refer to Figure 6-50.)

NOTE:
For implementation details, refer to the ‘‘Fiber Link Administration’’ sections of *DEFINITY Communications System Generic 3 V4 Implementation*, 555-230-653.

Collocated Port Networks

For a critical-reliability system with one collocated expansion port network, two fiber-optic cables (FL2P-P-XX) and four lightwave transceivers (9823-type) are required to directly connect the networks.

For a critical-reliability system with two collocated expansion port networks, six fiber-optic cables (FL2P-P-XX) and twelve lightwave transceivers (9823-type) are required to directly connect the networks.

NOTE:
For the FL2P-P-XX fiber-optic cable, the -XX suffix represents the length of the cable in feet. Based on floor-plan considerations, the length of these cables may vary. However, 20-foot cables are normally adequate for a G3r V4 with two port networks.

See NOTE. For collocated cabinets, the fiber-optic cables should be routed directly from the PPN to the EPN cabinet. If, for this upgrade, a ''DEFINITY style'' PPN cabinet is collocated with another ''DEFINITY style'' EPN cabinet, the preferred routing is to run the cables *up* the cable tray and out the top of the PPN cabinet. The cables are then run to the other cabinet, through the top of the cabinet, and down the cable tray to the desired carrier level.

NOTE:
Refer to Appendix E of *DEFINITY Communications System Generic 1 and Generic 3 Installation and Test*, 555-230-104, Issue 5, for additional guidelines about fiber routing.

If, for this upgrade, a ''DEFINITY style'' PPN cabinet is collocated with either a small cabinet, medium cabinet, or single-carrier cabinet stack, the preferred routing is to run the cables *down* the cable tray and out the bottom of the PPN cabinet. The cables are then run to the EPN cabinet and up the outside of the rear panels to the desired carrier level.

Fiber-Remoted Port Networks

For a critical-reliability system with one fiber-remoted expansion port network, four fiber-optic cables (FL2P-P-XX), four lightwave transceivers (9823-type), and four lightwave-interface units (provided by the PSC) are required.

For a critical-reliability system with two fiber-remoted expansion port networks, twelve fiber-optic cables (FL2P-P-XX), twelve lightwave transceivers (9823-type), and twelve lightwave-interface units (provided by the PSC) are required.

For fiber-remoted cabinets, the cables should be routed down the cable tray and out the bottom of the cabinet to the cross-connect field where the lightwave-interface units are located.

DS1C-Remoted Port Networks

For a critical-reliability system with one DS1C-remoted expansion port network, this arrangement requires:

- Four DS1C circuit packs (TN574)
- Four DS1C-to-EI cables (846448637 and/or 846448645)
- Four H-600-348 cables
- Two, four, six, or eight pairs of channel service units (CSUs)
- Two, four, six, or eight pairs of wall-field cables (provided with the CSUs)

For a critical-reliability system with two DS1C-remoted expansion port networks, this arrangement requires:

- 12 DS1C circuit packs (TN574)
- 12 DS1C-to-EI cables (846448637 and/or 846448645)
- 12 H-600-348 cables
- 6, 12, 18, or 24 pairs of channel service units (CSUs)
- 6, 12, 18, or 24 pairs of wall-field cables (provided with the CSUs)

In any case, use cable ties to secure the cable against the walls of the cable tray at the cable-tie positions built into the trays.

For One or Two Collocated Expansion Port Networks

1. Behind port carrier C of PPN cabinet 1 (see Figure 6-49, Figure 6-50, Figure 6-51, and Figure 6-52):
    - Install a 9823-type lightwave transceiver on cable connector at slot 1C02.
    - Connect one end of the fiber-optic cable to the lightwave transceiver, just installed, at slot 1C02.
    - Delicately attach the fiber-optic cable (with cable ties) to the wall of the cable tray at the built-in cable-tie positions.
    - At the top of the cabinet, coil up the surplus length of fiber-optic cable. Delicately attach the coil to the cable-tray wall with cable ties.

2. Behind port carrier B of EPN cabinet 2:
   - Install the same kind (either 9823-A or 9823-B) of lightwave transceiver on cable connector at slot 2B02.
   - Connect the other end of the fiber-optic cable to the lightwave transceiver, just installed, at slot 2B02.
   - Delicately attach the fiber-optic cable (with cable ties) to the wall of the cable tray at the built-in cable-tie positions.
   - At the top of the cabinet, coil up the surplus length of fiber-optic cable. Delicately attach the coil to the cable-tray wall with cable ties.
3. Behind port carrier D of PPN cabinet 1:
   - Install a 9823-type lightwave transceiver on cable connector at slot 1D02.
   - Connect one end of the fiber-optic cable to the lightwave transceiver, just installed, at slot 1D02.
   - Delicately attach the fiber-optic cable (with cable ties) to the wall of the cable tray at the built-in cable-tie positions.
   - At the top of the cabinet, coil up the surplus length of fiber-optic cable. Delicately attach the coil to the cable-tray wall with cable ties.
4. Behind control carrier A of EPN cabinet 2:
   - Install the same kind (either 9823-A or 9823-B) of lightwave transceiver on cable connector at slot 2A01.
   - Connect the other end of the fiber-optic cable to the lightwave transceiver, just installed, at slot 2A01.
   - Delicately attach the fiber-optic cable (with cable ties) to the wall of the cable tray at the built-in cable-tie positions.
   - At the top of the cabinet, coil up the surplus length of fiber-optic cable. Delicately attach the coil to the cable-tray wall with cable ties.

For Two Collocated Expansion Port Networks

1. Behind port carrier C of PPN cabinet 1:
   - Install a 9823-type lightwave transceiver on cable connector at slot 1C03.
   - Connect one end of the fiber-optic cable to the lightwave transceiver, just installed, at slot 1C03.
   - Delicately attach the fiber-optic cable (with cable ties) to the wall of the cable tray at the built-in cable-tie positions.
   - At the top of the cabinet, coil up the surplus length of fiber-optic cable. Delicately attach the coil to the cable-tray wall with cable ties.
2. Behind port carrier B of EPN cabinet 3:
   - Install the same kind (either 9823-A or 9823-B) of lightwave transceiver on cable connector at slot 3B02.
   - Connect the other end of the fiber-optic cable to the lightwave transceiver, just installed, at slot 3B02.
   - Delicately attach the fiber-optic cable (with cable ties) to the wall of the cable tray at the built-in cable-tie positions.
   - At the top of the cabinet, coil up the surplus length of fiber-optic cable. Delicately attach the coil to the cable-tray wall with cable ties.
3. Behind port carrier D of PPN cabinet 1:
   - Install a 9823-type lightwave transceiver on cable connector at slot 1D03.
   - Connect one end of the fiber-optic cable to the lightwave transceiver, just installed, at slot 1D03.
   - Delicately attach the fiber-optic cable (with cable ties) to the wall of the cable tray at the built-in cable-tie positions.
   - At the top of the cabinet, coil up the surplus length of fiber-optic cable. Delicately attach the coil to the cable-tray wall with cable ties.

4. Behind control carrier A of EPN cabinet 3:
   - Install the same kind (either 9823-A or 9823-B) of lightwave transceiver on cable connector at slot 3A01.
   - Connect the other end of the fiber-optic cable to the lightwave transceiver, just installed, at slot 3A01.
   - Delicately attach the fiber-optic cable (with cable ties) to the wall of the cable tray at the built-in cable-tie positions.
   - At the top of the cabinet, coil up the surplus length of fiber-optic cable. Delicately attach the coil to the cable-tray wall with cable ties.
5. Behind control carrier A of EPN cabinet 2:
   - Install a 9823-type lightwave transceiver on cable connector at slot 2A02.
   - Connect one end of the fiber-optic cable to the lightwave transceiver, just installed, at slot 2A02.
   - Delicately attach the fiber-optic cable (with cable ties) to the wall of the cable tray at the built-in cable-tie positions.
   - At the top of the cabinet, coil up the surplus length of fiber-optic cable. Delicately attach the coil to the cable-tray wall with cable ties.
6. Behind control carrier A of EPN cabinet 3:
   - Install the same kind (either 9823-A or 9823-B) of lightwave transceiver on cable connector at slot 3A02.
   - Connect the other end of the fiber-optic cable to the lightwave transceiver, just installed, at slot 3A02.
   - Delicately attach the fiber-optic cable (with cable ties) to the wall of the cable tray at the built-in cable-tie positions.
   - At the top of the cabinet, coil up the surplus length of fiber-optic cable. Delicately attach the coil to the cable-tray wall with cable ties.
7. Behind port carrier B of EPN cabinet 2:
   - Install a 9823-type lightwave transceiver on cable connector at slot 2B03.
   - Connect one end of the fiber-optic cable to the lightwave transceiver, just installed, at slot 2B03.
   - Delicately attach the fiber-optic cable (with cable ties) to the wall of the cable tray at the built-in cable-tie positions.
   - At the top of the cabinet, coil up the surplus length of fiber-optic cable. Delicately attach the coil to the cable-tray wall with cable ties.

8. Behind port carrier B of EPN cabinet 3:
   - Install the same kind (either 9823-A or 9823-B) of lightwave transceiver on cable connector at slot 3B03.
   - Connect the other end of the fiber-optic cable to the lightwave transceiver, just installed, at slot 3B03.
   - Delicately attach the fiber-optic cable (with cable ties) to the wall of the cable tray at the built-in cable-tie positions.
   - At the top of the cabinet, coil up the surplus length of fiber-optic cable. Delicately attach the coil to the cable-tray wall with cable ties.

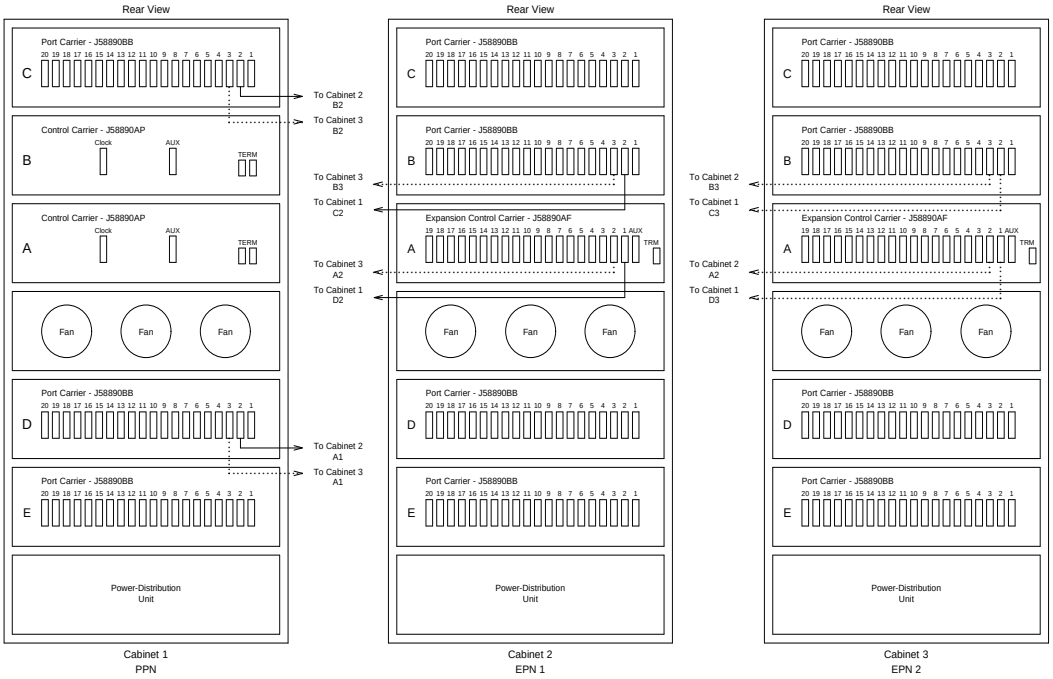

Figure 6-49. Critical-Reliability G3r V4 with Two or Three Port Networks

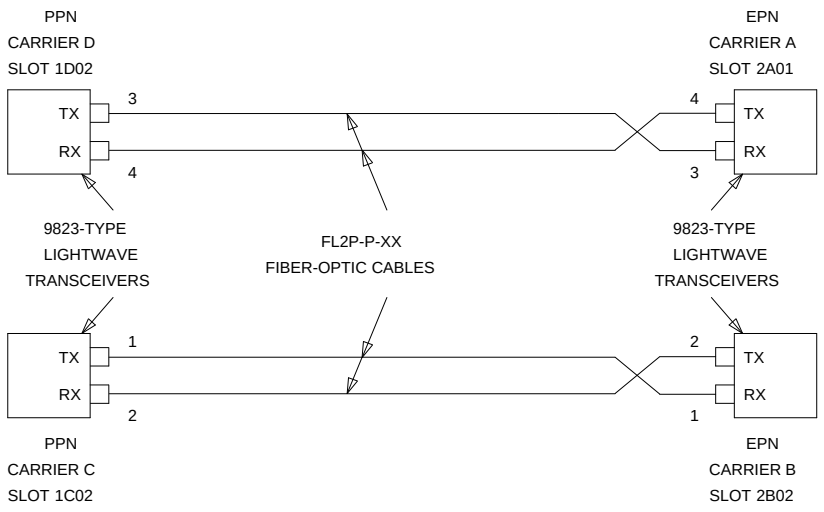

Figure 6-50. Fiber-Optic Connections PPN to EPN1

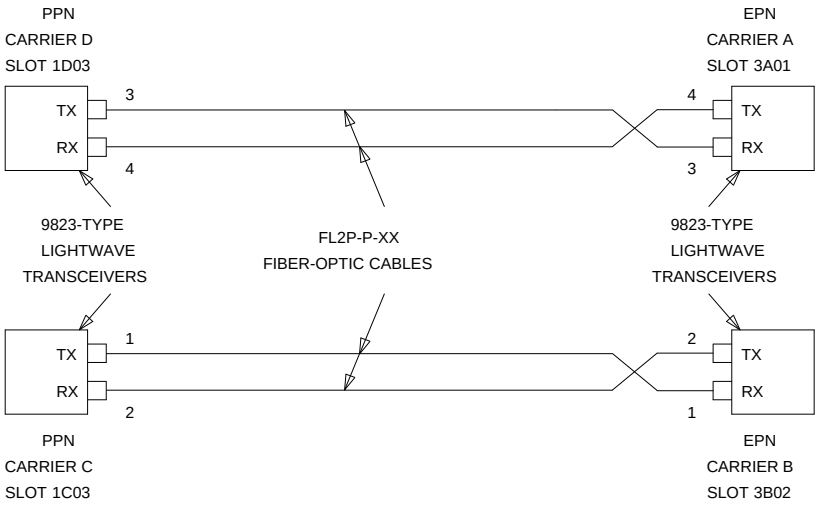

Figure 6-51. Fiber-Optic Connections PPN to EPN2

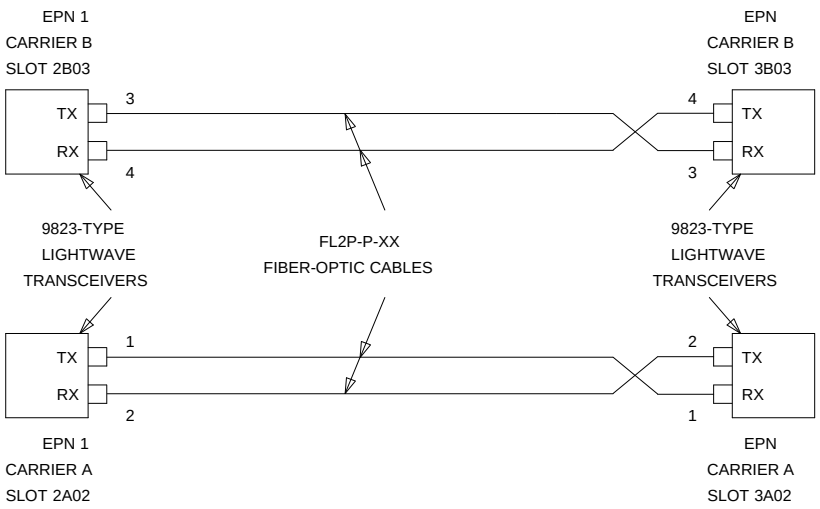

Figure 6-52. Fiber-Optic Connections EPN1 to EPN2

For One or Two Fiber-Remoted Expansion Port Networks

1. Behind port carrier C of PPN cabinet 1 (see Figure 6-53, Figure 6-54, Figure 6-55, and Figure 6-56):
   - Install a 9823-type lightwave transceiver on cable connector at slot 1C02.
   - Connect one end of the fiber-optic cable to the lightwave transceiver at slot 1C02.
   - Route the fiber-optic cable from the lightwave transceiver to the cabinet's cable tray and downward out of the cabinet through the cable manager to the PDS cross-connect facility.
   - At the PDS cross-connect facility, connect the fiber-optic cable to the lightwave-interface unit provided.
   - Delicately attach the fiber-optic cable (with cable ties) to the wall of the cable tray at the built-in cable-tie positions.

2. Behind port carrier B of EPN cabinet 2:
   - Install the same kind (either 9823-A or 9823-B) of lightwave transceiver on cable connector at slot 2B02.
   - Connect the fiber-optic cable to the lightwave transceiver slot 2B02.
   - Route the fiber-optic cable from the lightwave transceiver to the cabinet's cable tray and downward out of the cabinet through the cable manager to the PDS cross-connect facility.
   - At the PDS cross-connect facility, connect the fiber-optic cable to the lightwave-interface unit provided.
   - Delicately attach the fiber-optic cable (with cable ties) to the wall of the cable tray at the built-in cable-tie positions.
   - At the top of the cabinet, coil up the surplus length of fiber-optic cable. Delicately attach the coil to the cable-tray wall with cable ties.
3. Behind port carrier D of PPN cabinet 1:
   - Install a 9823-type lightwave transceiver on cable connector at slot 1D02.
   - Connect one end of the fiber-optic cable to the lightwave transceiver at slot 1D02.
   - Route the fiber-optic cable from the lightwave transceiver to the cabinet's cable tray and downward out of the cabinet through the cable manager to the PDS cross-connect facility.
   - At the PDS cross-connect facility, connect the fiber-optic cable to the lightwave-interface unit provided.
   - Delicately attach the fiber-optic cable (with cable ties) to the wall of the cable tray at the built-in cable-tie positions.
4. Behind control carrier A of EPN cabinet 2:
   - Install the same kind (either 9823-A or 9823-B) of lightwave transceiver on cable connector at slot 2A01.
   - Connect the fiber-optic cable to the lightwave transceiver slot 2A01.
   - Route the fiber-optic cable from the lightwave transceiver to the cabinet's cable tray and downward out of the cabinet through the cable manager to the PDS cross-connect facility.
   - At the PDS cross-connect facility, connect the fiber-optic cable to the lightwave-interface unit provided.
   - Delicately attach the fiber-optic cable (with cable ties) to the wall of the cable tray at the built-in cable-tie positions.

- At the top of the cabinet, coil up the surplus length of fiber-optic cable. Delicately attach the coil to the cable-tray wall with cable ties.

For Two Fiber-Remoted Expansion Port Networks

1. Behind port carrier C of PPN cabinet 1:
   - Install a 9823-type lightwave transceiver on cable connector at slot 1C03.
   - Connect one end of the fiber-optic cable to the lightwave transceiver at slot 1C03.
   - Route the fiber-optic cable from the lightwave transceiver to the cabinet's cable tray and downward out of the cabinet through the cable manager to the PDS cross-connect facility.
   - At the PDS cross-connect facility, connect the fiber-optic cable to the lightwave-interface unit provided.
   - Delicately attach the fiber-optic cable (with cable ties) to the wall of the cable tray at the built-in cable-tie positions.
2. Behind port carrier B of EPN cabinet 3:
   - Install the same kind (either 9823-A or 9823-B) of lightwave transceiver on cable connector at slot 3B02.
   - Connect the fiber-optic cable to the lightwave transceiver slot 3B02.
   - Route the fiber-optic cable from the lightwave transceiver to the cabinet's cable tray and downward out of the cabinet through the cable manager to the PDS cross-connect facility.
   - At the PDS cross-connect facility, connect the fiber-optic cable to the lightwave-interface unit provided.
   - Delicately attach the fiber-optic cable (with cable ties) to the wall of the cable tray at the built-in cable-tie positions.
   - At the top of the cabinet, coil up the surplus length of fiber-optic cable. Delicately attach the coil to the cable-tray wall with cable ties.
3. Behind port carrier D of PPN cabinet 1:
   - Install a 9823-type lightwave transceiver on cable connector at slot 1D03.
   - Connect one end of the fiber-optic cable to the lightwave transceiver at slot 1D03.
   - Route the fiber-optic cable from the lightwave transceiver to the cabinet's cable tray and downward out of the cabinet through the cable manager to the PDS cross-connect facility.

- At the PDS cross-connect facility, connect the fiber-optic cable to the lightwave-interface unit provided.
- Delicately attach the fiber-optic cable (with cable ties) to the wall of the cable tray at the built-in cable-tie positions.

4. Behind control carrier A of EPN cabinet 3:
   - Install the same kind (either 9823-A or 9823-B) of lightwave transceiver on cable connector at slot 3A01.
   - Connect the fiber-optic cable to the lightwave transceiver slot 3A01.
   - Route the fiber-optic cable from the lightwave transceiver to the cabinet's cable tray and downward out of the cabinet through the cable manager to the PDS cross-connect facility.
   - At the PDS cross-connect facility, connect the fiber-optic cable to the lightwave-interface unit provided.
   - Delicately attach the fiber-optic cable (with cable ties) to the wall of the cable tray at the built-in cable-tie positions.
   - At the top of the cabinet, coil up the surplus length of fiber-optic cable. Delicately attach the coil to the cable-tray wall with cable ties.
5. Behind control carrier A of EPN cabinet 2:
   - Install a 9823-type lightwave transceiver on cable connector at slot 2A02.
   - Connect one end of the fiber-optic cable to the lightwave transceiver at slot 2A02.
   - Route the fiber-optic cable from the lightwave transceiver to the cabinet's cable tray and downward out of the cabinet through the cable manager to the PDS cross-connect facility.
   - At the PDS cross-connect facility, connect the fiber-optic cable to the lightwave-interface unit provided.
   - Delicately attach the fiber-optic cable (with cable ties) to the wall of the cable tray at the built-in cable-tie positions.
6. Behind control carrier A of EPN cabinet 3:
   - Install the same kind (either 9823-A or 9823-B) of lightwave transceiver on cable connector at slot 3A02.
   - Connect the fiber-optic cable to the lightwave transceiver at slot 3A02.
   - Route the fiber-optic cable from the lightwave transceiver to the cabinet's cable tray and downward out of the cabinet through the cable manager to the PDS cross-connect facility.
   - At the PDS cross-connect facility, connect the fiber-optic cable to the lightwave-interface unit provided.

- Delicately attach the fiber-optic cable (with cable ties) to the wall of the cable tray at the built-in cable-tie positions.
- At the top of the cabinet, coil up the surplus length of fiber-optic cable. Delicately attach the coil to the cable-tray wall with cable ties.

7. Behind port carrier B of EPN cabinet 2:
   - Install a 9823-type lightwave transceiver on cable connector at slot 2B03.
   - Connect one end of the fiber-optic cable to the lightwave transceiver at slot 2B03.
   - Route the fiber-optic cable from the lightwave transceiver to the cabinet's cable tray and downward out of the cabinet through the cable manager to the PDS cross-connect facility.
   - At the PDS cross-connect facility, connect the fiber-optic cable to the lightwave-interface unit provided.
   - Delicately attach the fiber-optic cable (with cable ties) to the wall of the cable tray at the built-in cable-tie positions.
8. Behind port carrier B of EPN cabinet 3:
   - Install the same kind (either 9823-A or 9823-B) of lightwave transceiver on cable connector at slot 3B03.
   - Connect the fiber-optic cable to the lightwave transceiver at slot 3B03.
   - Route the fiber-optic cable from the lightwave transceiver to the cabinet's cable tray and downward out of the cabinet through the cable manager to the PDS cross-connect facility.
   - At the PDS cross-connect facility, connect the fiber-optic cable to the lightwave-interface unit provided.
   - Delicately attach the fiber-optic cable (with cable ties) to the wall of the cable tray at the built-in cable-tie positions.
   - At the top of the cabinet, coil up the surplus length of fiber-optic cable. Delicately attach the coil to the cable-tray wall with cable ties.

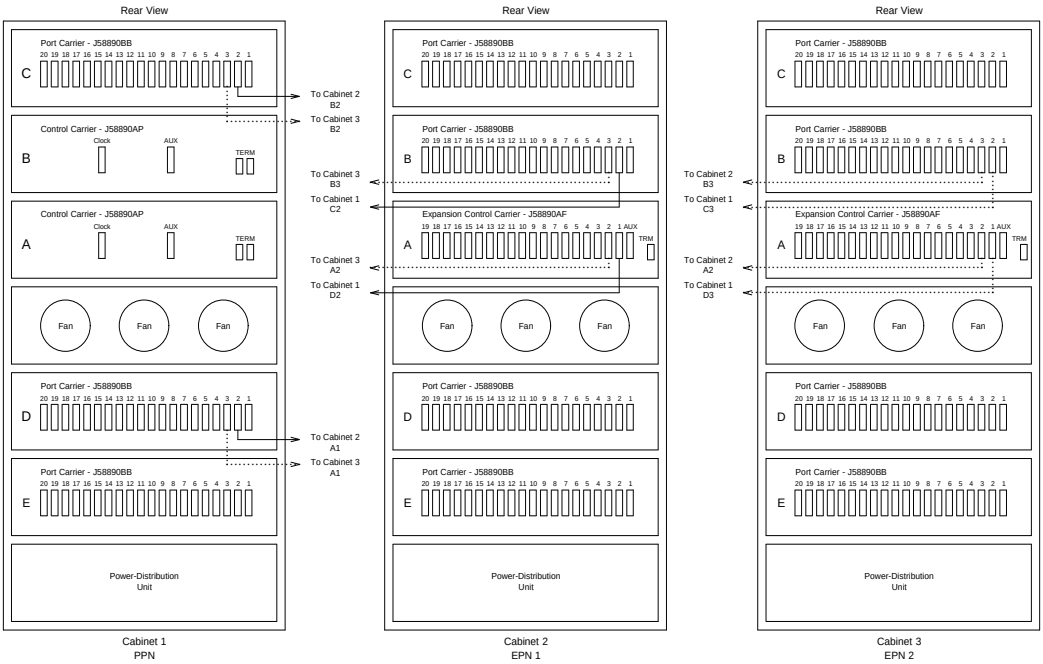

Figure 6-53. Critical-Reliability G3r V4 with Two or Three Port Networks

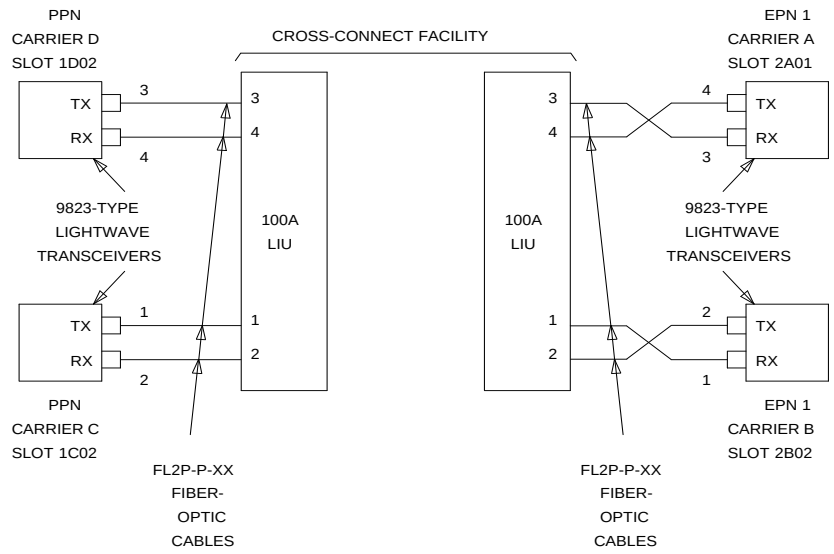

Figure 6-54. Fiber-Optic Connections PPN to EPN1

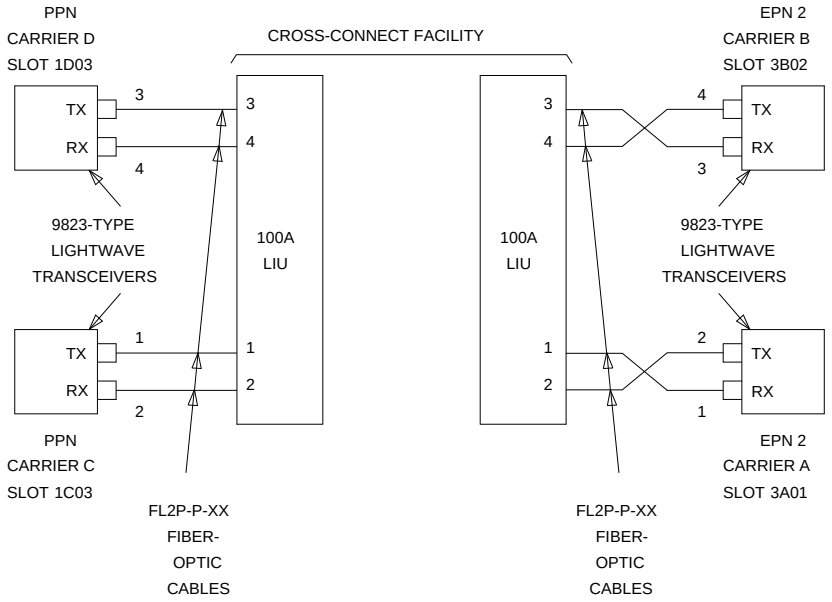

Figure 6-55. Fiber-Optic Connections PPN to EPN2

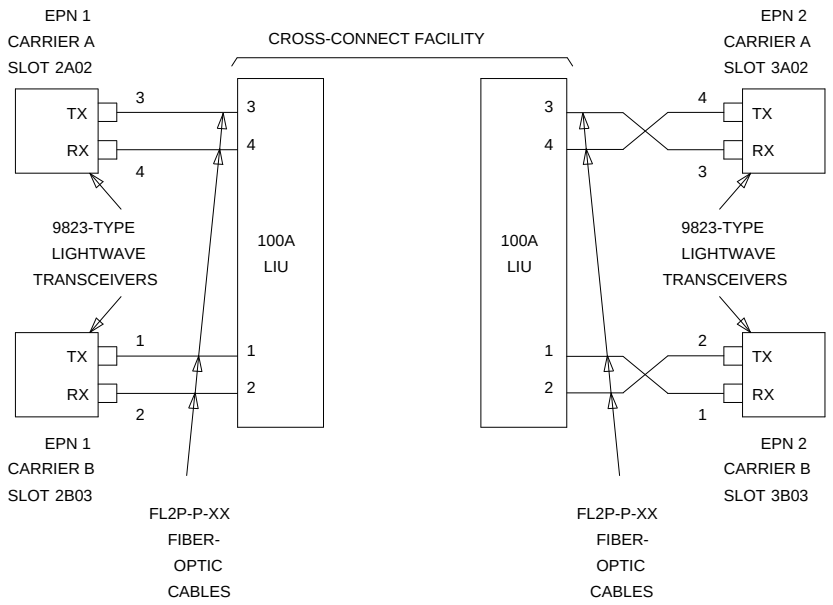

Figure 6-56. Fiber-Optic Connections EPN1 to EPN2

For One to Fifteen Switch-Connected Expansion Port Networks

1. Behind the PPN cabinet (see Figure 6-57):
   - Install a 9823-type lightwave transceiver on cable connector at slot 1E01.
   - Install a 9823-type lightwave transceiver on cable connector at slot 1E02.
   - Connect the metallic intracarrier cable to the lightwave transceivers at slots 1E01 and 1E02.
   - Install a 9823-type lightwave transceiver on cable connector at slot 1D01.
   - Install a 9823-type lightwave transceiver on cable connector at slot 1D02.
   - Connect the metallic intracarrier cable to the lightwave transceivers at slots 1D01 and 1D02.
2. Behind switch node carrier E of PPN cabinet 1 (see Figure 6-57):
   - For each EPN, install one 9823-type lightwave transceiver on a cable connector with the following order of slots: 1E20, 1E03, 1E19, 1E04, 1E18, 1E05, etc.

- Connect one end of each fiber-optic cable to each lightwave transceiver, just installed.
- Delicately attach the fiber-optic cables (with cable ties) to the wall of the cable tray at the built-in cable-tie positions.

3. Behind control carrier A of each EPN cabinet:
   - Install the same kind (either 9823-A or 9823-B) of lightwave transceiver on cable connector at slot A01.
   - Connect the other end of the fiber-optic cable to the lightwave transceiver, just installed, at slot A01.
   - Delicately attach the fiber-optic cable (with cable ties) to the wall of the cable tray at the built-in cable-tie positions.
   - At the top of the cabinet, coil up the surplus length of fiber-optic cable, and delicately attach the coil to the wall of the cable tray.
4. Behind switch node carrier D of PPN cabinet 1 (see Figure 6-57):
   - For each EPN, install one 9823-type lightwave transceiver on a cable connector with the following order of slots: 1E20, 1E03, 1E19, 1E04, 1E18, 1E05, etc.
   - Connect one end of each fiber-optic cable to each lightwave transceiver, just installed.
   - Delicately attach the fiber-optic cables (with cable ties) to the wall of the cable tray at the built-in cable-tie positions.
5. Behind port carrier B of each EPN cabinet:
   - Install the same kind (either 9823-A or 9823-B) of lightwave transceiver on cable connector at slot B02.
   - Connect the other end of the fiber-optic cable to the lightwave transceiver, just installed, at slot B02.
   - Delicately attach the fiber-optic cable (with cable ties) to the wall of the cable tray at the built-in cable-tie positions.
   - At the top of the cabinet, coil up the surplus length of fiber-optic cable, and delicately attach the coil to the wall of the cable tray.

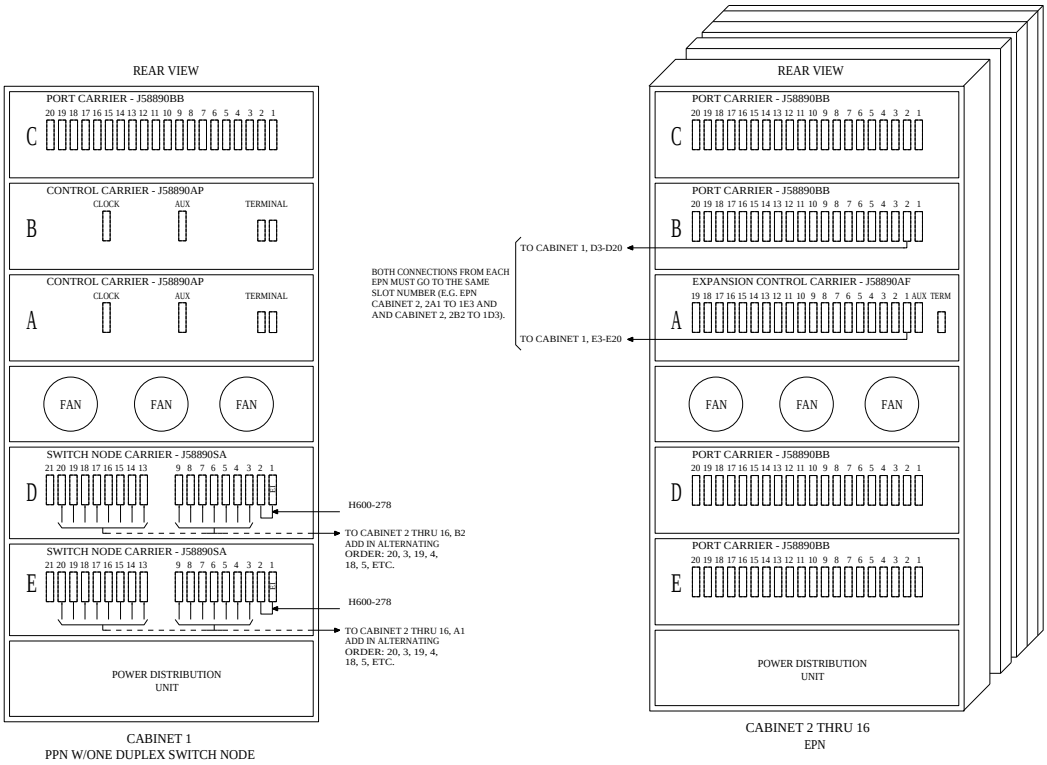

Figure 6-57. Fiber-Optic Connections through Center Stage Switch

DS1C-Remoted Cabinets

See NOTES. Digital Services 1 (DS1) facilities and associated equipment-room hardware and cabling can interconnect two port networks (PNs) located up to 100 miles apart. Although DS1 remoting always serves as a lower-bandwidth alternative to fiber remoting, DS1 remoting is especially attractive when:

- Fiber-optic cabling is unavailable to the remote site
- When the desired distance between the port networks exceeds the practical fiber limit of 25,000 feet (about 4.7 miles)
- Digital Services facilities, with enough bandwidth for interconnection, already exist between the two port networks

NOTE:
As always, these distance limitations are approximate measurements of the *actual* fiber or copper right-of-way (not of the shortest linear distance) between the two endpoints.

NOTE:
The 100-mile limit for DS1 remoting is the maximum distance between *any* two port networks in a G3r V4 system with either direct or switched port-network connections.

For example, in a *directly connected* system, a single EPN can be remoted up to 100 miles. This is because the length of the *direct* fiber connection from any port network in the local equipment room to the remote EPN is 100 miles.

However, if more than one EPN is remoted in a directly connected system, the 100-mile limit applies to any two port networks. Assuming straight cable runs, suppose that a customer wants to remote one EPN 80 miles due east and another EPN due north of the local PPN. This arrangement can only be accommodated if the second EPN resides no more than 60 miles north of the PPN. This is because the direct fiber distance between the two EPNs is also limited to 100 miles.

As another example, in *switch-connected* system with numerous port networks, one EPN might be remoted 75 miles from the switch node. If this were the case, then the maximum distance that any other EPN could be remoted would be 25 miles.

Digital public-network tie-trunk facilities provide the end-to end connectivity between the port networks. For either type of port network (PPN or EPN), a TN574 DS1 Converter (DS1C) circuit pack serves as the port-network interface to the DS1 facilities. As a PPN interface, a TN574 DS1C can reside in either:

- A port carrier (in any port slot)
- A switched node carrier (in port slot ‘‘1’’ or ‘‘21’’)

As an EPN interface, a TN574 DS1C can reside in an expansion control carrier (in any port slot).

DS1 Cabling within the Local Port Networks. See NOTE. Use the running list that accompanies the upgrade equipment to determine which cable should be connected where. The following paragraphs only provide conceptual information about wiring a DS1C interface either to an expansion interface or to a switched node interface, not step-by-step procedures for wiring a specific G3r V4 system.

NOTE:
It is important to label every cable that you install. For details, refer to the section, *Labels for Fiber-Optic Cables*, in Appendix E of the installation manual.

As shown in Figure 6-58, a cable connects each DS1C either to the appropriate TN570 expansion interface (for a direct connection to another port network) or to the appropriate TN573 SN Interface (for a switched connection to another port network). On the DS1C side, a 4C retainer binds this shielded cable to the DS1C port connector. On the EI/SNI side, a 4B retainer binds the cable to the EI/SNI port connector. The DS1C-to-EI/SNI cable also provides a piggy-back connector enabling subsequent access to the public network. Table 6-12 lists the cable numbers and lengths for the possible connections.

Table 6-12. Numbers and Lengths of DS1C-to-EI/SNI Cables

Connection Type	Comcode Number	Length
Within same carrier	846448637	1 foot
Between two carriers in same port network	846448645	5.5 feet
Between two carriers in adjacent networks	846448652, and one 846885259 bracket	1 foot (used with two 9823As, & one 20-foot fiber-optic cable)

DS1 Cabling to the Public Network. See NOTE. Use the running list that accompanies the upgrade equipment to determine which cable should be connected where. The following paragraphs only provide conceptual information about wiring a DS1C interface to a wall-field block, not step-by-step procedures for wiring a specific G3r V4 system.

NOTE:
It is important to label every cable that you install. For details, refer to the section, *Labels for Fiber-Optic Cables*, in Appendix E of the installation manual.

Figure 6-58 also shows the cabling between various port networks and the cross-connect field where the public network is accessed. If already connected to either an expansion or switched node interface, a DS1C circuit pack already resides either in an EPN expansion control carrier or in a PPN port carrier or switched node carrier.

Depending on the traffic requirements between the two port networks, a 25-foot H600-348 cable extends from the piggy-back connector (on each DS1C-to-EI/SNI cable) to from one to four channel service units (CSUs). [This cable branches to four 15-pin subminiature D-type connectors (labeled ‘‘01’’ to ‘‘04’’) to make the CSU connections.] Then, in turn, the CSU(s) are connected to the wall-field block (corresponding to the equipment location of the DS1C) at port connections ‘‘8,’’ ‘‘7,’’ ‘‘6,’’ and ‘‘5’’ (in descending order).

Neglecting overhead, this wiring arrangement can provide PN-to-PN communication at the bandwidth of up to four DS1 spans (1.544 Mbps each). Between each port network’s wall field, the port networks communicate across leased lines in the public network.

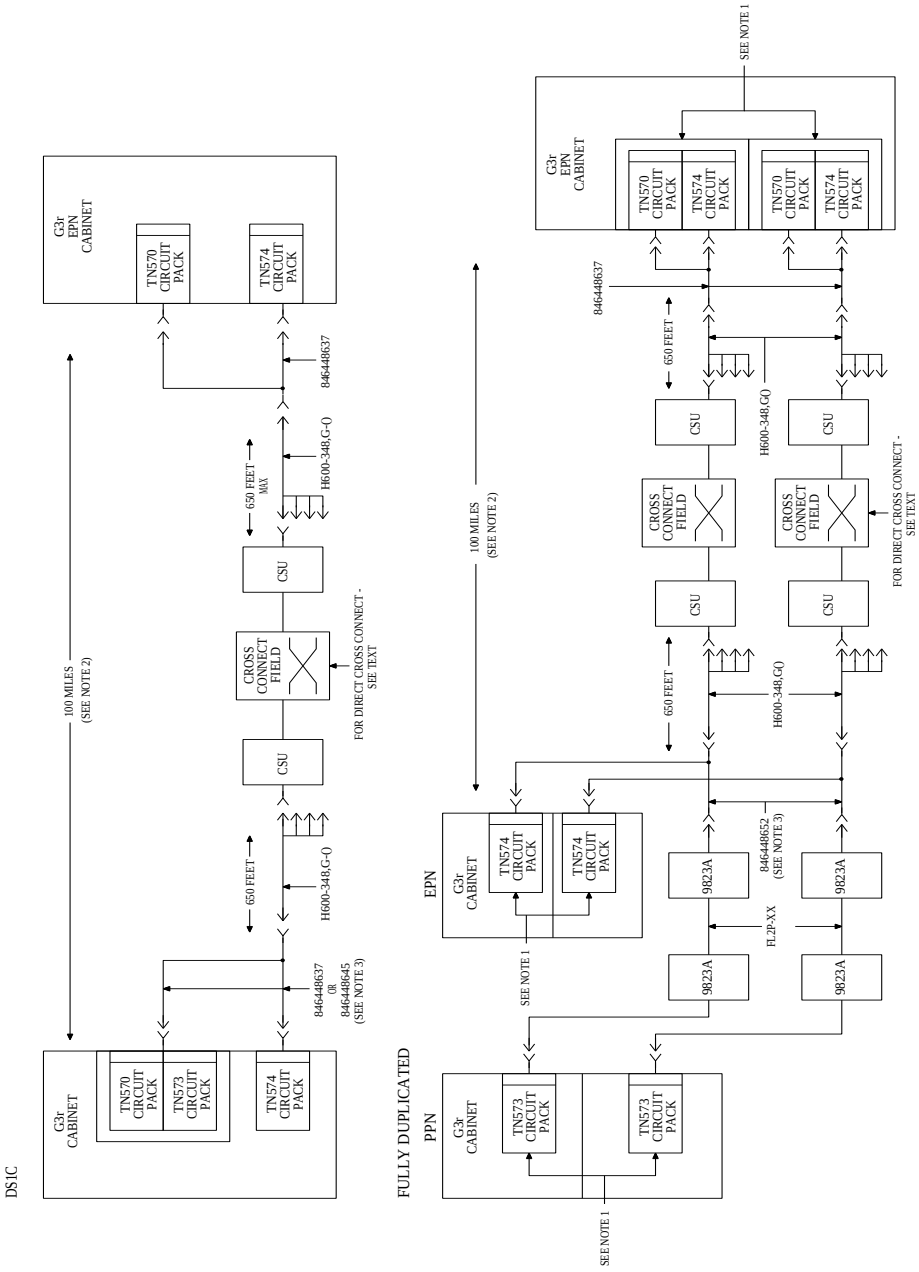

Figure 6-58. DS1 Connectivity between Remote PNs

Verify Usable Circuit-Pack Vintages

Verify that every G2 circuit pack reused in the upgrade conforms to the usable vintage requirements for a G3r V4 system (see Reference Guide for Circuit-Pack Vintages and Change Notices).

Install System Access Ports

As a prerequisite for connecting various endpoints that use EIA interfaces to the G3r V4 system, install the up to eight loop-around connections for Mode 2-to-Mode 3 (and vice versa) data conversion.

From the *outgoing* perspective of the system communicating with an EIA endpoint, these loop-around connections convert Mode 3 data (circuit-switched packet data, with undefined bit rates and packet specifications) to Mode 2 data (low-speed, usually asynchronous, data at rates of 300 to 19,200 bps) by:

- Accepting Mode 3 data off the LAN bus (from the SPE) at a TN553 Packet Data Line circuit pack, where Mode 3-to-Mode 2 conversion is done
- Routing the converted data through the cross-connect field and back to a TN726B Data Line where the equivalent Mode 2 data can access the TDM bus, for subsequent routing to an EIA endpoint

The endpoints that use these EIA interfaces and, therefore, require the Mode 2-to-Mode 3 conversion include:

- DEFINITY Communications System Generic 3 Management Applications (G3-MA)
- Remote DEFINITY Communications System Generic 3 Management Terminal (G3-MT)
- Basic Call Management System (BCMS) terminal
- Call Detail Recording Unit (CDRU)/Centralized Attendant Service Plus (CAS+)
- Property Management System (PMS)
- Printers

The following figures show this loop-around configuration and how the B25A cables are cross-connected.

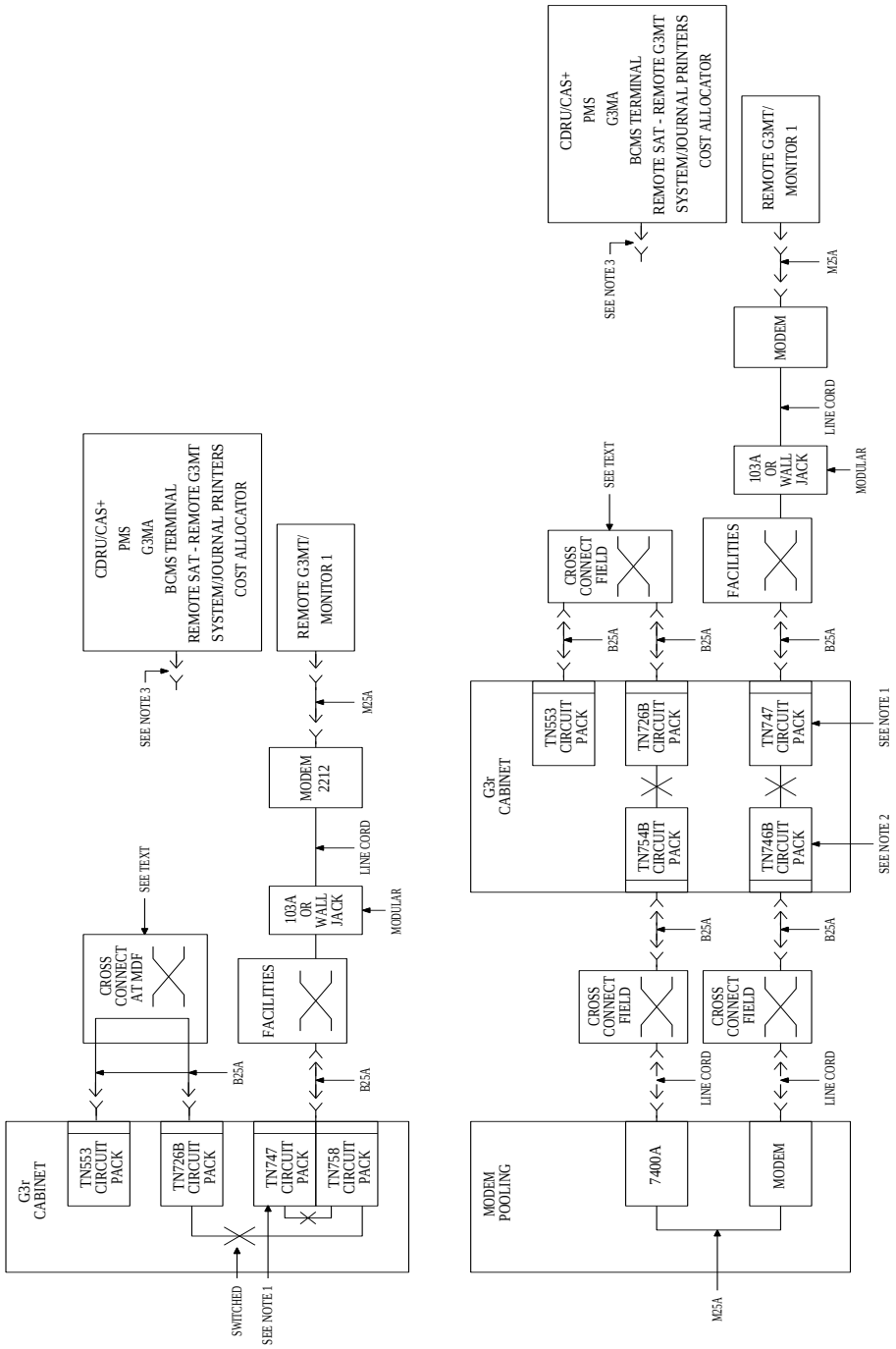

Figure 6-59. Connections: CDRU/CAS+, PMS, BCMS, Printers, G3-MA/MT

Pinouts for the TN553 and TN726B circuit packs shown cross-connected in the preceding figure are given in the table below.

Pinouts

TN553 (12 Ports)

1	26	
2	27	1
3	28	
4	29	2
5	30	
6	31	3
7	32	
8	33	4
9	34	
10	35	5
11	36	
12	37	6
13	38	
14	39	7
15	40	
16	41	8
17	42	
18	43	9
19	44	
20	45	10
21	46	
22	47	11
23	48	
24	49	12
25	50	G

TN726B (8 Ports)

1	26	Blank
2	27	
3	28	1
4	29	Blank
5	30	
6	31	2
7	32	Blank
8	33	
9	34	3
10	35	Blank
11	36	
12	37	4
13	38	Blank
14	39	
15	40	5
16	41	Blank
17	42	
18	43	6
19	44	Blank
20	45	
21	46	7
22	47	Blank
23	48	
24	49	8
25	50	Blank

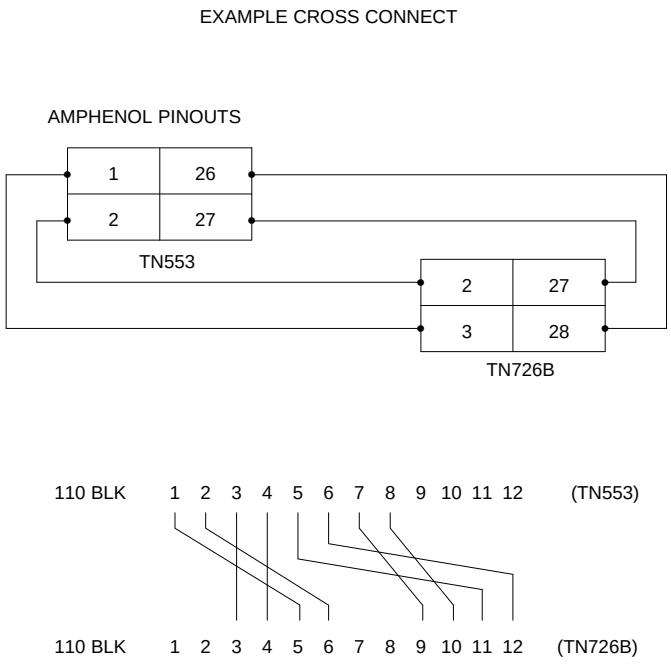

Figure 6-60. Example of Cross Connect between TN553 and TN726B

Remove Power-Failure Ground Strap

Remove the ground strap from the power-failure transfer unit.

Boot the G3r V4 System

1. Connect the G3-MT to the connector labeled ‘‘TERMINAL’’ behind PPN control carrier ‘‘A,’’ or install the G3-MA according to the ‘‘Set Up G3-MA’’ chapter of *DEFINITY Communications System Generic 3 Management Applications — Operations*, 585-229-202.
2. Verify that the new G3r V4 system tape is inserted in the PPN cabinet.
3. At each EPN power-distribution unit, set the main circuit breaker to ON.
4. At the PPN power-distribution unit, set the main circuit breaker to ON.
5. The system now goes through the reset level 4 rebooting process, loading the system translations from the preformatted disk. Rebooting requires 5 to 11 minutes.

Refer to ''Initialization and Recovery'' and ''LED Interpretation'' chapters in *DEFINITY Communications System Generic 3r V4 Maintenance*, 555-230-105, Issue 4, for circuit-pack LED indications and screen displays that occur during system reboot.

6. Get the order number of the upgrade, and call the regional CSA to request an ''init'' login so that right-to-use options can be enabled on the upgraded system.
7. Set the time to ensure that the system is booted properly.
8. Enter **`change sys cust`**. Press (RETURN). Use this form to assign the customer's right-to-use options on the G2-to-G3r V4 upgrade order.
9. Enter **`logoff`**. Press (RETURN). (After assigning the customer's right-to-use options, another log-in process is required.)
10. Log in as ''craft'' at the `login:` prompt on the G3-MT. (After assigning the customer's right-to-use options, the ''init'' log-in privileges are no longer necessary.)
11. Enter **`change site-data`**. Press (RETURN). Use this form to assign system-specific information (for example building, floor, stations, etc.)
12. Enter **`change cabinet 1`**. Press (RETURN). Use this form to assign the appropriate carrier types for port network 1.
13. Enter **`change sys dup`**. Press (RETURN). Use this form to enable high reliability (SPE duplication) or critical reliability (SPE and PNC duplication) for the system.
14. Enter **`save translation disk`**. Press (RETURN). This command instructs the system to write all translation information from memory to the disk.
15. Enter **`reset system 3`**. Press (RETURN). The system now goes through the reset level 3 rebooting process, reloading translations to activate the duplication option.
16. Log in as ''craft'' at the `login:` prompt on the G3-MT.
17. After about eight minutes, enter **`status spe`**. Press (RETURN). This command can provide state-of-health information for both system processors (SPEs). Verify that the standby SPE is refreshed and that the standby disk is in service.
18. Enter **`save translation disk`**. Press (RETURN). This command instructs the system to write all translation information from memory to both disks.

Close Upgraded EPN Cabinet and Reconnect Cables

1. At the power-distribution unit of the upgraded EPN, set the main circuit breaker to OFF.

   NOTE:
   Powering down an EPN without powering down the PPN will set off alarms. However, these alarms should clear after power is restored to each EPN.

2. Temporarily disconnect the lightwave transceivers and fiber-optic cables, already labeled, from the appropriate carriers.
3. Replace the back doors or back panels previously removed.
4. At the EPN cabinet, reconnect the lightwave transceivers, fiber-optic cables, and the connector cables associated with the carrier being replaced.
5. Install the front door on the EPN cabinet if previously removed.

Power Up the EPN Cabinets

1. At each EPN power-distribution unit, set the main circuit breaker to ON.

   After about 40 seconds, EPN power and PPN/EPN communications return.

2. After power returns to each EPN and all trouble is cleared, verify that the EMERGENCY TRANSFER CONTROL switch is set to AUTO. This restores the system to the normal mode.

Retranslate Port Circuits

If port circuit packs in the G2 module control carrier were relocated in order to put:

- A critical port circuit pack, requiring longer nominal battery holdover (e.g., a DS1 or an Announcement circuit pack), in a port slot
- A TN736, TN752, or TN755 power supply in port slots ‘‘18’’ and ‘‘19’’
- A TN570 Expansion Interface in port slot ‘‘1’’
- A TN570 in port slot ‘‘2’’ (for a second directly connected EPN)

of the new expansion control carrier, they must be retranslated now. Refer to *DEFINITY Communications System Generic 3 V4 Implementation*, 555-230-655, for instructions on performing the retranslations.

Run Acceptance Tests

Refer to Chapter 11 of *DEFINITY Communications System Generic 1 and Generic 3 Installation and Test*, 555-230-104, Issue 5, and perform the appropriate tests.

Register System as G3r V4

Get the serial number of the new G3r V4 PPN, and call the INADS Database Administrator at the Technical Service Center (1-800-248-1111) to register the upgraded system as a G3r V4.

Return Replaced G2 Equipment

The G2 equipment replaced, during the upgrade to G3r V4, should be returned to AT&T according to the requirements outlined in:

BCS/Material Logistics, MSL/Attended Stocking Locations

Methods and Procedures for Basic Material Returns

The replaced G2 equipment includes:

- G2 common control (CC) cabinet, carriers, and circuit packs and G2 time-multiplexed switch (TMS) cabinet, carriers, and circuit packs

  or

  G2 CC/TMS cabinet, carriers, and circuit packs
- G2 traditional module cabinets, carriers, and circuit packs
- G2 universal module control carriers (J58890AK) and control circuit packs
- G2 ICC cables (ED-1E434-11)
- G2 tape cartridges
- 4-series lightwave transceivers

Single-Carrier Cabinet G2 Universal Module to G3r V4 EPN

7

This chapter provides the information necessary to upgrade a DEFINITY® G2 universal module with single-carrier cabinets to a DEFINITY G3r V4 EPN. The hardware and software involved in the upgrades and the upgrade procedures are also provided.

CAUTION:
Be careful to find the right chapter for your upgrade. Using the software- and sometimes the hardware-upgrade PEC on the customer's order, refer to Table 1 in "About This Document" for the correct chapter.

The following processes are required for a G2 to G3r V4 upgrade:

- Upgrading the hardware

  This involves adding a new multicarrier PPN cabinet, replacing the first logical module control carrier (in each universal module) with an expansion control cabinet, replacing each second logical module control carrier with a port carrier, and replacing and adding circuit packs

- Replacing the software tape
- Upgrading the software

  This involves saving translations, acquiring a Translations Recovery, Additions, and Conversions System (TRACS) report, and extensively reentering system translations

- Testing the upgraded system to verify proper operation

G3r V4 features and functions are listed in the *DEFINITY Communications System Generic 3 Feature Description*, 555-230-204. *DEFINITY Communication System Generic 3 V4 Implementation*, 555-230-655, provides the commands, procedures, and forms required to initialize and administer the G3r V4.

Considerations

Service Interruption

The upgrade process requires a service interruption. This service interruption must be closely coordinated with the customer and the local account team.

Communication between Equipment Rooms

For an upgrade where some of the equipment resides at a remote location, the upgrade activity will be much easier if temporary communications are established between the equipment rooms.

Contact Network Technicians

The technician for each public and private network accessed by the system must be contacted before the upgrade begins. Otherwise, if these technicians are not aware of the service interruption caused by the upgrade, it is possible that network-access trunk facilities will be busied out at the far end.

Relocation of Port Circuit Packs

A G2 universal-module upgrade to G3r V4 *does not* cause port circuit packs, from the G2 universal module, to be moved and manually retranslated. This is because a G2 universal module is always upgraded to an EPN. So, during the universal-module upgrade to a G3r V4 EPN, a G3r V4 expansion control cabinet (with 14 to 16 available port slots) always replaces the G2 module-control cabinet (with no port slots), providing a net gain of from 14 to 16 port slots.

Usable Circuit-Pack Vintages

Every circuit pack used in the upgraded G3r V4 system must conform to the minimum usable vintage requirements for G3r V4. Those circuit packs shipped in the new G3r V4 PPN or shipped loose with the new EPN equipment should always meet the usable vintage specifications. In addition, at a presale site inspection, the Quality Protection Plan Change Notice (QPPCN) process must check the vintages of every G2 circuit pack that will be reused in the upgraded G3r V4 and, if necessary, replace those circuit packs that have unusable vintages. Refer to *Technical Monthly*, Reference Guide for Circuit-Pack Vintages and Change Notices, for current information about usable vintages in a G3r V4 system.

Site Inspections

For the purposes of a G3r V4 upgrade, most G2 systems are already equipped with the correct lightwave transceivers (9823-A or -B). However, some G2 systems contain earlier versions of these components, and (based on a site inspection) these older components must be replaced.

See NOTE. The earlier versions of lightwave transceivers included the 4-series transceivers (that is, 4A through 4F). These transceivers supported fiber connections up to 7,000 feet apart; whereas the 9823-A supports connections up to 5,000 feet, and the 9823-B supports connections up to 25,000 feet. If the site inspection reveals that the older transceivers reside in the system, the correct transceivers are ordered and shipped according to a separate PEC.

NOTE:
The 9823-A transceiver is *not* a direct replacement for the 4-series transceiver (since a pair of 9823-A transceivers *cannot* replace a pair of 4-series transceivers supporting a connection of between 5,000 and 7,000 feet).

Power and Grounding

The new multicarrier PPN cabinet or any EPN cabinet added for the upgrade can be either AC- or DC-powered. If an added cabinet is powered differently from the existing cabinets, the existing cabinets do not have to be converted since mixed power configurations are allowed. However, the system's power and grounding must be modified so that the AC-powered cabinets are grounded to the same single-point ground bar as the DC-powered cabinets (see Figure 7-1).

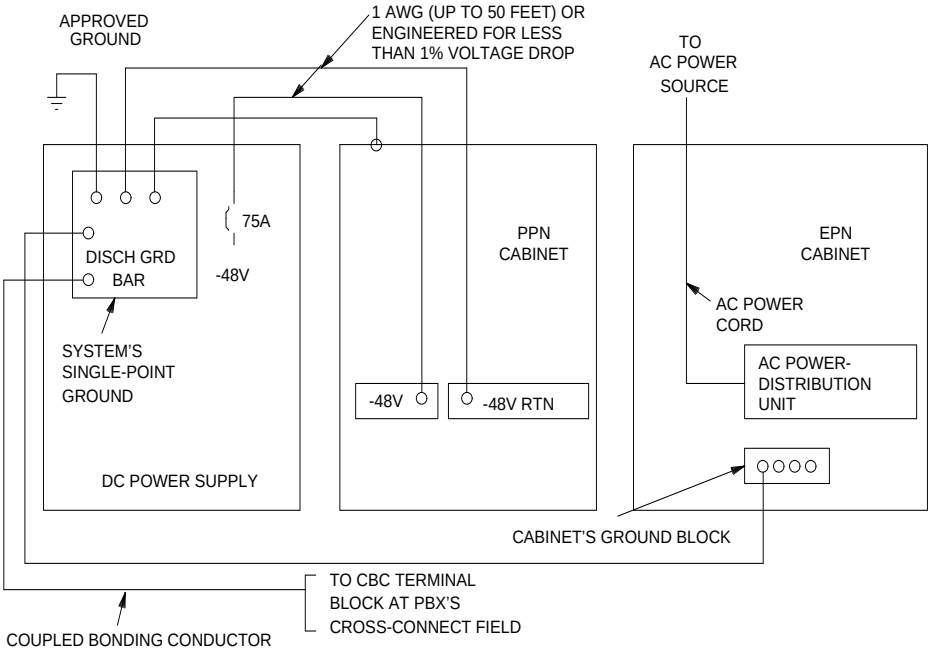

Figure 7-1. Typical Power and Grounding Arrangement for a Mixed AC/DC-Powered Multicabinet Configuration

See NOTE. If a new AC-powered cabinet is to be added, a separate AC receptacle is provided to support the new cabinet. This AC receptacle must not be shared with any other equipment and must not be controlled by a wall switch. For the convenience and safety of equipment-room personnel, the receptacle should not be located under the cross-connect field.

NOTE:
In contrast to the AC power that is likely to be currently available in a G2 equipment room, the new AC-powered PPN added for a G3r V4 upgrade uses 4-wire, 30A, 208 VAC power. Whereas:

- G2 traditional cabinets used 4-wire, 20A, 208 VAC power
- G2 universal cabinets used 3-wire, 30A, 208 VAC power
- Each cabinet in a G2 EPN stack used 3-wire, 15 or 20A, 115 VAC power

If a new DC-powered cabinet is to be added, refer to *DEFINITY Communications System Generic 1 and Generic 3 Installation and Test*, 555-230-104, Issue 5, for DC power and grounding requirements.

116A Isolator

Each G3-MT connected to a DC-powered cabinet, via the asynchronous Electronic Industries Association (EIA) RS-232 interface (behind a PPN control carrier or behind an EPN expansion control carrier), requires a 116A isolator. The isolator is inserted at the RS-232 interface between the G3-MT and the interface connector to isolate grounding between the system and external adjuncts.

Power-Failure Stations

During routine system operation, the ground for the power-failure stations is derived from the system's auxiliary cable. This ground will be disconnected during the upgrade, thus disabling the power-failure stations. Therefore, a ground strap will have to be run to the power-failure transfer panel. This strap should be connected shortly after power is removed and then disconnected just before power is restored to the upgraded system.

To minimize downtime during the G3r V4 upgrade, power-failure transfer equipment should be tested and, if need be, repaired before the hardware upgrade begins.

Software

The G3r V4 software and translations will be saved on the TN1656 Tape Drive circuit pack. This tape format is not compatible with the format of the G2 disk/tape system (DTS).

If the customer plans to emulate existing G2 translations in the upgraded G3r V4, then these translations must be copied to a spare tape and sent to Software Technical Support (STS) so that reports of the current G2 translations and a G3-MA diskette with basic station translations can be generated. After STS receives the spare tape, this process takes one week. STS must return the G2 reports and the diskette to the Project Manager before the upgrade can begin. For each G2 processor, two tapes (one system tape and one backup tape) must always be retained on site with the G2 system.

After the reports arrive, many features will require special attention because of feature differences, form changes, and potential naming conflicts in the upgrade process.

During the upgrade, the Software Specialist should implement G3r V4 translations that are appropriate for the customer's needs. For information to make the required changes, refer to:

- *DEFINITY Communications System Generic 3r Transition Reference*, 555-230-636
- *DEFINITY Communications System Generic 3 Feature Description*, 555-230-204
- *DEFINITY Communications System Generic 3 V4 Implementation*, 555-230-655

Alarm Connection

The D6 connector on G2 systems had 31 alarm-monitor appearances (Unit 1 to Unit 31) for external equipment. Whereas, the AUXILIARY connector on a DEFINITY G3r V4 PPN only has appearances for 1M (major alarm) and 1m (minor alarm). If the G2 system being upgraded used more than one major or more than one minor alarm-monitor appearance, these extra appearances will either have to be distributed to the AUXILIARY connector on an upgraded G3r V4 EPN, or they must be accommodated in another manner, such as paralleling them on the above connections.

The following tables correlate wall-field terminal numbers, connector pin numbers, lead colors, and lead designations for the G2 D6 and G3r V4 AUXILIARY connectors.

Table 7-1. Pinouts for D6 Connector on G2 System

Terminal #	Pin #	Color	Desig.	Terminal #	Pin #	Color	Desig.
1	26	W-BL	UNIT20	2	01	BL-W	UNIT19
3	27	W-O	UNIT22	4	02	O-W	UNIT21
5	28	W-G	UNIT24	6	03	G-W	UNIT23
7	29	W-BR		8	04	BR-W	UNIT25
9	30	W-S	UNIT27	10	05	S-W	UNIT26
11	31	R-BL	UNIT29	12	06	BL-R	UNIT28
13	32	R-O	UNIT31	14	07	O-R	UNIT30
15	33	R-G	AUXCTMP	16	08	G-R	UNIT32
17	34	R-BR	EXTEQMN	18	09	BR-R	EXTEQMJ
19	35	R-S	AUXCRCT	20	10	S-R	AUXCHO
21	36	BK-BL	AUXCCB	22	11	BL-BK	AUXCFRQ
23	37	BK-O	AUXCFAN	24	12	O-BK	
25	38	BK-G	EXTPRMJ	26	13	G-BK	EXTPRMN
27	39	BK-BR	UNIT2	28	14	BR-BK	UNIT1
29	40	BK-S	UNIT4	30	15	S-BK	UNIT3
31	41	Y-BL	UNIT6	32	16	BL-Y	UNIT5
33	42	Y-O	UNIT8	34	17	O-Y	UNIT7
35	43	Y-G	UNIT10	36	18	G-Y	UNIT9
37	44	Y-BR		38	19	BR-Y	UNIT11
39	45	Y-S	UNIT13	40	20	S-Y	UNIT12
41	46	V-BL	UNIT15	42	21	BL-V	UNIT14
43	47	V-O	UNIT17	44	22	O-V	UNIT16
45	48	V-G		46	23	G-V	UNIT18
47	49	V-BR	RING0	48	24	BR-V	TIP0
49	50	V-S	RING1	50	25	S-V	TIP1

Table 7-2. Pinouts for Auxiliary Connector on G3r V4 System

Terminal #	Pin #	Color	Desig.	Terminal #	Pin #	Color	Desig.
1	26	W-BL	AUXMJ	2	01	BL-W	GRD
3	27	W-O	AUXMN	4	02	O-W	GRD
5	28	W-G		6	03	G-W	GRD
7	29	W-BR		8	04	BR-W	GRD
9	30	W-S		10	05	S-W	GRD
11	31	R-BL		12	06	BL-R	GRD
13	32	R-O		14	07	O-R	GRD
15	33	R-G		16	08	G-R	
17	34	R-BR		18	09	BR-R	
19	35	R-S		20	10	S-R	
21	36	BK-BL	XFER48	22	11	BL-BK	GRD
23	37	BK-O	XFER48	24	12	O-BK	GRD
25	38	BK-G	XFER48	26	13	G-BK	GRD
27	39	BK-BR	XFER48	28	14	BR-BK	GRD
29	40	BK-S	XFER48	30	15	S-BK	GRD
31	41	Y-BL	XFER48	32	16	BL-Y	GRD
33	42	Y-O	XFER48	34	17	O-Y	GRD
35	43	Y-G		36	18	G-Y	
37	44	Y-BR	GRD	38	19	BR-Y	ACC48A
39	45	Y-S	GRD	40	20	S-Y	ACC48B
41	46	V-BL	GRD	42	21	BL-V	ACC48C
43	47	V-O		44	22	O-V	
45	48	V-G	EXT_ALM	46	23	G-V	EXT_ALM_RT
47	49	V-BR		48	24	BR-V	
49	50	V-S	INADS TIP	50	25	S-V	INADS RING

Software-Translation Upgrade

The G3r V4 software and translations will be saved on the TN1656 Tape Drive circuit pack. This tape format is not compatible with the format of the G2 disk/tape system (DTS).

During an upgrade from a G2 to a G3r V4, STS generates TRACS reports (that show the current software translations) and G3-MA diskettes (with basic station translations) in the G2 system and sends the reports to the Project Manager. To enable these activities, replace the system tape with a spare G2 tape. (Spare G2 tape cartridges can be acquired from STS before the upgrade.) Then, copy the current G2 translations to the spare tape, and overnight mail this tape to STS. Also, put the original system tape back into the system.

If possible, the customer should put a freeze on any new translations while the spare tape is being converted. If not, be sure that the customer's switch administrator keeps detailed records of any translation changes made during that interval. These records will supplement the TRACS reports to facilitate the transition from G2 to G3r V4 software translations.

The TRACS reports with the current G2 translations must be on-site before the upgrade begins.

Save Translations

1. Log in at the Manager II on the G2.
2. Enter **`rtx`** (run tape, execute). Press [RETURN]. This command instructs the system to write all translation information from memory to the tape.
3. Remove the system tape, install the backup tape, and wait for the tape to retension.
4. Enter **`rtx`** (run tape, execute). Press [RETURN].

Make Source Tape for TRACS Report

A spare G2 tape must be acquired from STS before performing the following steps. For each processor, there must always be two tapes on site with the G2 system. Do not send a system or backup tape to STS.

After performing the previous procedures, copy the G2 translations to the spare tape that will be used to make the TRACS report. Perform the following procedures:

1. Remove the backup tape, install the spare tape, and wait for the tape to retension.
2. Enter **`rtx`** (run tape, execute). Press (RETURN). This command instructs the system to write all translation information from memory to the tape.
3. Remove the source tape.
4. Insert the system tape.

The tape removed in Step 3 should be mailed (with next-day delivery) to STS for use in making the G2 TRACS report.

System Upgrades

There are many configurations of DEFINITY G2s in the field. In terms of both hardware and software, each system can have a unique configuration. However, to simplify G3r V4 upgrades:

- The existing common control is always replaced by a PPN
- Except for G2 systems with two modules, an existing time-multiplexed switch is always replaced by one or two switched nodes
- Existing traditional modules are replaced by an EPNs[1]
- Existing universal modules are upgraded to EPNs

A new multicarrier cabinet would then always serve as the PPN and also, if necessary, as the switched node. If a G2 universal module is upgraded to a G3r V4 EPN, hardware changes (including carrier replacement) are required.

This section gives a sequential list of the steps required to upgrade the system.

1. There is not necessarily a one-to-one correspondence between G3r V4 EPNs and G2 modules. With careful hardware and traffic engineering, an upgraded G3r V4 can have fewer EPNs than the G2 had modules.

G2 to G3r V4

Refer to *DEFINITY Communications System Generic 1 and Generic 3 Installation and Test*, 555-230-104, Issue 5, to install the new PPN cabinet.

If traditional modules are being replaced by EPNs, refer to *DEFINITY Communications System Generic 1 and Generic 3 Installation and Test*, 555-230-104, Issue 5, to install the new EPNs.

Upgrade Single-Carrier Cabinet Stack

An existing universal-module cabinet stack is always upgraded to an EPN. Upgrade the modules using the following procedures.

A G2 universal module is upgraded to a G3r V4 EPN by:

- Removing the module control cabinet occupying position ‘‘A’’ or logical positions ‘‘A’’ and ‘‘B’’
- Installing the J58890N-1 expansion control cabinet in position ‘‘A’’
- Replacing the module control in logical position ‘‘B’’ with a J58890H-1 port cabinet (if desired) or changing the port cabinets’ address plugs
- Adding the G3r V4 circuit packs
- Restructuring the port circuits as required
- Adding G3r V4 circuit packs to the ‘‘B’’ port cabinet for critical reliability if required

Upgrading a G2 universal module with single-carrier cabinets requires, at a minimum, that the module control cabinet be replaced. Since the module control cabinet is the bottom cabinet in the stack, the stack will have to be completely dismantled. Properly label every cable to be disconnected so that reconnecting them is easier.

Prerequisite Hardware

The equipment in Table 7-3 *must* be on-site before the upgrade begins. Ensure that the tapes are G3r V4 tapes.

To place a claim for missing equipment, as part of the Streamlined Implementation process, call "1-800-772-5409," and respond to the call prompter.

Table 7-3. Required Hardware

Equipment	Description	Quantity
PEC 6300-07X[U]	Processor Port Network	1
J58890N-1	Expansion Control Cabinet	1
106647985	TN775B Maintenance	1
103281788	TN570 Expansion Interface	w/o CSS: 2, 4, 6, or 12 (Note 1) w/CSS: 1 or 2 per port network
103281812	TN573 Switched Node Interface	w/CSS: 1 or 2 per port network
63300A	FL2P-P-XX Fiber Cable	1 to 12 (Note 2)
H600-278 G1	EI-to-SNI Metallic Cable	w/CSS: 2
H600-278 G2	EI-to-SNI Metallic Cable	w/CSS: 1 or 2
106455348 or 106455363	9823-A Lightwave Transceiver 9823-B Lightwave Transceiver	2 to 12 (Note 3) 2 to 12 (Note 3)
J58890TF	Tape Cartridge	2 or 4 (Note 4)
106689516	TN771D Maintenance Test	1 or 2 (Note 5)
846307817	Lower Rear Cover	1 (Note 6)
846307809	Ground Plate	1 (Note 7)
H600-248 G1	ICC Cables	2 (Note 7)
846408268	Earthquake Front Panel	1 (Note 8)
846408386	Earthquake Ground Plate	1 (Note 8)
846408250	Stiffener	1 (Note 8)
846408243	Earthquake Front Mounting Angle	1 (Note 8)

Notes:

1. Depending on the reliability type and on the number of G3r V4 port networks. Two TN570s are required for a standard- or high-reliability system with two port networks; six with three port networks. Four are

required for a critical-reliability system with two port networks; twelve with three port networks. The factory has installed the necessary TN570s in the new PPN. The rest are shipped loose with the EPN equipment.

2. Depending on the reliability type, on the number of G3r V4 port networks, and on whether the networks are remotely separated. One fiber cable is required for a standard- or high-reliability system with two collocated port networks; three with three collocated port networks. Two are required for a critical-reliability system with two collocated port networks; six with three collocated port networks. (When the port networks are remotely separated, each value doubles.)
3. Assuming acceptable lengths, the fiber(s) that previously connected an upgraded G2 universal module (*not* a traditional module) to the G2 TMS have the correct transceiver connectors and, therefore, can be reused.
4. Depending on the reliability type and on the number of G3r V4 port networks. Two transceivers are required for a standard- or high-reliability system with two port networks; six with three port networks. Four are required for a critical-reliability system with two port networks; twelve with three port networks.
5. For each fiber connection, one 9823-type lightwave transceiver is installed in one port network, and another 9823-type transceiver in the adjacent port network. A 9823-type transceiver can be reused from each upgraded G2 universal module. Additional 9823-type transceivers, ordered separately, are also shipped loose with the EPN equipment.
6. Depending on the reliability type of the G3r V4 system. Two tapes are required for a standard-reliability system; four for a high-reliability system.
7. Depending on the number of EPNs in a critical-reliability G3r V4 system.
8. Required for the ‘‘B’’ port cabinet of a critical-reliability G3r V4 EPN. (May not have been installed during R1V3 System 75-to-G2 universal module upgrade.)
9. Required for a critical-reliability G3r V4 EPN.
10. Required if earthquake protection is provided.

Required Tools

The following tools and items may be required during the upgrade:

- Flashlight or high-intensity AC drop light
- Power screwdriver (optional)
- 1/4-inch flat-blade screwdriver
- 1/4-inch socket with ratchet (optional)
- Long-nose pliers to straighten backplane pins
- Static-proof or original circuit-pack packaging for transporting circuit packs
- Labels for identifying the port circuit packs and cables attached to the rear of cabinets
- Receptacle for holding screws
- One dozen #8 self-tapping screws
- Repair kit for backplane pins (KS-22876 L2 or equivalent)
- One copy of each of the following manuals:
  - *DEFINITY Communications System Generic 3r V4 Maintenance*, 555-230-105, Issue 4
  - *DEFINITY Communications System Generic 3 V4 Implementation*, 555-230-655

Preventive Maintenance

During the G3r V4 upgrade, follow routine preventive maintenance procedures on the system to be upgraded. For information about the procedures and necessary equipment, refer to the “Preventive Maintenance’’ section in *DEFINITY Communications System Generic 3r V4 Maintenance*, 555-230-105, Issue 4.

Verify System Status

Before proceeding, the system should be examined for alarms, and every problem should be corrected. The system must be alarm-free.

Label Cables

To make reconnecting the cables simpler and more reliable, label every connector cable associated with the system (if not already labeled).

Power Down System

1. At each PPN cabinet's power supply, set the main circuit breaker to OFF.
2. At each EPN cabinet's power supply, set the main circuit breaker to OFF.

Disconnect Power and Grounding

1. Disconnect the cabinet power cords from the rear of each cabinet.
2. Disconnect the coupled bonding conductor.
3. Disconnect the 6-AWG cabinet ground wire from the ground bar in the cabinet.

NOTE:
A screwdriver is required to loosen and tighten the bolts that secure the ground wire to the ground bar.

Install Power-Failure Transfer Ground Strap

CAUTION:
To avoid contaminating single-point ground, do not connect the ground strap while the system is powered up.

1. Connect a strap's lead either to pin 49 of the connecting block or to pin 49 of the CAP (cable access panel) associated with the power-failure transfer panel.
2. Route the other lead to an approved ground source.
3. Connect the lead to the approved ground source.

Remove Door and Panels and Disconnect Cables

1. Remove the front door from all of the universal module's cabinets.
2. Disconnect the previously labeled connector cables attached to the universal module.
3. Remove the ground plate(s) from between all of the universal module's cabinets.
4. Remove the top and bottom rear covers from all of the universal module's cabinets.

Remove Circuit Packs

See WARNING. Remove all circuit packs and power units from the module control cabinet. Store the circuit packs in the static-proof packaging.

WARNING:
Before inserting or removing a circuit pack from a cabinet, put on a wrist strap and attach its plug or clip to the cabinet's frame.

Disconnect TDM/LAN Cables

See NOTES. Remove and retain all of the TDM/LAN cables. They will be reused.

NOTE:
Before disconnecting each cable, note the position of the cable.

NOTE:
Since duplicated G2 module control carriers reside in the same single-carrier cabinet, ICC cables are not required to interconnect these carriers. However, new ICC cables (H600-248 G1) will be installed to interconnect the ''A'' and ''B'' carriers residing in separate cabinets of the upgraded G3r V4 EPN.

Remove the Existing Module Control Cabinet

Since the module control cabinet is located at the bottom of the universal module, the stack will have to be completely dismantled. At this point in the upgrade, all the power, grounding, TDM, ICC, and connector cables should be disconnected. Before you proceed, ensure that there is adequate space available to place each cabinet in an out-of-the-way location as the stack is dismantled.

1. Remove the cabinet clip between each cabinet or front earthquake plate as provided.
2. Remove rear ground plate.
3. See DANGER. Remove the port cabinets from the stack, and put them in a safe place.

   DANGER:
   A port cabinet may weigh as much as 125 pounds and requires two handlers to unstack the cabinet. If a third or fourth cabinet is to be removed, remove the front door, power supply, and circuit packs from the cabinet to lighten the load. Make sure the two handlers are capable (size and strength) of lifting the cabinet from its position.

4. If the module control cabinet in position ‘‘A’’ is earthquake mounted, remove the hardware securing the cabinet to the floor.
5. See NOTE. Move the existing module control cabinet out of its present location. It will not be reused, so it can be removed at this time.

   NOTE:
   If the universal module being upgraded is part of a critical-reliability G2 system, both the ‘‘A’’ and ‘‘B’’ logical carriers reside in this cabinet. In this case, two sets of module control circuit packs occupy both sides of the cabinet.

Unpack and Inspect Expansion Control Cabinet for Damage

1. See DANGER. Unpack cabinet.

   DANGER:
   Take care to avoid injury while cutting and removing bands.

2. Visually inspect cabinet for any physical damage caused during shipping. Report any damage for appropriate action per local procedures.

Remove Front Door

Remove the front door of expansion control cabinet.

1. Use a screwdriver, and turn door-latch screw counterclockwise one quarter turn to release door (see Figure 7-2).
2. Lift door from lower slots and remove from cabinet.

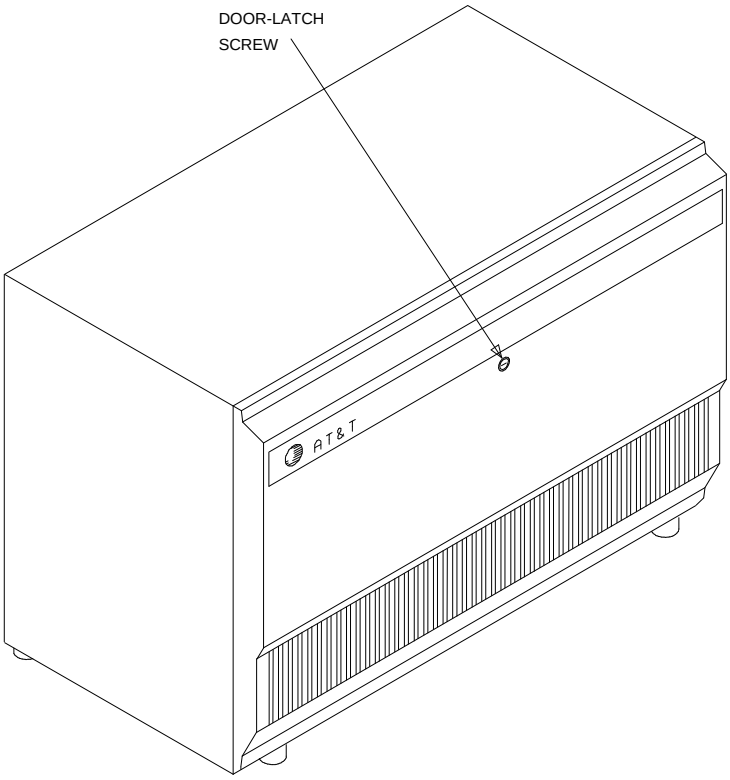

Figure 7-2. Location of Door-Latch Screw for G3r V4 Cabinet

Install Expansion Control Cabinet

1. See DANGER. Position the J58890N expansion control cabinet ‘‘A’’ at the desired location.

   DANGER:
   The cabinet may weigh as much as 130 pounds and requires two handlers. Use caution to avoid injury.

2. If earthquake protection is not required, install hole plugs (provided with cabinet) in the holes previously occupied by the two carriage bolts at the bottom rear of the cabinet.

Add Earthquake Protection

If earthquake protection is required:

1. Place the front mounting angle at the location selected for the front of the expansion control cabinet.
2. Using the angle as a template, mark the locations of the two mounting bolts.
3. Drill two holes 1/2 inch in diameter and 1-1/2 inches deep at the spots marked in Step 2.
4. Mount the front mounting angle to the floor (Figure 7-3).
5. Move the cabinet back into place, and temporarily stabilize the cabinet by attaching the cabinet to the angle with two No. 12-24 by 1/2-inch thread-forming screws.
6. Insert a pencil or marker through the two holes (previously occupied with carriage bolts) in the bottom rear of the cabinet, and mark the floor directly beneath each hole.
7. Remove the two screws installed in Step 5, and move the cabinet out of the way.
8. Drill two holes 1/2 inch in diameter and 1-1/2 inches deep at the spots marked in Step 6.
9. Move the cabinet back into place.
10. Attach the cabinet to the front mounting angle using four No. 12-24 by 1/2-inch thread-forming screws.

11. In the rear of the cabinet, lay the stiffener on the bottom of the cabinet, aligning the stiffener with the holes in the bottom of the cabinet.
12. Fasten the cabinet to the floor (Figure 7-4).

NOTE:
This procedure is only a portion of the complete earthquake protection package. According to the logical installation sequence, instructions for adding the earthquake front plate and earthquake ground plate will be given at the appropriate location in this chapter.

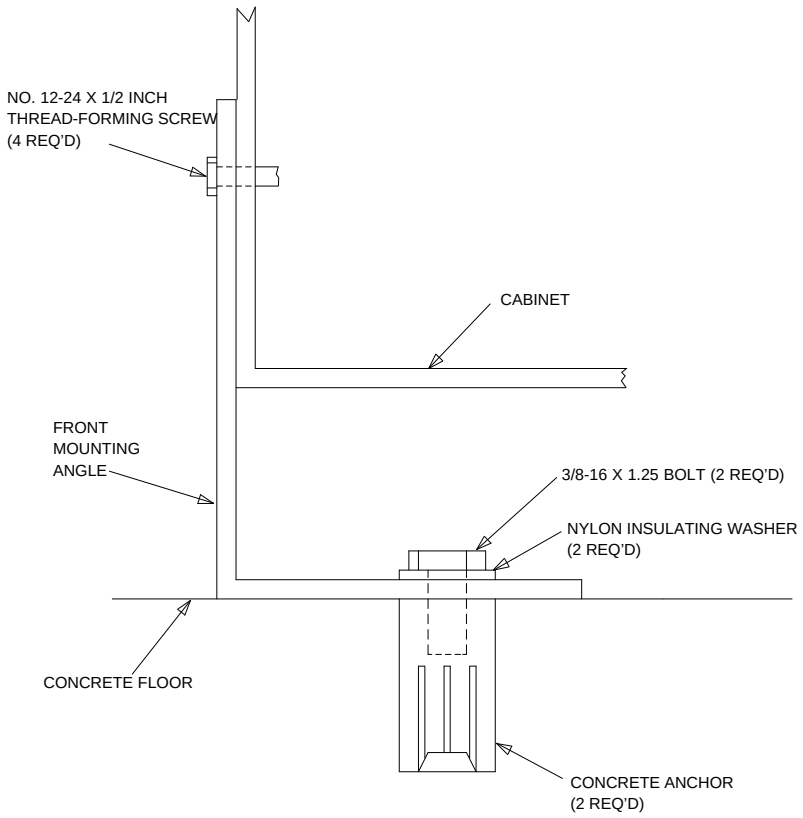

Figure 7-3. Front Mounting Angle — Concrete Floor

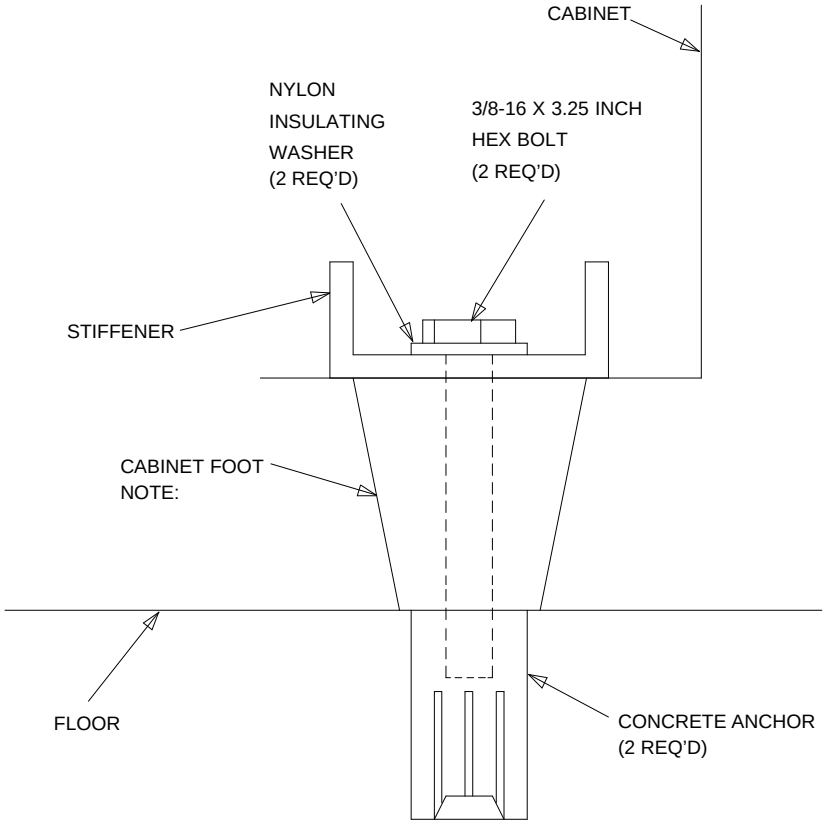

SIDE VIEW

NOTE: BOLT DOES NOT RUN THROUGH CABINET FOOT

Figure 7-4. Cabinet Earthquake Mounting — Concrete Floor

Install Port Cabinets

See DANGER and NOTE. Place the port cabinets into the positions from which they were previously removed (see Figure 7-5).

DANGER:
The cabinet may weigh as much as 130 pounds and requires two handlers. Use caution to avoid injury.

NOTE:
If a critical-reliability G2 universal module is being upgraded to a G3r V4 EPN, the second logical carrier in the G2 module control cabinet (J58890P) can be replaced by a new J58890H port cabinet in position ‘‘B.’’

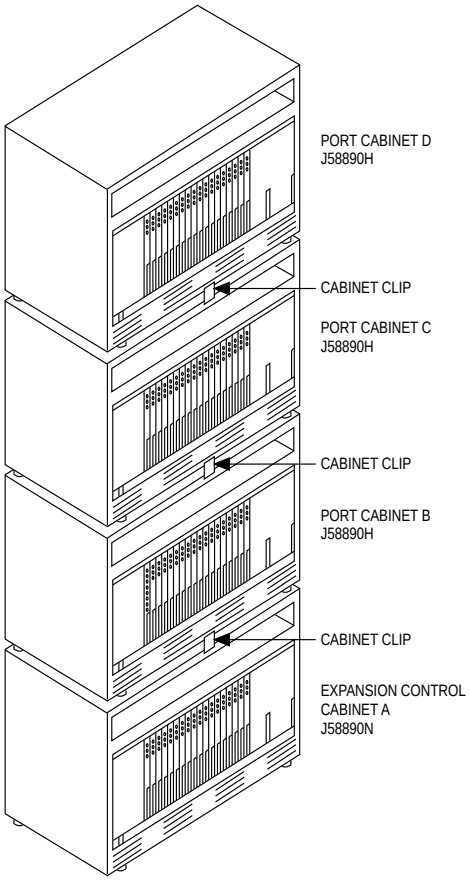

Figure 7-5. 4-Cabinet G3r V4 EPN — Front View, Doors Removed

Install Circuit Packs

1. See WARNINGS. Replace the circuit packs and power supplies in port cabinets ‘‘D’’ and “E’’ if they were previously removed.

   WARNING:
   Before inserting or removing a circuit pack from a cabinet, put on a wrist strap and attach its plug or clip to the cabinet’s frame.

   WARNING:
   These replaced port circuit packs must conform to the usable vintage requirements for a G3r V4 system (see Reference Guide for Circuit-Pack Vintages and Change Notices).

2. See preceding WARNING and following NOTE. Using the following figure, the label, and the annotated ‘‘list configuration all’’ (provided with the G3r V4 tape), install the G3r V4 control circuit packs into the new expansion control cabinet.

   NOTE:
   Currently, both TN768 Tone Clock circuit packs reside in port slots of the universal module being upgraded. As part of this step, relocate one of these circuit packs to the ‘‘TONE CLOCK’’ slot of carrier “A.’ AT&T recommends that you upgrade to the TN2182 Tone-Clock.’

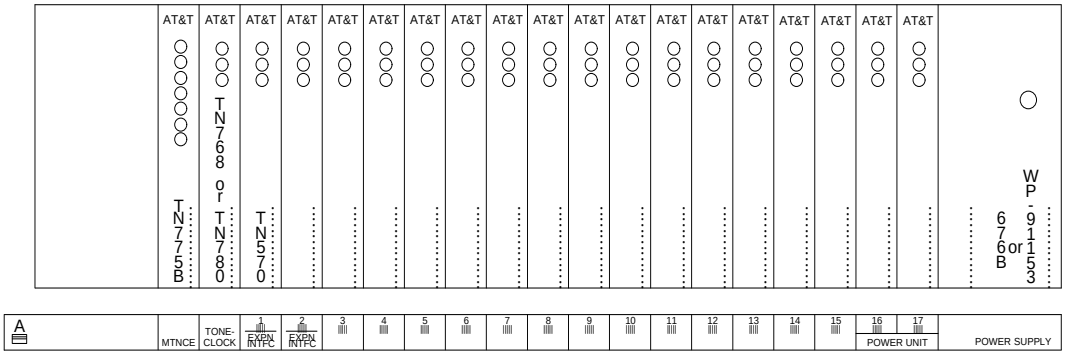

Figure 7-6. Circuit-Pack Locations in G3r V4 Expansion Control Cabinet

3. See preceding WARNINGS and following NOTE. For an EPN in a critical reliability G3r V4 system, install the other TN768 Tone-Clock and a TN570 EI (see Table 7-4) in slots ‘‘1’’ and ‘‘2’’ of port cabinet ‘‘B.’’

NOTE:
Installing these circuit packs may require a port circuit pack (in slot 3B02) to be moved. If not done before the upgrade, move this circuit pack to an available slot now. Its port circuits will have to be retranslated after the system is rebooted with the G3r V4 tape.

Table 7-4. TN570 Requirements

Cabinet	2 Port Networks w/o Critical Reliability	2 Port Networks w/Critical Reliability	3 Port Networks w/o Critical Reliability	3 Port Networks w/Critical Reliability
PPN	1	2	2	4
EPN 1	1	2	2	4
EPN 2	N/A	N/A	2	4

Change Cabinet Address Plugs

If the G2 universal module was not duplicated or if a duplicated module control cabinet was removed from position ‘‘B’’ and was not replaced with a new port cabinet, the upgraded EPN’s port cabinets occupy incorrect positions in the cabinet stack. If so, the location of each port cabinet’s address plug must be changed to reflect the cabinet’s current position (see Figure 7-7).

Behind each port cabinet, find either one or two address plugs attached to either two or four of the six backplane pins to the right of the pin-field block for slot 00.

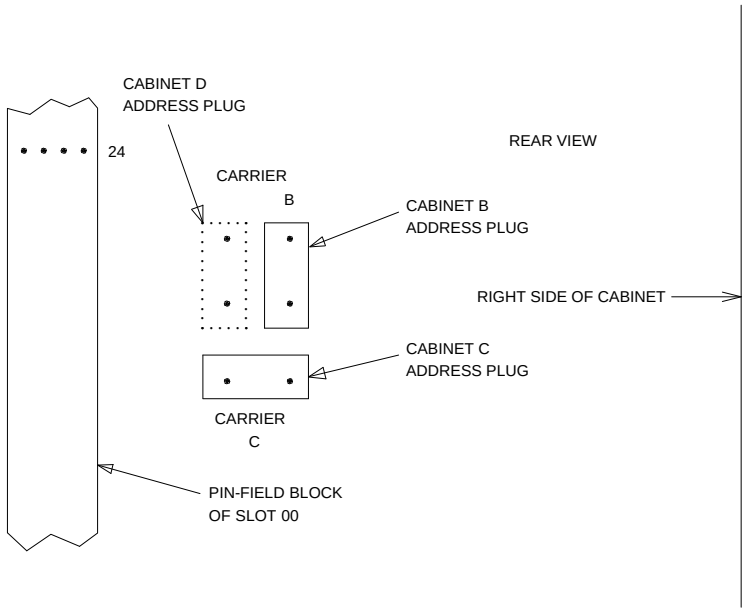

Figure 7-7. Cabinet Address-Plug Location

Install TDM/LAN Bus Terminators

1. Verify that the AHF110 TDM/LAN bus terminator is installed on the right side of the control cabinet looking from the back of the cabinet as shown in Figure 7-8.
2. Verify that the AHF110 TDM/LAN bus terminator is installed on the top port cabinet.

Connect TDM/LAN Cables and ICC Cables

1. Route and connect the TDM/LAN cables (see Figure 7-8). If any of the G2 port cabinets (being upgraded to G3r V4 cabinets) were originally R1V3 System 75 port cabinets, use the following steps to route a cable between an R1V3 upper cabinet and cabinet beneath it. Do not run a new cable through the existing slot in the rear shelf of the upper cabinet.
   a. Loosen two left (as viewed from the rear) connector-panel screws, then remove the other two connector-panel screws.
   b. Attach the TDM/LAN cable to the backplane, and slide the cable between the connector panel and the rear shelf (not through the existing slot in the shelf). Route the cable along the bottom of the cabinet.
   c. Replace and tighten the connector-panel screws.
2. Connect the new ICC cables (H600-248 G1) as shown in Table 7-5 and Figure 7-9 and Figure 7-10.
3. On the ‘‘A’’ carrier, verify the CFY1 current limiter (CURL) is connected to pin-field block ‘‘00’’ (see Figure 7-9). The CURL’s components should be on the left side as viewed from the rear.

Table 7-5. Intercabinet Cable Connections

Connect ICC Cables				
	From		To	
	Carrier	Pin-Field Blocks	Carrier	Pin-Field Blocks
EPN	J58890N	ICCA ICCB	J58890H	ICCA ICCB

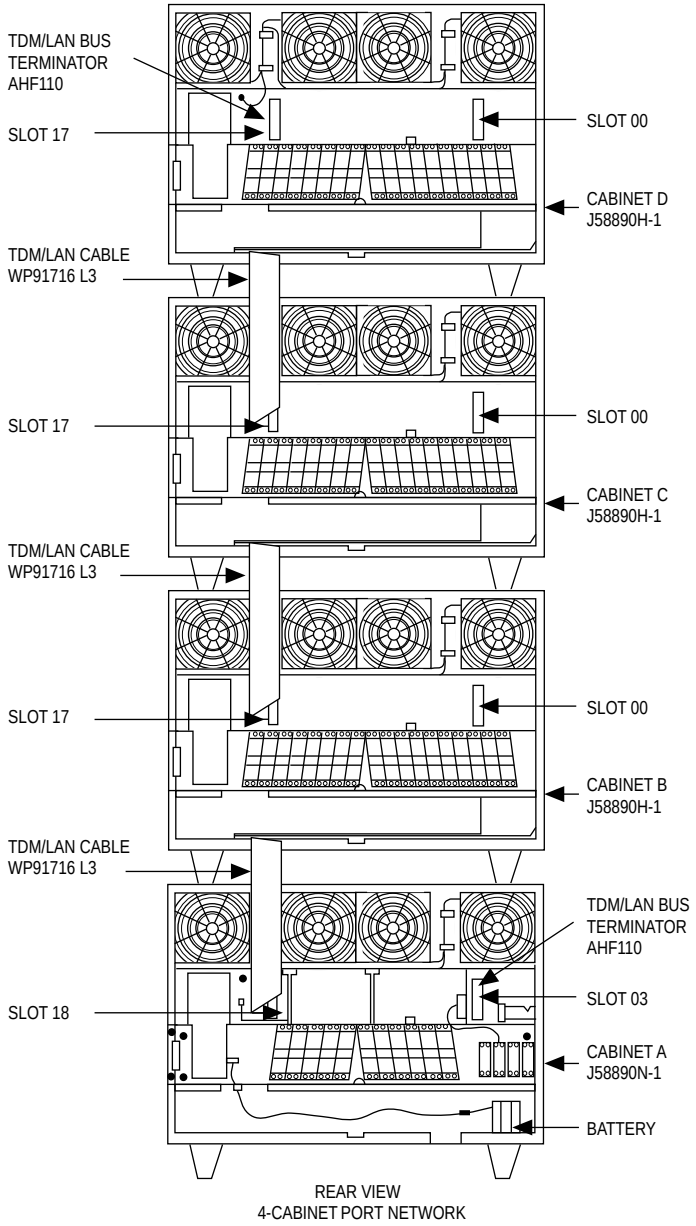

Figure 7-8. TDM/LAN Connections for G3r V4 EPN

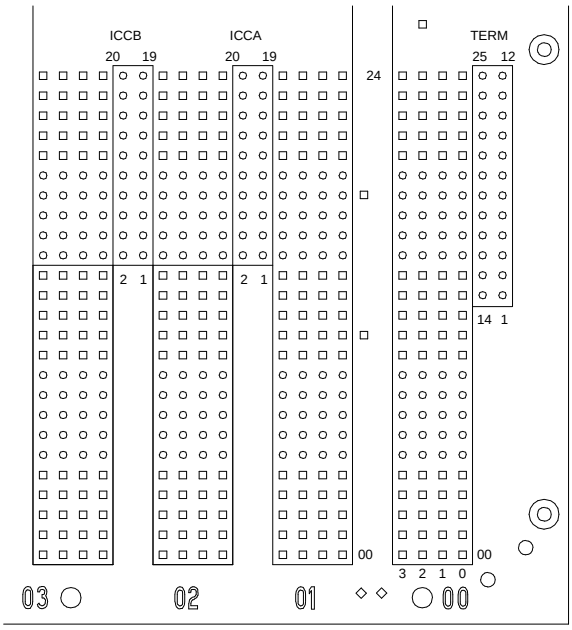

Figure 7-9. ICC Pin-Field Blocks on J58890N-1 Expansion Control Cabinet

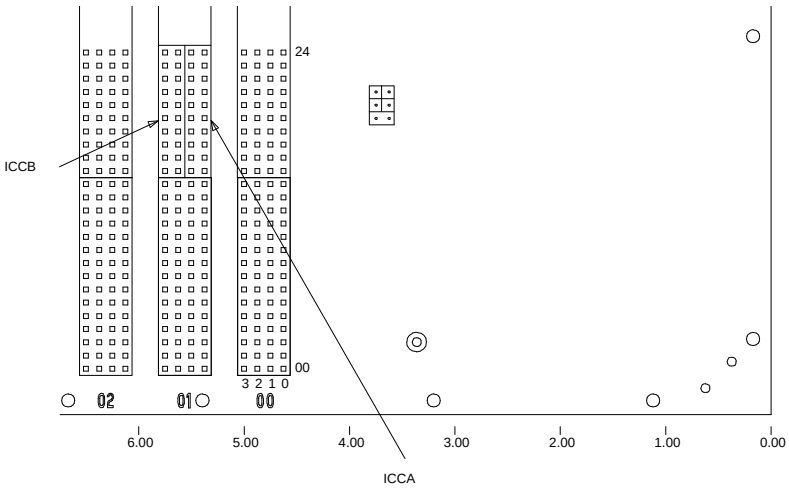

Figure 7-10. ICC Pin-Field Blocks on J58890H-1 Port Cabinet

Interconnect Port Networks — Standard-Reliability G3r V4 System

See NOTES. Fiber-optic cabling terminated to 9823A lightwave transceivers can interconnect port networks (PNs) located up to 4,900 feet (about 9/10 mile) apart. Whereas, fiber-optic cabling terminated to 9823B lightwave transceivers can interconnect port networks located up to 25,000 feet (about 4.7 miles) apart. When available and whenever the desired distance between the port networks is less than 25,000 feet, fiber is the preferred medium for interconnecting port networks, providing significantly higher-bandwidth connectivity than DS1C remoting.

NOTE:
As always, these distance limitations are approximate measurements of the *actual* fiber right-of-way (not of the shortest linear distance) between the two endpoints.

NOTE:
It is important to label every cable that you install. For details, refer to the section, *Labels for Fiber-Optic Cables*, in Appendix E of the installation manual.

NOTE:
Throughout these procedures, remember to keep track of which fiber is attached to which connector on each lightwave transceiver. This section provides figures offering the suggested way of making these connections.

The connectors on the lightwave transceivers are labeled either “TX” (transmit) or “RX” (receive), while the fibers attached to each connector are numbered either ‘‘1’’ or ‘‘2.’’ A viable fiber connection is only made when both fibers in each cable (that is, ‘‘1’’ and ‘‘2’’) route from the “TX” connector of a port network to the “RX” connector of its adjacent port network. For an example, refer to Figure 7-12.)

NOTE:
For implementation details, refer to the ‘‘Fiber Link Administration’’ sections of *DEFINITY Communications System Generic 3 V4 Implementation*, 555-230-655.

Collocated Port Networks

For a standard-reliability system with one collocated expansion port network, one fiber-optic cable (FL2P-P-XX) and two lightwave transceivers (9823-type) are required to directly connect the networks.

For a standard-reliability system with two collocated expansion port networks, three fiber-optic cables (FL2P-P-XX) and six lightwave transceivers (9823-type) are required to directly connect the networks.

NOTE:
For the FL2P-P-XX fiber-optic cable, the -XX suffix represents the length of the cable in feet. Based on floor-plan considerations, the length of these cables may vary. However, 20-foot cables are normally adequate for a G3r V4 with two port networks.

See NOTE. For collocated cabinets, the fiber-optic cables should be routed directly from the PPN to each EPN cabinet. Since, for this upgrade, a ''DEFINITY style'' PPN cabinet is collocated with a single-carrier cabinet stack, the preferred routing is to run the cables *down* the cable tray and out the bottom of the PPN cabinet. The cables are then run to the EPN cabinet and up the outside of the rear panels to the desired carrier level.

If, for this upgrade, a ''DEFINITY style'' PPN cabinet is also collocated with another ''DEFINITY style'' multicarrier EPN cabinet, the preferred routing is to run the cables *up* the cable tray and out the top of the PPN cabinet. The cables are then run to the other cabinet, through the top of the cabinet, and down the cable tray to the desired carrier level.

NOTE:
Refer to Appendix E of *DEFINITY Communications System Generic 1 and Generic 3 Installation and Test*, 555-230-104, Issue 5, for additional guidelines about fiber routing.

Fiber-Remoted Port Networks

For a standard-reliability system with one fiber-remoted expansion port network, two fiber-optic cables (FL2P-P-XX), two lightwave transceivers (9823-type), and two lightwave-interface units (provided by the PSC) are required.

For a standard-reliability system with two fiber-remoted expansion port networks, six fiber-optic cables (FL2P-P-XX), six lightwave transceivers (9823-type), and six lightwave-interface units (provided by the PSC) are required.

DS1C-Remoted Port Networks

For a standard-reliability system with one DS1C-remoted expansion port network, two DS1C circuit packs (TN574), two DS1C-to-EI cables (846448637 and/or 846448645), two H-600-348 cables, from one to four pairs of channel service units (CSUs), and from one to four pairs of wall-field cables (provided with the CSUs) are required.

For a standard-reliability system with two DS1C-remoted expansion port networks, this arrangement requires:

- Six DS1C circuit packs (TN574)
- Six DS1C-to-EI cables (846448637 and/or 846448645)
- Six H-600-348 cables
- Three, six, nine, or twelve pairs of channel service units (CSUs)
- Three, six, nine, or twelve pairs of wall-field cables (provided with the CSUs)

For One or Two Collocated Expansion Port Networks

1. Behind port carrier B of the multicarrier PPN (see Figure 7-11, Figure 7-12, Figure 7-13, and Figure 7-14):
   - Install a 9823-type lightwave transceiver on the connector at slot 1B02.
   - Connect one end of the fiber-optic cable to the lightwave transceiver at slot 1B02.
   - Route the fiber-optic cable from the lightwave transceiver to the cabinet cable tray and out of the cabinet. Then route the cable into the cable tray of the EPN cabinet.
2. Behind control cabinet A of EPN stack 2:
   - Install the same kind (either 9823-A or 9823-B) of lightwave transceiver on cable connector at slot 2A01.
   - Connect the other end of the fiber-optic cable coming from the PPN to the lightwave transceiver at slot 2A01.
   - Delicately attach the fiber-optic cable (with cable ties) to the wall of the cable tray at the built-in cable-tie positions.
   - At top of cabinet, coil up the surplus length of fiber-optic cable. Delicately attach the coil to the cable-tray wall with cable ties.

For Two Collocated Expansion Port Networks

1. Behind port carrier C of the multicarrier PPN:
   - Install a 9823-type lightwave transceiver on the connector at slot 1C02.
   - Connect one end of the fiber-optic cable to the lightwave transceiver at slot 1C02.
   - Route the fiber-optic cable from the lightwave transceiver to the cabinet cable tray and out of the cabinet. Then route the cable into the cable tray of the EPN cabinet.
2. Behind control cabinet A of EPN stack 3:
   - Install the same kind (either 9823-A or 9823-B) of lightwave transceiver on cable connector at slot 3A01.
   - Connect the other end of the fiber-optic cable coming from the PPN to the lightwave transceiver at slot 3A01.
   - Delicately attach the fiber-optic cable (with cable ties) to the wall of the cable tray at the built-in cable-tie positions.
   - At top of cabinet, coil up the surplus length of fiber-optic cable. Delicately attach the coil to the cable-tray wall with cable ties.
3. Behind control cabinet A of EPN stack 2:
   - Install a 9823-type lightwave transceiver on the connector at slot 2A02.
   - Connect one end of the fiber-optic cable to the lightwave transceiver at slot 2A02.
   - Route the fiber-optic cable from the lightwave transceiver to the cabinet cable tray and out of the cabinet. Then route the cable into the cable tray of the EPN cabinet.
4. Behind control cabinet A of EPN stack 3:
   - Install the same kind (either 9823-A or 9823-B) of lightwave transceiver on cable connector at slot 3A02.
   - Connect the other end of the fiber-optic cable coming from the PPN to the lightwave transceiver at slot 3A02.
   - Delicately attach the fiber-optic cable (with cable ties) to the wall of the cable tray at the built-in cable-tie positions.
   - At top of cabinet, coil up the surplus length of fiber-optic cable. Delicately attach the coil to the cable-tray wall with cable ties.

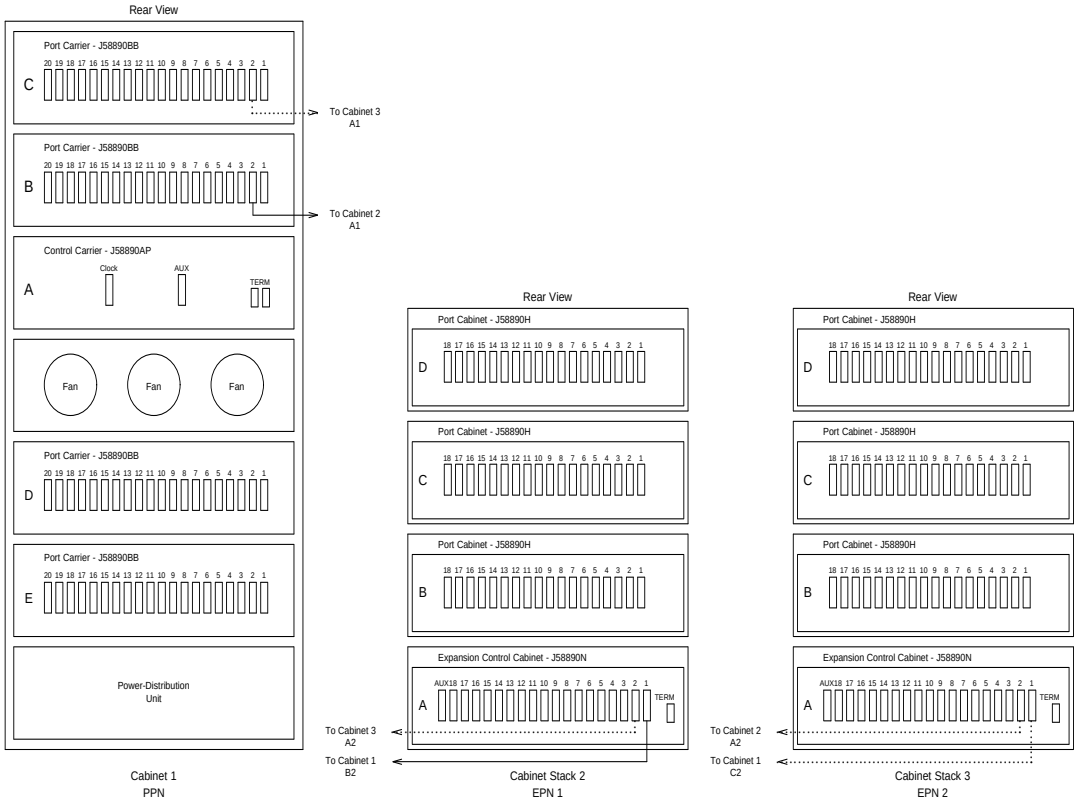

Figure 7-11. Standard-Reliability G3r V4 with Three Port Networks

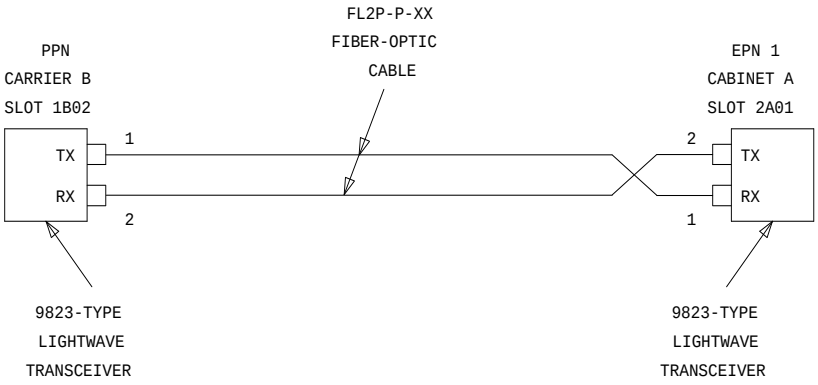

Figure 7-12. Fiber-Optic Connections PPN to EPN1

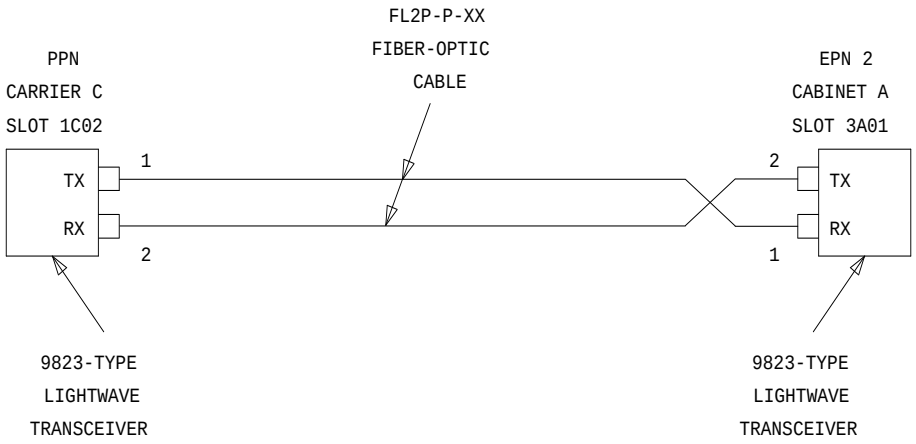

Figure 7-13. Fiber-Optic Connections PPN to EPN2

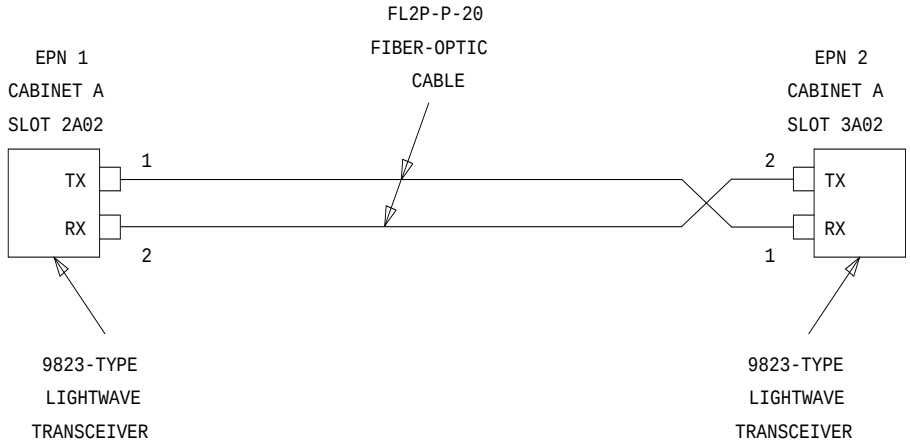

Figure 7-14. Fiber-Optic Connections EPN1 to EPN2

For One or Two Fiber-Remoted Expansion Port Networks

1. Behind port carrier B of the multicarrier PPN (Figure 7-15, Figure 7-16, Figure 7-16, and Figure 7-17):
   - Install a 9823-type lightwave transceiver on the connector at slot 1B02.
   - Connect one end of the fiber-optic cable to the lightwave transceiver at slot 1B02.
   - Route the fiber-optic cable from the lightwave transceiver to the cabinet cable tray and out of the cabinet through the cable manager to the PDS cross-connect facility.
   - At the PDS cross-connect facility, connect the fiber-optic cable to the lightwave-interface unit provided.
   - Delicately attach the fiber-optic cable (with cable ties) to the wall of the cable tray at the built-in cable-tie positions.
2. Behind control cabinet A of EPN stack 2:
   - Install the same kind (either 9823-A or 9823-B) of lightwave transceiver on cable connector at slot 2A01.
   - Connect the fiber-optic cable to the lightwave transceiver at slot 2A01.
   - Route the fiber-optic cable from the lightwave transceiver to the cabinet cable tray and out of the cabinet through the cable manager to the PDS cross-connect facility.
   - At the PDS cross-connect facility, connect the fiber-optic cable to the lightwave-interface unit provided.
   - Delicately attach the fiber-optic cable (with cable ties) to the wall of the cable tray at the built-in cable-tie positions.

For Two Fiber-Remoted Expansion Port Networks

1. Behind port carrier C of the multicarrier PPN:
   - Install a 9823-type lightwave transceiver on the connector at slot 1C02.
   - Connect one end of the fiber-optic cable to the lightwave transceiver at slot 1C02.
   - Route the fiber-optic cable from the lightwave transceiver to the cabinet cable tray and out of the cabinet through the cable manager to the PDS cross-connect facility.
   - At the PDS cross-connect facility, connect the fiber-optic cable to the lightwave-interface unit provided.

- Delicately attach the fiber-optic cable (with cable ties) to the wall of the cable tray at the built-in cable-tie positions.

2. Behind control cabinet A of EPN stack 3:
   - Install the same kind (either 9823-A or 9823-B) of lightwave transceiver on cable connector at slot 3A01.
   - Connect the fiber-optic cable to the lightwave transceiver at slot 3A01.
   - Route the fiber-optic cable from the lightwave transceiver to the cabinet cable tray and out of the cabinet through the cable manager to the PDS cross-connect facility.
   - At the PDS cross-connect facility, connect the fiber-optic cable to the lightwave-interface unit provided.
   - Delicately attach the fiber-optic cable (with cable ties) to the wall of the cable tray at the built-in cable-tie positions.
3. Behind control carrier A of EPN stack 2:
   - Install a 9823-type lightwave transceiver on the connector at slot 2A02.
   - Connect one end of the fiber-optic cable to the lightwave transceiver at slot 2A02.
   - Route the fiber-optic cable from the lightwave transceiver to the cabinet cable tray and out of the cabinet through the cable manager to the PDS cross-connect facility.
   - At the PDS cross-connect facility, connect the fiber-optic cable to the lightwave-interface unit provided.
   - Delicately attach the fiber-optic cable (with cable ties) to the wall of the cable tray at the built-in cable-tie positions.
4. Behind control cabinet A of EPN stack 3:
   - Install the same kind (either 9823-A or 9823-B) of lightwave transceiver on cable connector at slot 3A02.
   - Connect the fiber-optic cable to the lightwave transceiver at slot 3A02.
   - Route the fiber-optic cable from the lightwave transceiver to the cabinet cable tray and out of the cabinet through the cable manager to the PDS cross-connect facility.
   - At the PDS cross-connect facility, connect the fiber-optic cable to the lightwave-interface unit provided.
   - Delicately attach the fiber-optic cable (with cable ties) to the wall of the cable tray at the built-in cable-tie positions.

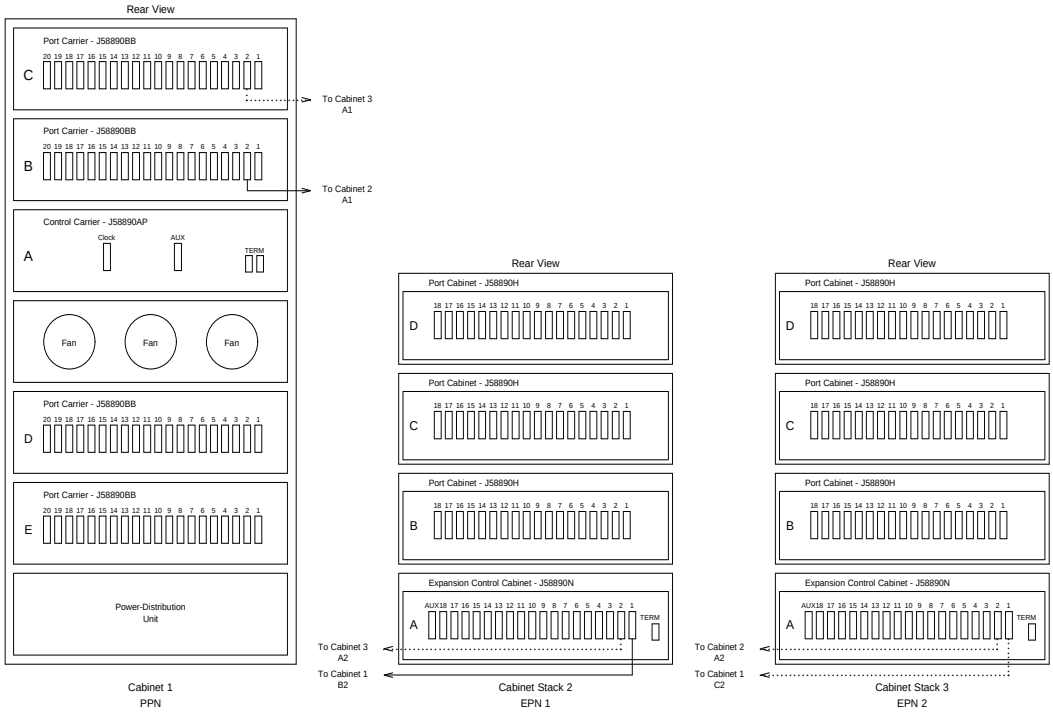

Figure 7-15. Standard-Reliability G3r V4 with Two or Three Port Networks

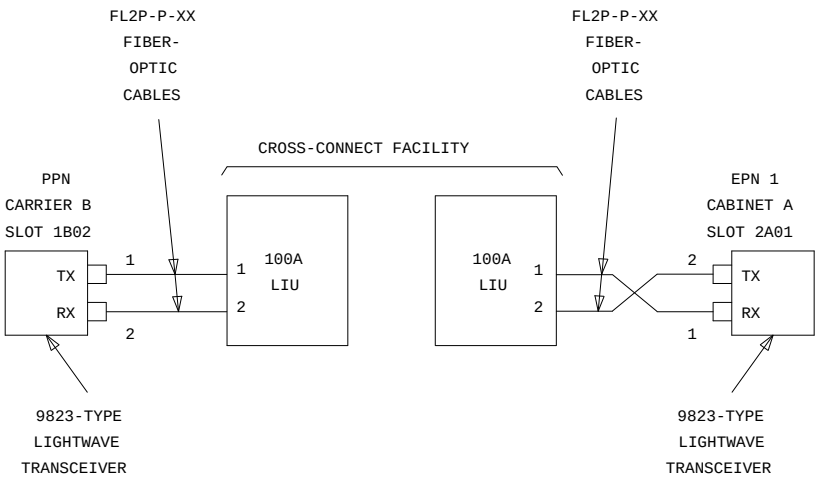

Figure 7-16. Fiber-Optic Connections PPN to EPN1

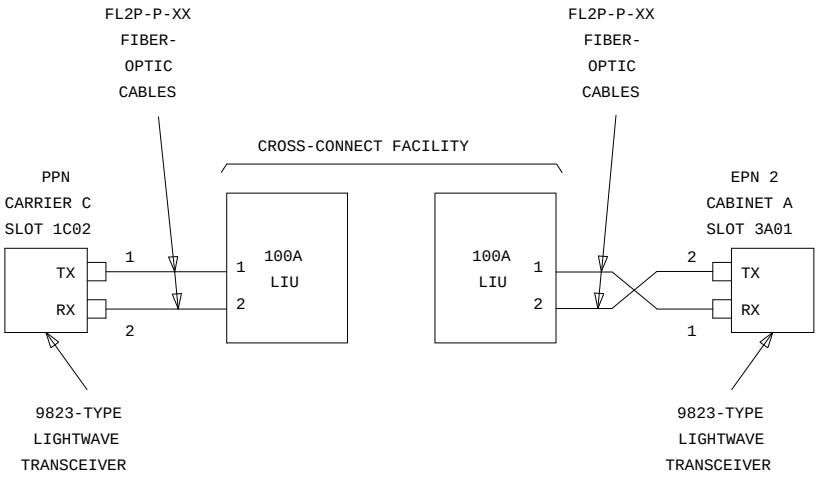

Figure 7-17. Fiber-Optic Connections PPN to EPN2

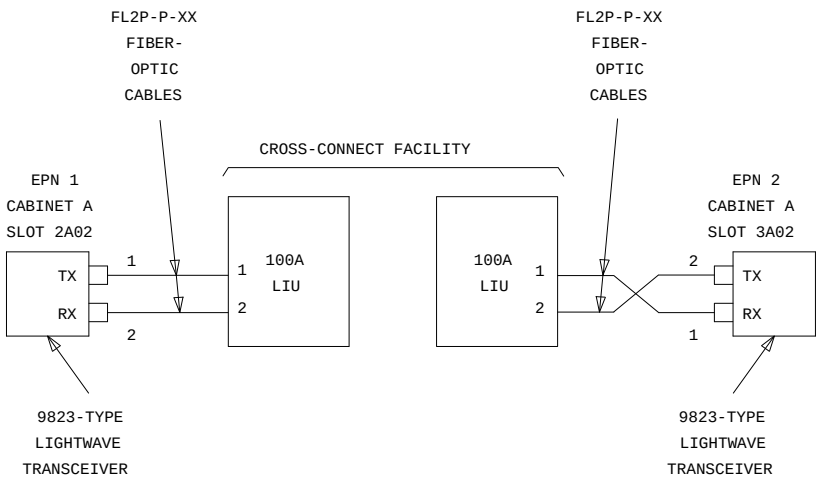

Figure 7-18. Fiber-Optic Connections EPN1 to EPN2

Interconnect Port Networks — High-Reliability G3r V4 System

See NOTES. Fiber-optic cabling terminated to 9823A lightwave transceivers can interconnect port networks (PNs) located up to 4,900 feet (about 9/10 mile) apart. Whereas, fiber-optic cabling terminated to 9823B lightwave transceivers can interconnect port networks located up to 25,000 feet (about 4.7 miles) apart. When available and whenever the desired distance between the port networks is less than 25,000 feet, fiber is the preferred medium for interconnecting port networks, providing significantly higher-bandwidth connectivity than DS1C remoting.

NOTE:
As always, these distance limitations are approximate measurements of the *actual* fiber right-of-way (not of the shortest linear distance) between the two endpoints.

NOTE:
It is important to label every cable that you install. For details, refer to the section, *Labels for Fiber-Optic Cables*, in Appendix E of the installation manual.

NOTE:
Throughout these procedures, remember to keep track of which fiber is attached to which connector on each lightwave transceiver. This section provides figures offering the suggested way of making these connections.

The connectors on the lightwave transceivers are labeled either “TX” (transmit) or “RX” (receive), while the fibers attached to each connector are numbered either ‘‘1’’ or “2.’’ A viable fiber connection is only made when both fibers in each cable (that is, ‘‘1’’ and ‘‘2’’) route from the “TX” connector of a port network to the “RX” connector of its adjacent port network. For an example, refer to Figure 7-20.)

NOTE:
For implementation details, refer to the ‘‘Fiber Link Administration’’ sections of *DEFINITY Communications System Generic 3 V4 Implementation*, 555-230-655.

Collocated Port Networks

For a high-reliability system with one collocated expansion port network, one fiber-optic cable (FL2P-P-XX) and two lightwave transceivers (9823-type) are required to directly connect the networks.

For a high-reliability system with two collocated expansion port networks, three fiber-optic cables (FL2P-P-XX) and six lightwave transceivers (9823-type) are required to directly connect the networks.

NOTE:
For the FL2P-P-XX fiber-optic cable, the -XX suffix represents the length of the cable in feet. Based on floor-plan considerations, the length of these cables may vary. However, 20-foot cables are normally adequate for a G3r V4 with two port networks.

See NOTE. For collocated cabinets, the fiber-optic cables should be routed directly from the PPN to each EPN cabinet. Since, for this upgrade, a ''DEFINITY style'' PPN cabinet is collocated with a single-carrier cabinet stack, the preferred routing is to run the cables *down* the cable tray and out the bottom of the PPN cabinet. The cables are then run to the EPN cabinet and up the outside of the rear panels to the desired carrier level.

If, for this upgrade, a ''DEFINITY style'' PPN cabinet is also collocated with another ''DEFINITY style'' multicarrier EPN cabinet, the preferred routing is to run the cables *up* the cable tray and out the top of the PPN cabinet. The cables are then run to the other cabinet, through the top of the cabinet, and down the cable tray to the desired carrier level.

NOTE:
Refer to Appendix E of *DEFINITY Communications System Generic 1 and Generic 3 Installation and Test*, 555-230-104, Issue 5, for additional guidelines about fiber routing.

Fiber-Remoted Port Networks

For a high-reliability system with one fiber-remoted expansion port network, two fiber-optic cables (FL2P-P-XX), two lightwave transceivers (9823-type), and two lightwave-interface units (provided by the PSC) are required.

For a high-reliability system with two fiber-remoted expansion port networks, six fiber-optic cables (FL2P-P-XX), six lightwave transceivers (9823-type), and six lightwave-interface units (provided by the PSC) are required.

DS1C-Remoted Port Networks

For a high-reliability system with one DS1C-remoted expansion port network, two DS1C circuit packs (TN574), two DS1C-to-EI cables (846448637 and/or 846448645), two H-600-348 cables, from one to four pairs of channel service units (CSUs), and from one to four pairs of wall-field cables (provided with the CSUs) are required.

For a high-reliability system with two DS1C-remoted expansion port networks, this arrangement requires:

- Six DS1C circuit packs (TN574)
- Six DS1C-to-EI cables (846448637 and/or 846448645)
- Six H-600-348 cables
- Three, six, nine, or twelve pairs of channel service units (CSUs)
- Three, six, nine, or twelve pairs of wall-field cables (provided with the CSUs)

For One or Two Collocated Expansion Port Networks

1. Behind port carrier C of the multicarrier PPN (see Figure 7-19, Figure 7-20, Figure 7-21, and Figure 7-22):
    - Install a 9823-type lightwave transceiver on the connector at slot 1C02.
    - Connect one end of the fiber-optic cable to the lightwave transceiver at slot 1C02.
    - Route the fiber-optic cable from the lightwave transceiver to the cabinet cable tray and out of the cabinet. Then route the cable into the cable tray of the EPN cabinet.
2. Behind control cabinet A EPN stack 2:
    - Install the same kind (either 9823-A or 9823-B) of lightwave transceiver on cable connector at slot 2A01.
    - Connect the other end of the fiber-optic cable coming from the PPN to the lightwave transceiver at slot 2A01.
    - Delicately attach the fiber-optic cable (with cable ties) to the wall of the cable tray at the built-in cable-tie positions.
    - At top of cabinet, coil up the surplus length of fiber-optic cable. Delicately attach the coil to the cable-tray wall with cable ties.

For Two Collocated Expansion Port Networks

1. Behind port carrier D of the multicarrier PPN:
   - Install a 9823-type lightwave transceiver on the connector at slot 1D02.
   - Connect one end of the fiber-optic cable to the lightwave transceiver at slot 1D02.
   - Route the fiber-optic cable from the lightwave transceiver to the cabinet cable tray and out of the cabinet. Then route the cable into the cable tray of the EPN cabinet.
2. Behind control cabinet A of EPN stack 3:
   - Install the same kind (either 9823-A or 9823-B) of lightwave transceiver on cable connector at slot 3A01.
   - Connect the other end of the fiber-optic cable coming from the PPN to the lightwave transceiver at slot 3A01.
   - Delicately attach the fiber-optic cable (with cable ties) to the wall of the cable tray at the built-in cable-tie positions.
   - At top of cabinet, coil up the surplus length of fiber-optic cable. Delicately attach the coil to the cable-tray wall with cable ties.
3. Behind control cabinet A of EPN stack 2:
   - Install a 9823-type lightwave transceiver on the connector at slot 2A02.
   - Connect one end of the fiber-optic cable to the lightwave transceiver at slot 2A02.
   - Route the fiber-optic cable from the lightwave transceiver to the cabinet cable tray and out of the cabinet. Then route the cable into the cable tray of the EPN cabinet.
4. Behind control cabinet A of EPN stack 3:
   - Install the same kind (either 9823-A or 9823-B) of lightwave transceiver on cable connector at slot 3A02.
   - Connect the other end of the fiber-optic cable coming from the PPN to the lightwave transceiver at slot 3A02.
   - Delicately attach the fiber-optic cable (with cable ties) to the wall of the cable tray at the built-in cable-tie positions.
   - At top of cabinet, coil up the surplus length of fiber-optic cable. Delicately attach the coil to the cable-tray wall with cable ties.

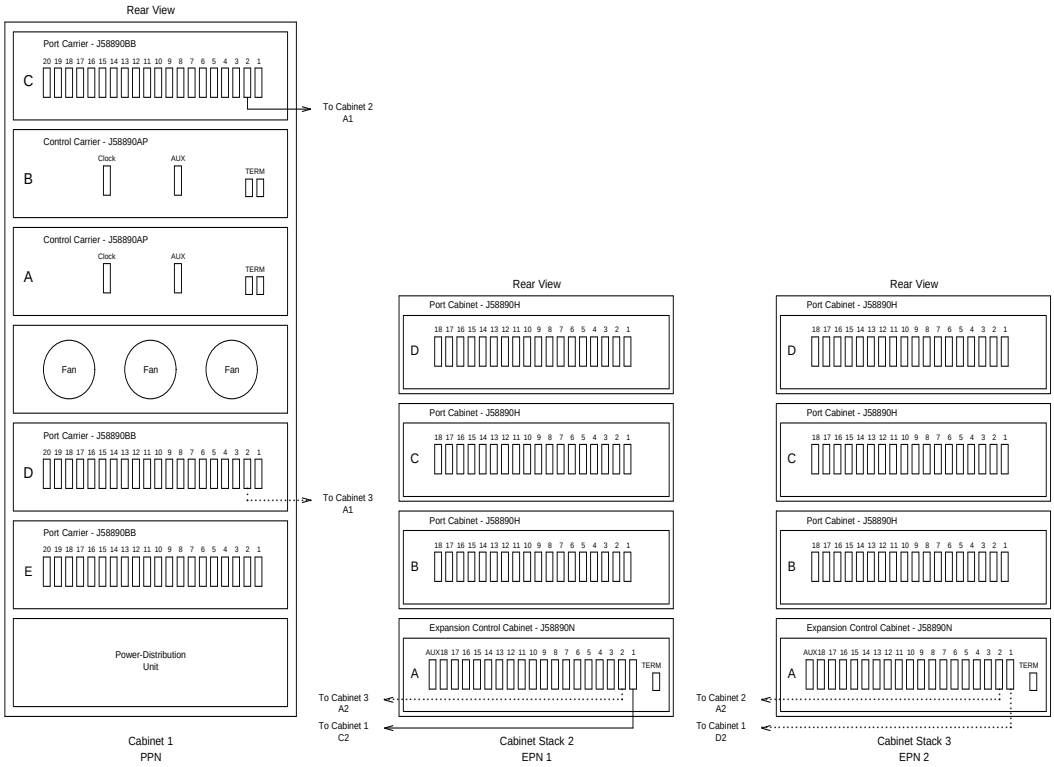

Figure 7-19. High-Reliability G3r V4 with Two or Three Port Networks

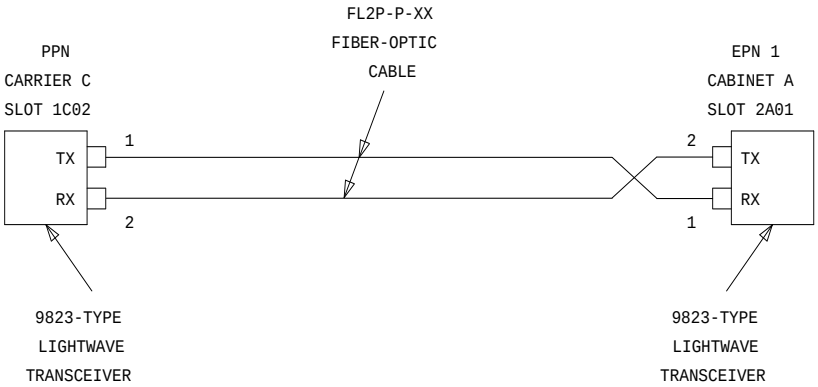

Figure 7-20. Fiber-Optic Connections PPN to EPN1

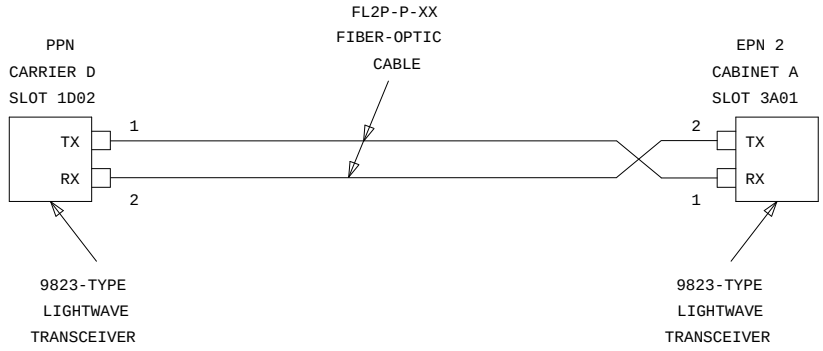

Figure 7-21. Fiber-Optic Connections PPN to EPN2

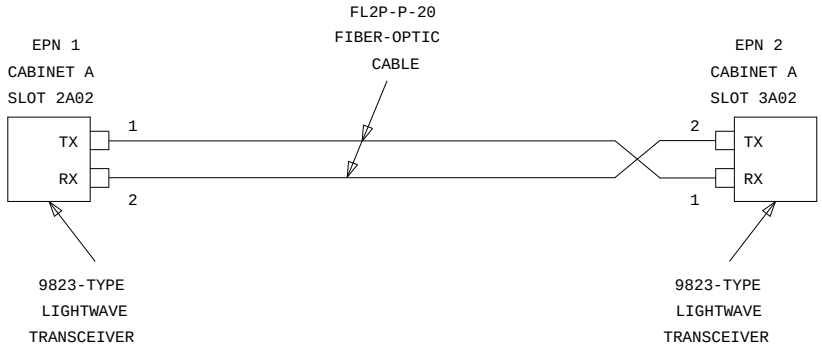

Figure 7-22. Fiber-Optic Connections EPN1 to EPN2

For One or Two Fiber-Remoted Expansion Port Networks

1. Behind port carrier C of the multicarrier PPN (Figure 7-23, Figure 7-24, Figure 7-25, and Figure 7-26):
   - Install a 9823-type lightwave transceiver on the connector at slot 1C02.
   - Connect one end of the fiber-optic cable to the lightwave transceiver at slot 1C02.
   - Route the fiber-optic cable from the lightwave transceiver to the cabinet cable tray and out of the cabinet through the cable manager to the PDS cross-connect facility.
   - At the PDS cross-connect facility, connect the fiber-optic cable to the lightwave-interface unit provided.
   - Delicately attach the fiber-optic cable (with cable ties) to the wall of the cable tray at the built-in cable-tie positions.
2. Behind control cabinet A of EPN stack 2:
   - Install the same kind (either 9823-A or 9823-B) of lightwave transceiver on cable connector at slot 2A01.
   - Connect the fiber-optic cable to the lightwave transceiver at slot 2A01.
   - Route the fiber-optic cable from the lightwave transceiver to the cabinet cable tray and out of the cabinet through the cable manager to the PDS cross-connect facility.
   - At the PDS cross-connect facility, connect the fiber-optic cable to the lightwave-interface unit provided.
   - Delicately attach the fiber-optic cable (with cable ties) to the wall of the cable tray at the built-in cable-tie positions.

For Two Fiber-Remoted Expansion Port Networks

1. Behind port carrier D of the multicarrier PPN:
   - Install a 9823-type lightwave transceiver on the connector at slot 1D02.
   - Connect one end of the fiber-optic cable to the lightwave transceiver at slot 1D02.
   - Route the fiber-optic cable from the lightwave transceiver to the cabinet cable tray and out of the cabinet through the cable manager to the PDS cross-connect facility.
   - At the PDS cross-connect facility, connect the fiber-optic cable to the lightwave-interface unit provided.

- Delicately attach the fiber-optic cable (with cable ties) to the wall of the cable tray at the built-in cable-tie positions.

2. Behind control cabinet A of EPN stack 3:
   - Install the same kind (either 9823-A or 9823-B) of lightwave transceiver on cable connector at slot 3A01.
   - Connect the fiber-optic cable to the lightwave transceiver at slot 3A01.
   - Route the fiber-optic cable from the lightwave transceiver to the cabinet cable tray and out of the cabinet through the cable manager to the PDS cross-connect facility.
   - At the PDS cross-connect facility, connect the fiber-optic cable to the lightwave-interface unit provided.
   - Delicately attach the fiber-optic cable (with cable ties) to the wall of the cable tray at the built-in cable-tie positions.
3. Behind port cabinet A of the EPN stack 2:
   - Install a 9823-type lightwave transceiver on the connector at slot 2A02.
   - Connect one end of the fiber-optic cable to the lightwave transceiver at slot 2A02.
   - Route the fiber-optic cable from the lightwave transceiver to the cabinet cable tray and out of the cabinet through the cable manager to the PDS cross-connect facility.
   - At the PDS cross-connect facility, connect the fiber-optic cable to the lightwave-interface unit provided.
   - Delicately attach the fiber-optic cable (with cable ties) to the wall of the cable tray at the built-in cable-tie positions.
4. Behind control cabinet A of EPN stack 3:
   - Install the same kind (either 9823-A or 9823-B) of lightwave transceiver on cable connector at slot 3A02.
   - Connect the fiber-optic cable to the lightwave transceiver at slot 3A02.
   - Route the fiber-optic cable from the lightwave transceiver to the cabinet cable tray and out of the cabinet through the cable manager to the PDS cross-connect facility.
   - At the PDS cross-connect facility, connect the fiber-optic cable to the lightwave-interface unit provided.
   - Delicately attach the fiber-optic cable (with cable ties) to the wall of the cable tray at the built-in cable-tie positions.

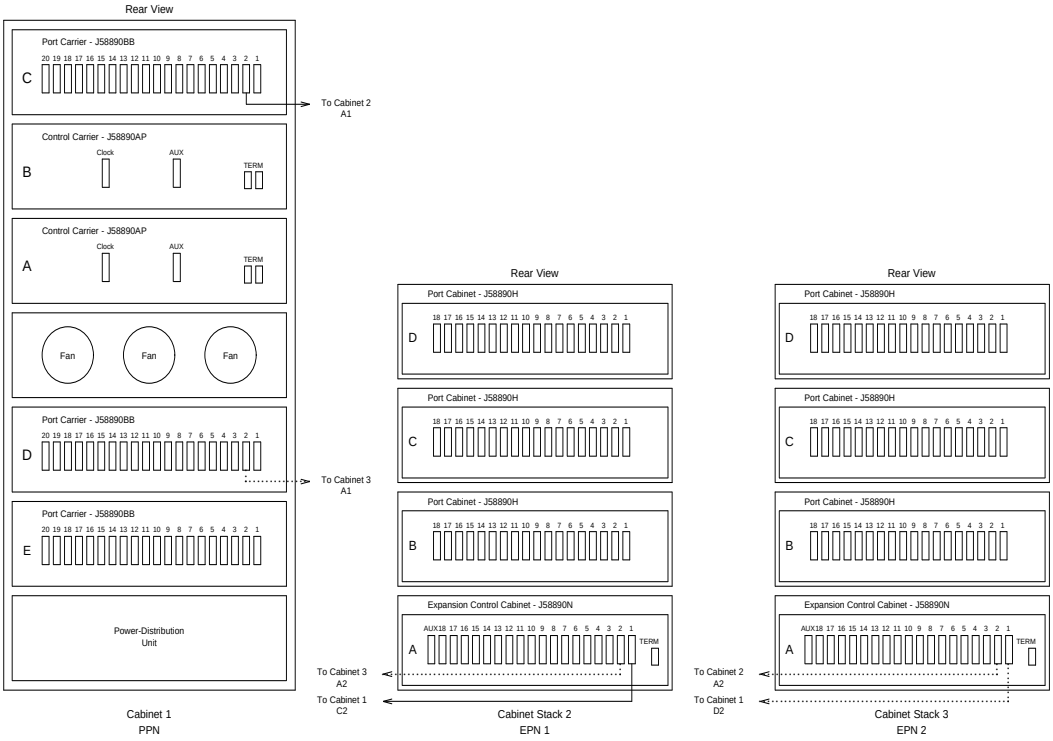

Figure 7-23. High-Reliability G3r V4 with Two or Three Port Networks

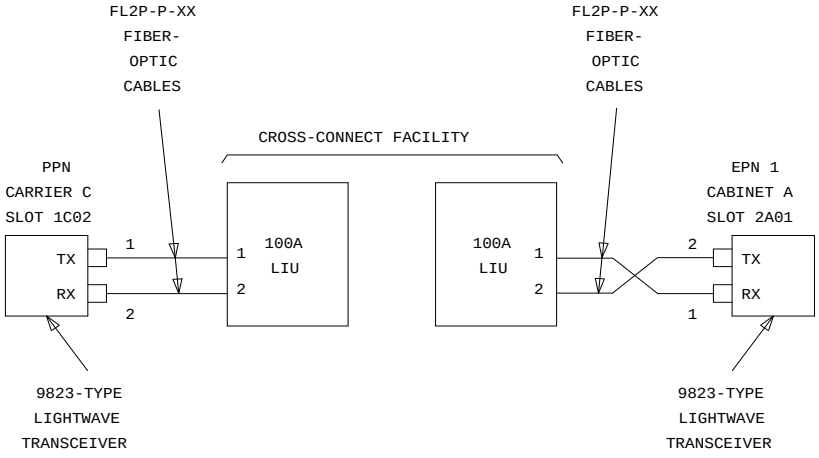

Figure 7-24. Fiber-Optic Connections PPN to EPN1

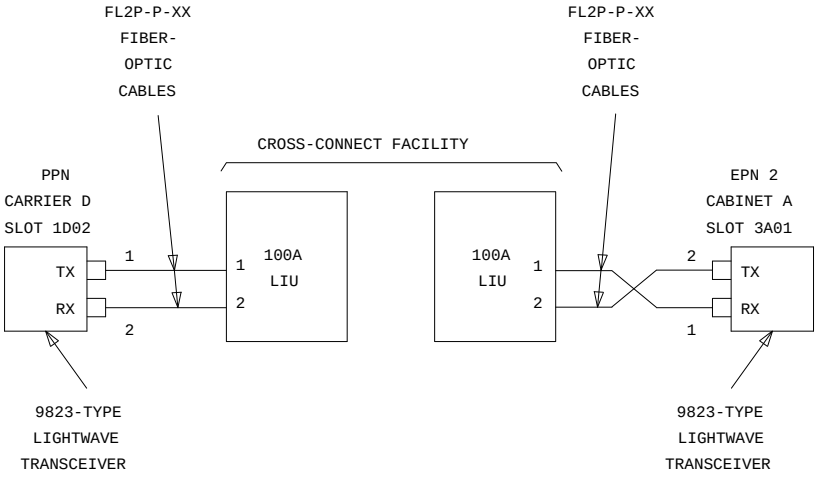

Figure 7-25. Fiber-Optic Connections PPN to EPN2

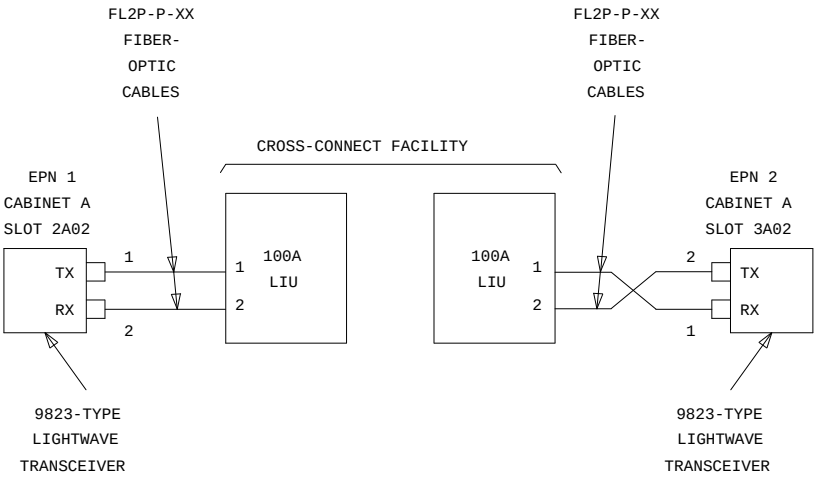

Figure 7-26. Fiber-Optic Connections EPN1 to EPN2

Interconnect Port Networks — Critical-Reliability G3r V4 System

See NOTES. Fiber-optic cabling terminated to 9823A lightwave transceivers can interconnect port networks (PNs) located up to 4,900 feet (about 9/10 mile) apart. Whereas, fiber-optic cabling terminated to 9823B lightwave transceivers can interconnect port networks located up to 25,000 feet (about 4.7 miles) apart. When available and whenever the desired distance between the port networks is less than 25,000 feet, fiber is the preferred medium for interconnecting port networks, providing significantly higher-bandwidth connectivity than DS1C remoting.

NOTE:
As always, these distance limitations are approximate measurements of the *actual* fiber right-of-way (not of the shortest linear distance) between the two endpoints.

NOTE:
It is important to label every cable that you install. For details, refer to the section, *Labels for Fiber-Optic Cables*, in Appendix E of the installation manual.

NOTE:
Throughout these procedures, remember to keep track of which fiber is attached to which connector on each lightwave transceiver. This section provides figures offering the suggested way of making these connections.

The connectors on the lightwave transceivers are labeled either “TX” (transmit) or “RX” (receive), while the fibers attached to each connector are numbered either ‘‘1’’ or ‘‘2.’’ A viable fiber connection is only made when both fibers in each cable (that is, ‘‘1’’ and ‘‘2’’) route from the “TX” connector of a port network to the “RX” connector of its adjacent port network. For an example, refer to Figure 7-28.)

NOTE:
For implementation details, refer to the ‘‘Fiber Link Administration’’ sections of *DEFINITY Communications System Generic 3 V4 Implementation*, 555-230-655.

Collocated Port Networks

For a critical-reliability system with one collocated expansion port network, two fiber-optic cables (FL2P-P-XX) and four lightwave transceivers (9823-type) are required to directly connect the networks.

For a critical-reliability system with two collocated expansion port networks, six fiber-optic cables (FL2P-P-XX) and twelve lightwave transceivers (9823-type) are required to directly connect the networks.

NOTE:
For the FL2P-P-XX fiber-optic cable, the -XX suffix represents the length of the cable in feet. Based on floor-plan considerations, the length of these cables may vary. However, 20-foot cables are normally adequate for a G3r V4 with two port networks.

See NOTE. For collocated cabinets, the fiber-optic cables should be routed directly from the PPN to each EPN cabinet. Since, for this upgrade, a ''DEFINITY style'' PPN cabinet is collocated with a single-carrier cabinet stack, the preferred routing is to run the cables *down* the cable tray and out the bottom of the PPN cabinet. The cables are then run to the EPN cabinet and up the outside of the rear panels to the desired carrier level.

If, for this upgrade, a ''DEFINITY style'' PPN cabinet is also collocated with another ''DEFINITY style'' multicarrier EPN cabinet, the preferred routing is to run the cables *up* the cable tray and out the top of the PPN cabinet. The cables are then run to the other cabinet, through the top of the cabinet, and down the cable tray to the desired carrier level.

NOTE:
Refer to Appendix E of *DEFINITY Communications System Generic 1 and Generic 3 Installation and Test*, 555-230-104, Issue 5, for additional guidelines about fiber routing.

Fiber-Remoted Port Networks

For a critical-reliability system with one fiber-remoted expansion port network, four fiber-optic cables (FL2P-P-XX), four lightwave transceivers (9823-type), and four lightwave-interface units (provided by the PSC) are required.

For a critical-reliability system with two fiber-remoted expansion port networks, twelve fiber-optic cables (FL2P-P-XX), twelve lightwave transceivers (9823-type), and twelve lightwave-interface units (provided by the PSC) are required.

DS1C-Remoted Port Networks

For a critical-reliability system with one DS1C-remoted expansion port network, this arrangement requires:

- Four DS1C circuit packs (TN574)
- Four DS1C-to-EI cables (846448637 and/or 846448645)
- Four H-600-348 cables
- Two, four, six, or eight pairs of channel service units (CSUs)
- Two, four, six, or eight pairs of wall-field cables (provided with the CSUs)

For a critical-reliability system with two DS1C-remoted expansion port networks, this arrangement requires:

- 12 DS1C circuit packs (TN574)
- 12 DS1C-to-EI cables (846448637 and/or 846448645)
- 12 H-600-348 cables
- 6, 12, 18, or 24 pairs of channel service units (CSUs)
- 6, 12, 18, or 24 pairs of wall-field cables (provided with the CSUs)

For One or Two Collocated Expansion Port Networks

1. Behind port carrier C of the multicarrier PPN (see Figure 7-27, Figure 7-28, Figure 7-29, and Figure 7-30):
    - Install a 9823-type lightwave transceiver on the connector at slot 1C02.
    - Connect one end of the fiber-optic cable to the lightwave transceiver at slot 1C02.
    - Route the fiber-optic cable from the lightwave transceiver to the cabinet cable tray and out of the cabinet. Then route the cable into the cable tray of the EPN cabinet.
2. Behind port cabinet B of EPN stack 2:
    - Install the same kind (either 9823-A or 9823-B) of lightwave transceiver on cable connector at slot 2B02.
    - Connect the other end of the fiber-optic cable coming from the PPN to the lightwave transceiver at slot 2B02.
    - Delicately attach the fiber-optic cable (with cable ties) to the wall of the cable tray at the built-in cable-tie positions.
    - At top of cabinet, coil up the surplus length of fiber-optic cable. Delicately attach the coil to the cable-tray wall with cable ties.

3. Behind port carrier D of the multicarrier PPN:
   - Install a 9823-type lightwave transceiver on the connector at slot 1D02.
   - Connect one end of the fiber-optic cable to the lightwave transceiver at slot 1D02.
   - Route the fiber-optic cable from the lightwave transceiver to the cabinet cable tray and out of the cabinet. Then route the cable into the cable tray of the EPN cabinet.
4. Behind control cabinet A of EPN stack 2:
   - Install the same kind (either 9823-A or 9823-B) of lightwave transceiver on cable connector at slot 2A01.
   - Connect the other end of the fiber-optic cable coming from the PPN to the lightwave transceiver at slot 2A01.
   - Delicately attach the fiber-optic cable (with cable ties) to the wall of the cable tray at the built-in cable-tie positions.
   - At top of cabinet, coil up the surplus length of fiber-optic cable. Delicately attach the coil to the cable-tray wall with cable ties.

For Two Collocated Expansion Port Networks

1. Behind port carrier C of the multicarrier PPN:
   - Install a 9823-type lightwave transceiver on the connector at slot 1C03.
   - Connect one end of the fiber-optic cable to the lightwave transceiver at slot 1C03.
   - Route the fiber-optic cable from the lightwave transceiver to the cabinet cable tray and out of the cabinet. Then route the cable into the cable tray of the EPN cabinet.
2. Behind port cabinet B of EPN stack 3:
   - Install the same kind (either 9823-A or 9823-B) of lightwave transceiver on cable connector at slot 3B02.
   - Connect the other end of the fiber-optic cable coming from the PPN to the lightwave transceiver at slot 3B02.
   - Delicately attach the fiber-optic cable (with cable ties) to the wall of the cable tray at the built-in cable-tie positions.
   - At top of cabinet, coil up the surplus length of fiber-optic cable. Delicately attach the coil to the cable-tray wall with cable ties.

3. Behind port carrier D of the multicarrier PPN:
   - Install a 9823-type lightwave transceiver on the connector at slot 1D03.
   - Connect one end of the fiber-optic cable to the lightwave transceiver at slot 1D03.
   - Route the fiber-optic cable from the lightwave transceiver to the cabinet cable tray and out of the cabinet. Then route the cable into the cable tray of the EPN cabinet.
4. Behind control cabinet A of EPN stack 3:
   - Install the same kind (either 9823-A or 9823-B) of lightwave transceiver on cable connector at slot 3A01.
   - Connect the other end of the fiber-optic cable coming from the PPN to the lightwave transceiver at slot 3A01.
   - Delicately attach the fiber-optic cable (with cable ties) to the wall of the cable tray at the built-in cable-tie positions.
   - At top of cabinet, coil up the surplus length of fiber-optic cable. Delicately attach the coil to the cable-tray wall with cable ties.
5. Behind control cabinet A of EPN stack 2:
   - Install a 9823-type lightwave transceiver on the connector at slot 2A02.
   - Connect one end of the fiber-optic cable to the lightwave transceiver at slot 2A02.
   - Route the fiber-optic cable from the lightwave transceiver to the cabinet cable tray and out of the cabinet. Then route the cable into the cable tray of the EPN cabinet.
6. Behind control cabinet A of EPN stack 3:
   - Install the same kind (either 9823-A or 9823-B) of lightwave transceiver on cable connector at slot 3A02.
   - Connect the other end of the fiber-optic cable coming from the PPN to the lightwave transceiver at slot 3A02.
   - Delicately attach the fiber-optic cable (with cable ties) to the wall of the cable tray at the built-in cable-tie positions.
   - At top of cabinet, coil up the surplus length of fiber-optic cable. Delicately attach the coil to the cable-tray wall with cable ties.

7. Behind port cabinet B of EPN stack 2:
   - Install a 9823-type lightwave transceiver on the connector at slot 2B03.
   - Connect one end of the fiber-optic cable to the lightwave transceiver at slot 2B03.
   - Route the fiber-optic cable from the lightwave transceiver to the cabinet cable tray and out of the cabinet. Then route the cable into the cable tray of the EPN cabinet.
8. Behind port cabinet B of EPN stack 3:
   - Install the same kind (either 9823-A or 9823-B) of lightwave transceiver on cable connector at slot 3B03.
   - Connect the other end of the fiber-optic cable coming from the PPN to the lightwave transceiver at slot 3B03.
   - Delicately attach the fiber-optic cable (with cable ties) to the wall of the cable tray at the built-in cable-tie positions.
   - At top of cabinet, coil up the surplus length of fiber-optic cable. Delicately attach the coil to the cable-tray wall with cable ties.

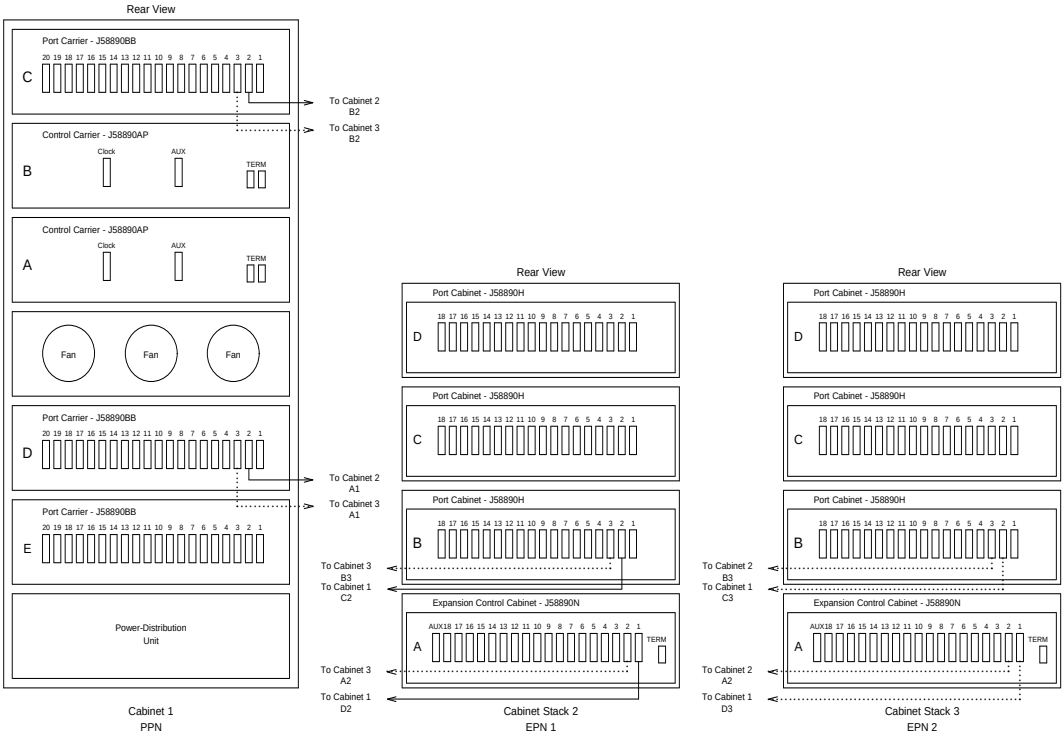

Figure 7-27. Critical-Reliability G3r V4 with Two or Three Port Networks

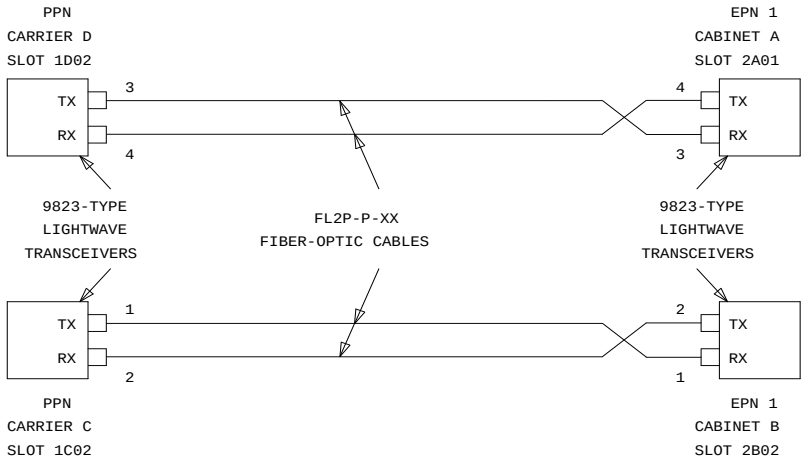

Figure 7-28. Fiber-Optic Connections PPN to EPN1

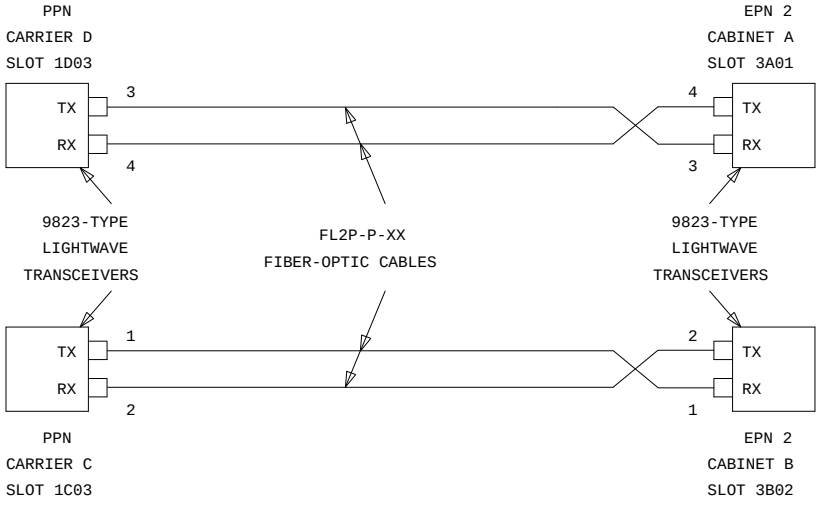

Figure 7-29. Fiber-Optic Connections PPN to EPN2

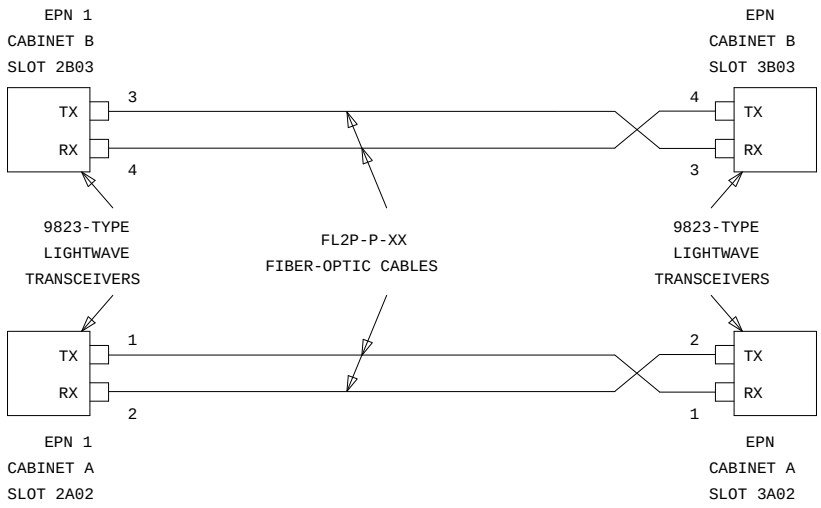

Figure 7-30. Fiber-Optic Connections EPN1 to EPN2

For One or Two Fiber-Remoted Expansion Port Networks

1. Behind port carrier C of the multicarrier PPN (Figure 7-31, Figure 7-32, Figure 7-33, and Figure 7-34):
   - Install a 9823-type lightwave transceiver on the connector at slot 1C02.
   - Connect one end of the fiber-optic cable to the lightwave transceiver at slot 1C02.
   - Route the fiber-optic cable from the lightwave transceiver to the cabinet cable tray and out of the cabinet through the cable manager to the PDS cross-connect facility.
   - At the PDS cross-connect facility, connect the fiber-optic cable to the lightwave-interface unit provided.
   - Delicately attach the fiber-optic cable (with cable ties) to the wall of the cable tray at the built-in cable-tie positions.
2. Behind port cabinet B of EPN stack 2:
   - Install the same kind (either 9823-A or 9823-B) of lightwave transceiver on cable connector at slot 2B02.
   - Connect the fiber-optic cable to the lightwave transceiver at slot 2B02.
   - Route the fiber-optic cable from the lightwave transceiver to the cabinet cable tray and out of the cabinet through the cable manager to the PDS cross-connect facility.
   - At the PDS cross-connect facility, connect the fiber-optic cable to the lightwave-interface unit provided.
   - Delicately attach the fiber-optic cable (with cable ties) to the wall of the cable tray at the built-in cable-tie positions.
3. Behind port carrier D of the multicarrier PPN:
   - Install a 9823-type lightwave transceiver on the connector at slot 1D02.
   - Connect one end of the fiber-optic cable to the lightwave transceiver at slot 1D02.
   - Route the fiber-optic cable from the lightwave transceiver to the cabinet cable tray and out of the cabinet through the cable manager to the PDS cross-connect facility.
   - At the PDS cross-connect facility, connect the fiber-optic cable to the lightwave-interface unit provided.
   - Delicately attach the fiber-optic cable (with cable ties) to the wall of the cable tray at the built-in cable-tie positions.

4. Behind control cabinet A of EPN stack 2:
   - Install the same kind (either 9823-A or 9823-B) of lightwave transceiver on cable connector at slot 2A01.
   - Connect the fiber-optic cable to the lightwave transceiver at slot 2A01.
   - Route the fiber-optic cable from the lightwave transceiver to the cabinet cable tray and out of the cabinet through the cable manager to the PDS cross-connect facility.
   - At the PDS cross-connect facility, connect the fiber-optic cable to the lightwave-interface unit provided.
   - Delicately attach the fiber-optic cable (with cable ties) to the wall of the cable tray at the built-in cable-tie positions.

For Two Fiber-Remoted Expansion Port Networks

1. Behind port carrier C of the multicarrier PPN:
   - Install a 9823-type lightwave transceiver on the connector at slot 1C03.
   - Connect one end of the fiber-optic cable to the lightwave transceiver at slot 1C03.
   - Route the fiber-optic cable from the lightwave transceiver to the cabinet cable tray and out of the cabinet through the cable manager to the PDS cross-connect facility.
   - At the PDS cross-connect facility, connect the fiber-optic cable to the lightwave-interface unit provided.
   - Delicately attach the fiber-optic cable (with cable ties) to the wall of the cable tray at the built-in cable-tie positions.
2. Behind port cabinet B of EPN stack 3:
   - Install the same kind (either 9823-A or 9823-B) of lightwave transceiver on cable connector at slot 3B02.
   - Connect the fiber-optic cable to the lightwave transceiver at slot 3B02.
   - Route the fiber-optic cable from the lightwave transceiver to the cabinet cable tray and out of the cabinet through the cable manager to the PDS cross-connect facility.
   - At the PDS cross-connect facility, connect the fiber-optic cable to the lightwave-interface unit provided.
   - Delicately attach the fiber-optic cable (with cable ties) to the wall of the cable tray at the built-in cable-tie positions.

3. Behind port carrier D of the multicarrier PPN:
   - Install a 9823-type lightwave transceiver on the connector at slot 1D03.
   - Connect one end of the fiber-optic cable to the lightwave transceiver at slot 1D03.
   - Route the fiber-optic cable from the lightwave transceiver to the cabinet cable tray and out of the cabinet through the cable manager to the PDS cross-connect facility.
   - At the PDS cross-connect facility, connect the fiber-optic cable to the lightwave-interface unit provided.
   - Delicately attach the fiber-optic cable (with cable ties) to the wall of the cable tray at the built-in cable-tie positions.
4. Behind control cabinet A of EPN stack 3:
   - Install the same kind (either 9823-A or 9823-B) of lightwave transceiver on cable connector at slot 3A01.
   - Connect the fiber-optic cable to the lightwave transceiver at slot 3A01.
   - Route the fiber-optic cable from the lightwave transceiver to the cabinet cable tray and out of the cabinet through the cable manager to the PDS cross-connect facility.
   - At the PDS cross-connect facility, connect the fiber-optic cable to the lightwave-interface unit provided.
   - Delicately attach the fiber-optic cable (with cable ties) to the wall of the cable tray at the built-in cable-tie positions.
5. Behind control cabinet A of EPN stack 2:
   - Install a 9823-type lightwave transceiver on the connector at slot 2A02.
   - Connect one end of the fiber-optic cable to the lightwave transceiver at slot 2A02.
   - Route the fiber-optic cable from the lightwave transceiver to the cabinet cable tray and out of the cabinet through the cable manager to the PDS cross-connect facility.
   - At the PDS cross-connect facility, connect the fiber-optic cable to the lightwave-interface unit provided.
   - Delicately attach the fiber-optic cable (with cable ties) to the wall of the cable tray at the built-in cable-tie positions.

6. Behind control cabinet A of EPN stack 3:
   - Install the same kind (either 9823-A or 9823-B) of lightwave transceiver on cable connector at slot 3A02.
   - Connect the fiber-optic cable to the lightwave transceiver at slot 3A02.
   - Route the fiber-optic cable from the lightwave transceiver to the cabinet cable tray and out of the cabinet through the cable manager to the PDS cross-connect facility.
   - At the PDS cross-connect facility, connect the fiber-optic cable to the lightwave-interface unit provided.
   - Delicately attach the fiber-optic cable (with cable ties) to the wall of the cable tray at the built-in cable-tie positions.
7. Behind port cabinet B of EPN stack 2:
   - Install a 9823-type lightwave transceiver on the connector at slot 2B03.
   - Connect one end of the fiber-optic cable to the lightwave transceiver at slot 2B03.
   - Route the fiber-optic cable from the lightwave transceiver to the cabinet cable tray and out of the cabinet through the cable manager to the PDS cross-connect facility.
   - At the PDS cross-connect facility, connect the fiber-optic cable to the lightwave-interface unit provided.
   - Delicately attach the fiber-optic cable (with cable ties) to the wall of the cable tray at the built-in cable-tie positions.
8. Behind port cabinet B of EPN stack 3:
   - Install the same kind (either 9823-A or 9823-B) of lightwave transceiver on cable connector at slot 3B03.
   - Connect the fiber-optic cable to the lightwave transceiver at slot 3B03.
   - Route the fiber-optic cable from the lightwave transceiver to the cabinet cable tray and out of the cabinet through the cable manager to the PDS cross-connect facility.
   - At the PDS cross-connect facility, connect the fiber-optic cable to the lightwave-interface unit provided.
   - Delicately attach the fiber-optic cable (with cable ties) to the wall of the cable tray at the built-in cable-tie positions.

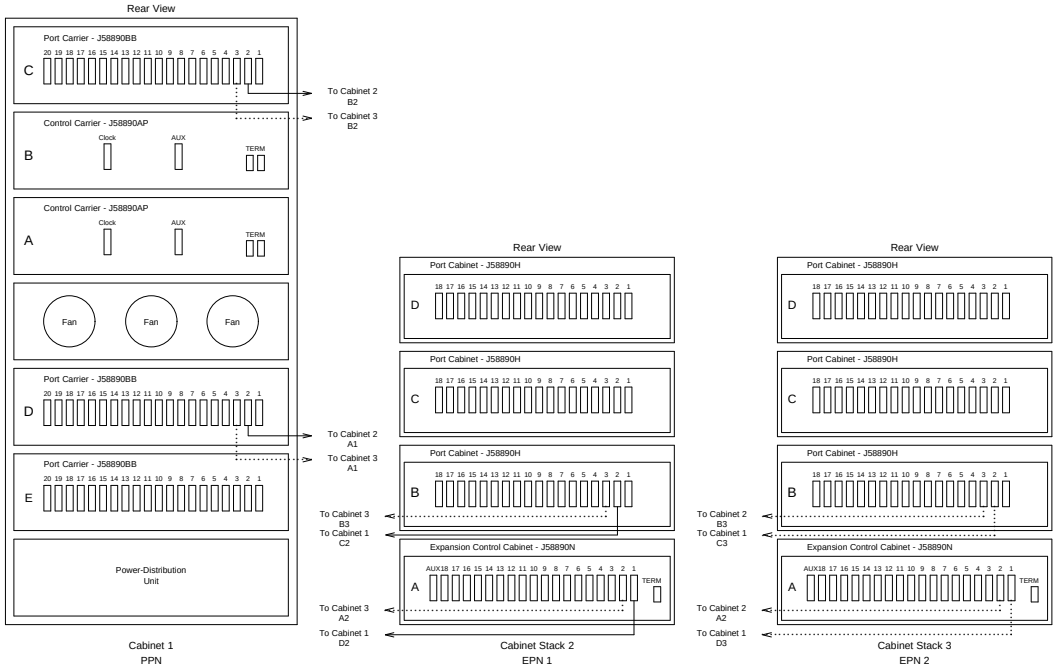

Figure 7-31. Critical-Reliability G3r V4 with Two or Three Port Networks

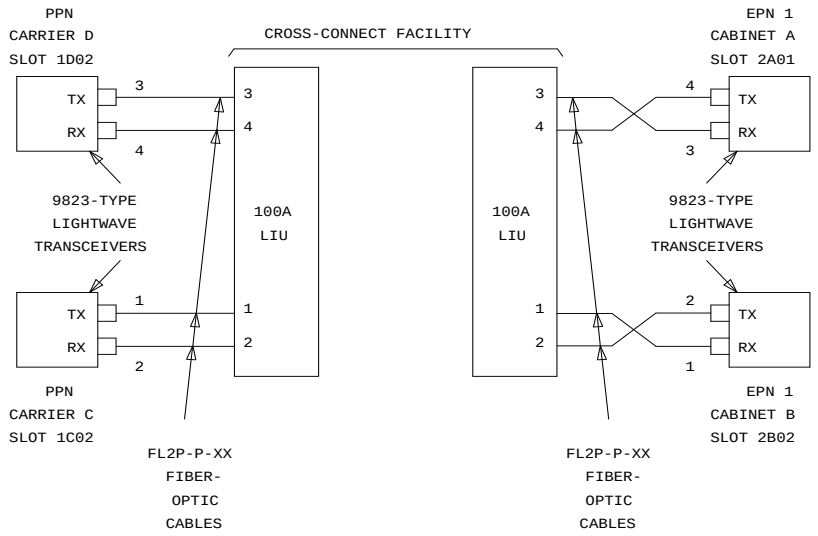

Figure 7-32. Fiber-Optic Connections PPN to EPN1

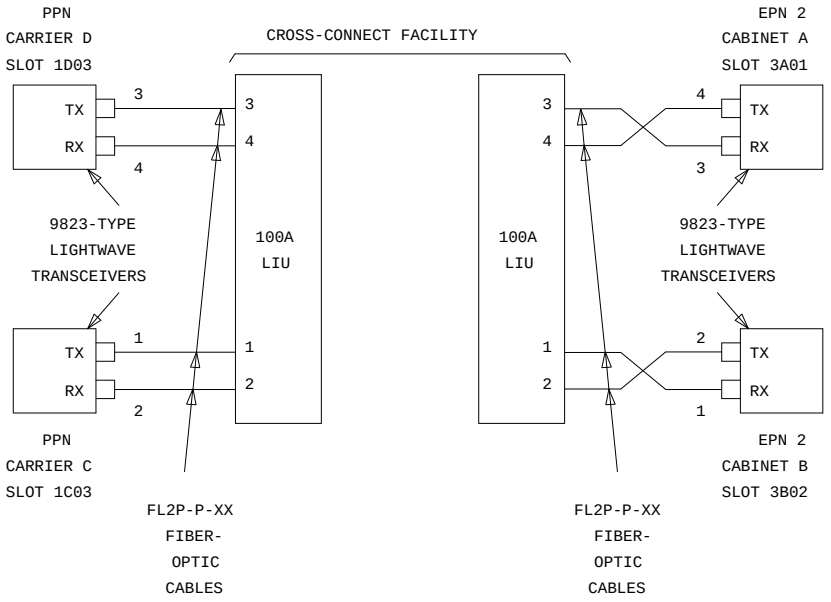

Figure 7-33. Fiber-Optic Connections PPN to EPN2

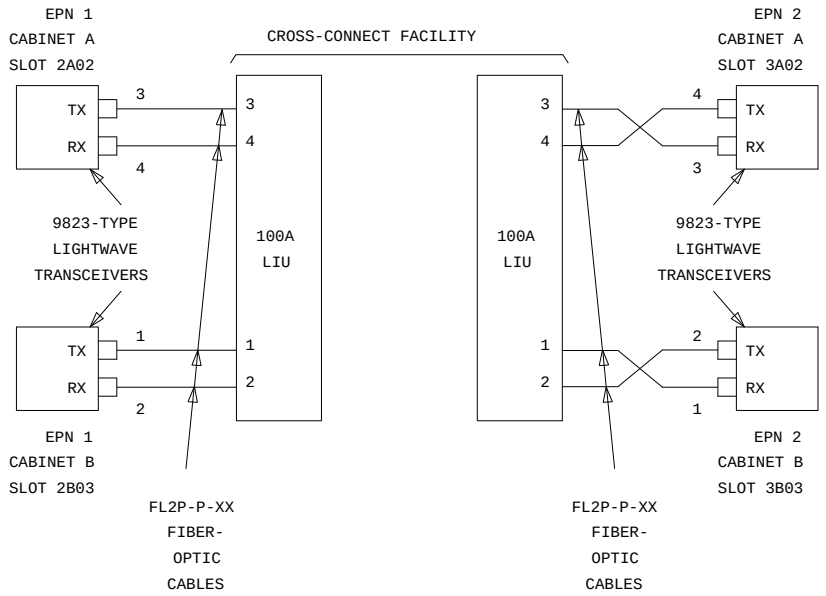

Figure 7-34. Fiber-Optic Connections EPN1 to EPN2

Switch-Connected Port Networks

For One to Fifteen Standard-Reliability EPNs.

1. Behind the PPN cabinet (see Figure 7-35):
   - Install a 9823-type lightwave transceiver on cable connector at slot 1E02.
   - Install a 9823-type lightwave transceiver on cable connector at slot 1B02.
   - Connect one end of the metallic intercarrier cable to the lightwave transceiver at slot 1E02.
   - Route the intercarrier cable from the lightwave transceiver to the cabinet's cable tray and upward to carrier "B."
   - Connect the other end of the intercarrier cable to the lightwave transceiver at slot 1B02.
   - Attach the intercarrier cable (with cable ties) to the wall of the cable tray at the built-in cable-tie positions.
2. Behind switch node carrier E of PPN cabinet 1 (see Figure 7-35):
   - For each EPN, install one 9823-type lightwave transceiver on a cable connector with the following order of slots: 1E20, 1E03, 1E19, 1E04, 1E18, 1E05, etc.

- Connect one end of each fiber-optic cable to each lightwave transceiver, just installed.
- Delicately attach the fiber-optic cables (with cable ties) to the wall of the cable tray at the built-in cable-tie positions.

3. Behind control cabinet A of each single-carrier EPN:
   - Install the same kind (either 9823-A or 9823-B) of lightwave transceiver on cable connector at slot A01.
   - Connect the other end of the fiber-optic cable to the lightwave transceiver, just installed, at slot A01.
   - Delicately attach the fiber-optic cable (with cable ties) to the wall of the cable tray at the built-in cable-tie positions.
   - Coil up the surplus length of fiber-optic cable, and place the coil either in the cable manager or on the bottom shelf (holding the power supply) of the PPN cabinet.

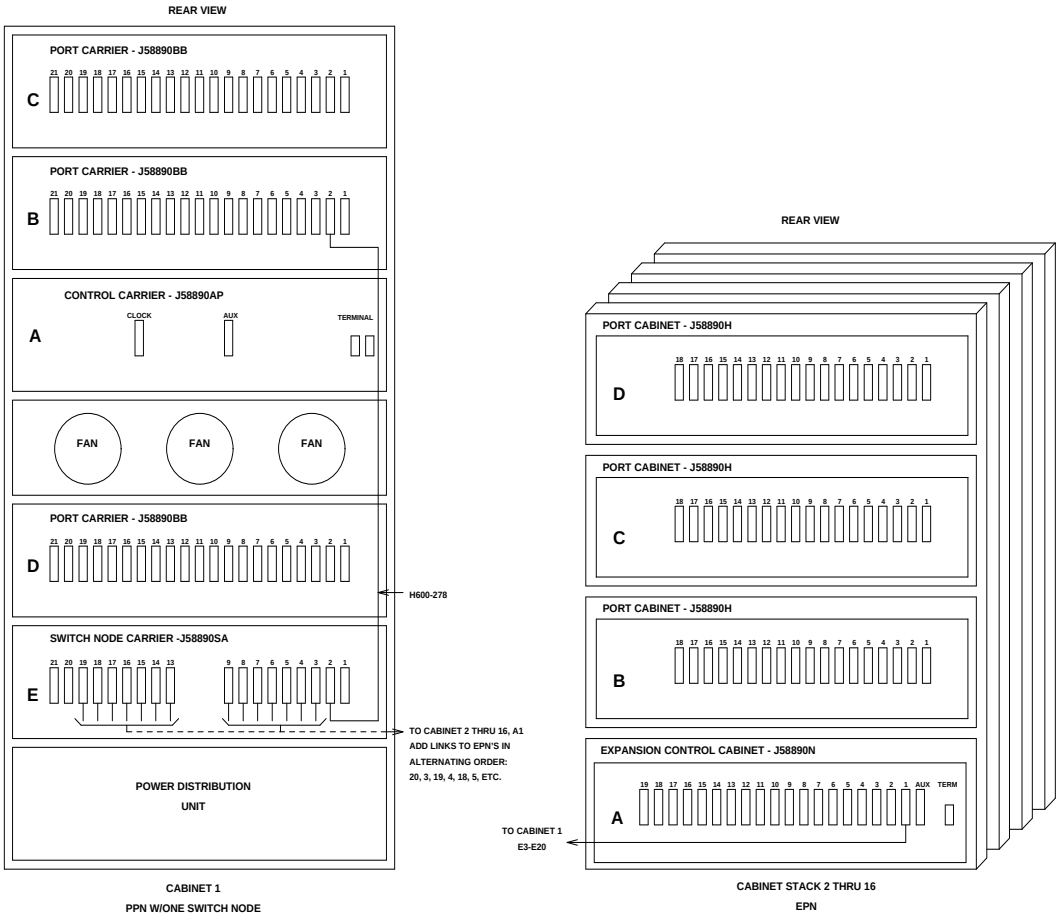

Figure 7-35. Fiber-Optic Connections through Center Stage Switch

For One to Fifteen High-Reliability EPNs.

1. Behind the PPN cabinet (see Figure 7-36):
   - Install a 9823-type lightwave transceiver on cable connector at slot 1E02.
   - Install a 9823-type lightwave transceiver on cable connector at slot 1C02.
   - Connect one end of the metallic intercarrier cable to the lightwave transceiver at slot 1E02.
   - Route the intercarrier cable from the lightwave transceiver to the cabinet's cable tray and upward to carrier ''C.''
   - Connect the other end of the intercarrier cable to the lightwave transceiver at slot 1C02.
   - Install a 9823-type lightwave transceiver on cable connector at slot 1E20.
   - Install a 9823-type lightwave transceiver on cable connector at slot 1D02.
   - Connect one end of the metallic intercarrier cable to the lightwave transceiver at slot 1E20.
   - Route the intercarrier cable from the lightwave transceiver to the cabinet's cable tray and upward to carrier ''D.''
   - Connect the other end of the intercarrier cable to the lightwave transceiver at slot 1D02.
   - Attach the intercarrier cables (with cable ties) to the wall of the cable tray at the built-in cable-tie positions.
2. Behind switch node carrier E of PPN cabinet 1 (see Figure 7-36):
   - For each EPN, install one 9823-type lightwave transceiver on a cable connector with the following order of slots: 1E03, 1E19, 1E04, 1E18, 1E05, 1E17, etc.
   - Connect one end of each fiber-optic cable to each lightwave transceiver, just installed.
   - Delicately attach the fiber-optic cables (with cable ties) to the wall of the cable tray at the built-in cable-tie positions.
3. Behind control cabinet A of each single-carrier EPN:
   - Install the same kind (either 9823-A or 9823-B) of lightwave transceiver on cable connector at slot A01.
   - Connect the other end of the fiber-optic cable to the lightwave transceiver, just installed, at slot A01.

- Delicately attach the fiber-optic cable (with cable ties) to the rear covers of the EPN stack.
- Coil up the surplus length of fiber-optic cable, and place the coil either in the cable manager or on the bottom shelf (holding the power supply) of the PPN cabinet.

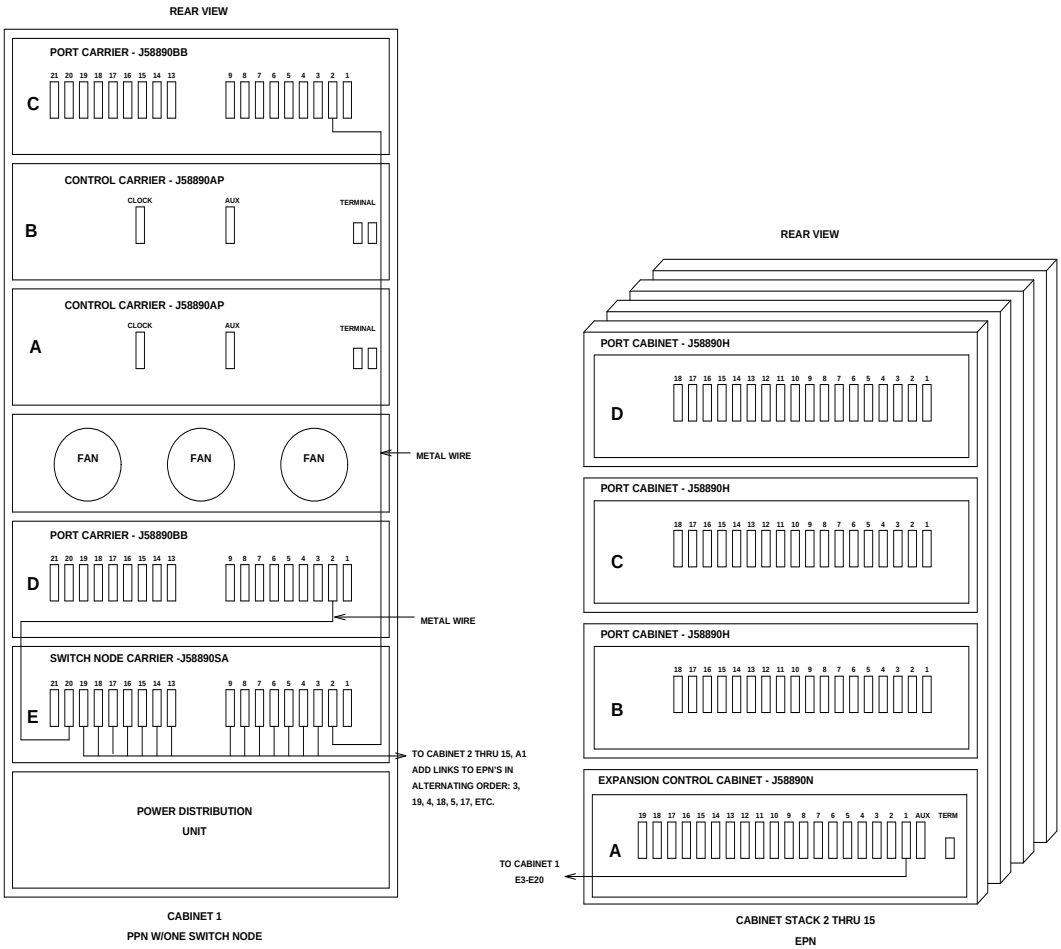

Figure 7-36. Fiber-Optic Connections through Center Stage Switch

For One to Fifteen Critical-Reliability EPNs.

1. Behind the PPN cabinet (see Figure 7-37):
   - Install a 9823-type lightwave transceiver on cable connector at slot 1E01.
   - Install a 9823-type lightwave transceiver on cable connector at slot 1E02.
   - Connect the metallic intracarrier cable to the lightwave transceivers at slots 1E01 and 1E02.
   - Install a 9823-type lightwave transceiver on cable connector at slot 1D01.
   - Install a 9823-type lightwave transceiver on cable connector at slot 1D02.
   - Connect the metallic intracarrier cable to the lightwave transceivers at slots 1D01 and 1D02.
2. Behind switch node carrier E of PPN cabinet 1 (see Figure 7-37):
   - For each EPN, install one 9823-type lightwave transceiver on a cable connector with the following order of slots: 1E20, 1E03, 1E19, 1E04, 1E18, 1E05, etc.
   - Connect one end of each fiber-optic cable to each lightwave transceiver, just installed.
   - Delicately attach the fiber-optic cables (with cable ties) to the wall of the cable tray at the built-in cable-tie positions.
3. Behind control cabinet A of each single-carrier EPN:
   - Install the same kind (either 9823-A or 9823-B) of lightwave transceiver on cable connector at slot A01.
   - Connect the other end of the fiber-optic cable to the lightwave transceiver, just installed, at slot A01.
   - Delicately attach the fiber-optic cable (with cable ties) to the rear covers of the EPN stack.
   - Coil up the surplus length of fiber-optic cable, and place the coil either in the cable manager or on the bottom shelf (holding the power supply) of the PPN cabinet.
4. Behind switch node carrier D of PPN cabinet 1 (see Figure 7-37):
   - For each EPN, install one 9823-type lightwave transceiver on a cable connector with the following order of slots: 1E20, 1E03, 1E19, 1E04, 1E18, 1E05, etc.
   - Connect one end of each fiber-optic cable to each lightwave transceiver, just installed.
   - Delicately attach the fiber-optic cables (with cable ties) to the wall of the cable tray at the built-in cable-tie positions.

5. Behind port cabinet B of each single-carrier EPN:
   - Install the same kind (either 9823-A or 9823-B) of lightwave transceiver on cable connector at slot B02.
   - Connect the other end of the fiber-optic cable to the lightwave transceiver, just installed, at slot B02.
   - Delicately attach the fiber-optic cable (with cable ties) to the rear covers of the EPN stack.
   - Coil up the surplus length of fiber-optic cable, and place the coil either in the cable manager or on the bottom shelf (holding the power supply) of the PPN cabinet.

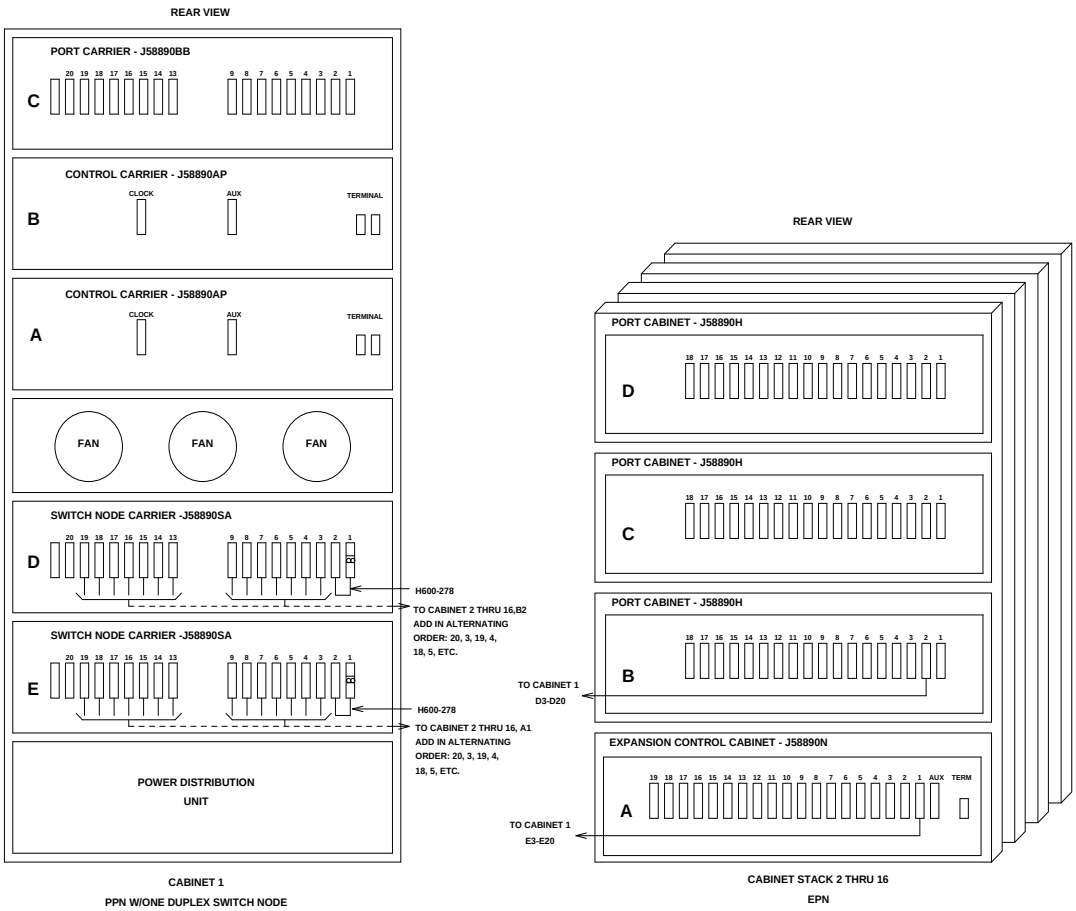

Figure 7-37. Fiber-Optic Connections through Center Stage Switch

DS1C-Remoted Cabinets

See NOTES. Digital Services 1 (DS1) facilities and associated equipment-room hardware and cabling can interconnect two port networks (PNs) located up to 100 miles apart. Although DS1 remoting always serves as a lower-bandwidth alternative to fiber remoting, DS1 remoting is especially attractive when:

- Fiber-optic cabling is unavailable to the remote site
- When the desired distance between the port networks exceeds the practical fiber limit of 25,000 feet (about 4.7 miles)
- Digital Services facilities, with enough bandwidth for interconnection, already exist between the two port networks

NOTE:
As always, these distance limitations are approximate measurements of the *actual* fiber or copper right-of-way (not of the shortest linear distance) between the two endpoints.

NOTE:
The 100-mile limit for DS1 remoting is the maximum distance between *any* two port networks in a G3r V4 system with either direct or switched port-network connections.

For example, in a *directly connected* system, a single EPN can be remoted up to 100 miles. This is because the length of the *direct* fiber connection from any port network in the local equipment room to the remote EPN is 100 miles.

However, if more than one EPN is remoted in a directly connected system, the 100-mile limit applies to any two port networks. Assuming straight cable runs, suppose that a customer wants to remote one EPN 80 miles due east and another EPN due north of the local PPN. This arrangement can only be accommodated if the second EPN resides no more than 60 miles north of the PPN. This is because the direct fiber distance between the two EPNs is also limited to 100 miles.

As another example, in *switch-connected* system with numerous port networks, one EPN might be remoted 75 miles from the switch node. If this were the case, then the maximum distance that any other EPN could be remoted would be 25 miles.

Digital public-network tie-trunk facilities provide the end-to end connectivity between the port networks. For either type of port network (PPN or EPN), a TN574 DS1 Converter (DS1C) circuit pack serves as the port-network interface to the DS1 facilities. As a PPN interface, a TN574 DS1C can reside in either:

- A port carrier (in any port slot)
- A switched node carrier (in port slot ‘‘1’’ or ‘‘21’’)

As an EPN interface, a TN574 DS1C can reside in an expansion control carrier (in any port slot).

DS1 Cabling within the Local Port Networks. See NOTE. Use the running list that accompanies the upgrade equipment to determine which cable should be connected where. The following paragraphs only provide conceptual information about wiring a DS1C interface either to an expansion interface or to a switched node interface, not step-by-step procedures for wiring a specific G3r V4 system.

NOTE:
It is important to label every cable that you install. For details, refer to the section, *Labels for Fiber-Optic Cables*, in Appendix E of the installation manual.

As shown in Figure 7-38, a cable connects each DS1C either to the appropriate TN570 expansion interface (for a direct connection to another port network) or to the appropriate TN573 SN Interface (for a switched connection to another port network). On the DS1C side, a 4C retainer binds this shielded cable to the DS1C port connector. On the EI/SNI side, a 4B retainer binds the cable to the EI/SNI port connector. The DS1C-to-EI/SNI cable also provides a piggy-back connector enabling subsequent access to the public network. Table 7-4 lists the cable numbers and lengths for the possible connections.

Table 7-6. Numbers and Lengths of DS1C-to-EI/SNI Cables

Connection Type	Comcode Number	Length
Within same carrier	846448637	1 foot
Between two carriers in same port network	846448645	5.5 feet
Between two carriers in adjacent networks	846448652, and one 846885259 bracket	1 foot (used with two 9823As, & one 20-foot fiber-optic cable)

DS1 Cabling to the Public Network. See NOTE. Use the running list that accompanies the upgrade equipment to determine which cable should be connected where. The following paragraphs only provide conceptual information about wiring a DS1C interface to a wall-field block, not step-by-step procedures for wiring a specific G3r V4 system.

NOTE:
It is important to label every cable that you install. For details, refer to the section, *Labels for Fiber-Optic Cables*, in Appendix E of the installation manual.

Figure 7-38 also shows the cabling between various port networks and the cross-connect field where the public network is accessed. If already connected to either an expansion or switched node interface, a DS1C circuit pack already resides either in an EPN expansion control carrier or in a PPN port carrier or switched node carrier.

Depending on the traffic requirements between the two port networks, a 25-foot H600-348 cable extends from the piggy-back connector (on each DS1C-to-EI/SNI cable) to from one to four channel service units (CSUs). [This cable branches to four 15-pin subminiature D-type connectors (labeled ‘‘01’’ to ‘‘04’’) to make the CSU connections.] Then, in turn, the CSU(s) are connected to the wall-field block (corresponding to the equipment location of the DS1C) at port connections ‘‘8,’’ ‘‘7,’’ ‘‘6,’’ and ‘‘5’’ (in descending order).

Neglecting overhead, this wiring arrangement can provide PN-to-PN communication at the bandwidth of up to four DS1 spans (1.544 Mbps each). Between each port network’s wall field, the port networks communicate across leased lines in the public network.

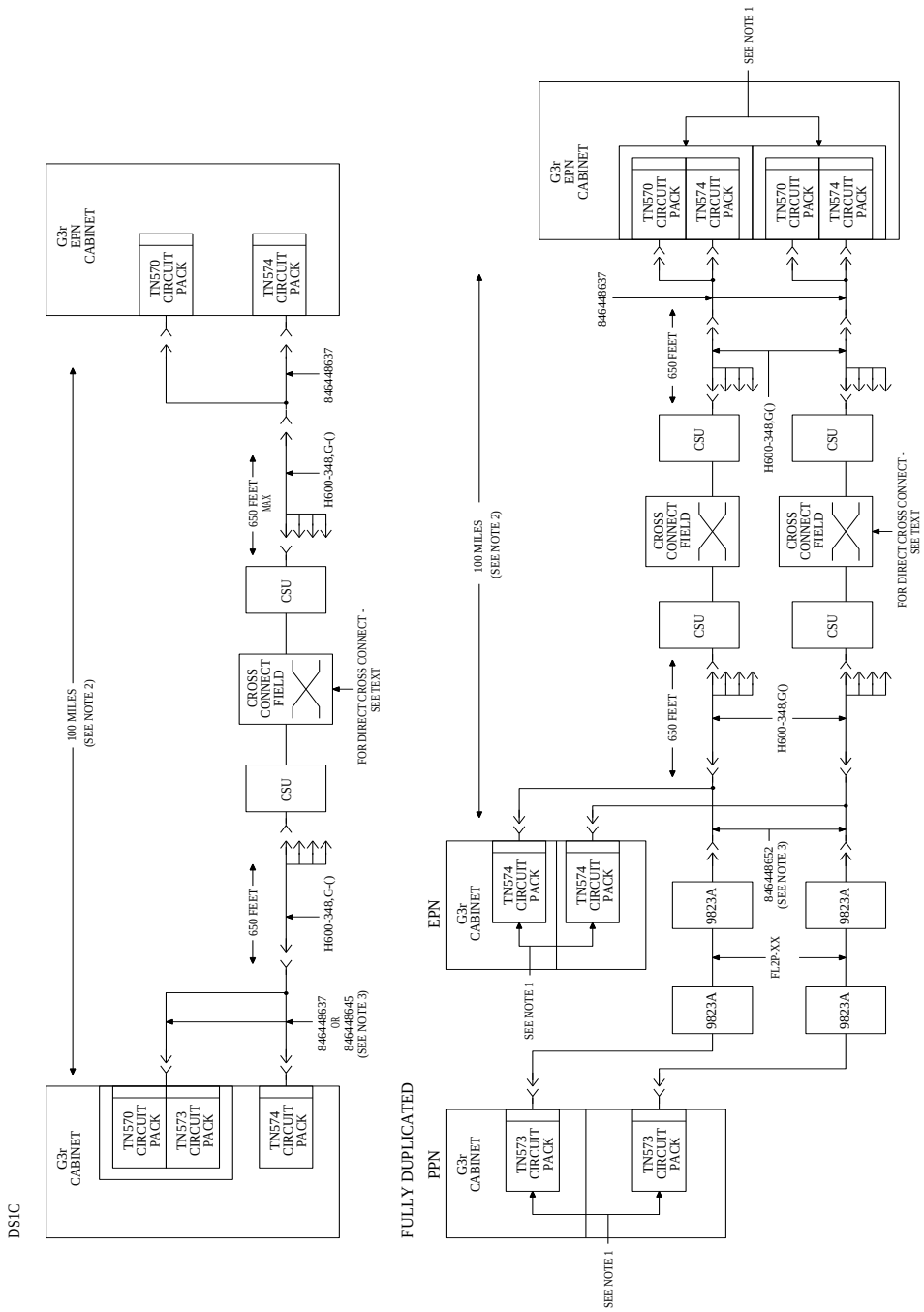

Figure 7-38. DS1 Connectivity between Remote PNs

Install Ground Plate(s)

NOTE:
If the system being upgraded is mounted with earthquake protection, do not install the ground plates at this time.

A ground plate is required between each cabinet (see Figure 7-39). The ground plate not only provides the ground connection between cabinets, it also stabilizes the cabinets.

1. See NOTE. Behind the cabinets, replace the upper and lower covers (leave the screws loose).

   NOTE:
   The rear covers for G3r V4 control carriers may need two detents (one for the TDM/LAN cable and another for the ICC cables). Therefore, if the G2 universal module being upgraded to a critical-reliability G3r V4's EPN was originally an R1V3 System 75, verify that the lower rear cover of the port cabinet in position ''B'' (serving as the duplicate expansion control cabinet) has been replaced with a new cover (846307817) so that the ICC cables and the new ground plate can be properly installed between cabinets ''A'' and ''B.'' If not, replace this cover with the new cover.

2. Place the ground plate over the lower rear cover of the upper cabinet so that the four screws that attach the lower rear cover go through the four ground plate keyhole slots.
3. Slide the ground plate down over the upper rear cover of the lower cabinet so that the four screws that attach the upper rear cover go through the four lower ground plate slots.
4. Assure that the exposed portion of the TDM/LAN cable that is between the cabinets does not get pinched.
5. Tighten all screws.

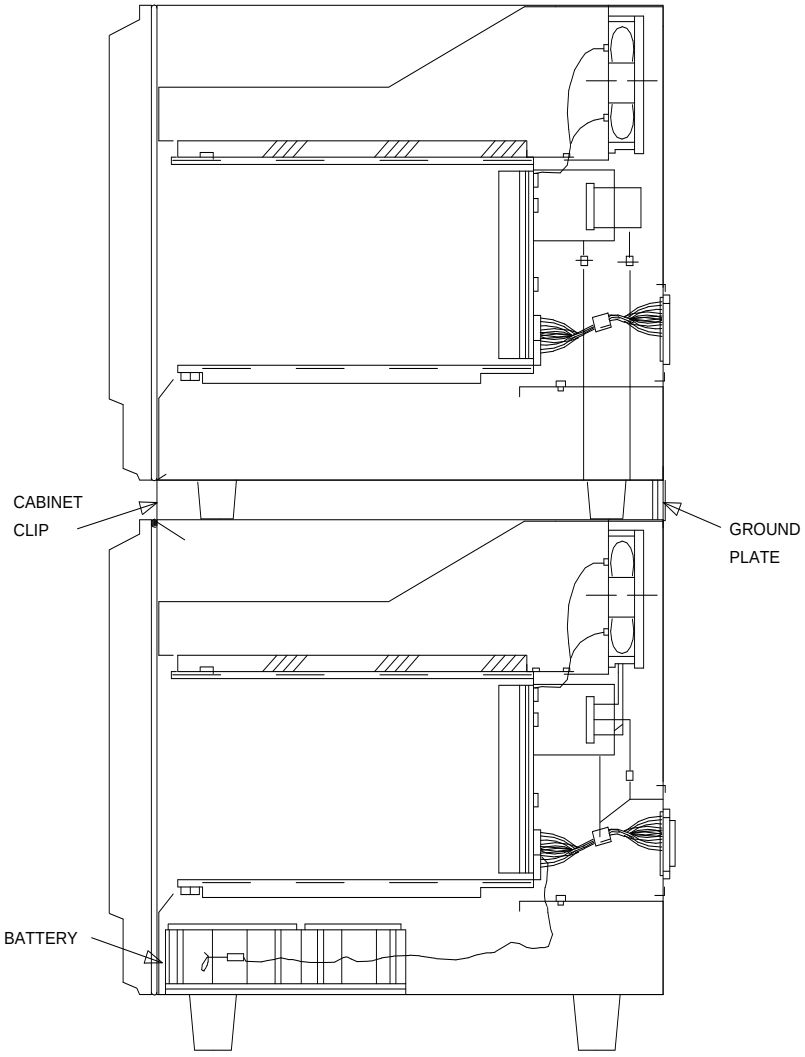

SIDE VIEW
2-CABINET PORT NETWORK

Figure 7-39. Locations of Ground Plate, Cabinet Clip, and Battery

Install Cabinet Clip(s)

NOTE:
This procedure is only used on systems without earthquake protection.

A cabinet clip, used to ground and stabilize the cabinets, is required between each cabinet.

At the front of the cabinets, install cabinet clip between the cabinets by hooking the clip into the slot of the upper cabinet and snapping the straight leg of the clip into the slot on the lower cabinet (see Figure 7-39).

Connect Power and Grounding

1. Reconnect the 6-AWG cabinet ground wire from the ground bar in the cabinet.

   NOTE:
   A screwdriver is required to loosen and tighten the bolts that secure the ground wire to the ground bar.

2. Reconnect the coupled bonding conductor.
3. Reconnect the cabinet power cords at the rear of each cabinet.

Verify Usable Circuit-Pack Vintages

Verify that every G2 circuit pack reused in the upgrade conforms to the usable vintage requirements for a G3r V4 system (see Reference Guide for Circuit-Pack Vintages and Change Notices).

Install System Access Ports

As a prerequisite for connecting various endpoints that use EIA interfaces to the G3r V4 system, install the up to eight loop-around connections for Mode 2-to-Mode 3 (and vice versa) data conversion.

From the *outgoing* perspective of the system communicating with an EIA endpoint, these loop-around connections convert Mode 3 data (circuit-switched packet data, with undefined bit rates and packet specifications) to Mode 2 data (low-speed, usually asynchronous, data at rates of 300 to 19,200 bps) by:

- Accepting Mode 3 data off the LAN bus (from the SPE) at a TN553 Packet Data Line circuit pack, where Mode 3-to-Mode 2 conversion is done
- Routing the converted data through the cross-connect field and back to a TN726B Data Line where the equivalent Mode 2 data can access the TDM bus, for subsequent routing to an EIA endpoint

The endpoints that use these EIA interfaces and, therefore, require the Mode 2-to-Mode 3 conversion include:

- DEFINITY Communications System Generic 3 Management Applications (G3-MA)
- Remote DEFINITY Communications System Generic 3 Management Terminal (G3-MT)
- Basic Call Management System (BCMS) terminal
- Call Detail Recording Unit (CDRU)/Centralized Attendant Service Plus (CAS+)
- Property Management System (PMS)
- Printers

The following figures show this loop-around configuration and how the B25A cables are cross-connected.

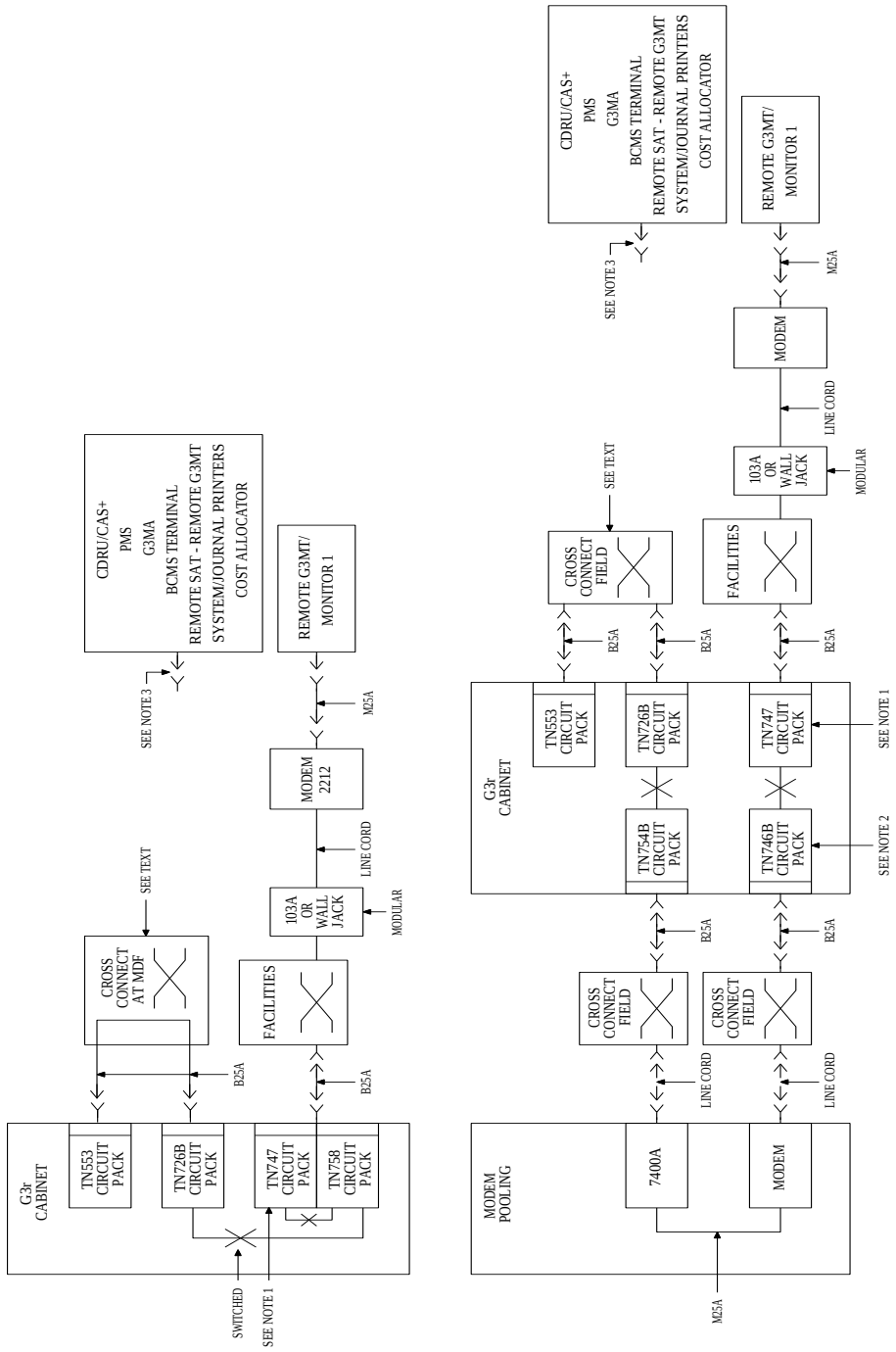

Figure 7-40. Connections: CDRU/CAS+, PMS, BCMS, Printers, G3-MA/MT

Pinouts for the TN553 and TN726B circuit packs shown cross-connected in the preceding figure are given in the table below.

Pinouts

TN553 (12 Ports)

1	26	
2	27	1
3	28	
4	29	2
5	30	
6	31	3
7	32	
8	33	4
9	34	
10	35	5
11	36	
12	37	6
13	38	
14	39	7
15	40	
16	41	8
17	42	
18	43	9
19	44	
20	45	10
21	46	
22	47	11
23	48	
24	49	12
25	50	G

TN726B (8 Ports)

1	26	Blank
2	27	
3	28	1
4	29	Blank
5	30	
6	31	2
7	32	Blank
8	33	
9	34	3
10	35	Blank
11	36	
12	37	4
13	38	Blank
14	39	
15	40	5
16	41	Blank
17	42	
18	43	6
19	44	Blank
20	45	
21	46	7
22	47	Blank
23	48	
24	49	8
25	50	Blank

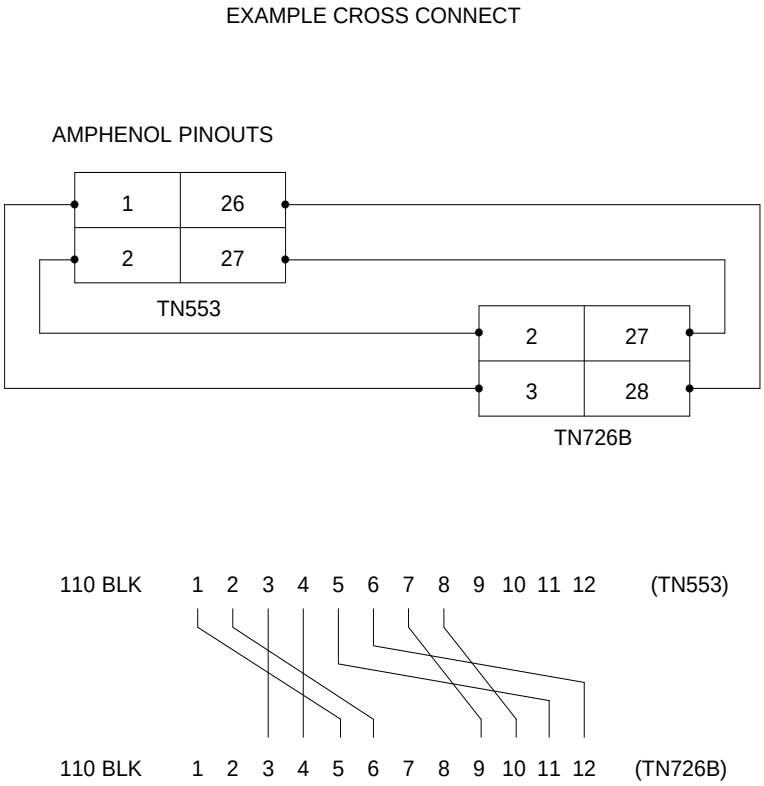

Figure 7-41. Example of Cross Connect between TN553 and TN726B

Remove Power-Failure Ground Strap

Remove the previously installed ground strap from the power-failure transfer unit.

Boot the G3r V4 System

1. Connect the G3-MT to the connector labeled ‘‘TERMINAL’’ behind PPN control carrier ‘‘A,’’ or install the G3-MA according to the ‘‘Set Up G3-MA’’ chapter of *DEFINITY Communications System Generic 3 Management Applications — Operations*, 585-229-202.
2. Verify that the new G3r V4 system tape is inserted in the PPN cabinet.
3. At each EPN power-distribution unit, set the main circuit breaker to ON.
4. At the PPN power-distribution unit, set the main circuit breaker to ON.
5. The system now goes through the reset level 4 rebooting process, loading the system translations from the preformatted disk. Rebooting requires 5 to 11 minutes.

   Refer to ‘‘Initialization and Recovery’’ and ‘‘LED Interpretation’’ chapters in *DEFINITY Communications System Generic 3r V4 Maintenance*, 555-230-105, Issue 4, for circuit-pack LED indications and screen displays that occur during system reboot.
6. Get the order number of the upgrade, and call the regional CSA to request an ‘‘init’’ login so that right-to-use options can be enabled on the upgraded system.
7. Set the time to ensure that the system is booted properly.
8. Enter `change` **`sys cust`**. Press [RETURN]. Use this form to assign the customer’s right-to-use options on the G2-to-G3r V4 upgrade order.

For a Standard-Reliability G3r V4

1. Enter **`change site-data`**. Press (RETURN). Use this form to assign system-specific information (such as building, floor, stations, etc.)
2. Enter **`change cabinet 1`**. Press (RETURN). Use this form to assign the appropriate carrier types for port network 1.
3. Enter **`save translation disk`**. Press (RETURN). This command instructs the system to write all translation information from memory to the disk.
4. Enter **`reset system 4`**. Press (RETURN). The system now goes through the reset level 4 rebooting process, loading the system translations from the disk. Rebooting requires 5 to 11 minutes.
5. Enter **`set vector 8`**. Press (RETURN). Use this form to assign the core dump vector so that fault information will be available in the event of a system failure.

For a High- or Critical-Reliability G3r V4

1. Enter **`logoff`**. Press (RETURN). (After assigning the customer's right-to-use options, another log-in process is required.)
2. Log in as ''craft'' at the `login:` prompt on the G3-MT. (After assigning the customer's right-to-use options, the ''init'' log-in privileges are no longer necessary.)
3. Enter **`change site-data`**. Press (RETURN). Use this form to assign system-specific information (for example building, floor, stations, etc.)
4. Enter **`change cabinet 1`**. Press (RETURN). Use this form to assign the appropriate carrier types for port network 1.
5. Enter **`change sys dup`**. Press (RETURN). Use this form to enable high reliability (SPE duplication) or critical reliability (SPE and PNC duplication) for the system.
6. Enter **`save translation disk`**. Press (RETURN). This command instructs the system to write all translation information from memory to the disk.
7. Enter **`reset system 3`**. Press (RETURN). The system now goes through the reset level 3 rebooting process, reloading translations to activate the duplication option.
8. Log in as ''craft'' at the `login:` prompt on the G3-MT.
9. After about eight minutes, enter **`status spe`**. Press (RETURN). This command can provide state-of-health information for both system processors (SPEs). Verify that the standby SPE is refreshed and that the standby disk is in service.
10. Enter **`save translation disk`**. Press (RETURN). This command instructs the system to write all translation information from memory to both disks.

Close Upgraded EPN Stack without Earthquake Protection and Reconnect Cables

1. Behind each EPN cabinet's power supply, set the circuit breaker to OFF.

   NOTE:
   Powering down an EPN cabinet without powering down the PPN will set off alarms. However, these alarms should clear after power is restored to the EPN.

2. Replace all cables that were labeled and removed.
3. Install the front door on each cabinet.
4. Install the top and bottom rear covers. Be sure that the correct rear covers are installed on the new J58890N-1 expansion control cabinet. Do not use these rear covers on the port cabinets.

Close Upgraded EPN Stack with Earthquake Mounting and Reconnect Cables

1. Behind each EPN cabinet's power supply, set the circuit breaker to OFF.

   NOTE:
   Powering down an EPN cabinet without powering down the PPN will set off alarms. However, these alarms should clear after power is restored to the EPN.

2. Replace all cables that were labeled and removed.
3. Install the upper and lower rear covers with all of the screws except for the screws that run along the top and bottom of the cabinet. Do not tighten the screws.

   NOTE:
   The rear covers for G3r V4 control carriers may need two detents (one for the TDM/LAN cable and another for the ICC cables). Therefore, if the G2 universal module being upgraded to a critical-reliability G3r V4's EPN was originally an R1V3 System 75, verify that the lower rear cover of the port cabinet in position ''B'' (serving as the duplicate expansion control cabinet) has been replaced with a new cover (846307817) so that the ICC cables and the new ground plate can be properly installed between cabinets ''A'' and ''B.'' If not, replace this cover with the new cover.

4. Line up the four holes in the ground plate with the four holes and install the screws, but do not tighten.
5. Line up the ground plate with the top holes of the upper rear cover of the lower cabinet. Install the four screws, but do not tighten.

6. At the front of the cabinet, line up the earthquake front plate with the holes at the top and bottom of the cabinet (see Figure 7-42). Install the eight screws, but do not tighten.
7. Tighten all screws.
8. Repeat Steps 3 through 7 for the remaining cabinets.
9. Install the front door on each cabinet.

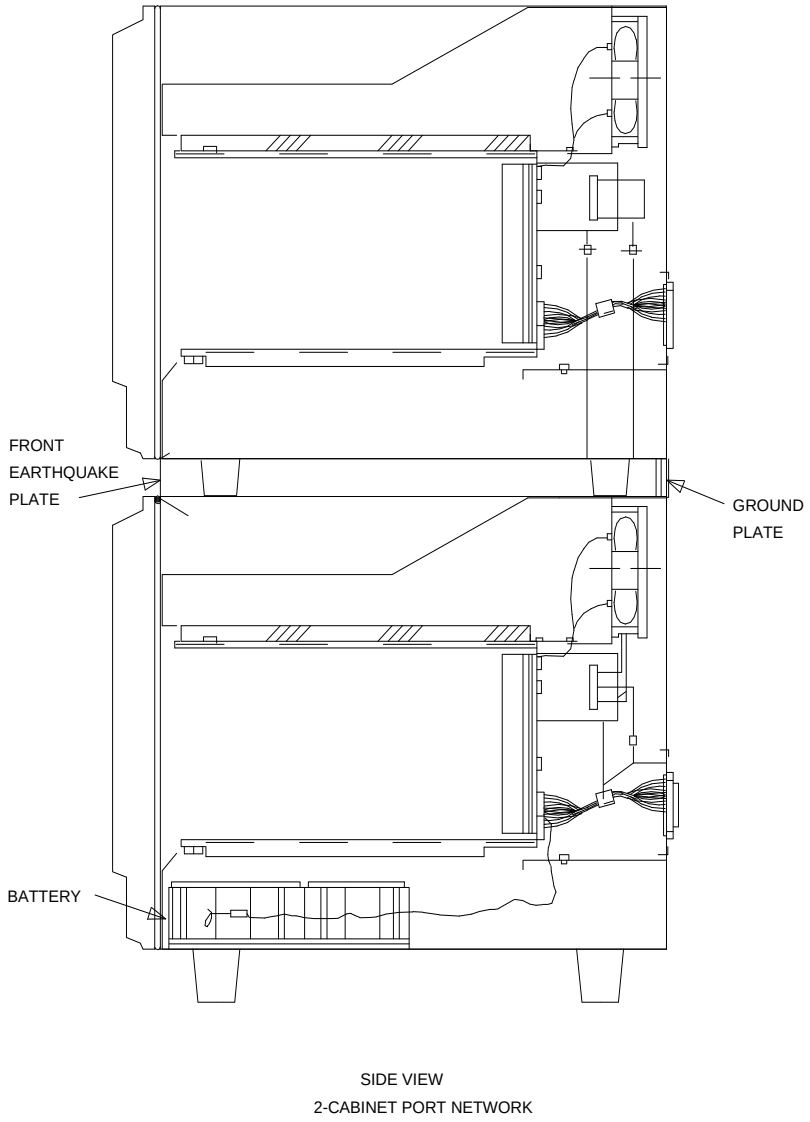

Figure 7-42. Locations of Ground Plate, Earthquake Front Plate, and Battery

Install Cable Clamps

Behind the cabinets, using screws provided, install two cable clamps on each ground plate (see Figure 7-43). These clamps are used to hold the port cables.

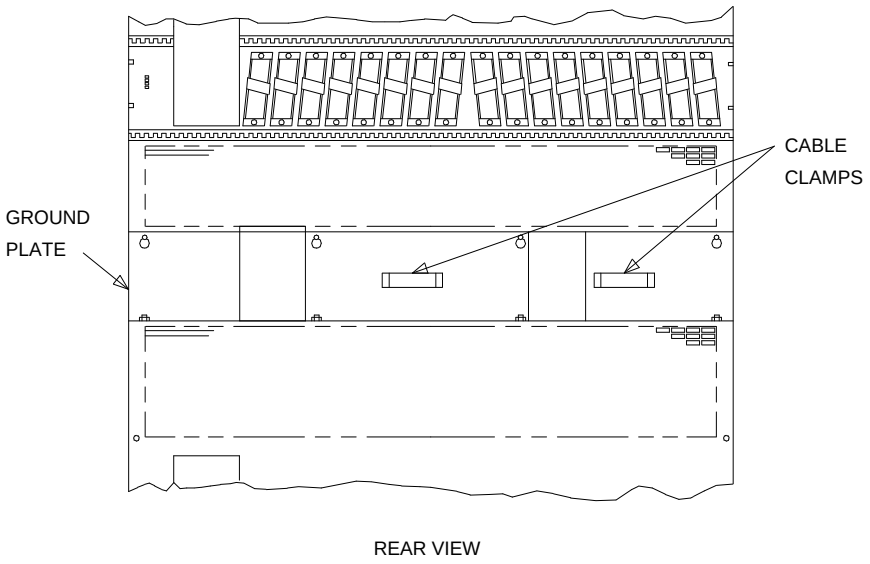

Figure 7-43. Locations of Ground Plate and Cable Clamps on Single-Carrier Cabinet

Power Up the EPN Cabinets

1. Behind each EPN cabinet's power supply, set the circuit breaker to ON.

   After about 40 seconds, EPN power and PPN/EPN communications return.

2. After power returns to the EPN and all trouble is cleared, verify that the EMERGENCY TRANSFER CONTROL switch is set to AUTO. This restores the system to the normal mode.

Retranslate Port Circuits

If port circuit packs in the G2 module control cabinet were relocated in order to put:

- A TN755 power supply in port slots "16" and "17"
- A TN570 Expansion Interface in port slot "1"

- A TN570 in port slot ‘‘2’’ (for a second directly connected EPN)
- A critical port circuit pack, requiring longer nominal battery holdover (e.g., a DS1 or an Announcement circuit pack), in a port slot

of the new expansion control cabinet, they must be retranslated now. Refer to *DEFINITY Communications System Generic 3 V4 Implementation*, 555-230-655, for instructions on performing the retranslations.

Run Acceptance Tests

Refer to Chapter 11 of *DEFINITY Communications System Generic 1 and Generic 3 Installation and Test*, 555-230-104, Issue 5, and perform the appropriate tests.

Register System as G3r V4

Get the serial number of the new G3r V4 PPN, and call the INADS Database Administrator at the Technical Service Center (1-800-248-1111) to register the upgraded system as a G3r V4.

Return Replaced G2 Equipment

The G2 equipment replaced, during the upgrade to G3r V4, should be returned to AT&T according to the requirements outlined in:

BCS/Material Logistics, MSL/Attended Stocking Locations

Methods and Procedures for Basic Material Returns

The replaced G2 equipment includes:

- G2 common control (CC) cabinet, carriers, and circuit packs and G2 time-multiplexed switch (TMS) cabinet, carriers, and circuit packs

  or

  G2 CC/TMS cabinet, carriers, and circuit packs
- G2 traditional module cabinets, carriers, and circuit packs
- G2 module control cabinets (J58890P) and control circuit packs
- G2 tape cartridges
- Lower rear cover for expansion control cabinet
- 4-series lightwave transceivers

G3r V1 to G3r V1.1 or G3r V2

8

This chapter provides the information necessary to perform:

- A maintenance update from a DEFINITY® G3r V1 to a DEFINITY G3r V1.1 system
- An upgrade from a DEFINITY G3r V1 to a DEFINITY G3r V2 system

The software involved in the updates or upgrades and their procedures are also provided.

The following processes are required for a G3r V1 to a G3r V1.1 maintenance update or for a G3r V1 to a G3r V2 PPN upgrade:

- Replacing the software tape
- Updating or upgrading the software

  This involves saving, loading, and (when necessary) reentering system translations.
- Testing the updated or upgraded system to verify proper operation

G3r V1.1 and G3r V2 features and functions are listed in the *DEFINITY Communications System Generic 3 Feature Description*, 555-230-204. *DEFINITY Communication System Generic 3 V1.1 Implementation*, 555-230-654, provides the commands, procedures, and forms required to initialize and administer the G3r V1.1. *DEFINITY Communication System Generic 3 V2 Implementation*, 555-230-653, provides the commands, procedures, and forms required to initialize and administer the G3r V2.

Considerations

Service Interruption

The G3r V1.1 update process or the G3r V2 upgrade process requires a non-call preserving service interruption which occurs during a reboot with the G3r V1.1 or G3r V2 tapes. This service interruption (of about 15 to 20 minutes for a simplex system and about 5 minutes for a duplex system) must be closely coordinated with the customer and the local account team.

Usable Circuit-Pack Vintages

Every circuit pack used in the updated G3r V1.1 or the upgraded G3r V2 system must conform to the minimum usable vintage requirements for that system. At a presale site inspection, the Quality Protection Plan Change Notice (QPPCN) process must check the vintages of every G3r V1 circuit pack that will be reused in the updated G3r V1.1 or in the upgraded G3r V2 and, if necessary, replace those circuit packs that have unusable vintages.

Refer to *Technical Monthly*, Reference Guide for Circuit-Pack Vintages and Change Notices, for current information about usable vintages in a G3r V1.1 or G3r V2 system.

Verify Tape EDIs Are Acceptable for Update or Upgrade

At the same presale site inspection, verify that the EDI versions of the G3r V1 system tapes are current enough for a successful G3r V1.1 update or G3r V2 upgrade.

For a successful on-site translation update or upgrade, the G3r V1 tape versions must be at least Release 6.7 (EDI 5.0).

If the system tapes are *not* an acceptable version:

1. Replace the system tapes with acceptable spare tapes acquired through the QPPCN process, and wait for the tapes to retension.
2. If the system is high- or critical-reliability, enter **`status spe`**, and press (RETURN) to verify that the standby SPE is refreshed and that the standby disk is in service.
3. Enter **`save translation tape [both]`**, and press (RETURN).

4. Enter **`restore disk install`**. Press (RETURN). This command instructs the system to copy a set of system software files from the new G3r V1 tapes to the disks. This command takes about 12 minutes to execute.
5. Enter **`upgrade software xx.xx`** `(include entire software-version number)`. Press (RETURN). This command instructs the system to:
   - Lock out access of other administration terminals to the system
   - Save current G3r V1 translations to disks
   - Load system software and translations from the disks to memory

   This process takes about 15 minutes to execute.

   For an update to an acceptable tape EDI, the ''upgrade software'' command is usually call preserving.

For the remainder of this update or upgrade, consider these tapes as the G3r V1 system tapes.

Software

Like the G3r V1, the G3r V1.1 and G3r V2 software and translations are saved on the TN1656 Tape Drive circuit pack. Although the G3r V1 translations automatically update to G3r V1.1 or upgrade to a G3r V2, several features require special attention because of form changes or potential naming conflicts in the process.

After the update or upgrade, the Software Associate should check these forms to ensure that the translations are appropriate for the customer's needs. For information to make the required changes, refer to:

- *DEFINITY Communications System Generic 3 V2 Transition Reference*, 555-230-498
- *DEFINITY Communications System Generic 3 V1.1 Implementation*, 555-230-654

  or

  DEFINITY Communications System Generic 3 V2 Implementation, 555-230-653

Circuit Packs

No new circuit packs are required for a basic G3r V1.1 system update or for a G3r V2 system upgrade.

However, since G3i V4 supports international call-processing applications, a wide variety of non-US circuit packs can also be used in this system. For a listing and description of these circuit packs, refer to Chapter 24, "DEFINITY Circuit Packs".

Software-Translation Update or Upgrade

Since the G3r V1.1 and G3r V2 use the same format and tape drive as the G3r V1, updating the software to G3r V1.1 or upgrading the software to G3r V2 is a simple task. As a fall-back precaution, the current translations are saved to the existing G3r V1 tape. Then, the new G3r V1.1 or G3r V2 tape replaces the G3r V1 tape, and the current translations are saved to the new G3r V1.1 or G3r V2 tape. Next, the system is rebooted with the G3r V1.1 or G3r V2 tape.

The instructions on how and when to do these operations are included in the "System Updates and Upgrades" section of this chapter.

System Updates and Upgrades

There are many configurations of DEFINITY G3r V1 in the field. In terms of both hardware and software, each system can have a unique configuration. However, updating a G3r V1 PPN to a G3r V1.1 PPN or upgrading a G3r V1 PPN to a G3r V2 PPN requires no hardware changes.

If the upgrade involves adding a new cabinet, refer to *DEFINITY Communications System Generic 1 and Generic 3 Installation and Test*, 555-230-104, Issue 5, for the installation procedures.

Standard-Reliability G3r V1 to Standard-Reliability G3r V1.1 or G3r V2

A standard-reliability G3r V1 is either:

- Updated to a standard-reliability G3r V1.1
- Upgraded to a standard-reliability G3r V2

by installing the G3r V1.1 or G3r V2 tape, downloading the existing translations onto it, copying the tape's translations to disk, and rebooting from disk.

Prerequisite Hardware

The equipment in the following table *must* be on-site before the G3r V1.1 update or G3r V2 upgrade begins. Ensure that the new tapes are G3r V1.1 or G3r V2 tapes.

Table 8-1. Required Hardware

Equipment	Description	Quantity
J58890TF L2	G3r V1.1 Tape	1 (Note 1)
or		
J58890TF L2	G3r V2	1 (Note 2)

Notes:

1. Acquired from the Technical Service Center.
2. Shipped from the factory.

Required Tools

One copy of each of the following manuals may be required during the update or upgrade:

- *DEFINITY Communications System Generic 3r V1 and V2 Maintenance*, 555-230-105, Issue 3
- *DEFINITY Communications System Generic 3 V1.1 Implementation*, 555-230-654
- *DEFINITY Communications System Generic 3 V2 Implementation*, 555-230-653

Open PPN Cabinet's Door

Use a screwdriver, and turn the three door-latch screws clockwise one-fourth turn to open the door.

Verify System Status

Before proceeding, the system should be examined for alarms, and every possible problem should be corrected. Except for an unresolved alarm that may be the reason for a G3r V1.1 maintenance update, the system must be alarm-free.

Save Current Translations to G3r V1 Tape

As a fall-back precaution, the current G3r V1 translations should first be saved to the system tape.

1. Log in at the G3-MT terminal.
2. Enter **`change system-parameters maintenance`**, and press (RETURN). Use this form to change the ''Save Translation'' field to ''no.'' This command will prevent the maintenance software from activating the disk.
3. Enter **`save translation`**. Press (RETURN). This command instructs the system to write all translation information from memory to the G3r V1 disk.
4. If the system is equipped with a TN750/B Announcement circuit pack, the recorded announcements can be saved using the save announcements command. Enter **`save announcements`**. Press (RETURN).
5. Enter **`backup disk`**, and press (RETURN). This command instructs the system to backup the current information on disk to the G3r V1 system tape.

Download Current Software and Translations to Disk and Reboot

1. Remove the G3r V1 system tape, install the G3r V1.1 or G3r V2 tape, and wait for the tape to retension.
2. If the system is equipped with a TN750/B Announcement circuit pack, enter **`copy announcements tape`**. Press (RETURN). This command takes about 5 minutes to execute.
3. Enter **`save translation tape`**. Press (RETURN). This command takes about 15 minutes to execute.
4. Enter **`restore disk full`**. Press (RETURN). This command instructs the system to copy the entire tape to disk. This command takes about 30 minutes to execute.

5. Enter **`upgrade software`** (entire software-version number). Press (RETURN). This command instructs the system to:
   - Lock out access of other administration terminals to the system
   - Save current G3r V1.1 or G3r V2 translations to disk
   - Load system software and translations from the disk to memory

   This process takes about 15 minutes to execute.

   For a G3r V1.1 update or for a G3r V2 upgrade, the ''upgrade software'' command is *not* call preserving.
6. For a G3r V1.1 update, log in at the `login:` prompt on the G3-MT or G3-MA.

   For a G3r V2 upgrade, get the order number of the upgrade, and call the regional CSA to request an ''init'' login so that the G3 V2 option can be enabled on the upgraded system.
7. Enter **`set time`**, and press (RETURN) to set the time and ensure that the system is booted properly.

Administer the Updated or Upgraded System

1. Enter **`change system-parameters maintenance`**, and press (RETURN). Use this form to change the ''Save Translation'' field back to its previous value before the upgrade.
2. For a G3r V2 upgrade only, enter **`change system-parameters customer-options`**. Press (RETURN). Use this form to enable the G3 V2 option. See *DEFINITY Communications System Generic 3 V2 Implementation*, 555-230-653, for details on enabling this option.

   NOTE:
   Certain forms have changed for G3r V1.1 and G3r V2. Updated or upgraded G3r V1 translations may appear on a different form, fields may have shifted within a form, and/or the names assigned to particular fields may have changed. Refer to:

   - *DEFINITY Communications System Generic 3 V2 Transition Reference*, 555-230-498
   - *DEFINITY Communications System Generic 3 V1.1 Implementation*, 555-230-654

     or

     DEFINITY Communications System Generic 3 V2 Implementation, 555-230-653

   and make the necessary changes.

Save New Translations to Disk and Back Up Translations to Tape

1. Enter **`save translation`**. Press (RETURN). This command instructs the system to write the changed "Save Translation" field and, if assigned, the G3 V2 option from memory to the G3r V1.1 or G3r V2 disk.
2. Enter **`backup disk`**. Press (RETURN). This command instructs the system to backup the current information on disk to the G3r V1.1 or G3r V2 system tape.

Verify Success of the Update or Upgrade

1. Enter **`test stored-data`**. Press (RETURN). This command instructs the system to verify the consistency of the MSS files (on the disk and tape).
2. Enter **`list config soft`**. Press (RETURN). Verify that the software in memory and on the disk has the expected load.

Set the Core-Dump Vector

Enter **`set vector 8`**. Press (RETURN). Use this form to assign the core dump vector so that fault information will be available in the event of a system failure.

Close Cabinet Door

Close the front door and secure with the three latches.

Run Acceptance Tests

Refer to of *DEFINITY Communications System Generic 1 and Generic 3 Installation and Test*, 555-230-104, Issue 5, and perform the appropriate tests.

Register System as G3r V1.1 or G3r V2

Get the serial number of the G3r V1.1 or G3r V2, and call the INADS Database Administrator at the Technical Service Center (1-800-248-1111) to register the updated system as a G3r V1.1 or the upgraded system as a G3r V2.

Return Replaced Equipment

The G3r V1 equipment replaced, during the update to G3r V1.1 or the upgrade to G3r V2, should be returned to AT&T according to the requirements outlined in:

BCS/Material Logistics, MSL/Attended Stocking Locations

Methods and Procedures for Basic Material Returns

The replaced equipment includes the G3r V1 tape cartridges.

High- or Critical-Reliability G3r V1 to High- or Critical-Reliability G3r V1.1 or G3r V2

A high- or critical-reliability G3r V1 is either:

- Updated to a high- or critical-reliability G3r V1.1
- Upgraded to a high- or critical-reliability G3r V2

by installing the G3r V1.1 or G3r V2 tapes, downloading the existing translations onto them, copying the tapes' translations to disks, and rebooting from the disks.

Prerequisite Hardware

The equipment in the following table *must* be on-site before the G3r V1.1 update or G3r V2 upgrade begins. Ensure that the new tapes are G3r V1.1 or G3r V2 tapes.

Table 8-2. Required Hardware

Equipment	Description	Quantity
J58890TF L2	G3r V1.1 Tape	2 (Note 1)
or		
J58890TF L2	G3r V2 Tape	2 (Note 2)

Notes:

1. Acquired from the Technical Service Center.
2. Shipped from the factory.

Required Tools

One copy of each of the following manuals may be required during the update or upgrade:

- *DEFINITY Communications System Generic 3r V1 and V2 Maintenance*, 555-230-105, Issue 3
- *DEFINITY Communications System Generic 3 V1.1 Implementation*, 555-230-654
- *DEFINITY Communications System Generic 3 V2 Implementation*, 555-230-653

Open PPN Cabinet's Door

Use a screwdriver, and turn the three door-latch screws clockwise one-fourth turn to open the door.

Verify System Status

Before proceeding, the system should be examined for alarms, and every possible problem should be corrected. Except for an unresolved alarm that may be the reason for a G3r V1.1 maintenance update, the system must be alarm-free.

Save Current Translations to G3r V1 Tapes

As a fall-back precaution, the current G3r V1 translations should first be saved to the system tapes.

1. Log in at the G3-MT terminal.
2. Enter **`change system-parameters maintenance`**, and press (RETURN) to change the "Save Translation" field to "no." This command will prevent the maintenance software from activating the disks.
3. Enter **`status spe`**, and press (RETURN) to verify that the standby SPE is refreshed and that the standby disk is in service.
4. Enter **`save translation both`**. Press (RETURN). This command instructs the system to write all translation information from memory to the G3r V1 disks.
5. If the system is equipped with a TN750/B Announcement circuit pack, the recorded announcements can be saved using the save announcements command. Enter **`save announcements`**. Press (RETURN).
6. Enter **`backup disk`**, and press (RETURN). This command instructs the system to backup the current information on disk to the G3r V1 system tapes.

Download Current Software and Translations to Disk and Reboot

1. Remove the G3r V1 system tapes, install the G3r V1.1 or G3r V2 tapes, and wait for the tapes to retension.
2. If the system is equipped with a TN750/B Announcement circuit pack, enter **`copy announcements spe-b tape`**. Press (RETURN). This command takes about 5 minutes to execute.
3. If the system is equipped with a TN750/B Announcement circuit pack, enter **`copy announcements spe-a tape`**. Press (RETURN). This command takes about 5 minutes to execute.

4. Enter **`save translation tape`**. Press (RETURN). This command takes about 15 minutes to execute.
5. Enter **`restore disk full both`**. Press (RETURN). This command instructs the system to copy the entire tape to disk. This command takes about 30 minutes to execute.
6. Enter **`upgrade software xx.xx`** `(entire software-version number)`. Press (RETURN). This command instructs the system to:
   - Lock out access of other administration terminals to the system
   - Save current G3r V1.1 or G3r V2 translations to the disks
   - Load system software and translations from the disks to memory
   - Interchange the new software load

   This process takes about 15 minutes to execute.

   For a G3r V1.1 update or for a G3r V2 upgrade, the ''upgrade software'' command is *not* call preserving. (The service outage is about 2 minutes)
7. For a G3r V1.1 update, log in at the `login:` prompt on the G3-MT or G3-MA.

   For a G3r V2 upgrade, get the order number of the upgrade, and call the regional CSA to request an ''init'' login so that the G3 V2 option can be enabled on the upgraded system.
8. Enter **`set time`**, and press (RETURN) to set the time and ensure that the system is booted properly.

Verify State of Health of the SPEs

1. Enter **`status spe`**, and press (RETURN) to verify that the active SPE is fully functional.
2. Enter **`reset spe-standby 4`**, and press (RETURN) to get the new load running on the standby SPE.
3. Enter **`status spe`**, and press (RETURN). Repeat this command until memory shadowing is up to date (standby refreshed) and until both SPEs are fully functional.

Administer the Updated or Upgraded System

1. Enter **`change system-parameters maintenance`**, and press (RETURN) to change the ''Save Translation'' field back to its previous value before the upgrade.
2. For a G3r V2 upgrade only, enter **`change system-parameters customer-options`**. Press (RETURN). Use this form to enable the G3 V2 option. See *DEFINITY Communications System Generic 3 V2 Implementation*, 555-230-653, for details on enabling this option.

NOTE:
Certain forms have changed for G3r V1.1 and G3r V2. Updated or upgraded G3r V1 translations may appear on a different form, fields may have shifted within a form, and/or the names assigned to particular fields may have changed. Refer to:

- *DEFINITY Communications System Generic 3 V2 Transition Reference*, 555-230-498
- *DEFINITY Communications System Generic 3 V1.1 Implementation*, 555-230-654

  or

  DEFINITY Communications System Generic 3 V2 Implementation, 555-230-653

and make the necessary changes.

Save New Translations to Disk and Back Up Translations to Tape

1. Enter **`save translation both`**. Press (RETURN). This command instructs the system to write the changed ''Save Translation'' field and, if assigned, the G3 V2 option from memory to the G3r V1.1 or G3r V2 disks.
2. Enter **`backup disk`**. Press (RETURN). This command instructs the system to backup the current information on disk to the G3r V1.1 or G3r V2 system tapes.

Verify Success of the Update or Upgrade

1. Enter **`test stored-data`**. Press (RETURN). This command instructs the system to verify the consistency of the MSS files (on the disks and tapes).
2. Enter **`list config soft long`**. Press (RETURN). Verify that the software in memory and on both disks has the expected load.

Set the Core-Dump Vector

Enter **`set vector f spe-maint`**. Press (RETURN). Use this form to assign the core dump vector so that fault information will be available in the event of a system failure.

Close Cabinet Door

Close the front door and secure with the three latches.

Run Acceptance Tests

Refer to of *DEFINITY Communications System Generic 1 and Generic 3 Installation and Test*, 555-230-104, Issue 5, and perform the appropriate tests.

Register System as G3r V1.1 or G3r V2

Get the serial number of the G3r V1.1 or G3r V2, and call the INADS Database Administrator at the Technical Service Center (1-800-248-1111) to register the updated system as a G3r V1.1 or the upgraded system as a G3r V2.

Return Replaced Equipment

The G3r V1 equipment replaced, during the update to G3r V1.1 or the upgrade to G3r V2, should be returned to AT&T according to the requirements outlined in:

BCS/Material Logistics, MSL/Attended Stocking Locations

Methods and Procedures for Basic Material Returns

The replaced equipment includes the G3r V1 tape cartridges.

G3r V2 or V3 to G3r V4

9

This chapter provides the information necessary to perform:

- A maintenance update for a DEFINITY G3r V2 or V3 using a common G3r V2/V3 software load[1]
- An upgrade from a DEFINITY G3r V2 or V3 to a DEFINITY G3r V4 system

The software involved in the updates or upgrades and their procedures are also provided.

CAUTION:
Be careful to find the right chapter for your upgrade. Using the software- and sometimes the hardware-upgrade PEC on the customer's order, refer to Table 1 in "About This Document" for the correct chapter.

When necessary, this chapter should be used for the second stage of a G3r V1-to-G3r V4 upgrade.

NOTE:
If this chapter is being used as the second stage of a G3r V1-to-G3r V4 upgrade, refer to Chapter 8 of this book for information about a first stage of this upgrade, upgrading a G3r V1 to a G3r V2 or V3.

1. As a convention, this chapter refers to these maintenance updates as ''G3r V4 updates.''

The following processes are required for either a G3r V2 or V3 to G3r V4 PPN upgrade or maintenance update:

- Replacing the software tape
- Updating or upgrading the software

  This involves saving, loading, and (when necessary) reentering system translations.
- Testing the updated or upgraded system to verify proper operation

G3r V4 features and functions are listed in the *DEFINITY Communications System Generic 3 Feature Description*, 555-230-204. *DEFINITY Communication System Generic 3 V3 Implementation*, 555-230-655, provides the commands, procedures, and forms required to initialize and administer the G3r V4.

Considerations

Service Interruption

The G3r V4 update or upgrade process requires a non-call preserving service interruption which occurs during a reboot with the G3r V4 tapes. This service interruption (of about 15 to 20 minutes for a simplex system and about 5 minutes for a duplex system) must be closely coordinated with the customer and the local account team.

Changes to Run-Tape Compatible Update or Upgrade Procedures

The steps presented for a G3r V4 update or upgrade in the "System Updates and Upgrades" section of this chapter are subject to change. Although these steps are accurate for the G3r tape issue that is available on the manual's publication date, the specific steps for a run-tape compatible update or upgrade can change as new G3r tapes are issued. For the most current information, refer to the Quality Protection Plan Change Notice (QPPCN) Update Supplement provided with the new G3r V4 tape.

Usable Circuit-Pack Vintages

Every circuit pack used in the updated or upgraded G3r V4 system must conform to the minimum usable vintage requirements for that system. At a presale site inspection, the QPPCN process must check the vintages of every G3r V2 or V3 circuit pack that will be reused in the updated or upgraded G3r V4 and, if necessary, replace those circuit packs that have unusable vintages.

Refer to *Technical Monthly*, Reference Guide for Circuit-Pack Vintages and Change Notices, for current information about usable vintages in a G3r V4 system. For information about usable vintages of international circuit packs, refer to the ITAC's Tech Alert via your regional distributor.

Generic 3 — Management Applications (G3-MA)

As part of the QPPCN process, any G3-MAs being used to administer a G3 V4 system must be upgraded to at least an R1V3.1 prior to a G3 V4 upgrade. However, an R1V4.1 G3-MA is necessary for full compatibility with a G3 V4 system.

Call Management System (CMS)

Existing CMS adjuncts (not BCMS), being used to monitor call-center activity for a G3 V4 system with a G3V4 Call Center package, must be upgraded to CentreVu CMS R3V4 in conjunction with a G3 V4 upgrade.

Otherwise, the existing (R3V2) CMS is sufficient.

Software

Like the G3r V2 or V3, the G3r V4 software and translations are saved on the TN1656 Tape Drive circuit pack. Although the G3r V2 or V3 translations automatically update or upgrade to a G3r V4, several features require special attention because of form changes or potential naming conflicts in the process.

Between customer confirmation and the actual installation of an update or upgrade, the Software Specialist and Associate should check these forms to ensure that the updated or upgraded translations will be appropriate for the customer's needs. After the upgraded or updated system is rebooted, these translations can be entered either locally by the Software Associate or remotely at the FSAC (with possible assistance from the upgrade technician).

For information to make the required changes, refer to:

- *DEFINITY Communications System Generic 3 V2 to Generic 3 V4 Transition Reference*, 555-230-636
- *DEFINITY Communications System Generic 3 V3 Implementation*, 555-230-655

Circuit Packs

No new circuit packs are required for a basic G3r V4 system update or upgrade.

For G3 V3 systems, the new TN2181 circuit pack can provide 2-wire DCP connections to the switch. Each TN2181 supports up to 16 2-wire DCP stations including 84XX-series voice terminals and the 302B1 attendant console.

For a description of this circuit pack, refer to *DEFINITY Communications System Generic 3 V3 System Description*, 555-230-205.

NOTE:
If an upgraded G3r V4 system will have either more than 22 port networks or more than 2 switch nodes, an additional TN1650B Memory circuit pack will be required in each PPN control carrier. After finishing the basic upgrade described in this chapter, refer to Chapter 28 for information about the memory and port-network additions.

Software-Translation Update or Upgrade

Since the G3r V4 uses the same format and tape drive as the G3r V2 or V3, updating or upgrading the software to G3r V4 is a simple task. As a fall-back precaution, the current translations are saved to the existing G3r V2 or V3 tape. Then, the new G3r V4 tape replaces the G3r V2 or V3 tape, and the current translations are saved to the new G3r V4 tape. Next, the system is rebooted with the G3r V4 tape.

The instructions on how and when to do these operations are included in the "System Updates and Upgrades" section of this chapter.

System Updates and Upgrades

There are many configurations of DEFINITY G3r V2 and V3 in the field. In terms of both hardware and software, each system can have a unique configuration. However, updating or upgrading a G3r V2 and V3 PPN to a G3r V4 PPN requires no hardware changes.

If an upgraded G3r V4 system will have either more than 22 port networks or more than 2 switch nodes, an additional TN1650B Memory circuit pack is required in each PPN control carrier. After finishing the basic upgrade described in this chapter, refer to Chapter 28 for information about adding the memory.

If the upgrade involves adding a new cabinet, refer to *DEFINITY Communications System Generic 1 and Generic 3 Installation and Test*, 555-230-104, Issue 5, for the installation procedures.

Standard-Reliability G3r V2 or V3 to Standard-Reliability G3r V4

A standard-reliability G3r V2 or V3 is either:

- Updated to a standard-reliability G3r V4
- Upgraded to a standard-reliability G3r V4

by installing the G3r V4 tape, downloading the existing translations onto it, copying the tape's translations to disk, and rebooting from disk.

Prerequisite Hardware

The equipment in the following table *must* be on-site before the G3r V4 update or upgrade begins. Ensure that the new tapes are G3r V4 tapes.

Table 9-1. Required Hardware

Equipment	Description	Quantity
J58890TF L8	G3r V4 Tape	2 (Note)

NOTE:
For a maintenance update, acquired from the Technical Service Center. For an upgrade, shipped from the factory.

Required Tools

The following tools and items may be required during the update or upgrade:

- 1/4-inch flat-blade screwdriver
- One copy of each of the following manuals:
  - *DEFINITY Communications System Generic 3r V4 Maintenance*, 555-230-105, Issue 4
  - *DEFINITY Communications System Generic 3 V3 Implementation*, 555-230-655

Open PPN Cabinet's Door

Use a screwdriver, and turn the three door-latch screws clockwise one-fourth turn to open the door.

Verify System Status

Before proceeding, the system should be examined for alarms, and every possible problem should be corrected. Except for an unresolved alarm that may be the reason for a G3r V4 maintenance update, the system must be alarm-free.

Save Current Translations to G3r V2 or V3 Tape

As a fall-back precaution, the current G3r V2 or V3 translations should first be saved to the system tape.

1. Log in at the G3-MT or G3-MA terminal.
2. Enter **`change system-parameters maintenance`**, and press (RETURN). Use this form to prevent scheduled daily maintenance from interfering with the update or upgrade. (If scheduled maintenance *has* begun, set the value of the "Stop Time" field to one minute after the current time. If scheduled maintenance *has not* yet begun, change the value of the "Start Time" field to a time after the update or upgrade will be finished.)

   Also, use this form to change the "Save Translation" field to "no." This command will prevent the maintenance software from activating the disk.
3. Enter **`save translation`**, and press (RETURN). This command instructs the system to write all translation information from memory to the G3r V2 or V3 disk.
4. If the system is equipped with a TN750/B Announcement circuit pack, enter **`display announcements`**, and press (RETURN).

   If administered recorded announcements are listed, these announcements can be saved using the save announcements command. Enter **`save announcements`**, and press (RETURN).

5. Enter **`change system-parameters features`**, and press (RETURN). Use Page 2 of this form to prevent unexpected activation of the Terminal Translation Initialization (TTI) feature during the update or upgrade by changing the value in the ‘‘TTI Security Code’’ field.
6. See NOTE. Enter **`backup disk`**, and press (RETURN). This command instructs the system to backup the current information on disk to the G3r V2 or V3 system tape.

   NOTE:
   The ‘‘backup’’ command takes from 20 to 50 minutes to execute. Until this command is finished, the system provides no user feedback on the G3-MT or G3-MA screen. Therefore, be careful not to press (RETURN) once the command begins executing. Doing so will cause the G3-MT or G3-MA screen to clear as the command finishes — quickly erasing any success/failure messages that the system may provide.

Download Current Software and Translations to Disk and Reboot

1. Remove the G3r V2 or V3 system tape.
2. Clean the heads on the tape drive, install the G3r V4 tape, and wait for the tape to retension.
3. Enter **`list configuration software-versions`**, and press (RETURN). This command instructs the system to display the version number of the software load stored on the new tape. Verify that the new tape has the expected load.
4. See NOTE. If the system is equipped with a TN750/B Announcement circuit pack, the recorded announcements can be saved using the save announcements command. Enter **`copy announce tape`**, and press (RETURN). This command instructs the system to combine the announcements with the new software load. This command takes about 5 minutes to execute.

   NOTE:
   Until this command is finished, the system provides no user feedback on the G3-MT or G3-MA screen. Therefore, be careful not to press (RETURN) once the command begins executing. Doing so will cause the G3-MT or G3-MA screen to clear as the command finishes — quickly erasing any success/failure messages that the system may provide.

5. Enter **`save translation tape`**, and press (RETURN). This command instructs the system to combine the customer’s translations with the new software load. This command takes about 15 minutes to execute.

6. See NOTE. Enter **`restore disk full`**, and press (RETURN). This command instructs the system to copy the entire tape to disk. This command takes about 30 minutes to execute.

   NOTE:
   Until this command is finished, the system provides no user feedback on the G3-MT or G3-MA screen. Therefore, be careful not to press (RETURN) once the command begins executing. Doing so will cause the G3-MT or G3-MA screen to clear as the command finishes — quickly erasing any success/failure messages that the system may provide.

7. Enter **`upgrade software xx.xx`** `(entire alphanumeric string of target software version)`, and press (RETURN). This command instructs the system to:

   - Lock out access of other administration terminals to the system
   - Save current G3r V4 translations to disk
   - Load system software and translations from the disk to memory

   This process takes about 15 minutes to execute.

   For an update or upgrade to a standard-reliability G3r V4, the ''upgrade software'' command is *not* call preserving.

8. Log in as ''craft'' at the `login:` prompt on the G3-MT or G3-MA.

Set the Core-Dump Vector

Enter **`set vector 8`**, and press (RETURN). Use this form to assign the core dump vector so that fault information will be available in the event of a system failure.

Administer the Updated or Upgraded System

1. Enter **`change system-parameters maintenance`**, and press (RETURN). Use this form to change the ''Start Time,'' ''Stop Time,'' and ''Save Translation'' fields back to their previous values before the upgrade.
2. Enter **`change system-parameters features`**, and press (RETURN). Use this form to change the ''TTI Security Code'' field back to its previous value before the upgrade.

3. For a G3r V4 upgrade only, get the DOSS order number of the upgrade, and call the regional CSA to request an ‘‘init’’ login. Once logged in as ‘‘init,’’ the CSA should assign the G3 V4 option, which also automatically sets 24-hour password aging for the upgraded system’s customer logins.

   The CSA should enter **`change system-parameters customer-options`**, and press RETURN to enable the G3 V4 option. For details on enabling this option, see the following figures and *DEFINITY Communications System Generic 3 V4 Implementation*, 555-230-655.

   NOTE:
   Certain forms have changed for G3r V4. Updated or upgraded G3r V4 translations may appear on a different form, fields may have shifted within a form, and/or the names assigned to particular fields may have changed. Refer to:

   - Quality Protection Plan Change Notice (QPPCN) Update Supplement, if provided
   - *DEFINITY Communications System Generic 3 V2 to Generic 3 V4 Transition Reference*, 555-230-636
   - *DEFINITY Communications System Generic 3 V4 Implementation*, 555-230-655

   NOTE:
   and make the necessary changes.

```
change system-parameters customer-options                       Page   1 of   3
                                OPTIONAL FEATURES

                                  G3 Version: V4

                         Logged-In ACD Agents:___

    Abbreviated Dialing Enhanced List? n       BCMS/VuStats Service Level? n
 A/D Grp/Sys List Dialing Start at 01? n                  Call Work Codes? n
                                 ACD? n                       CAS Branch? n
                   AT&T Adjunct Links? n                        CAS Main? n
Answer Supervision by Call Classifier? n                      DCS (Basic)? n
                                 ARS? n                 DCS Call Coverage? n
                 ARS/AAR Partitioning? y    DTMF Feedback Signals For VRU? n
                       ASAI Interface? n    Emergency Access to Attendant? y
                                 ATMS? n _   Expert Agent Selection (EAS)? n
              Audible Message Waiting? n      External Device Alarm Admin? n
                  Authorization Codes? n                  Flexible Billing? n
                           BCMS (Basic)? y    Forced Entry of Account Codes? y
                 BCMS/VuStats LoginIDs? n              Hospitality (Basic)? n


        (NOTE: You must logoff & login to effect the permission changes.)
```

Screen 9-1. Sample Display of System-Parameters Customer-Options Form — Page 1

```
change system-parameters customer-options                       Page   2 of   3
                                OPTIONAL FEATURES

        G3V4 Hospitality Enhancements? y   Service Observing (Remote/By FAC)? y
      Hospitality Parameter Reduction? n            Service Observing (VDNs)? n
                             ISDN-PRI? n               Station and Trunk MSP? n
                  ISDN-PRI over PACCON? n                 Tenant Partitioning? n
                   Lookahead Interflow? n         Terminal Trans. Init. (TTI)? y
                  Malicious Call Trace? n                 Time of Day Routing? y
             Multifrequency Signaling? n                   Vectoring (Basic)? n
               Multiple Call Handling? y                Uniform Dialing Plan? n
    PASTE (Display PBX Data on Phone)? n               Vectoring (Prompting)? n
                                                     Vectoring (G3V4 Enhanced)? n
             Premier Business Package? n   Vectoring (ANI/II-Digits Routing)? n
             Processor and System MSP? n   Vectoring (G3V4 Advanced Routing)? n
                   Private Networking? y          VDN of Origin Announcement? y
                                                      VDN Return Destination? n
        Restrict Call Forward Off Net? n      Voice Mail Application Support? n
                Secondary Data Module? n                             VuStats? y
            Service Observing (Basic)? y                 Wideband Switching? n

        (NOTE: You must logoff & login to effect the permission changes.)
```

Screen 9-2. Sample Display of System-Parameters Customer-Options Form — Page 2

```
change system-parameters customer-options                       Page   3 of   3
                             ASAI CAPABILITY GROUPS

                 Adjunct Call Control Group? y
                      Adjunct Routing Group? y
                Answering Machine Detection? y
                       Domain Control Group? y
                   Event Notification Group? y
                   Internally Measured Data? y
                      Request Feature Group? y
                            Set Value Group? y
 Switch Classified Calls/Predictive Dialing? y

        (NOTE: You must logoff & login to effect the permission changes.)
```

Screen 9-3. Sample Display of System-Parameters Customer-Options Form — Page 3

4. Explain to the switch administrator that any previous login names and passwords still exist, but that the passwords will expire in 24 hours. When changed, the new login names and passwords must conform to the requirements shown in the following note.

   NOTE:
   For G3 V4, a password must have from 4 to 11 symbols including at least 1 alphabetic character and 1 numeric character. As before, a login name must have from 3 to 6 alphanumeric characters.

   Also, explain that, since an R1V3.0 G3-MA cannot notify users about expiring passwords, password aging should be disabled for any login name used with an R1V3.0 G3-MA.

```
change password craft                                          Page   1 of   1
                        PASSWORD ADMINISTRATION

   Password of Login Making Change:

   LOGIN BEING CHANGED
                        Login Name: craft

   LOGIN'S PASSWORD INFORMATION
                  Login's Password:
          Reenter Login's Password:
```

Screen 9-4. Sample Change-Password Form

Save New Translations to Disk and Back Up Translations to Tape

1. Enter **`save translation`**, and press (RETURN). This command instructs the system to write the changed "Save Translation" field and, if assigned, the G3 V4 option from memory to the G3r V4 disk.
2. See NOTE. Enter **`backup disk`**, and press (RETURN). This command instructs the system to backup the current information on disk to the G3r V4 system tape.

   NOTE:
   The "backup" command takes from 20 to 50 minutes to execute. Until this command is finished, the system provides no user feedback on the G3-MT or G3-MA screen. Therefore, be careful not to press (RETURN) once the command begins executing. Doing so will cause the G3-MT or G3-MA screen to clear as the command finishes — quickly erasing any success/failure messages that the system may provide.

Verify Success of the Update or Upgrade

1. Enter **`test stored-data long`**, and press (RETURN). This command instructs the system to verify the consistency of the MSS files (on the disk and tape).
2. Enter **`list configuration software-versions`**, and press (RETURN). Make final verification that the software in memory and on the disk has the expected load.

Back Up Translations to Spare Tape and Test

1. Remove the G3r V4 system tape.
2. Install the spare G3r V4 tape, and wait for the tape to retension.
3. See NOTE. Enter **`backup disk`**, and press (RETURN). This command instructs the system to backup the current information on disk to the spare G3r V4 tape.

   NOTE:
   The ''backup'' command takes from 20 to 50 minutes to execute. Until this command is finished, the system provides no user feedback on the G3-MT or G3-MA screen. Therefore, be careful not to press (RETURN) once the command begins executing. Doing so will cause the G3-MT or G3-MA screen to clear as the command finishes — quickly erasing any success/failure messages that the system may provide.

4. Enter **`test stored-data long`**, and press (RETURN). This command instructs the system to verify the consistency of the MSS files (on the disk and tape).

Close Cabinet Door

Close the front door and secure with the three latches.

Run Acceptance Tests

Refer to Chapter 11 of *DEFINITY Communications System Generic 1 and Generic 3 Installation and Test*, 555-230-104, Issue 5, and perform the appropriate tests.

Register System as G3r V4

For a G3r V4 upgrade, get the system's serial number, and call the INADS Database Administrator at the Technical Service Center (1-800-248-1111) to register the upgraded system as a G3r V4.

Return Replaced Equipment

The G3r V2 or V3 equipment replaced, during the update or upgrade to G3r V4, should be returned to AT&T according to the requirements outlined in:

BCS/Material Logistics, MSL/Attended Stocking Locations

Methods and Procedures for Basic Material Returns

The replaced equipment includes the G3r V2 or V3 tape cartridges.

High- or Critical-Reliability G3r V2 or V3 to High- or Critical-Reliability G3r V4

A high- or critical-reliability G3r V2 or V3 is either:

- Updated to a high- or critical-reliability G3r V4
- Upgraded to a high- or critical-reliability G3r V4

by installing the G3r V4 tapes, downloading the existing translations onto them, copying the tapes' translations to disks, and rebooting from the disks.

Prerequisite Hardware

The equipment in the following table *must* be on-site before the G3r V4 update or upgrade begins. Ensure that the new tapes are or G3r V4 tapes.

Table 9-2. Required Hardware

Equipment	Description	Quantity
J58890TF L8	G3r V4 Tape	4 (Note)

NOTE:
For a maintenance update, acquired from the Technical Service Center. For an upgrade, shipped from the factory.

Required Tools

The following tools and items may be required during the update or upgrade:

- Flat-blade screwdriver
- One copy of each of the following manuals:
  - *DEFINITY Communications System Generic 3r V4 Maintenance*, 555-230-105, Issue 4
  - *DEFINITY Communications System Generic 3 V3 Implementation*, 555-230-655

Open PPN Cabinet's Door

Use a screwdriver, and turn the three door-latch screws clockwise one-fourth turn to open the door.

Verify System Status

Before proceeding, the system should be examined for alarms, and every possible problem should be corrected. Except for an unresolved alarm that may be the reason for a G3r V4 maintenance update, the system must be alarm-free.

Save Current Translations to G3r V2 or V3 Tapes

As a fall-back precaution, the current G3r V2 or V3 translations should first be saved to the system tapes.

1. Log in at the G3-MT or G3-MA terminal.
2. Enter **`change system-parameters maintenance`**, and press (RETURN). Use this form to prevent scheduled daily maintenance from interfering with the update or upgrade. (If scheduled maintenance *has* begun, set the value of the "Stop Time" field to one minute after the current time. If scheduled maintenance *has not* yet begun, change the value of the "Start Time" field to a time after the update or upgrade will be finished.)

   Also, use this form to change the "SPE Interchange" field to "no." This command will prevent the active and standby SPEs from unexpectedly reversing roles during the update or upgrade.

   Also, use this form to change the "Save Translation" field to "no." This command will prevent the maintenance software from activating the disk.
3. Enter **`status spe`**, and press (RETURN) to verify that the standby SPE is refreshed and that the standby disk is in service.
4. Enter **`save translation both`**, and press (RETURN). This command instructs the system to write all translation information from memory to the G3r V2 or V3 disks.

5. If the system is equipped with a TN750/B Announcement circuit pack, enter **`display announcements`**, and press (RETURN).

   If administered recorded announcements are listed, these announcements can be saved using the save announcements command. Enter **`save announcements`**, and press (RETURN).

6. Enter **`change system-parameters features`**, and press (RETURN). Use Page 2 of this form to prevent unexpected activation of the Terminal Translation Initialization (TTI) feature during the update or upgrade by changing the value in the ‘‘TTI Security Code’’ field.

7. See NOTE. Enter **`backup disk`**, and press (RETURN). This command instructs the system to backup the current information on disk to the G3r V2 or V3 system tapes.

   NOTE:
   The ‘‘backup’’ command takes from 25 to 50 minutes to execute. Until this command is finished, the system provides no user feedback on the G3-MT or G3-MA screen. Therefore, be careful not to press (RETURN) once the command begins executing. Doing so will cause the G3-MT or G3-MA screen to clear as the command finishes — quickly erasing any success/failure messages that the system may provide.

Download Current Software and Translations to Disk and Reboot

1. Remove the G3r V2 or V3 system tapes.

2. Clean the heads on the tape drives, install the G3r V4 tapes, and wait for the tapes to retension.

3. Enter **`list configuration software-versions long`**, and press (RETURN). This command instructs the system to display the version number of the software load stored on the new tapes. Verify that the new tapes have the expected load.

4. See NOTE. If the system is equipped with a TN750/B Announcement circuit pack, the recorded announcements can be saved using the save announcements command. Enter **`copy announce spe-b tape`**, and press (RETURN). This command instructs the system to combine the announcements with the new software load. This command takes about 5 minutes to execute.

   NOTE:
   Until this command is finished, the system provides no user feedback on the G3-MT or G3-MA screen. Therefore, be careful not to press (RETURN) once the command begins executing. Doing so will cause the G3-MT or G3-MA screen to clear as the command finishes — quickly erasing any success/failure messages that the system may provide.

5. See previous NOTE. If the system is equipped with a TN750/B Announcement circuit pack, the recorded announcements can be saved using the save announcements command. Enter **`copy announce spe-a tape`**, and press (RETURN). This command instructs the system to combine the announcements with the new software load. This command takes about 5 minutes to execute.
6. Enter **`save translation tape`**, and press (RETURN). This command instructs the system to combine the customer's translations with the new software load. This command takes about 15 minutes to execute.
7. See NOTE. Enter **`restore disk full both`**, and press (RETURN). For both SPEs, this command instructs the system to copy the entire tape to disk. This command takes about 30 minutes to execute.

   NOTE:
   Until this command is finished, the system provides no user feedback on the G3-MT or G3-MA screen. Therefore, be careful not to press (RETURN) once the command begins executing. Doing so will cause the G3-MT or G3-MA screen to clear as the command finishes — quickly erasing any success/failure messages that the system may provide.

8. Enter **`upgrade software xx.xx`** `(entire alphanumeric string of target software version) call-override`, and press (RETURN). This command instructs the system to:
   - Lock out access of other administration terminals to the system
   - Save current G3r V4 translations to the disks
   - Load system software and translations from the disks to memory
   - Interchange the new software load

   This process takes about 15 minutes to execute.

   For an update or upgrade to a high- or critical-reliability G3r, the ''upgrade software'' command modified by the ''call-override'' object is *not* call preserving. (The service outage is about 2 minutes)
9. Log in as ''craft'' at the `login:` prompt on the G3-MT or G3-MA.

Verify State of Health of the SPEs

1. Enter **`status spe`**, and press (RETURN) to verify that the active SPE is fully functional.
2. Enter **`reset spe-standby 4`**, and press (RETURN) to get the new load running on the standby SPE.
3. Enter **`status spe`**, and press (RETURN). Repeat this command until memory shadowing is up to date (standby refreshed) and until both SPEs are fully functional.

Set the Core-Dump Vector

Enter **`set vector f spe-maint`**, and press (RETURN). Use this form to assign the core dump vector so that fault information will be available in the event of a system failure.

Administer the Updated or Upgraded System

1. Enter **`change system-parameters maintenance`**, and press (RETURN). Use this form to change the "Start Time," "Stop Time," "SPE Interchange," and "Save Translation" fields back to their previous values before the upgrade.
2. Enter **`change system-parameters features`**, and press (RETURN). Use this form to change the "TTI Security Code" field back to its previous value before the upgrade.
3. For a G3r V4 upgrade only, get the DOSS order number of the upgrade, and call the regional CSA to request an "init" login. Once logged in as "init," the CSA should assign the G3 V4 option, which also automatically sets 24-hour password aging for the upgraded system's customer logins.

   The CSA should enter **`change system-parameters customer-options`**, and press (RETURN) to enable the G3 V4 option. For details on enabling this option, see the following figures and *DEFINITY Communications System Generic 3 V3 Implementation*, 555-230-655.

   NOTE:
   Certain forms have changed for G3r V4. Updated or upgraded G3r V4 translations may appear on a different form, fields may have shifted within a form, and/or the names assigned to particular fields may have changed. Refer to:

   - Quality Protection Plan Change Notice (QPPCN) Update Supplement, if provided
   - *DEFINITY Communications System Generic 3 V2 to Generic 3 V4 Transition Reference*, 555-230-636
   - *DEFINITY Communications System Generic 3 V3 Implementation*, 555-230-655

..

```
change system-parameters customer-options                       Page   1 of   3
                                OPTIONAL FEATURES

                                  G3 Version: V4

                        Logged-In ACD Agents:___

    Abbreviated Dialing Enhanced List? n       BCMS/VuStats Service Level? n
 A/D Grp/Sys List Dialing Start at 01? n                  Call Work Codes? n
                                 ACD? n                       CAS Branch? n
                  AT&T Adjunct Links? n                         CAS Main? n
Answer Supervision by Call Classifier? n                      DCS (Basic)? n
                                 ARS? n                 DCS Call Coverage? n
                 ARS/AAR Partitioning? y    DTMF Feedback Signals For VRU? n
                       ASAI Interface? n    Emergency Access to Attendant? y
                                 ATMS? n _   Expert Agent Selection (EAS)? n
              Audible Message Waiting? n      External Device Alarm Admin? n
                  Authorization Codes? n                 Flexible Billing? n
                          BCMS (Basic)? y    Forced Entry of Account Codes? y
                BCMS/VuStats LoginIDs? n              Hospitality (Basic)? n


        (NOTE: You must logoff & login to effect the permission changes.)
```

Screen 9-5. Sample Display of System-Parameters Customer-Options Form — Page 1

```
change system-parameters customer-options                       Page   2 of   3
                                OPTIONAL FEATURES

        G3V4 Hospitality Enhancements? y   Service Observing (Remote/By FAC)? y
      Hospitality Parameter Reduction? n            Service Observing (VDNs)? n
                             ISDN-PRI? n               Station and Trunk MSP? n
                 ISDN-PRI over PACCON? n                 Tenant Partitioning? n
                  Lookahead Interflow? n         Terminal Trans. Init. (TTI)? y
                 Malicious Call Trace? n                 Time of Day Routing? y
             Multifrequency Signaling? n                   Vectoring (Basic)? n
               Multiple Call Handling? y                Uniform Dialing Plan? n
    PASTE (Display PBX Data on Phone)? n               Vectoring (Prompting)? n
                                                     Vectoring (G3V4 Enhanced)? n
             Premier Business Package? n   Vectoring (ANI/II-Digits Routing)? n
             Processor and System MSP? n   Vectoring (G3V4 Advanced Routing)? n
                   Private Networking? y          VDN of Origin Announcement? y
                                                      VDN Return Destination? n
        Restrict Call Forward Off Net? n      Voice Mail Application Support? n
                Secondary Data Module? n                              VuStats? y
            Service Observing (Basic)? y_                 Wideband Switching? n

        (NOTE: You must logoff & login to effect the permission changes.)
```

Screen 9-6. Sample Display of System-Parameters Customer-Options Form — Page 2

```
change system-parameters customer-options                       Page   3 of   3
                            ASAI CAPABILITY GROUPS

                 Adjunct Call Control Group? y
                      Adjunct Routing Group? y
                Answering Machine Detection? y
                       Domain Control Group? y
                   Event Notification Group? y
                   Internally Measured Data? y
                      Request Feature Group? y
                            Set Value Group? y
 Switch Classified Calls/Predictive Dialing? y

        (NOTE: You must logoff & login to effect the permission changes.)
```

Screen 9-7. Sample Display of System-Parameters Customer-Options Form — Page 3

Explain to the switch administrator that any previous login names and passwords still exist, but that the passwords will expire in 24 hours. When changed, the new login names and passwords must conform to the requirements shown in the following note.

NOTE:
For G3 V4, a password must have from 4 to 11 symbols including at least 1 alphabetic character and 1 numeric character. As before, a login name must have from 3 to 6 alphanumeric characters.

Also, explain that, since an R1V3.0 G3-MA cannot notify users about expiring passwords, password aging should be disabled for any login name used with an R1V3.0 G3-MA.

```
change password craft                                           Page   1 of   1
                        PASSWORD ADMINISTRATION

   Password of Login Making Change:

   LOGIN BEING CHANGED
                        Login Name: craft

   LOGIN'S PASSWORD INFORMATION
                  Login's Password:
          Reenter Login's Password:
```

Screen 9-8. Sample Change-Password Form

Save New Translations to Disk and Back Up Translations to Tape

1. Enter **`status spe`**, and press (RETURN) to verify that the standby SPE is refreshed and that the standby disk is in service.
2. Enter **`save translation both`**, and press (RETURN). This command instructs the system to write the changed ''Save Translation'' field and, if assigned, the G3 V4 option from memory to the G3r V4 disks.
3. See NOTE. Enter **`backup disk`**, and press (RETURN). This command instructs the system to backup the current information on disk to the G3r V4 system tapes.

   NOTE:
   The ''backup'' command takes from 20 to 50 minutes to execute. Until this command is finished, the system provides no user feedback.

Verify Success of the Update or Upgrade

1. Enter **`test stored-data long`**, and press (RETURN). This command instructs the system to verify the consistency of the MSS files (on the disks and tapes).
2. Enter **`list configuration software-versions long`**, and press (RETURN). Make final verification that the software in memory and on both disks has the expected load.

Back Up Translations to Spare Tapes and Test

1. Remove the G3r V4 system tapes.
2. Install the spare G3r V4 tapes, and wait for the tapes to retension.
3. See NOTE. Enter **`backup disk`**, and press (RETURN). This command instructs the system to backup the current information on disk to the spare G3r V4 tapes.

   NOTE:
   The ''backup'' command takes from 20 to 50 minutes to execute. Until this command is finished, the system provides no user feedback on the G3-MT or G3-MA screen. Therefore, be careful not to press (RETURN) once the command begins executing. Doing so will cause the G3-MT or G3-MA screen to clear as the command finishes — quickly erasing any success/failure messages that the system may provide.

4. Enter **`test stored-data long`**, and press (RETURN). This command instructs the system to verify the consistency of the MSS files (on the disks and tapes).

Close Cabinet Door

Close the front door and secure with the three latches.

Run Acceptance Tests

Refer to Chapter 11 of *DEFINITY Communications System Generic 1 and Generic 3 Installation and Test*, 555-230-104, Issue 5, and perform the appropriate tests.

Register System as G3r V4

Get the serial number of the G3r V4, and call the INADS Database Administrator at the Technical Service Center (1-800-248-1111) to register the updated or upgraded system as a G3r V4.

Return Replaced Equipment

The G3r V2 or V3 equipment replaced, during the update or upgrade to G3r V4, should be returned to AT&T according to the requirements outlined in:

BCS/Material Logistics, MSL/Attended Stocking Locations

Methods and Procedures for Basic Material Returns

The replaced equipment includes the G3r V2 or V3 tape cartridges.

G3r Additions

10

This chapter describes the procedures required to install additional features or equipment to an existing DEFINITY® G3r V4 system.

All testing and trouble clearing must be done as specified in *DEFINITY® Communications System Generic 3r V4 Maintenance*, 555-230-105, Issue 4.

The commands and procedures required to administer the system are provided in *DEFINITY Communications System Generic 3 V4 Implementation*, 555-230-655.

1. Add Single-Carrier Cabinet EPN

Refer to ‘‘Install Expansion Port Network for Single-Carrier Cabinet’’ in *DEFINITY. Communications System Generic 1 and Generic 3 Installation and Test*, 555-230-104, Issue 5, for instructions on installing the EPN.

2. Add Multicarrier Cabinet EPN

Refer to ‘‘Install Multicarrier Cabinet Expansion Port Network’’ *DEFINITY Communications System Generic 1 and Generic 3 Installation and Test*, 555-230-104, Issue 5, for instructions on installing the EPN.

3. Split MCC G3r EPN into Two EPNs

Service Interruption

Since splitting an EPN requires a service interruption, notify the customer in advance as to when the addition will be carried out.

The software requires that this be done off-site to change the cabinet into two port networks. All port assignments are removed before the cabinet can be changed, then the ports are re-assigned.

Verify System Status

Before proceeding, the system should be examined for alarms, and every problem should be corrected. The system must be alarm-free.

Save Translations

1. Log in at the G3-MT terminal.
2. If the system is high- or critical-reliability, enter **`status spe`**, and press (RETURN) to verify that the standby SPE is refreshed and that the standby disk is in service.
3. Enter **`save translation [spe-a or both] disk`**, and press (RETURN). This command instructs the system to take all translation information in memory and write it to the disk(s).
4. If the MCC EPN contains a TN750/B Announcement circuit pack, enter **`display announcements`**, and press (RETURN).

   If administered recorded announcements are listed, enter **`list configuration software-version`**, press (RETURN). Check Page 2 of this form to find out when the announcements were last saved, and ask the customer whether any announcements have changed since then.

   If so, the current announcements can be saved using the save announcements command. Enter **`save announcements disk`**, and press (RETURN).
5. Enter **`backup disk [spe-a or both]`** and press (RETURN). This command instructs the system to backup the current information on disk to the system tape(s).
6. Update backup tape(s), if required.

Shut Down DEFINITY AUDIX System

1. See WARNING. If a DEFINITY AUDIX System resides in the MCC EPN to be upgraded, shut down the AUDIX assembly and allow the disk to completely spin down.

   WARNING:
   Neglecting to shut down an AUDIX assembly before powering down the system cabinet where it resides can damage the AUDIX disk.

2. See WARNING. To avoid an unexpected AUDIX reboot after an unplanned switch reboot, unseat the AUDIX assembly from its backplane connectors.

   WARNING:
   Before inserting or removing a circuit pack from a cabinet, put on a wrist strap and attach its plug or clip to the cabinet's frame.

Power Down Multicarrier EPN

At the MCC EPN's power-distribution unit, set the main circuit breaker to OFF.

Remove TDM/LAN Cable and Install Terminators

1. See CAUTION and NOTE. Remove the TDM/LAN cable (WP-91716 L7) from between the ''A'' and ''D'' carriers (See Figure 10-1, Figure 10-2, or Figure 10-3).

   CAUTION:
   When removing the TDM/LAN cables from an upgraded R1V3 carrier, be careful that none of the short pieces of shrink tubing come off the four corner pins of the pin-field block. Otherwise, when the new equipment is connected, -48 volts could short to ground.

   NOTE:
   Note the position of each connector before disconnecting the TDM/LAN cable.

2. Install the two new ZAHF4 TDM/LAN bus terminators at the pin-field blocks where the ends of the TDM/LAN cable were connected (See Figure 10-1, Figure 10-2, or Figure 10-3).

Reseat DEFINITY AUDIX System

See WARNING. If a DEFINITY AUDIX System resides in the MCC EPN, reseat the AUDIX assembly to its backplane connectors.

WARNING:
Before inserting or removing a circuit pack from a cabinet, put on a wrist strap and attach its plug or clip to the cabinet's frame.

Power Up Multicarrier EPN

At the MCC EPN's power-distribution unit, set the main circuit breaker to ON.

Install Expansion Interface Circuit Packs

1. Install one or two TN570 Expansion Interface circuit packs in the new EPN (See Figure 10-4, Figure 10-6, or Figure 10-8).
2. Interconnect the new EPN to the system (See Figure 10-4 to Figure 10-9).

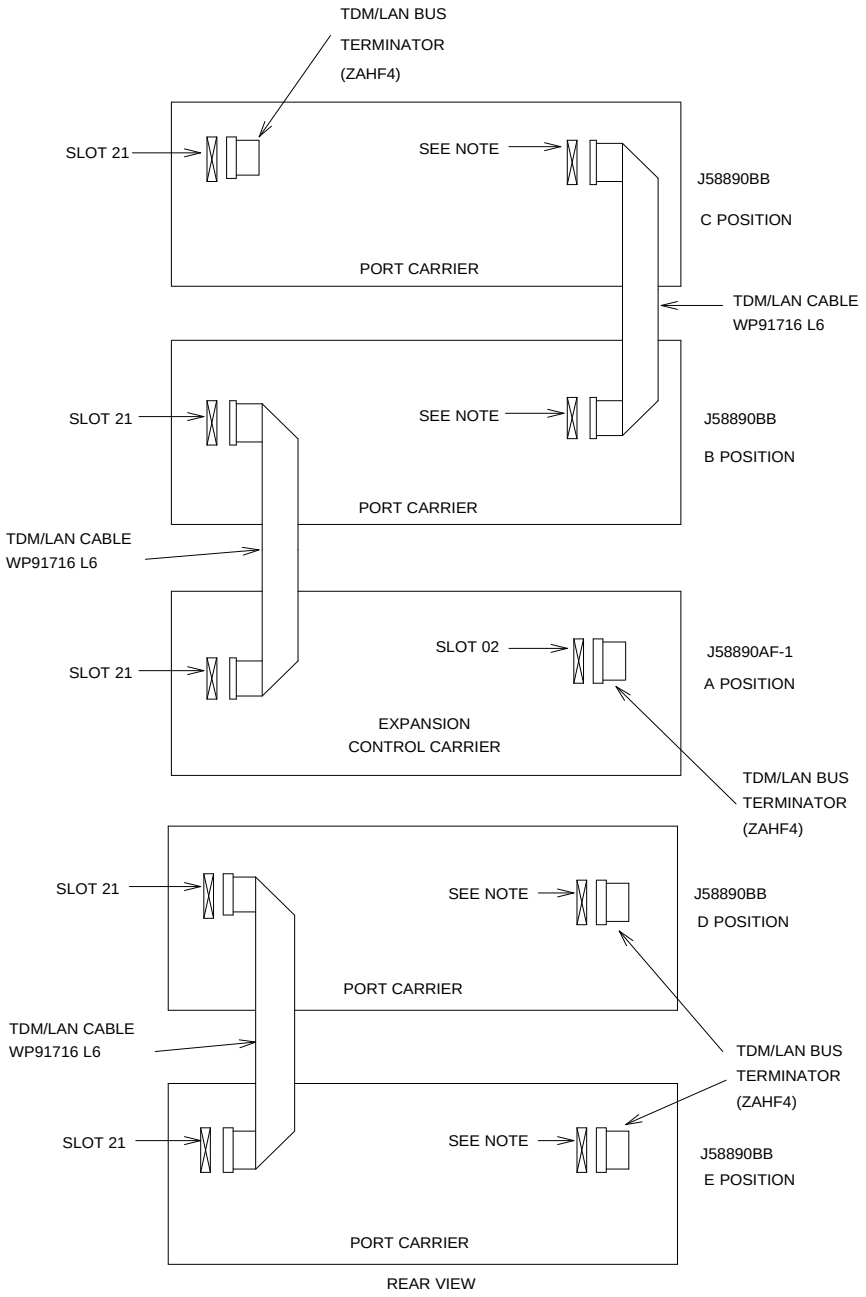

NOTE:
ON PORT CARRIER J58890BB-1, CONNECT THE TDM/LAN CABLE OR TDM/LAN BUS TERMINATOR TO SLOT 02. ON PORT CARRIERS J58890BB-2 AND -3, CONNECT THE TDM/LAN CABLE TO SLOT 01.

Figure 10-1. TDM/LAN Connections for Typical Multicarrier EPN

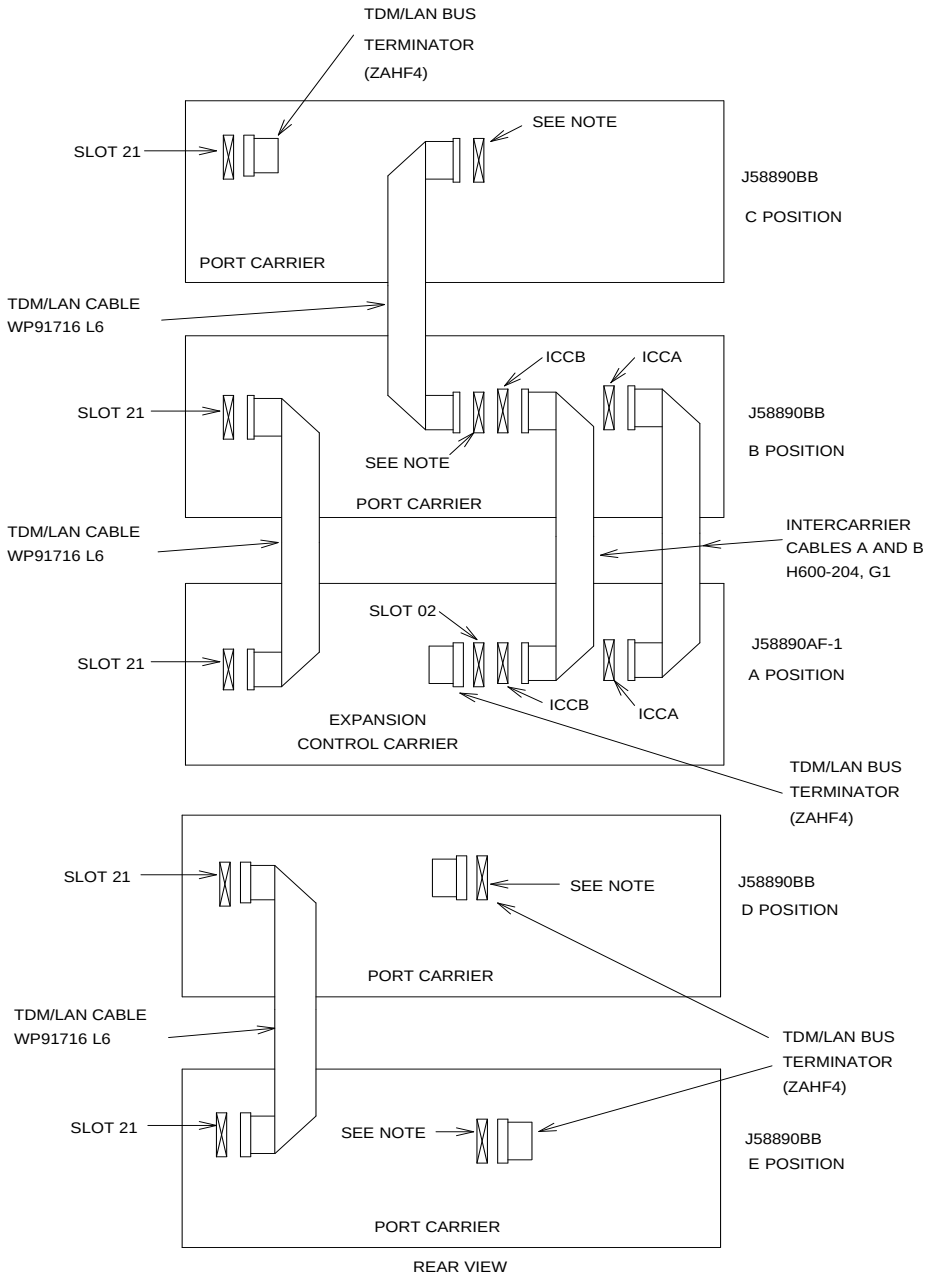

NOTE:
ON PORT CARRIER J58890BB-1, CONNECT THE TDM/LAN CABLE OR TDM/LAN BUS TERMINATOR TO SLOT 02. ON PORT CARRIERS J58890BB-2 AND -3, CONNECT THE TDM/LAN CABLE OR TDM/LAN BUS TERMINATOR TO SLOT 01.

Figure 10-2. Critical-Reliability TDM/LAN Connections for Typical Multicarrier EPN

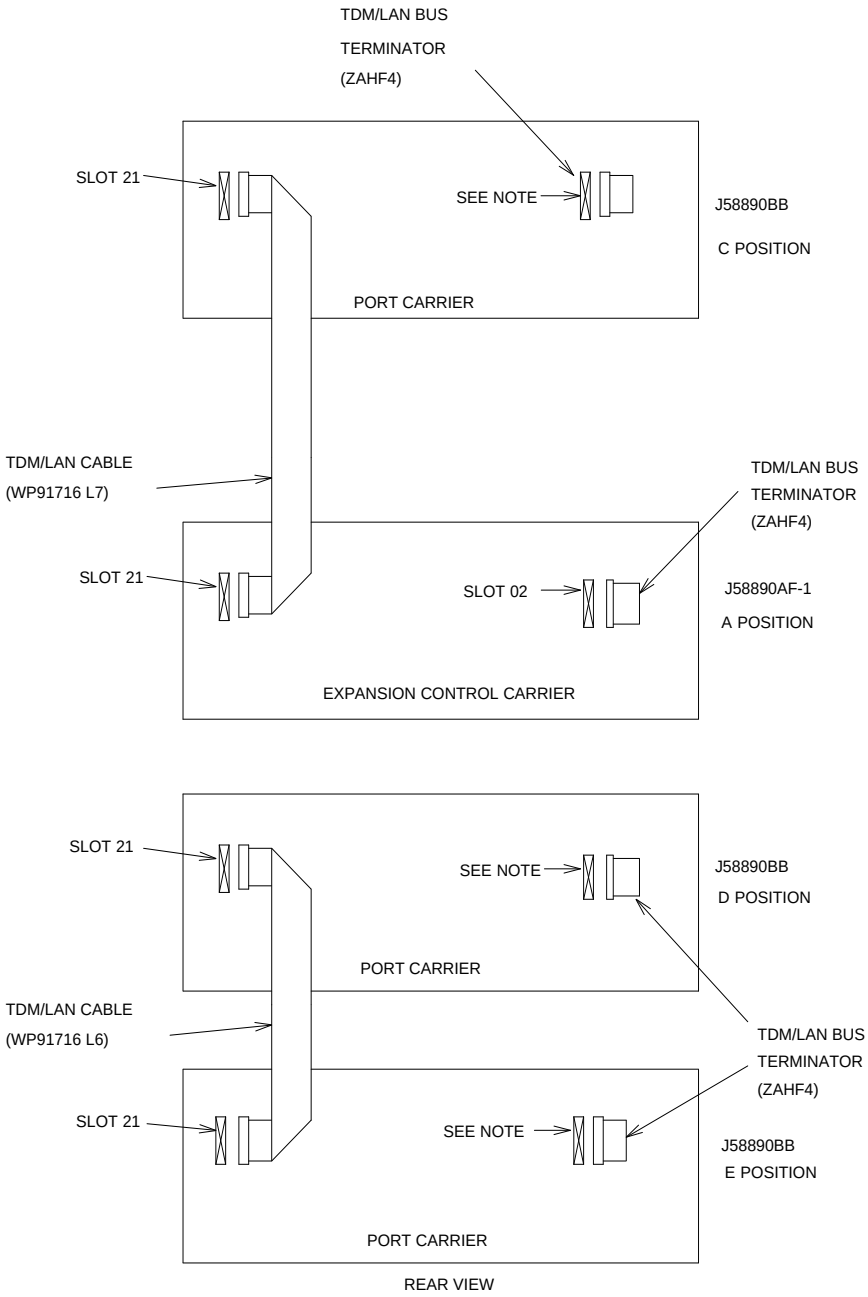

NOTE:

ON PORT CARRIER J58890BB-1, CONNECT THE TDM/LAN CABLE OR TDM/LAN TERMINATOR TO SLOT 02. ON PORT CARRIERS J58890BB-2 AND -3, CONNECT THE TDM/LAN CABLES TO SLOT 01.

Figure 10-3. TDM/LAN Connections for Typical Upgraded G2 Universal Module

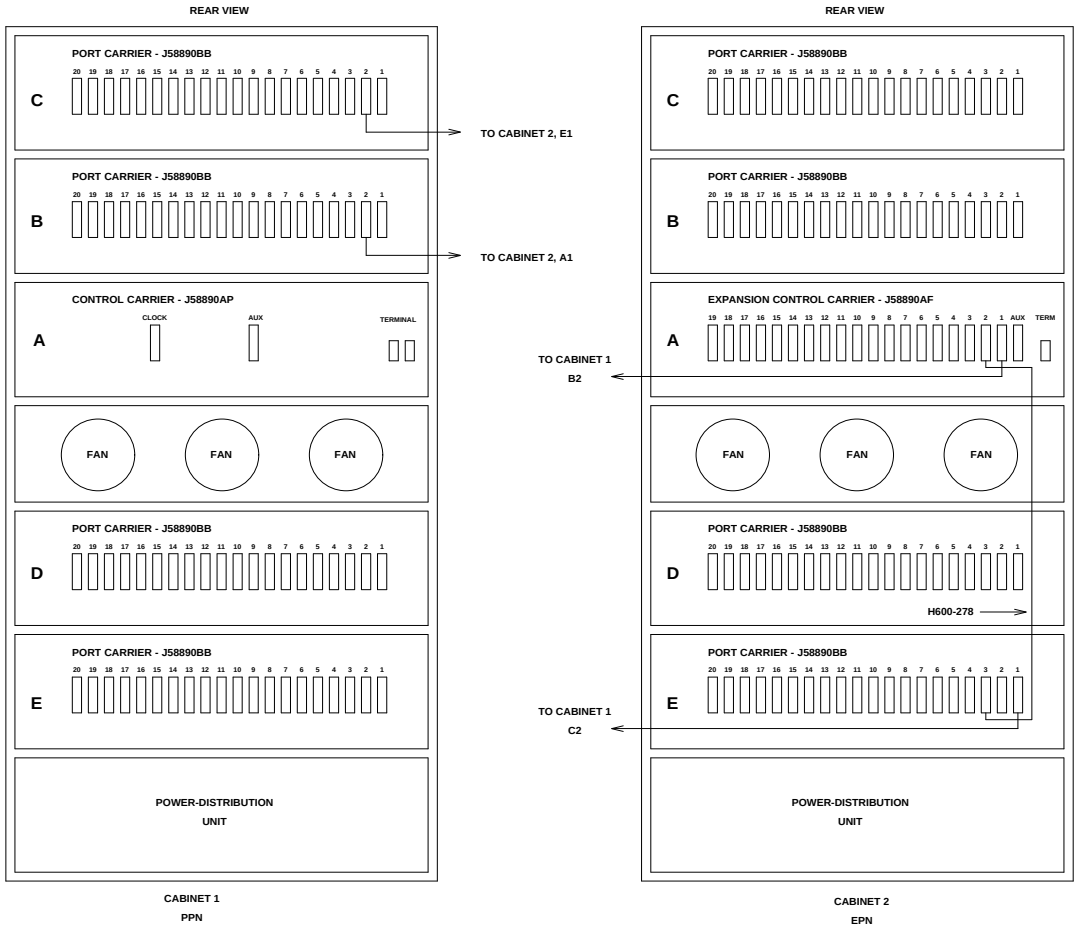

Figure 10-4. Standard-Reliability G3r with Three Port Networks

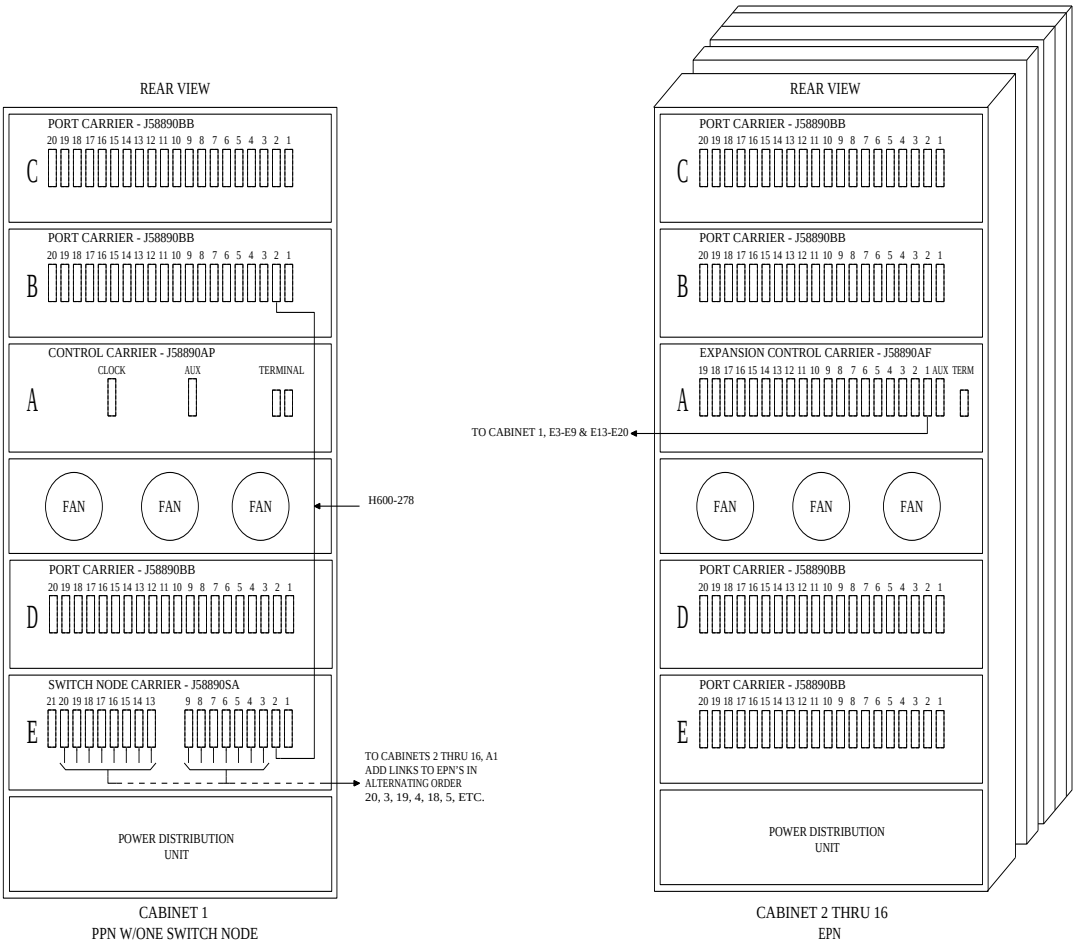

Figure 10-5. Standard-Reliability Fiber-Optic Connections through Center Stage Switch

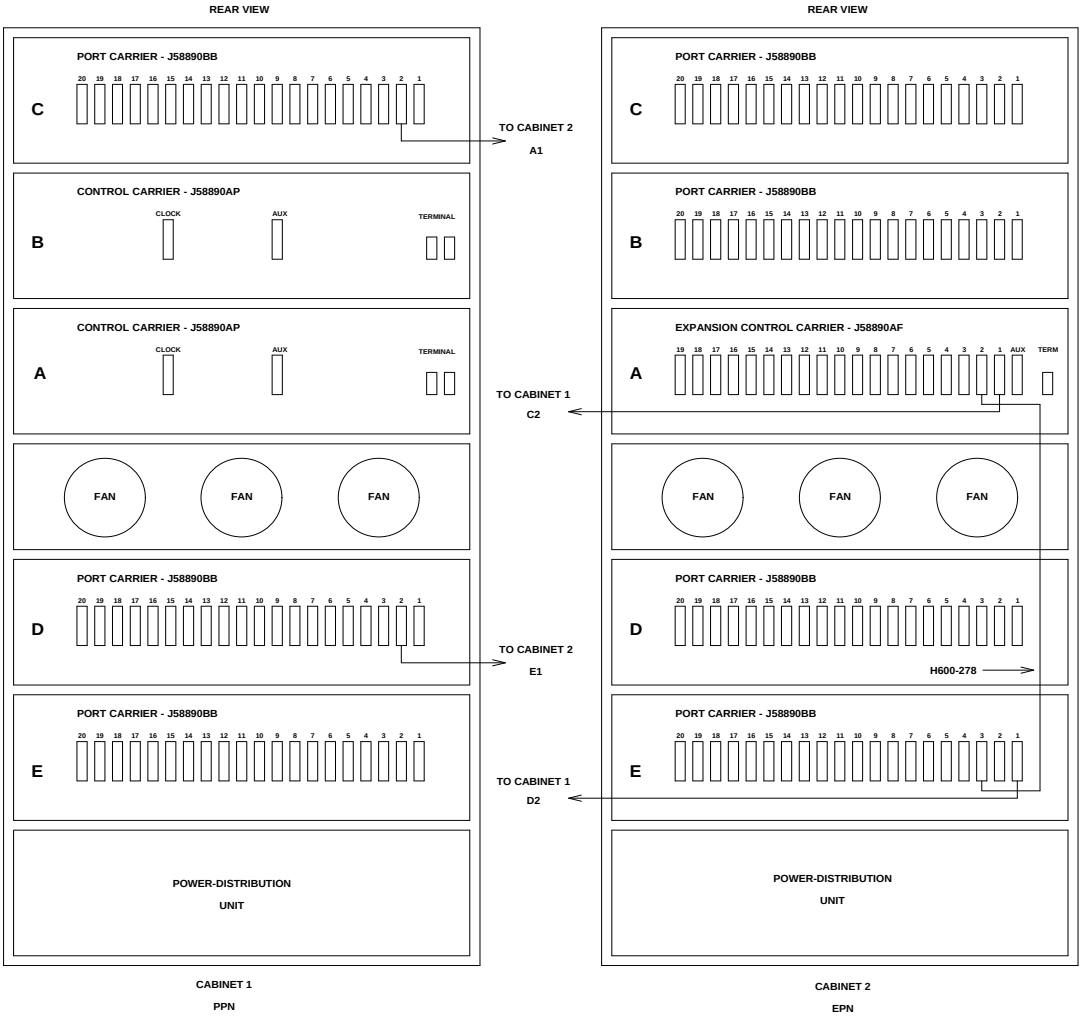

Figure 10-6. High-Reliability G3r with Three Port Networks

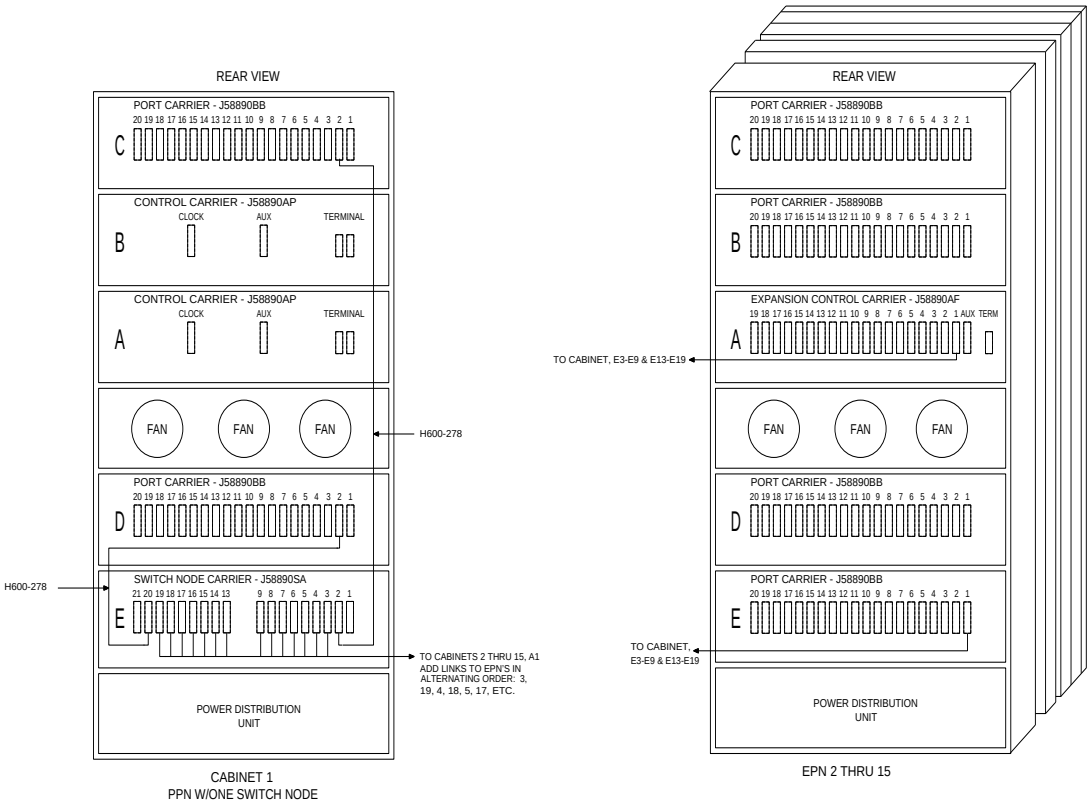

Figure 10-7. High-Reliability Fiber-Optic Connections through Center Stage Switch

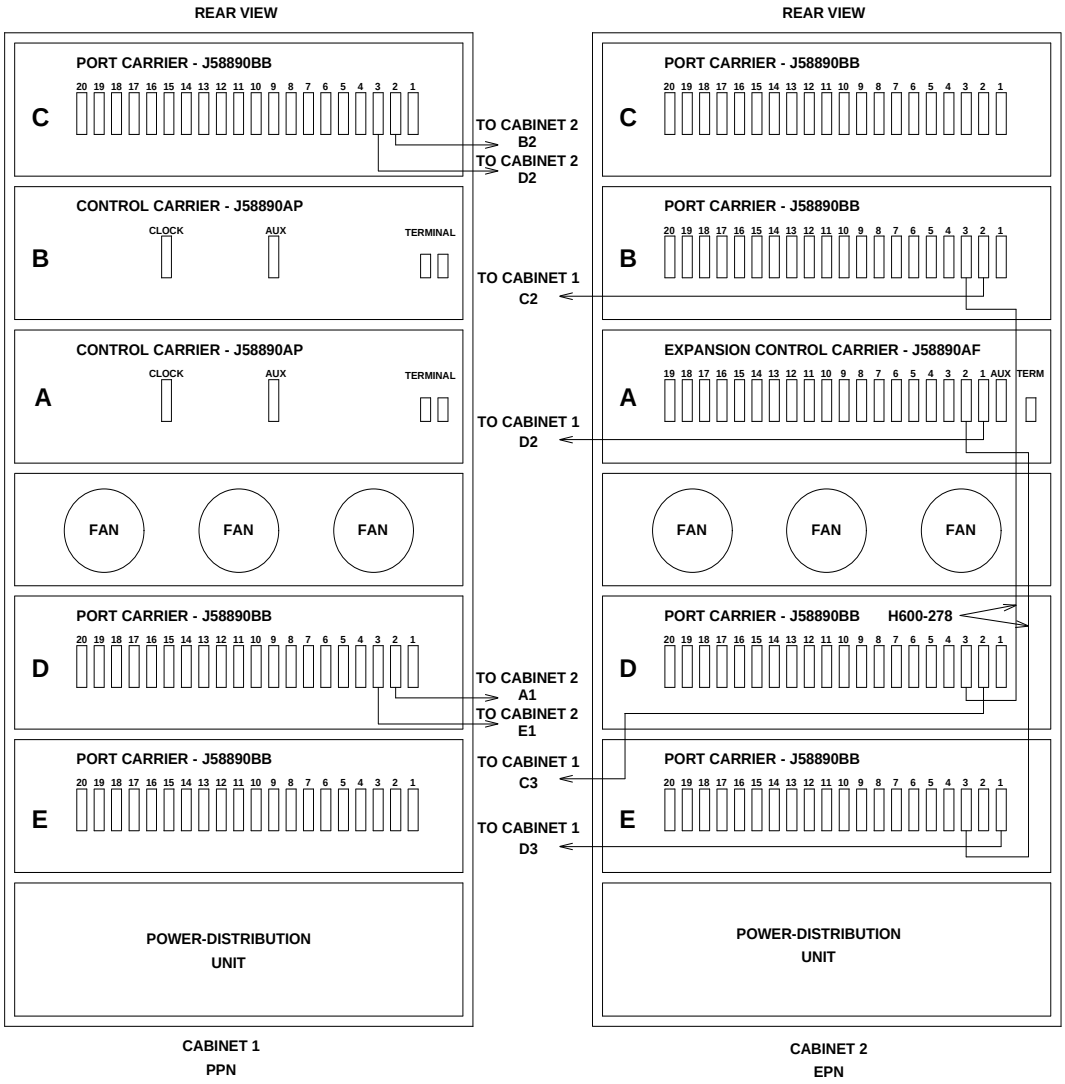

Figure 10-8. Critical-Reliability G3r with Three Port Networks

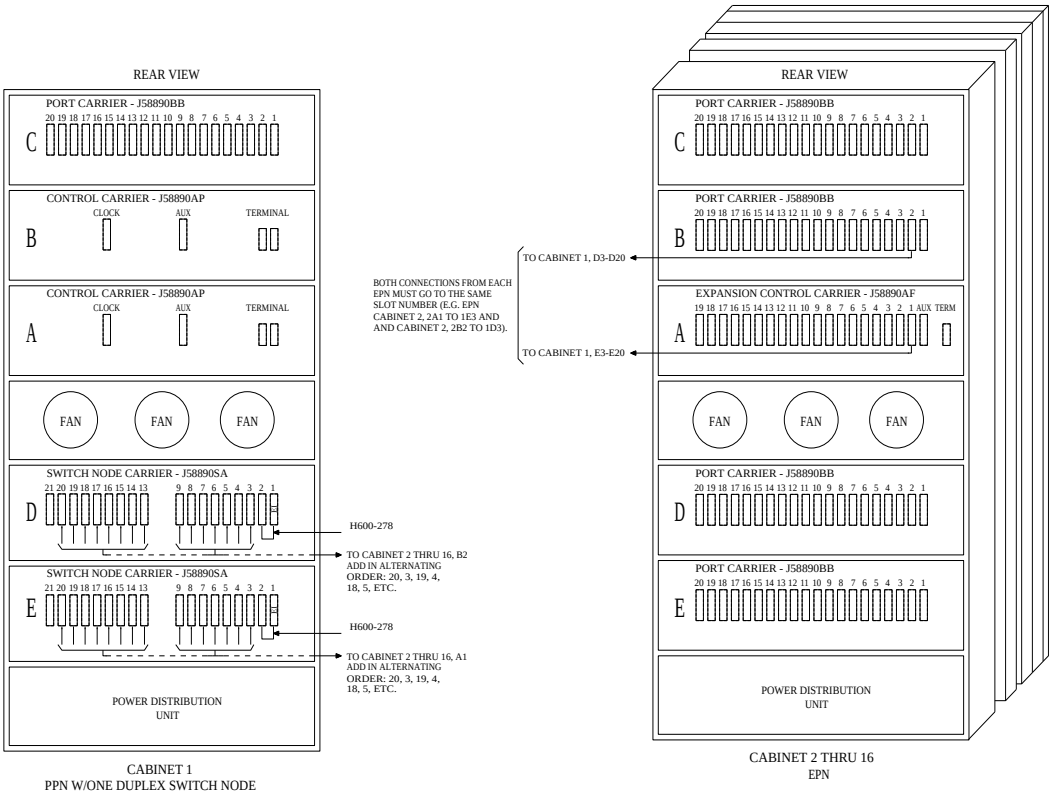

Figure 10-9. Critical-Reliability Fiber-Optic Connections through Center Stage Switch

4. Add Auxiliary Cabinet

Refer to ‘‘Install Auxiliary Cabinet’’ in *DEFINITY Communications System Generic 1 and Generic 3 Installation and Test*, 555-230-104, Issue 5, for instructions on installing the auxiliary cabinet.

5. Add SCC Port Cabinets

Up to three port cabinets may be stacked on an expansion control cabinet when additional features or equipment exceed the capacity of the present system.

See DANGER. Each cabinet is shipped in a polyethylene bag, packed in a cardboard container, with wood/Styrofoam pallets. The cardboard container is strapped to the pallet with a metal band.

DANGER:
A port cabinet may weigh as much as 125 pounds and requires two handlers. Use caution to avoid injury.

Unpack and Inspect for Damage

1. See DANGER. Unpack cabinet(s).

   DANGER:
   Take care to avoid injury while cutting and removing bands.

2. Visually inspect cabinet(s) for any physical damage caused during shipping. Report any damage for appropriate action per local procedures.

Service Interruption

Since the addition of port cabinets requires a service interruption, notify the customer in advance as to when the addition will be carried out.

Verify System Status

Before proceeding, the system should be examined for alarms, and every problem should be corrected. The system must be alarm-free.

Save Translations

1. Log in at the G3-MT terminal.
2. If the system is high- or critical-reliability, enter **`status spe`**, and press (RETURN) to verify that the standby SPE is refreshed and that the standby disk is in service.
3. Enter **`save translation [spe-a or both] disk`**, and press (RETURN). This command instructs the system to take all translation information in memory and write it to the disk(s).
4. If the SCC EPN contains a TN750/B Announcement circuit pack, enter **`display announcements`**, and press (RETURN).

   If administered recorded announcements are listed, enter **`list configuration software-version`**, press (RETURN). Check Page 2 of this form to find out when the announcements were last saved, and ask the customer whether any announcements have changed since then.

   If so, the current announcements can be saved using the save announcements command. Enter **`save announcements disk`**, and press (RETURN).
5. Enter **`backup disk [spe-a or both]`** and press (RETURN). This command instructs the system to backup the current information on disk to the system tape(s).
6. Update backup tape(s), if required.

Shut Down DEFINITY AUDIX System

1. See WARNING. If a DEFINITY AUDIX System resides in the SCC EPN to be upgraded, shut down the AUDIX assembly and allow the disk to completely spin down.

   WARNING:
   Neglecting to shut down an AUDIX assembly before powering down the system cabinet where it resides can damage the AUDIX disk.

2. See WARNING. To avoid an unexpected AUDIX reboot after an unplanned switch reboot, unseat the AUDIX assembly from its backplane connectors.

   WARNING:
   Before inserting or removing a circuit pack from a cabinet, put on a wrist strap and attach its plug or clip to the cabinet's frame.

Power Down Single-Carrier Cabinet EPN

1. At the SCC EPN, behind the power supply of each cabinet, set the circuit breaker to OFF (See Figure 10-10).
2. Unplug the power cord from the receptacle for each on-line cabinet. (See Figure 10-10, Figure 10-11, and Figure 10-12.)

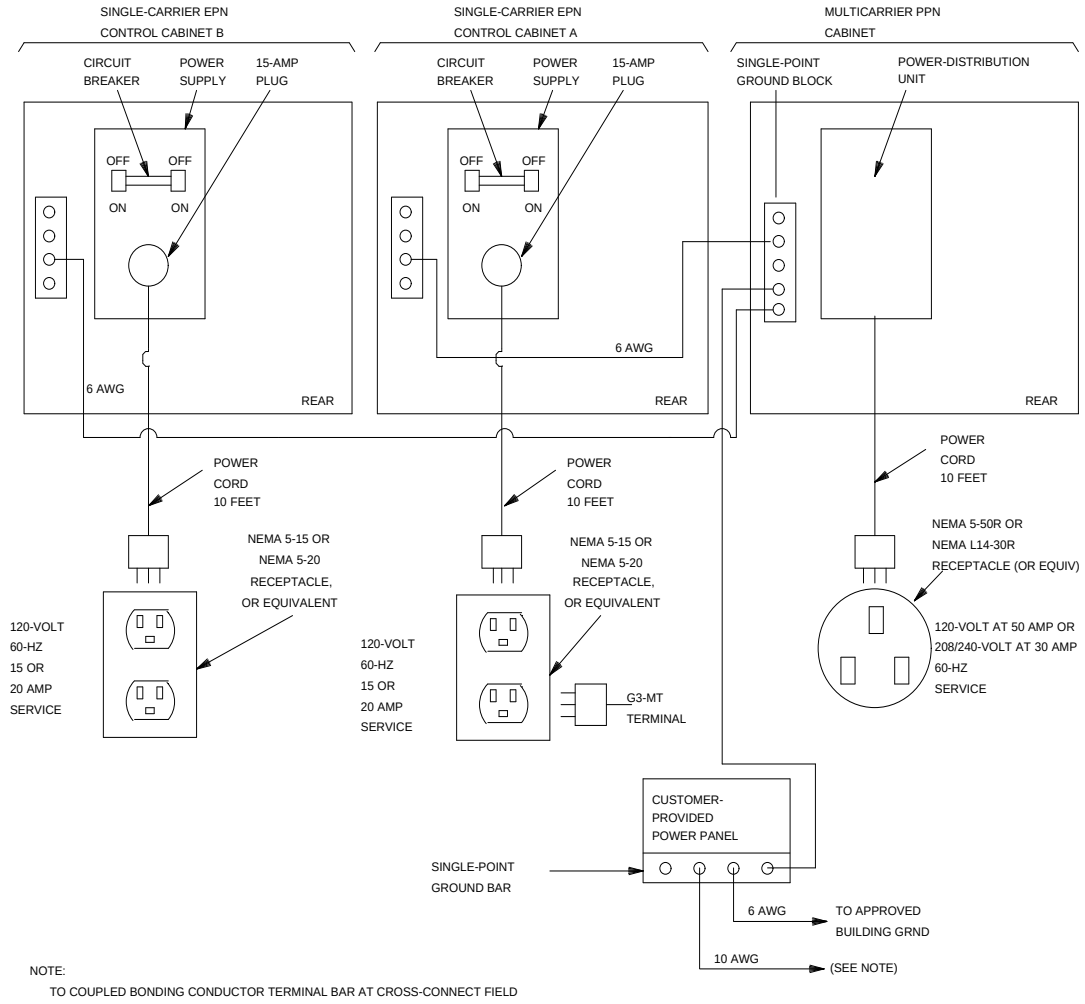

Figure 10-10. Typical Power and Grounding Layout

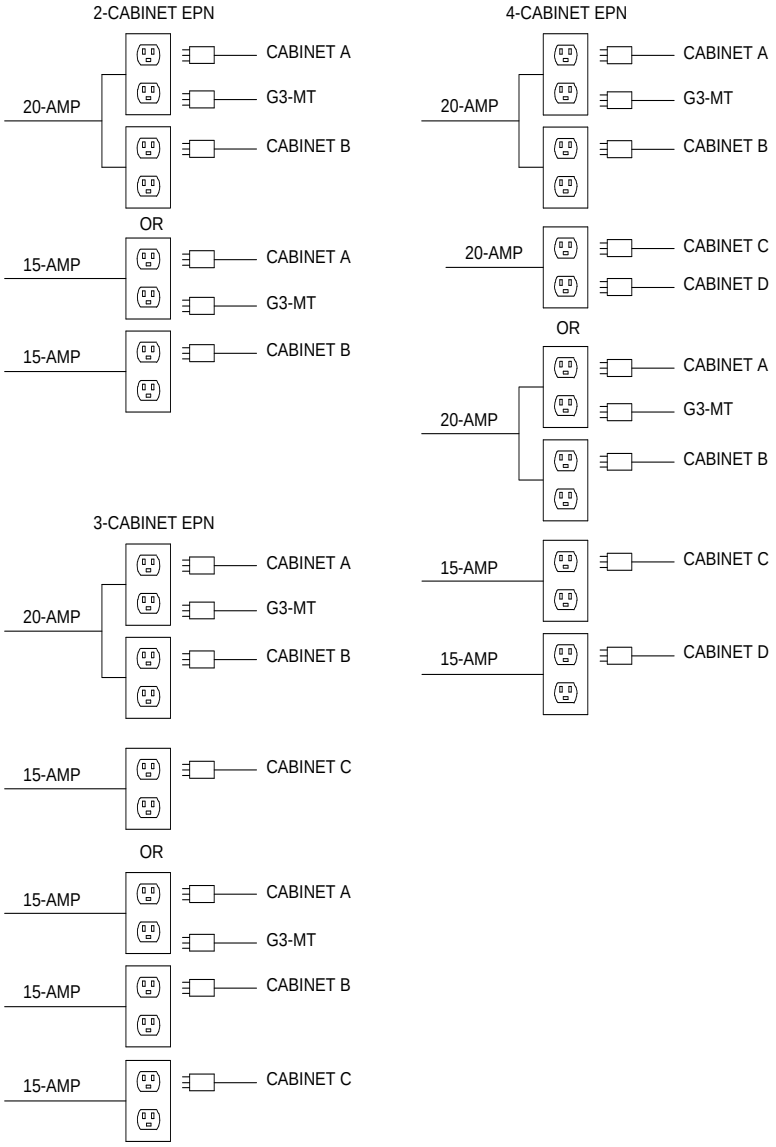

Figure 10-11. AC-Power Requirements for EPNs with Single-Carrier Cabinets

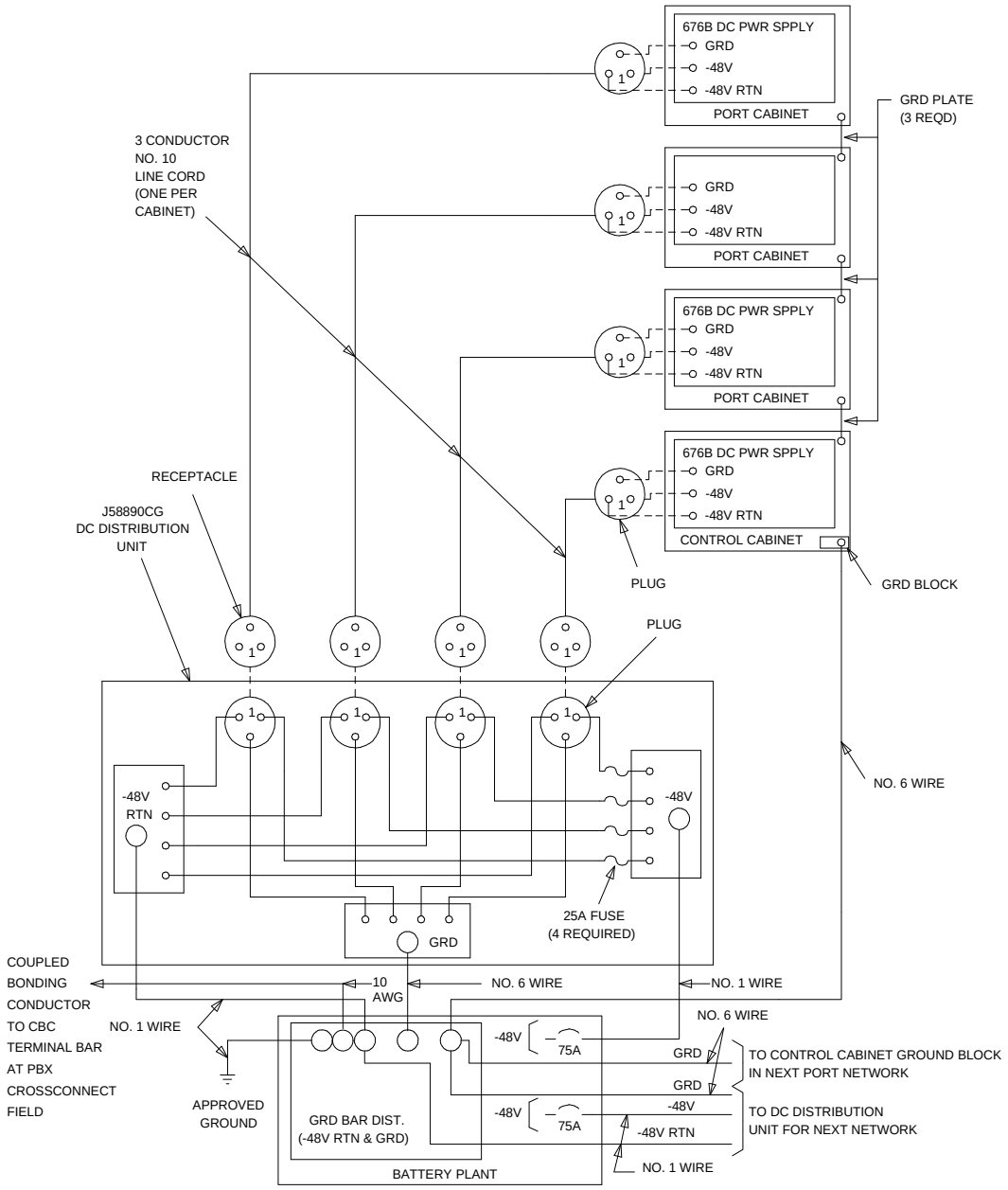

Figure 10-12. DC-Power and Grounding Wiring for Typical SCC EPN

Position Port Cabinets

1. Remove the front door of each cabinet.
   a. Use a screwdriver, and turn door-latch screw counter clockwise one-fourth turn to open door (See Figure 10-13).
   b. Lift door from lower slots and remove from cabinet.
2. See WARNING. Stack port cabinet(s) on top of expansion control cabinet A (or B if present) (See Figure 10-14).

   WARNING:
   A port cabinet may weigh as much as 125 pounds and requires two handlers to stack the cabinets. If the third or fourth cabinet is being installed, remove the front door, power supply, and circuit packs to lighten the load. Also, be sure that the two handlers are capable (size and strength) of lifting the cabinet into position.

3. Install cabinet label(s) on the front and back of cabinet(s) to the left of the circuit-pack labels. The second cabinet should be labeled B, the third cabinet should be labeled C, and the fourth cabinet should be labeled D.

Connect TDM/LAN Cables

1. Remove upper and lower rear covers.
2. Disconnect TDM/LAN bus terminator (Figure 10-15 or Figure 10-16) either from slot ‘‘18’’ of the expansion control cabinet or from slot ‘‘17’’ of the port cabinet and move to slot ‘‘17’’ of the top port cabinet.
3. Connect TDM/LAN cables (See Figure 10-15 or Figure 10-16). The TDM/LAN cable is located behind the lower rear cover.

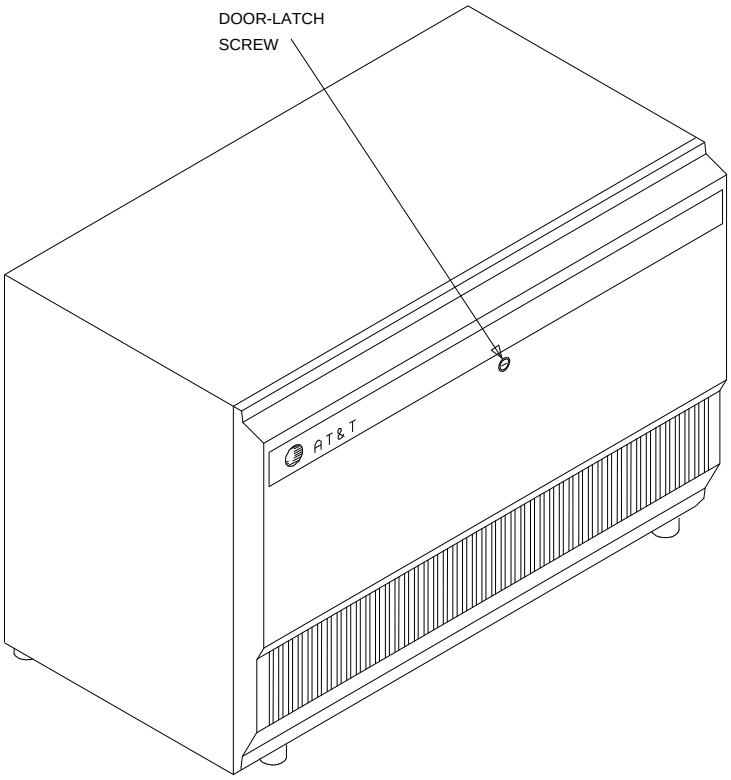

Figure 10-13. Location of Cabinet's Door-Latch Screw

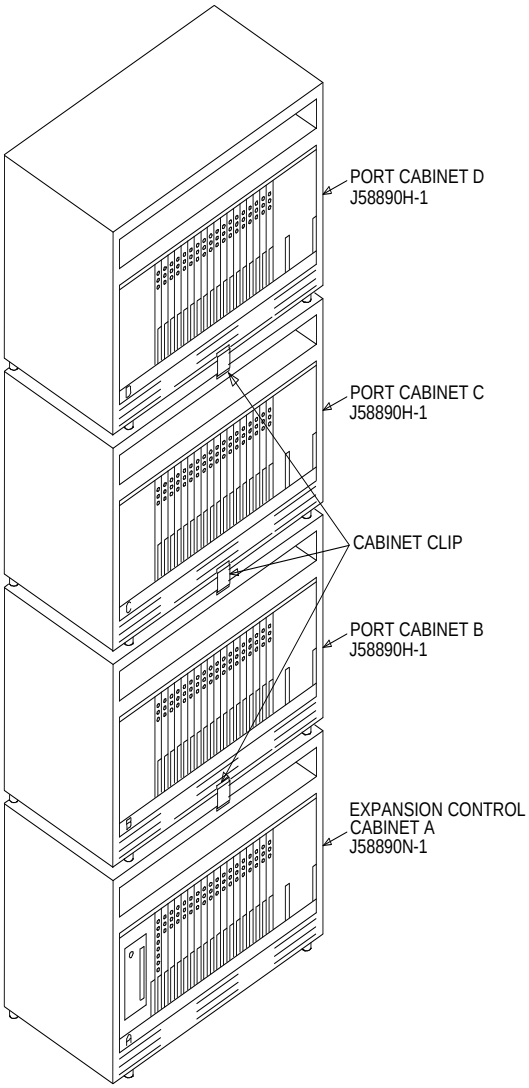

Figure 10-14. 4-Cabinet Port Network — Front View, Doors Removed

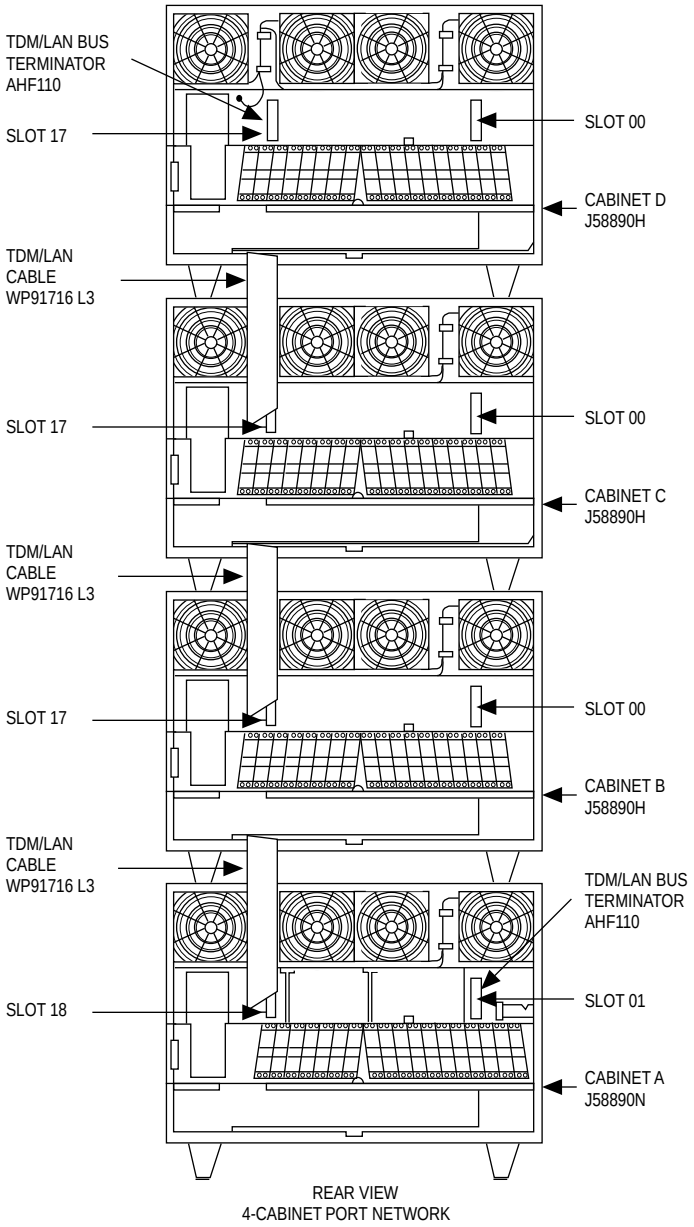

Figure 10-15. TDM/LAN Connections for Standard- or High-Reliability EPN

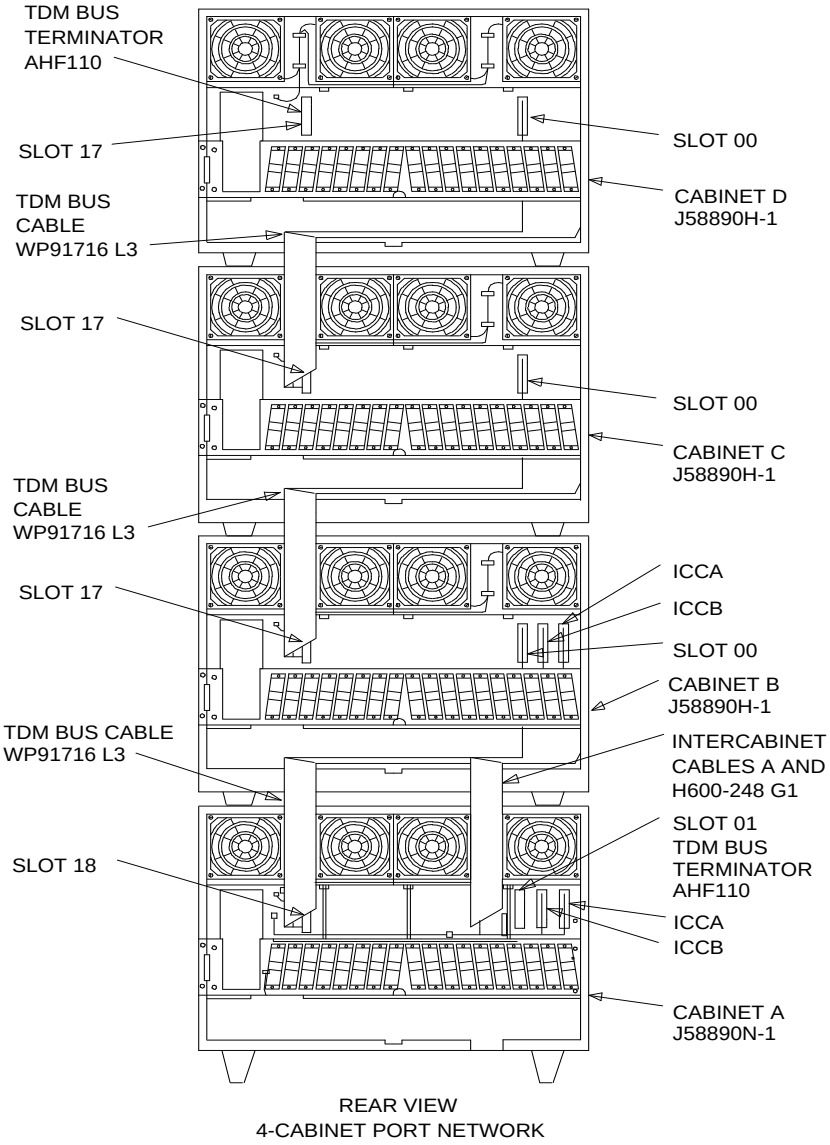

Figure 10-16. TDM/LAN Connections for Critical-Reliability EPN

Connect ICC Cables

If the port cabinet being installed is cabinet ‘‘B’’ of a critical-reliability EPN, ICC cables must be connected. Install both ICC cables (ICCA and ICCB). They are connected to the ‘‘ICC’’ block on the expansion control cabinet A and port cabinet B. Each cable is installed so that the dark stripe on the cable is on the bottom (See Table 10-1 and Figure 10-17 and Figure 10-18).

Table 10-1. Intercabinet Cable Connections

Connect ICC Cables				
	From		To	
	Carrier	Pin-Field Block	Carrier	Pin-Field Block
EPN	J58890N	ICCA	J58890H	ICCA
		ICCB		ICCB

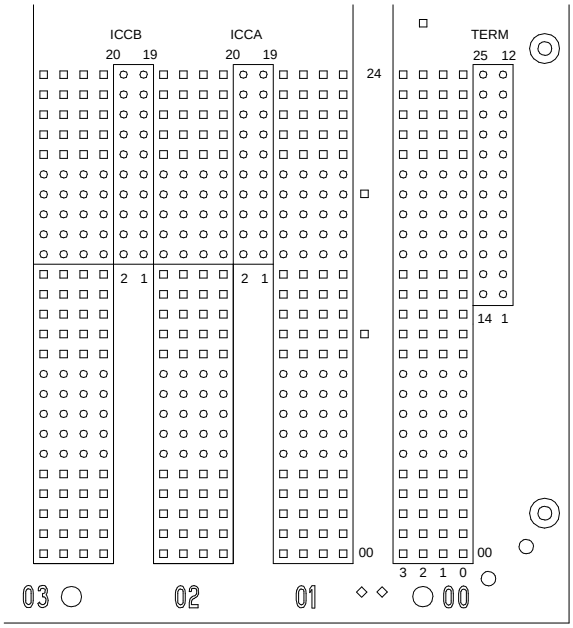

Figure 10-17. ICC Pin-Field Blocks on J58890N Expansion Control Cabinet

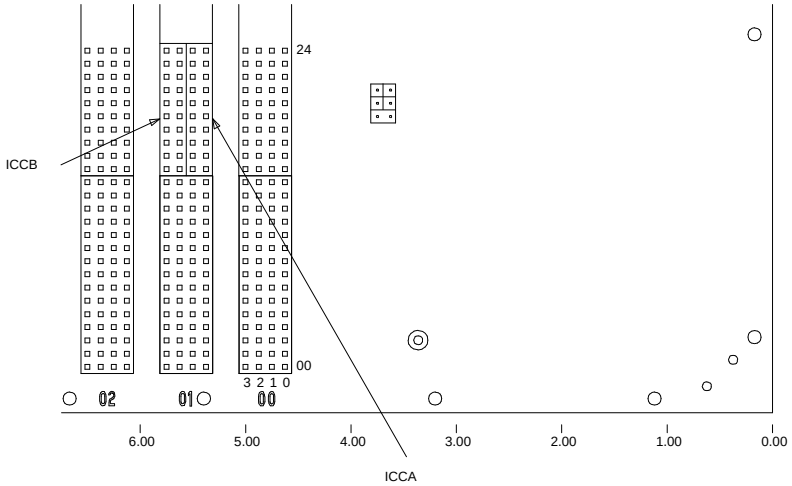

Figure 10-18. ICC Pin-Field Blocks on J58890H Port Cabinet

Install Cabinet-Address Plug(s)

On the backplane of the port cabinets to the right of slot ‘‘00,’’ a group of six pins are marked for the single-carrier cabinet address-plug connections. Install one plug in each port cabinet as shown in Figure 10-19.

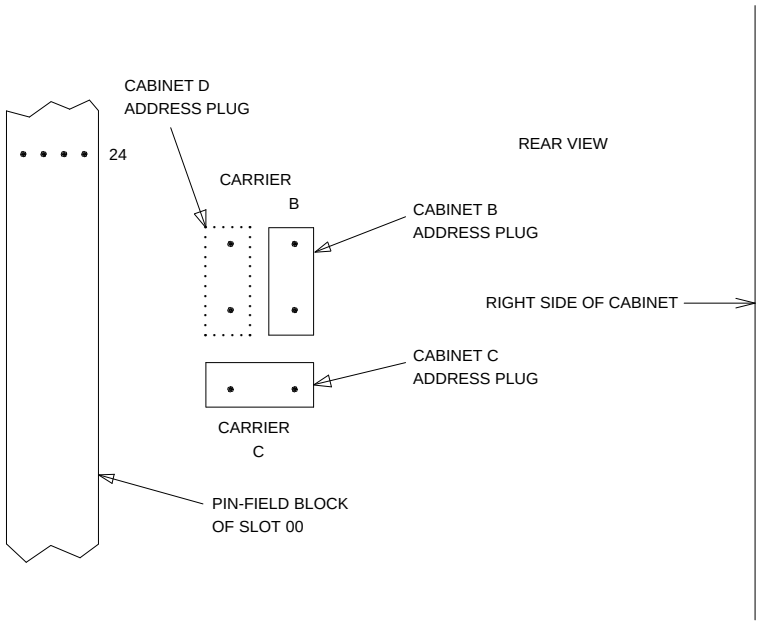

Figure 10-19. Location of Cabinet-Address Plugs

Install Ground Plates

The ground plate provides the ground connection between cabinets and also stabilizes the cabinets.

A ground plate is required between each cabinet (Figure 10-20 and Figure 10-21).

1. At the rear of the cabinets, replace the upper and lower covers with all the screws except for the screws that run along the top and bottom of each cabinet.
2. At the upper cabinet, place the top of the ground plate over the bottom of the lower rear cover. Line up the four holes in the ground plate with the four holes at the bottom of the lower rear cover of the cabinet, and install the screws. Do not tighten the screws.
3. At the top of the cabinet below the cabinet referred to in Step 2, line up the bottom of the ground plate with the top four holes in the upper rear cover of the lower cabinet. Install the four screws. Do not tighten at this time.
4. Repeat Steps 2 and 3 until the earthquake ground plates are installed between all cabinets.
5. Tighten all screws.

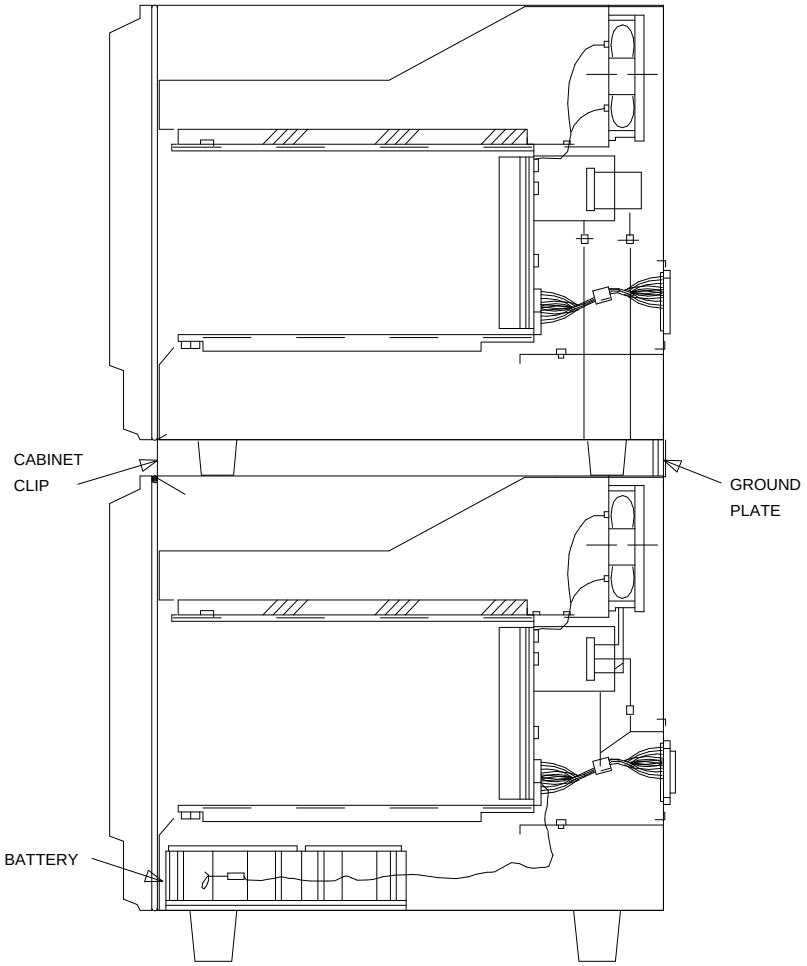

SIDE VIEW
2-CABINET PORT NETWORK

Figure 10-20. Location of Ground Plate and Cabinet Clips

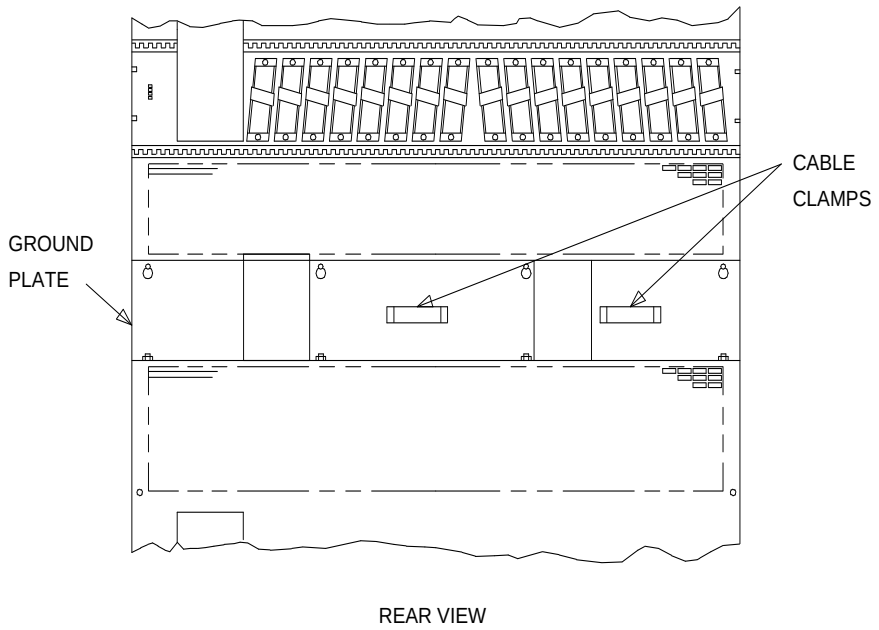

Figure 10-21. Location of Ground Plate and Cable Clamps on Single-Carrier Cabinet

Install Cabinet Clip(s) on Systems without Earthquake Protection

A cabinet clip, used to ground and stabilize the cabinets, is required between each cabinet.

At the front of the cabinets, install the cabinet clip between the cabinets by hooking the clip into the slot on the upper cabinet and snapping the straight leg of the clip into the slot on the lower cabinet (See Figure 10-20).

Install Earthquake Front Plates

The earthquake front plate replaces the cabinet clip for systems equipped with earthquake protection. An earthquake front plate is required between each cabinet (Figure 10-22).

1. At the front of the cabinets, line up the holes in the top of the earthquake front plate with the holes at the bottom of the upper cabinet, and insert the four screws. Do not tighten at this time.
2. At the front of the cabinets, line up the holes in the bottom of the earthquake front plate with the holes at the top of the lower cabinet and insert the four No. 12-24 by 1/2-inch thread-forming screws. Do not tighten at this time.
3. Repeat Steps 1 and 2 until all the cabinets are fastened together with the earthquake front plate.
4. Tighten all screws.

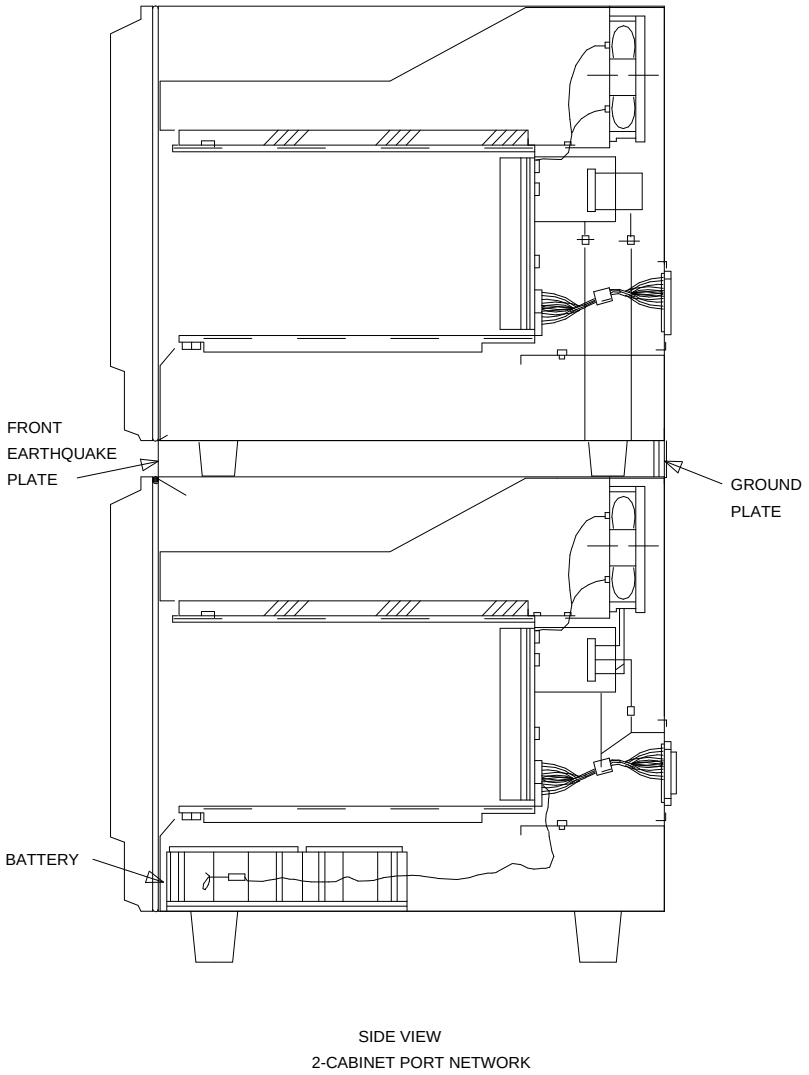

Figure 10-22. Location of Earthquake Front Plate and Battery

Install Cable Clamps

At the rear of the cabinets, install two cable clamps on each ground plate (See Figure 10-21). These clamps are used to hold the port cables.

Install Port Circuit Packs

See WARNING. Install circuit packs in the slots specified by the Customer-Service Document and Port-Assignment Worksheet. Also, See "9. Add Circuit Packs" on page 10-79 later in this chapter.

WARNING:
Before inserting or removing a circuit pack from a cabinet, put on a wrist strap and attach its plug or clip to the cabinet's frame.

Install Cables

Install cables from port cabinet(s) to cross-connect field, as required.

Detailed descriptions for installing wiring are contained in *DEFINITY Communications System Generic 1 and Generic 3 Installation and Test*, 555-230-104, Issue 5.

Connect AC Power

Each cabinet contains its own power supply, and an AC power cable must be connected to each cabinet. The customer-provided AC receptacle options are shown in Figure 10-11.

1. Connect an AC power cord to each added cabinet.
2. Connect the AC power cable from each cabinet to power receptacles (See Figure 10-10 and Figure 10-11).

Connect DC Power

Each network must have a DC power-distribution unit associated with it. Each DC power-distribution unit can furnish DC power for four single carrier cabinets. The DC power-distribution unit comes equipped with four power cords. Each cord comes equipped with the appropriate male and female connectors. Use the following instructions to connect each cabinet to the DC power-distribution unit.

- At the J58890CG DC power-distribution unit, connect the power cord to the cabinet connector associated with the cabinet being added. Route the cable to the rear of the cabinet being installed. Connect the power cord to the DC connector on the rear of the cabinet being installed (See Figure 10-12).

Reseat DEFINITY AUDIX System

See WARNING. If a DEFINITY AUDIX System resides in the SCC EPN, reseat the AUDIX assembly to its backplane connectors.

WARNING:
Before inserting or removing a circuit pack from a cabinet, put on a wrist strap and attach its plug or clip to the cabinet's frame.

Power Up SCC EPN

1. At the SCC EPN, on the rear of each cabinet on the back of the power supply, set the circuit breaker to ON (See Figure 10-10).
2. The system now goes through the level 4 rebooting process, loading the system program and translations from the disk. Rebooting takes 5 to 11 minutes.

   Refer to ''Initialization and Recovery'' and ''LED Interpretation'' chapters in *DEFINITY Communications System* in *DEFINITY Communications System Generic 3r V4 Maintenance*, 555-230-105, Issue 4, for circuit-pack LED indications and G3-MT terminal displays that occur during system reboot.
3. After the system reboot is finished and all trouble is cleared, verify that the EMERGENCY TRANSFER CONTROL switch is set to AUTO. This restores the system to the normal operating mode.

Enter Added Translations

Enter `added translation data` as applicable using *DEFINITY Communications System Generic 3 V4 Implementation*, 555-230-655.

Save Translations

1. If the system is high- or critical-reliability, enter **`status spe`**, and press (RETURN) to verify that the standby SPE is refreshed and that the standby disk is in service.
2. Enter **`save translation [spe-a or both] disk`**, and press (RETURN). This command instructs the system to take all translation information in memory and write it to the disk(s).
3. If the SCC EPN contains a TN750/B Announcement circuit pack, enter **`list configuration software-version`**, and press (RETURN).

   If Page 2 of this form shows that recorded announcements were saved, these announcements can be restored using the restore announcements command. Enter **`restore announcements [disk | tape]`**, and press (RETURN).
4. Enter **`backup disk [spe-a or both]`** and press (RETURN). This command instructs the system to backup the current information on disk to the system tape(s).
5. Update backup tape(s), if required.

6. Add Control Carrier

To upgrade a standard-reliability system to a high- or critical-reliability G3r system, a second control carrier is added to carrier position ‘‘B’’ of the existing multicarrier cabinet PPN.

Service Interruption

Since the addition of the second control carrier requires a service interruption, notify the customer in advance as to when the addition will be carried out.

Verify System Status

Before proceeding, the system should be examined for alarms, and every problem should be corrected. The system must be alarm-free.

Save Translations

1. Log in at the G3-MT terminal.
2. Enter **`save translation [spe-a] disk`**, and press (RETURN). This command instructs the system to take all translation information in memory and write it to the disk.
3. If the PPN or an EPN (where PPN Port Carrier B will be relocated) contains a TN750 Announcement circuit pack, enter **`display announcements`**, and press (RETURN).

   If administered recorded announcements are listed, enter **`list configuration software-version`**, press (RETURN). Check Page 2 of this form to find out when the announcements were last saved, and ask the customer whether any announcements have changed since then.

   If so, the current announcements can be saved using the save announcements command. Enter **`save announcements disk`**, and press (RETURN).
4. Enter **`backup disk [spe-a]`** and press (RETURN). This command instructs the system to backup the current information on disk to the system tape.
5. Update backup tape, if required.

Label Cables

To make reconnecting the cables simpler and more reliable, label both ends of the connector cables associated with the port carrier ‘‘B’’ to be removed.

Shut Down DEFINITY AUDIX System

1. See WARNING. If a DEFINITY AUDIX System resides in the PPN or an EPN (where PPN Port Carrier B will be relocated), shut down the AUDIX assembly and allow the disk to completely spin down.

   WARNING:
   Neglecting to shut down an AUDIX assembly before powering down the system cabinet where it resides can damage the AUDIX disk.

2. See WARNING. To avoid an unexpected AUDIX reboot after an unplanned switch reboot, unseat the AUDIX assembly from its backplane connectors.

   WARNING:
   Before inserting or removing a circuit pack from a cabinet, put on a wrist strap and attach its plug or clip to the cabinet's frame.

Power Down Port Networks

1. At the PPN, on the power-distribution unit, set the main circuit breaker to OFF.
2. At an EPN (where PPN port carrier B will be relocated), on the power-distribution unit, set the main circuit breaker to OFF.

Remove Doors and Panels and Disconnect Cables

1. Remove the front door from the PPN cabinet (if desired).
2. With the cable retainer in front of you and the part number visible (4B or 4C), locate the slot that is almost vertical. (This slot is adjacent to the part number.) Insert a flat-blade screwdriver with a wide blade (1/4-inch recommended) into the slot, and twist the screwdriver. The retainer will snap open easily so that the cable can be removed.
3. At the cabinet, disconnect previously labeled cables associated with the carrier to be removed.
4. Remove the back doors from the cabinet.

Remove Circuit Packs from Port Carrier B

1. To ensure that circuit packs and power units in the ‘‘B’’ carrier are properly replaced, label each component with its slot number.
2. Disconnect the power cords from the power units in the ‘‘B’’ carrier.
3. See WARNING. Remove all circuit packs and power units from carrier ‘‘B.’’ Store the circuit packs in the static-proof packaging.

   WARNING:
   Before inserting or removing a circuit pack from a cabinet, put on a wrist strap and attach its plug or clip to the cabinet’s frame.

4. Remove the circuit-pack blanks from slots that do not contain circuit packs.
5. Remove the front trim plate from the ‘‘B’’ carrier by pulling straight off.

Remove Port Carrier B

1. Behind the PPN, disconnect and remove the ICCB cable from between carrier ‘‘B’’ and carrier ‘‘A.’’ It will not be reused.
2. See NOTE. Disconnect one end of the TDM/LAN cable (between the ‘‘B’’ and ‘‘C’’ carriers) from the ‘‘B’’ carrier (See Figure 10-23).
3. See NOTE. Disconnect one end of the TDM/LAN cable (between the ‘‘B’’ and ‘‘A’’ carriers) from the ‘‘B’’ carrier (See Figure 10-23).

   NOTE:
   Note the position of the cable before disconnecting the TDM/LAN cables.

4. Disconnect one end of the eight ground straps (between the ‘‘B’’ and ‘‘C’’ carriers) from the ‘‘B’’ carrier (See Figure 10-24). These straps will be reconnected to the new ‘‘B’’ carrier.
5. Disconnect one end of the eight ground straps (between the ‘‘B’’ and ‘‘A’’ carriers) from the ‘‘B’’ carrier (See Figure 10-24). These straps will be reconnected to the new ‘‘B’’ carrier.
6. Disconnect the ‘‘P1’’ (small 9-pin) connector from the ‘‘B’’ carrier (See Figure 10-25). Move the cable into a position where it will not interfere with removing the carrier.
7. In front of ‘‘B’’ carrier, remove the four screws (top two first) holding the ‘‘B’’ carrier to the cabinet frame. Use a long-handle screwdriver or 5/16-inch socket with a 10-inch extension.

8. Behind the ‘‘B’’ carrier, remove the two screws holding the ‘‘B’’ carrier’s rear connector panel to the cabinet frame.
9. See CAUTION. Slide the carrier forward 1 to 2 inches; then, from the back, be sure that no cables or wiring harnesses are caught on the cabinet/carrier framework.

   CAUTION:
   Cables and wiring harnesses can be damaged if they catch on the framework and if too much pressure is applied in removing the carrier.

10. Remove the carrier by sliding it out the front of the cabinet.

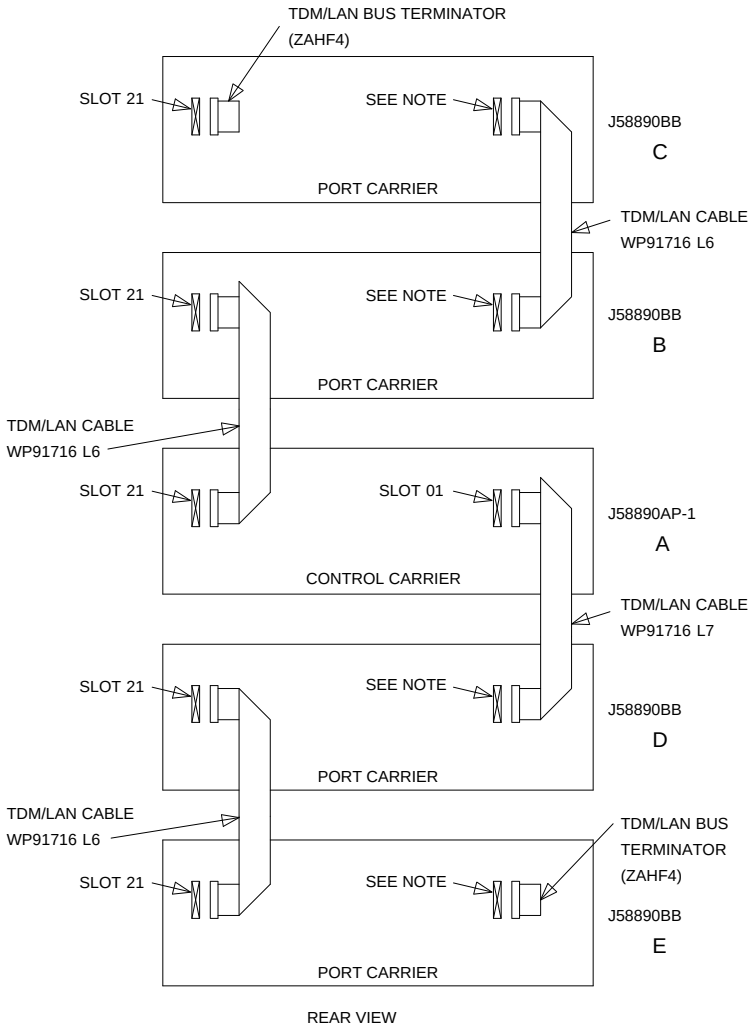

NOTE:

ON PORT CARRIER J58890BB-1, CONNECT THE TDM/LAN CABLE OR TDM/LAN TERMINATOR TO SLOT 02. ON PORT CARRIERS J58890BB-2 AND -3, CONNECT THE TDM/LAN CABLES TO SLOT 01.

Figure 10-23. TDM/LAN Connections for Standard-Reliability G3r PPN

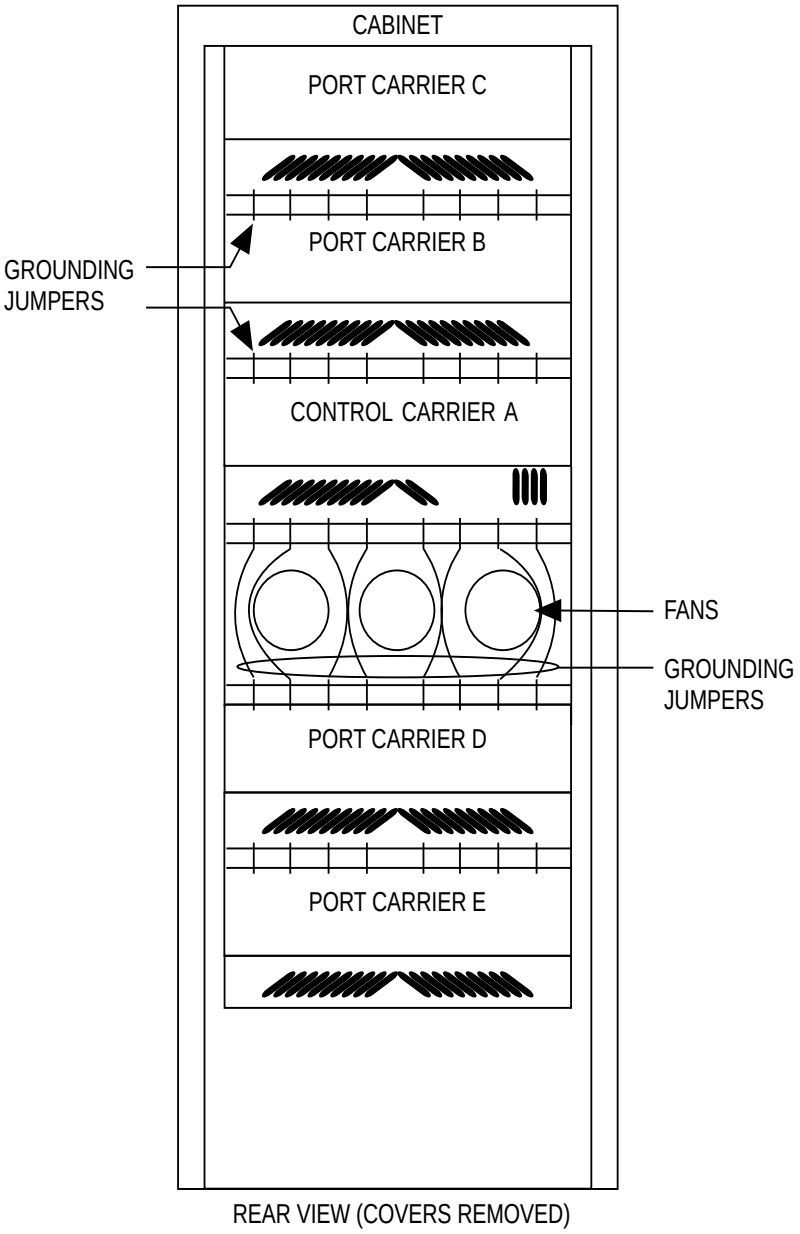

Figure 10-24. Locations of Grounding Jumpers

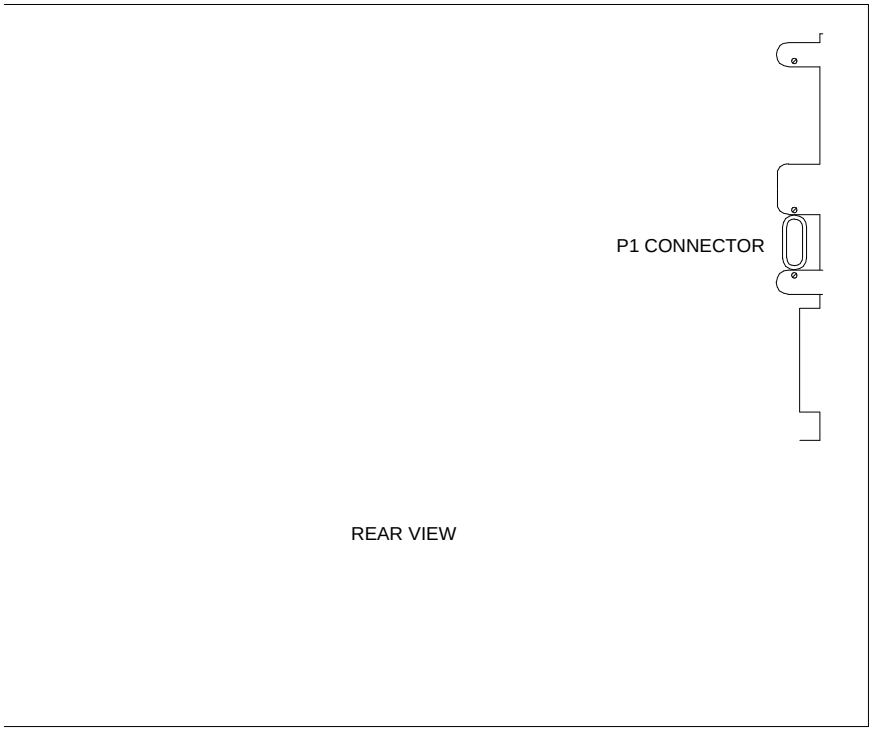

Figure 10-25. Location of P1 Connector

Prepare New Control Carrier B

1. Visually inspect the new carrier for any damage. Verify that the backplane pins are not bent.
2. Place the control carrier on the floor so that the rear of the carrier faces up.
3. Install the two AHF111 processor-bus (PX) terminators on the ‘‘B’’ carrier to the pin-field blocks marked ‘‘PX” (top portion of slots ‘‘4’’ and ‘‘10’’). The PX terminators are with attached with the components on the left side as viewed from the rear.

Install New Control Carrier B

1. Install the J58890AP control carrier in position ‘‘B’’ by lining up the plastic alignment tips on the top rear of the carrier with the screw holes in the cabinet. These alignment tips will support the carrier while the screws are being replaced. Ensure that the power cords are properly placed in the slots at the sides of the carrier.
2. See CAUTION. Fasten the carrier into position with four self-tapping screws saved from the removal of the old carrier.

   CAUTION:
   Carefully realign the threads on the self-tapping screws by turning them clockwise a turn or two before tightening them to avoid stripping the threads out of the framework.

3. Behind the carrier, replace the two screws saved from the removal of the old carrier.
4. Connect the ‘‘P1’’ (small) connector to the ‘‘B’’ carrier (See Figure 10-25). If necessary, to get enough slack in the cables, cut the tie wrap holding the intercabinet cable from the upright in the area being installed. Snap the connector lock into place to ensure the connection is properly made.
5. Connect the eight ground straps from the ‘‘C’’ carrier to the new ‘‘B’’ carrier (See Figure 10-24). These straps were left connected to the ‘‘C’’ carrier when the old ‘‘B’’ carrier was removed.
6. Connect the eight ground straps from the ‘‘A’’ carrier to the new ‘‘B’’ carrier (See Figure 10-24). These straps were left connected to the ‘‘A’’ carrier when the old ‘‘B’’ carrier was removed.

7. See NOTE. For an AC-powered control carrier, install the two new carrier-ground straps. One strap connects ground point ‘‘1’’ to the B-carrier frame (on the right side), and the other connects ground point ‘‘8’’ to the B-carrier frame (on the left side).

   NOTE:
   DC-powered carriers do not use these carrier-ground straps.

8. Connect the loose end of the TDM/LAN cable (between the ‘‘C’’ and ‘‘B’’ carriers) to the pin-field block marked ‘‘TDM/LAN’’ on the right side of the “B’’ carrier (See Figure 10-26 and Table 10-2). The other end remained connected to the ‘‘C’’ carrier when the old carrier was removed.
9. Connect the loose end of the TDM/LAN cable (between the ‘‘A’’ and ‘‘B’’ carriers) to the pin-field block marked ‘‘TDM/LAN’’ on the left side of the “B’’ carrier (See Figure 10-26 and Table 10-2). The other end remained connected to the ‘‘A’’ carrier when the old carrier was removed.

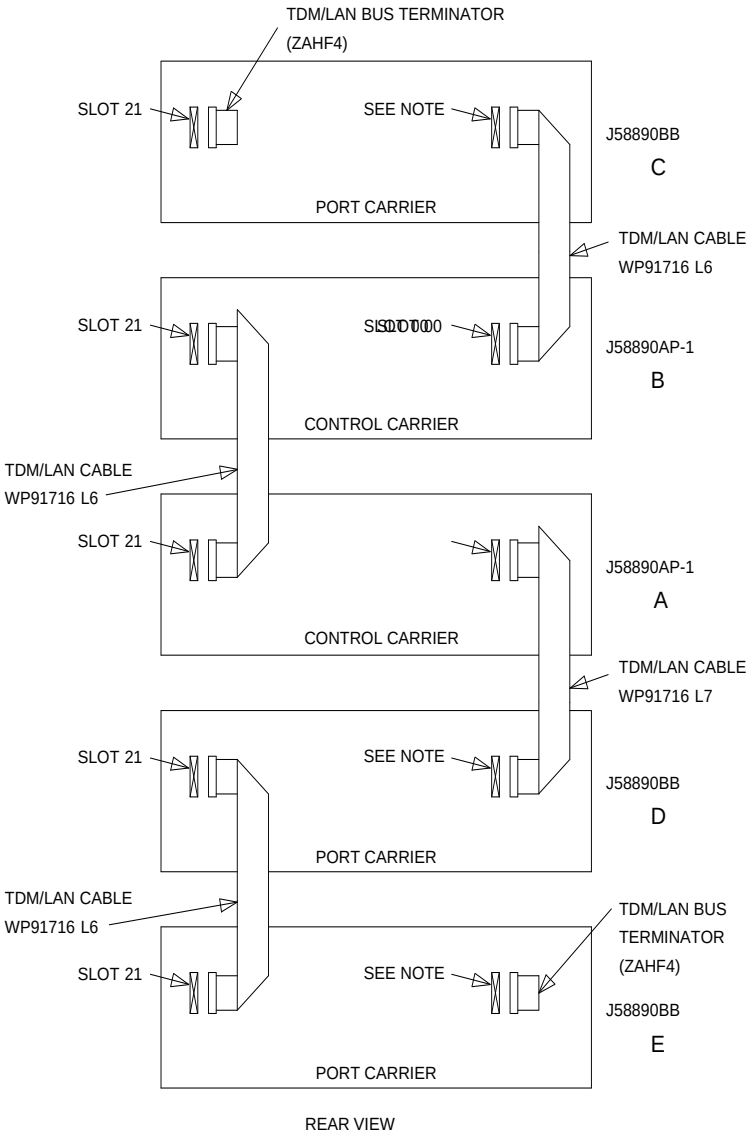

NOTE:

ON PORT CARRIER J58890BB-1, CONNECT THE TDM/LAN CABLE OR TDM/LAN TERMINATOR TO SLOT 02. ON PORT CARRIERS J58890BB-2 AND -3, CONNECT THE TDM/LAN CABLES TO SLOT 01.

Figure 10-26. TDM/LAN Connections for High-Reliability G3r PPN

Table 10-2. TDM/LAN Connections

"J" Number	Carrier Type	LHS Slot	RHS Slot
J58890BB-1	Port	21	02
J58890BB-2	Port	21	01
J58890BB-3	Port	21	01
J58890AP	Control	21	02

10. See CAUTION and NOTE. Install the alarm duplication cable (H600-198 G1) between carriers "B" and "A." Connect the cable to the "ICCA" pin-field block (to the right of the pin-field block for slot "00") of both carriers (See Figure 10-27). Connect the "UAK" (upper) connector to carrier "B," and connect the "LAK" (lower) connector to carrier "A."

    CAUTION:
    While installing the ICC cable connectors, be careful not to bend any backplane pins. Double check each connection to verify that the pins are straight.

    NOTE:
    With a connector in each hand, flex the wires within the cable's sheath to form a usable C-shaped cable.

11. See previous CAUTION. Install the ICCC cable (H600-182 G1) between carriers "B" and "A." Connect the cable to the "ICCC" pin-field block (behind slot "01") of both carriers (See Figure 10-27).

12. See previous CAUTION and following NOTE. Install the duplication cable (WP91954 L1) between carriers "B" and "A." Connect the cable to the "ICCD" pin-field block (behind slot "02") of both carriers (See Figure 10-27).

    NOTE:
    The duplication cable's connectors are keyed to ensure proper positioning on the pin-field block.

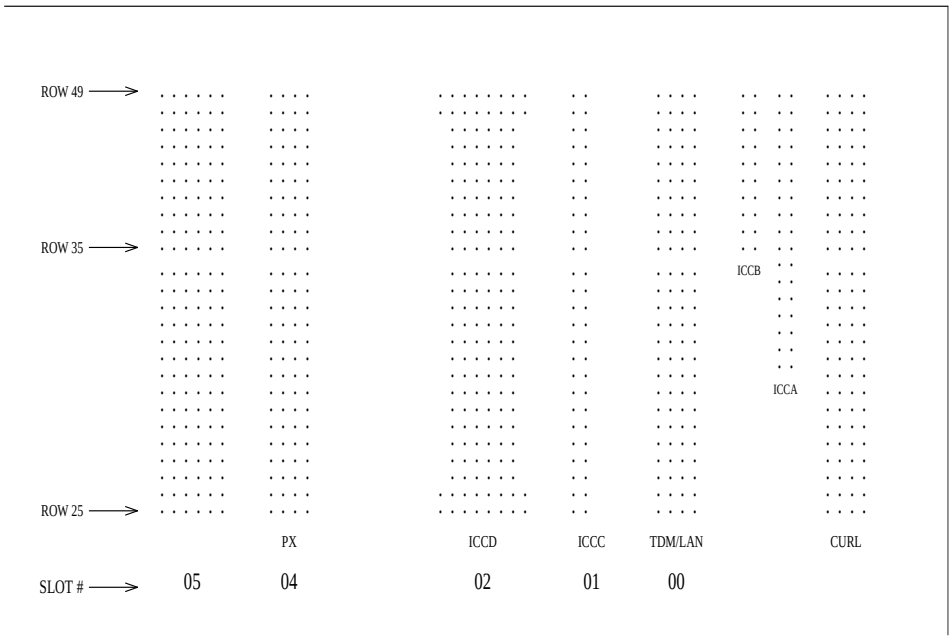

Figure 10-27. ICC Connections for G3r Control Carrier

13. Install the front trim plate on the ‘‘B’’ carrier.
14. Install the new power units into the ‘‘B’’ carrier. There are two different pairs of power units available. They are the 631DA1 and 631DB1 (for AC power), and the 644A and 645B (for DC power). Do not interchange the units. The 631DA1 or 644A is installed on the left side, while the 631DB1 or 645B is installed on the right side (See Figure 10-28).
15. Connect the power cords to the power units. The power cords are the white cables equipped with plugs that are run through the slots in the front of each carrier (See Figure 10-29).

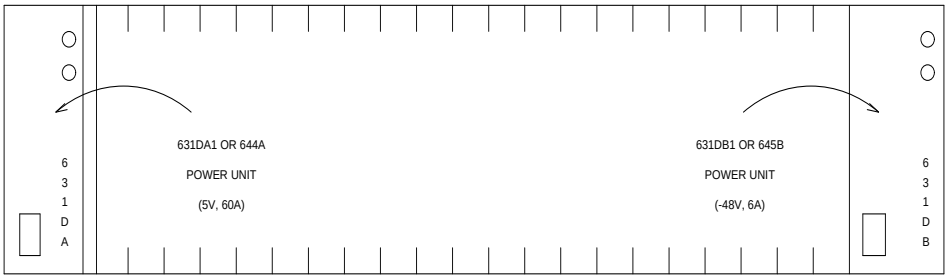

Figure 10-28. Locations of Power Units

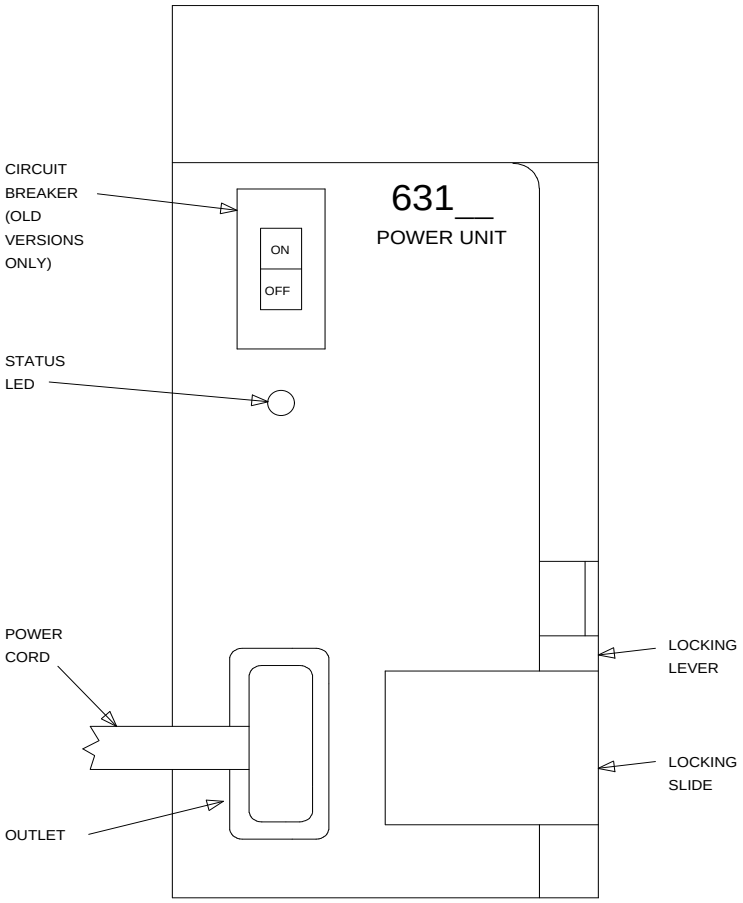

Figure 10-29. 631-Type Power Unit

Install Circuit Packs

1. See WARNING. Install a new UN330B Duplication Interface circuit pack into carrier ‘‘A.’’ UseFigure 10-30 and the decal as a guide.

   WARNING:
   Before inserting or removing a circuit pack from a cabinet, put on a wrist strap and attach its plug or clip to the cabinet’s frame.

2. See previous WARNING. Install the new G3r control circuit packs into carrier ‘‘B.’’ UseFigure 10-30 and the new decal (provided with the equipment) as a guide.
3. See previous WARNING. As necessary, install the new TN570 Expansion Interface circuit packs into each port network, and (if not also duplicating a switched node carrier) interconnect the port networks with the fiber-optic cables.
4. See previous WARNING. For a critical-reliability G3r system, install a new TN771C Maintenance/Test circuit pack into an available port slot of each EPN (if not already present).
5. Install circuit-pack blanks in slots not equipped with circuit packs.

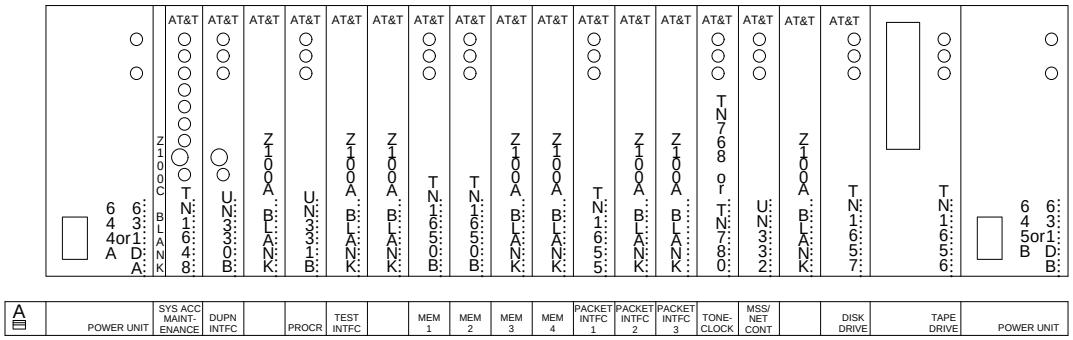

Figure 10-30. Circuit-Pack Locations in G3r Control Carrier

Relocate Port Carrier B

Refer to "8. Add MCC Port Carriers" on page 10-66 for instructions to relocate the removed port carrier.

Connect G3-MT to DOT Connector

Behind control carrier ‘‘A,’’ disconnect the G3-MT cable from the ‘‘TERM’’ connector, and reconnect the cable to the ‘‘DOT’’ (duplication-option terminal) connector.

Reseat DEFINITY AUDIX System

See WARNING. If a DEFINITY AUDIX System resides in the PPN or an EPN (where PPN port carrier ‘‘B’’ was relocated), reseat the AUDIX assembly to its backplane connectors.

WARNING:
Before inserting or removing a circuit pack from a cabinet, put on a wrist strap and attach its plug or clip to the cabinet’s frame.

Power Up System

1. At an EPN (where PPN port carrier ‘‘B’’ was relocated), on the power-distribution unit, set the main circuit breaker to ON.
2. At the PPN, on the power-distribution unit, set the main circuit breaker to ON.
3. The system now goes through the level 4 rebooting process, loading the system program and default or current translations from the disk. Rebooting takes 5 to 11 minutes.

   NOTE:
   Ignore alarms for now.

   Refer to ‘‘Initialization and Recovery’’ and ‘‘LED Interpretation’’ chapters in DEFINITY Communications System Generic 3r V4 Maintenance, 555-230-105, Issue 4, for circuit-pack LED indications and G3-MT terminal displays that occur during system reboot.
4. If new tapes were made off-site at the FSAC or STS, insert them in the tape drives. Otherwise, make software modifications and then go to step 8.
5. Enter the reset system 4 tape command to copy the translations from tape to memory.
6. Remove the translated tapes and move the black write-protect slide to record.

7. Re-insert the write-enabled tapes into the drives.
8. Clear any alarms.
9. Enter the save translation [both] tape command if translation changes were made in step 8 above.
10. Enter the restore disk [both] full command to copy the translations from tape to disk.
11. After the system reboot is finished and all trouble cleared, verify that the EMERGENCY TRANSFER CONTROL switch is set to AUTO. This restores the system to the normal operating mode.

Enable SPE Duplication

If not also duplicating switched node carriers, refer to Duplication-Related System Parameters in *DEFINITY Communications System Generic 3 V4 Implementation*, 555-230-655, to enable Switch Processing Element (SPE) duplication.

Enable PNC Duplication

For a critical-reliability G3r system, enter **`change system-parameters customer-options`**. Press (RETURN). Use this form to enable the port-network control (PNC) duplication option. See *DEFINITY Communications System Generic 3 V4 Implementation*, 555-230-655, for details on enabling this option.

7. Add Switched Node Carrier

See NOTE. To upgrade a standard- or high-reliability system to a critical-reliability G3r system, a second switched node carrier is added either to the empty ‘‘E” carrier position of an existing multicarrier port network or to the ‘‘D’’ carrier position (as the second switched node carrier) of an existing multicarrier port network.

NOTE:
To avoid moving a port carrier, the preferred practice is to place the new switched node carrier in an empty carrier position.

Service Interruption

Since the addition of the second switched node carrier requires a service interruption, notify the customer in advance as to when the addition will be carried out.

Verify System Status

Before proceeding, the system should be examined for alarms, and every problem should be corrected. The system must be alarm-free.

Save Translations

1. Log in at the G3-MT terminal.
2. If the system is high- or critical-reliability, enter **`status spe`**, and press (RETURN) to verify that the standby SPE is refreshed and that the standby disk is in service.
3. Enter **`save translation [spe-a or both] disk`**, and press (RETURN). This command instructs the system to take all translation information in memory and write it to the disk(s).
4. If the system contains a TN750 Announcement circuit pack, enter **`display announcements`**, and press (RETURN).

   If administered recorded announcements are listed, enter **`list configuration software-version`**, press (RETURN). Check Page 2 of this form to find out when the announcements were last saved, and ask the customer whether any announcements have changed since then.

   If so, the current announcements can be saved using the save announcements command. Enter **`save announcements disk`**, and press (RETURN).
5. Enter **`backup disk [spe-a or both]`** and press (RETURN). This command instructs the system to backup the current information on disk to the system tape(s).
6. Update backup tape(s), if required.

Shut Down DEFINITY AUDIX System

1. See WARNING. If a DEFINITY AUDIX System resides in the system, shut down the AUDIX assembly and allow the disk to completely spin down.

   WARNING:
   Neglecting to shut down an AUDIX assembly before powering down the system cabinet where it resides can damage the AUDIX disk.

2. See WARNING. To avoid an unexpected AUDIX reboot after an unplanned switch reboot, unseat the AUDIX assembly from its backplane connectors.

   WARNING:
   Before inserting or removing a circuit pack from a cabinet, put on a wrist strap and attach its plug or clip to the cabinet's frame.

Power Down System

1. At the PPN, on the power-distribution unit, set the main circuit breaker to OFF.
2. At the PPN, on the power-distribution unit, set the main circuit breaker to OFF.

Remove Doors and Panels and Disconnect Cables

1. Remove the front door from the multicarrier cabinet where the switched node carrier will be installed (if desired).
2. With the cable retainer in front of you and the part number visible (4B or 4C), locate the slot that is almost vertical. (This slot is adjacent to the part number.) Insert a flat-blade screwdriver with a wide blade (1/4-inch recommended) into the slot, and twist the screwdriver. The retainer will snap open easily so that the cable can be removed.
3. At the cabinet, disconnect previously labeled cables associated with the carrier to be removed.
4. Remove the back doors from the cabinet.

Remove Circuit Packs from Port Carrier D

NOTE:
Skip these steps if a switched node carrier is being added to an empty carrier position.

1. To ensure that circuit packs and power units in the ‘‘D’’ carrier are properly replaced, label each component with its slot number.
2. Disconnect the power cords from the power units in the ‘‘D’’ carrier.
3. See WARNING. Remove all circuit packs and power units from carrier ‘‘D.’’ Store the circuit packs in the static-proof packaging.

   WARNING:
   Before inserting or removing a circuit pack from a cabinet, put on a wrist strap and attach its plug or clip to the cabinet’s frame.

4. Remove the circuit-pack blanks from slots that do not contain circuit packs.
5. Remove the front trim plate from the ‘‘D’’ carrier by pulling straight off.

Remove Port Carrier D

1. If a switched node carrier is being installed in the ‘‘D’’ position of an EPN, remove the TDM/LAN cable from between the ‘‘D’’ and ‘‘A’’ carriers.

   See NOTE. For other EPNs or the PPN, disconnect one end of the TDM/LAN cable (between the ‘‘D’’ and ‘‘A’’ carriers) from the ‘‘D’’ carrier.

   NOTE:
   Note the position of the cable before disconnecting the TDM/LAN cables.

2. Remove the ZAHF4 TDM/LAN bus terminator from slot ‘‘21’’ of the ‘‘D’’ carrier.
3. Disconnect one end of the eight ground straps (between the ‘‘D’’ and “E’’ carriers) from the ‘‘D’’ carrier (See Figure 10-31). These straps will be reconnected to the new ‘‘D’’ carrier.
4. Disconnect one end of the eight ground straps (between the ‘‘D’’ and ‘‘A’’ carriers) from the ‘‘D’’ carrier (See Figure 10-31). These straps will be reconnected to the new ‘‘D’’ carrier.
5. Disconnect the ‘‘P1’’ (small 9-pin) connector from the ‘‘D’’ carrier (See Figure 10-32). Move the cable into a position where it will not interfere with removing the carrier.
6. Remove the four screws (top two first) holding the ‘‘D’’ carrier to the cabinet frame. Use a long-handle screwdriver or 5/16-inch socket with a 10-inch extension.
7. Behind the ‘‘D’’ carrier in a ‘‘DEFINITY style’’ cabinet, remove the two screws holding the ‘‘D’’ carrier to the cabinet frame.
8. See CAUTION. Slide the carrier forward 1 to 2 inches; then, from the back, be sure that no cables or wiring harnesses are caught on the cabinet/carrier framework.

   CAUTION:
   Cables and wiring harnesses can be damaged if they catch on the framework and if too much pressure is applied in removing the carrier.

9. Remove the carrier by sliding it out the front of the cabinet.

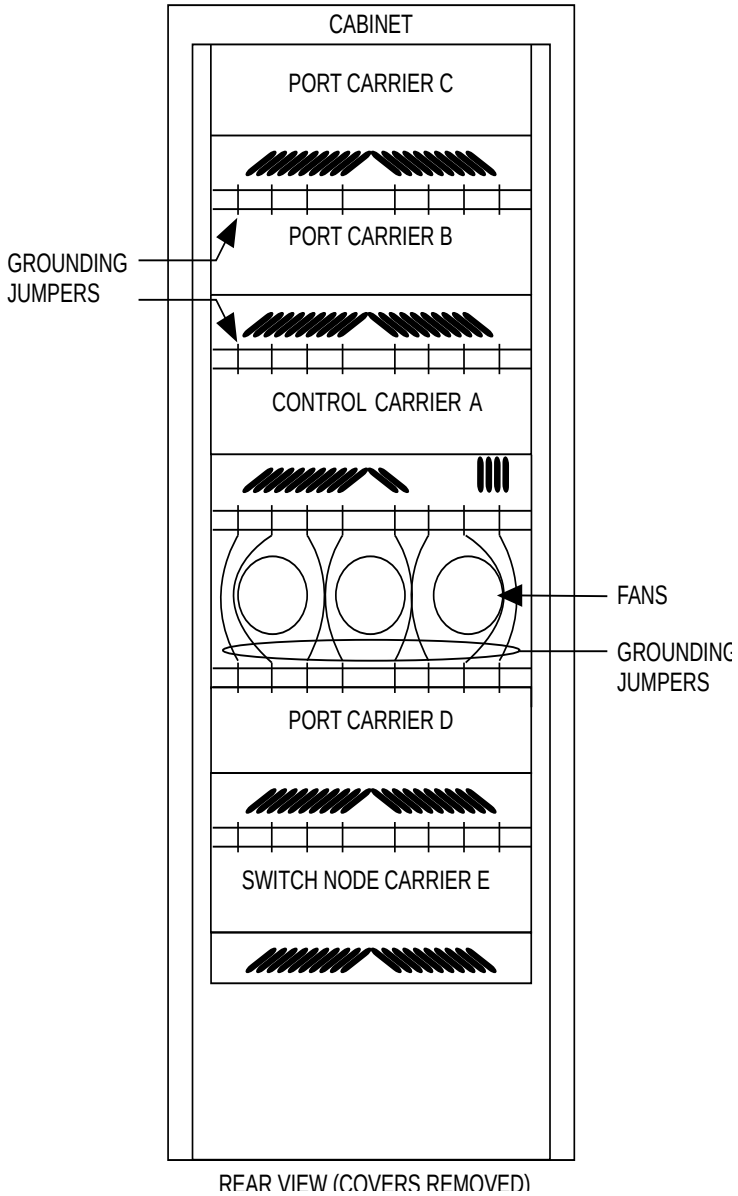

Figure 10-31. Locations of Grounding Jumpers

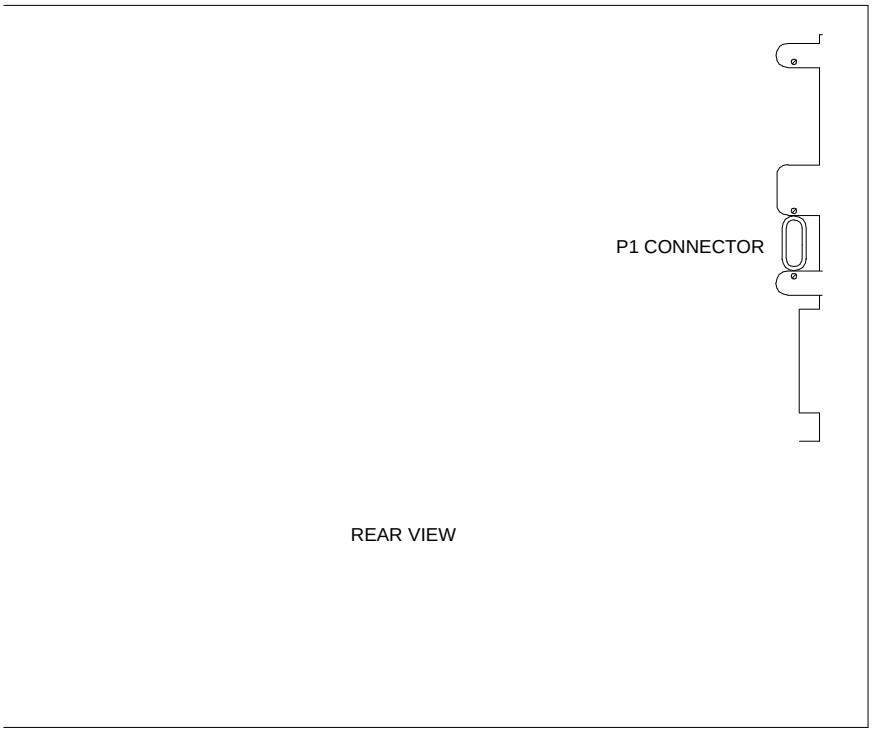

Figure 10-32. Location of P1 Connector

Prepare New Switched Node Carrier D

1. Visually inspect the new carrier for any damage. Verify that the backplane pins are not bent.
2. Place the switch node carrier on the floor so that the rear of the carrier faces up.
3. Install the four AHF105 switched node (SN) bus terminators on the ‘‘D’’ carrier to the pin-field blocks marked ‘‘SNTRM’’ (top and bottom portions of slots ‘‘02’’ and ‘‘20’’). The SN bus terminators are attached with the components on the left side as viewed from the rear.
4. At the rear connector panel, determine which connectors will have a cable attached, and install a 4C cable retainer on each of these connectors.

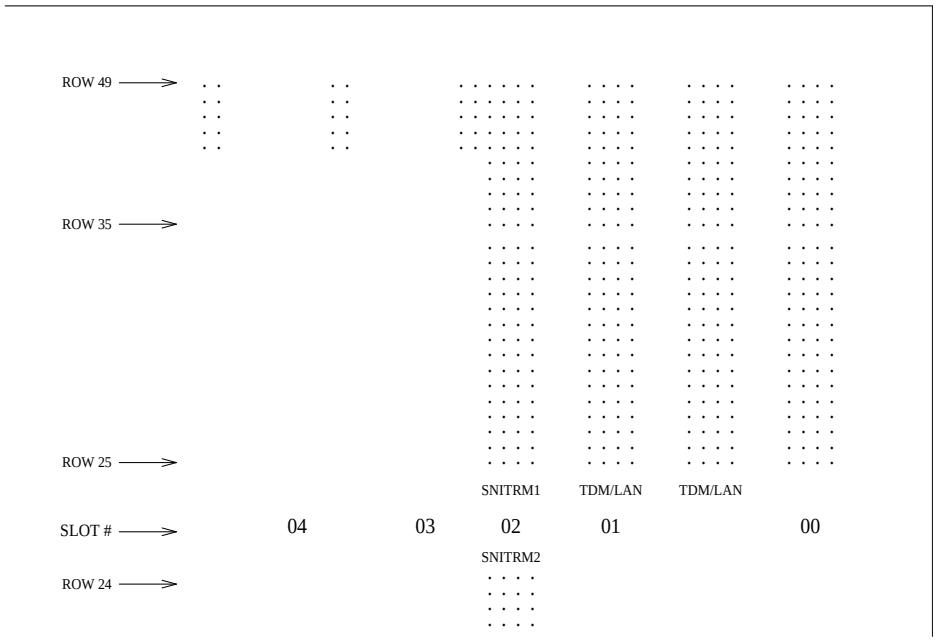

Figure 10-33. ICC Connections for Switch Node Carrier

Install New Switch Node Carrier D

1. Install the J58890SA switch node carrier in position ‘‘D’’ by lining up the plastic alignment tips on the top rear of the carrier with the screw holes in the cabinet. These alignment tips will support the carrier while the screws are being replaced. Ensure that the power cords are properly placed in the slots at the sides of the carrier.
2. See CAUTION. Fasten the carrier into position with four self-tapping screws saved from the removal of the old carrier.

   CAUTION:
   Carefully realign the threads on the self-tapping screws by turning them clockwise a turn or two before tightening them to avoid stripping the threads out of the framework.

3. Behind the carrier in a ‘‘DEFINITY style’’ cabinet, replace the two screws saved from the removal of the old carrier.
4. Connect the ‘‘P1’’ (small) connector to the ‘‘D’’ carrier (See Figure 10-32). If necessary, to get enough slack in the cables, cut the tie wrap holding the intercabinet cable from the upright in the area being installed. Snap the connector lock into place to ensure the connection is properly made.
5. Connect the eight ground straps from the ‘‘E” carrier to the new ‘‘D’’ carrier (See Figure 10-31). These straps were left connected to the “E’’ carrier when the old ‘‘D’’ carrier was removed.
6. Connect the eight ground straps from the ‘‘A’’ carrier to the new ‘‘D’’ carrier (See Figure 10-31). These straps were left connected to the ‘‘A’’ carrier when the old ‘‘D’’ carrier was removed.
7. See NOTE. For an AC-powered switch node carrier, install the two new carrier-ground straps. One strap connects ground point ‘‘1’’ to the D-carrier frame (on the right side), and the other connects ground point ‘‘8’’ to the D-carrier frame (on the left side).

   NOTE:
   DC-powered carriers do not use these carrier-ground straps.

8. If a switched node carrier is being installed in the ‘‘D’’ position of the PPN, install the TDM/LAN cable (between the “E’’ and ‘‘D’’ carriers) to the pin-field block marked ‘‘TDM/LAN’’ on the right side of the both carriers (See Figure 10-35 and Table 10-3).
9. Also, for the PPN, connect the loose end of the TDM/LAN cable (between the ‘‘A’’ and ‘‘D’’ carriers) to the other pin-field block marked ‘‘TDM/LAN’’ on the right side of the ‘‘D’’ carrier (See Figure 10-35 and Table 10-3). The other end remained connected to the ‘‘A’’ carrier when the old carrier was removed.

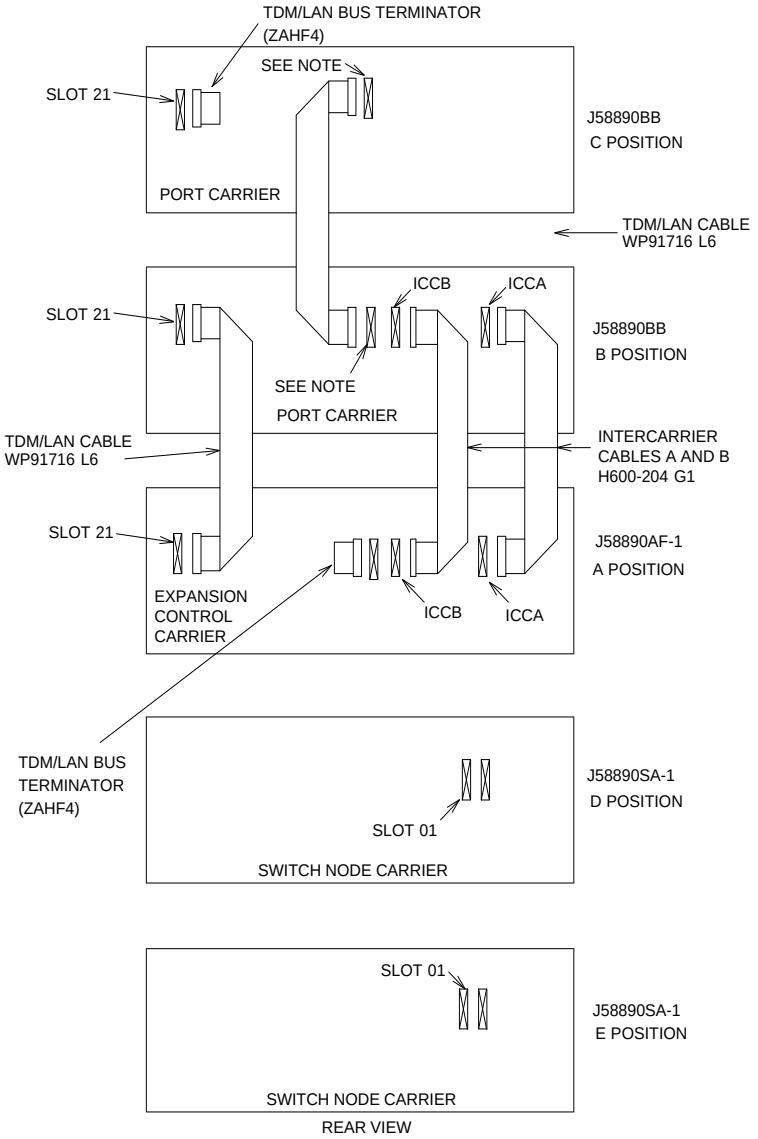

NOTE:

ON PORT CARRIER J68890BB-1, CONNECT TDM/LAN CABLE OR TDM/LAN TERMINATOR TO SLOT 02. ON PORT CARRIERS J58890BB-2 AND -3, CONNECT THE TDM/LAN CABLE OR TDM/LAN TERMINATOR TO SLOT 1.

Figure 10-34. TDM/LAN Connections for Critical-Reliability G3r EPN

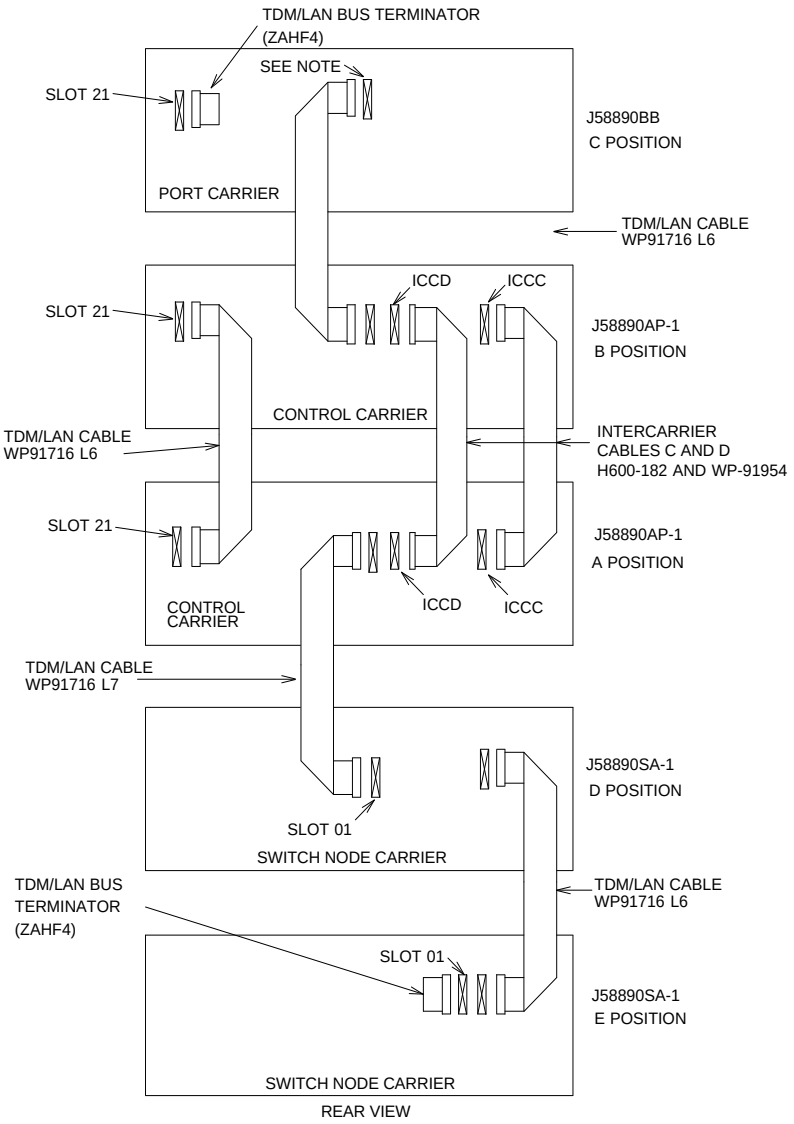

NOTE:

ON PORT CARRIER J68890BB-1, CONNECT TDM/LAN CABLE OR TDM/LAN TERMINATOR TO SLOT 02. ON PORT CARRIERS J58890BB-2 AND -3, CONNECT THE TDM/LAN CABLE OR TDM/LAN TERMINATOR TO SLOT 1.

Figure 10-35. TDM/LAN Connections for Critical-Reliability G3r PPN

Table 10-3. TDM/LAN Connections

"J" Number	Carrier Type	LHS Slot	RHS Slot
J58890BB-1	Port	21	02
J58890BB-2	Port	21	01
J58890BB-3	Port	21	01
J58890AP	Control	21	02

10. If a switched node carrier is being installed in the "D" position of an EPN, verify that the ZAHF4 TDM/LAN bus terminator is installed at slot "02" of expansion control carrier "A" (See Figure 10-34).

    If a switched node carrier is being installed in the "E" position of an EPN, verify that the ZAHF4 TDM/LAN bus terminator is installed at slot "21" of port carrier "D."

    For a PPN, install the ZAHF4 TDM/LAN bus terminator at slot "01" of switch node carrier "E" (See Figure 10-35).

11. Install the front trim plates on the "D" carrier.

12. Install the new power units into the "D" carrier. There are two different power units available. Two 631DA1s supply AC power, or two 644As supply DC power. One 631DA1 or 644A is installed on the left side, and the other 631DA1 or 644A is installed on the right side (See Figure 10-35).

13. Connect the power cords to the power units. The power cords are the white cables equipped with plugs that are run through the slots in the front of each carrier (See Figure 10-36).

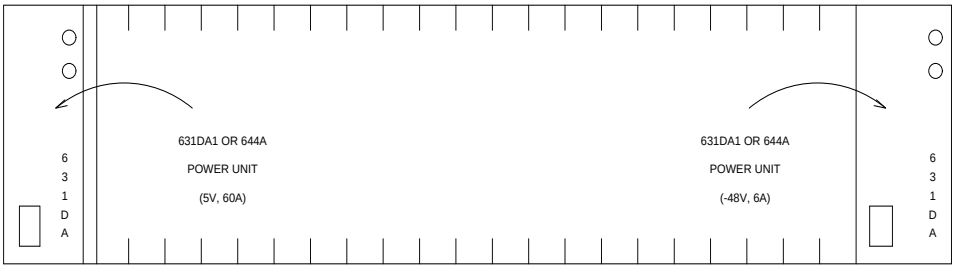

Figure 10-36. Locations of Power Units

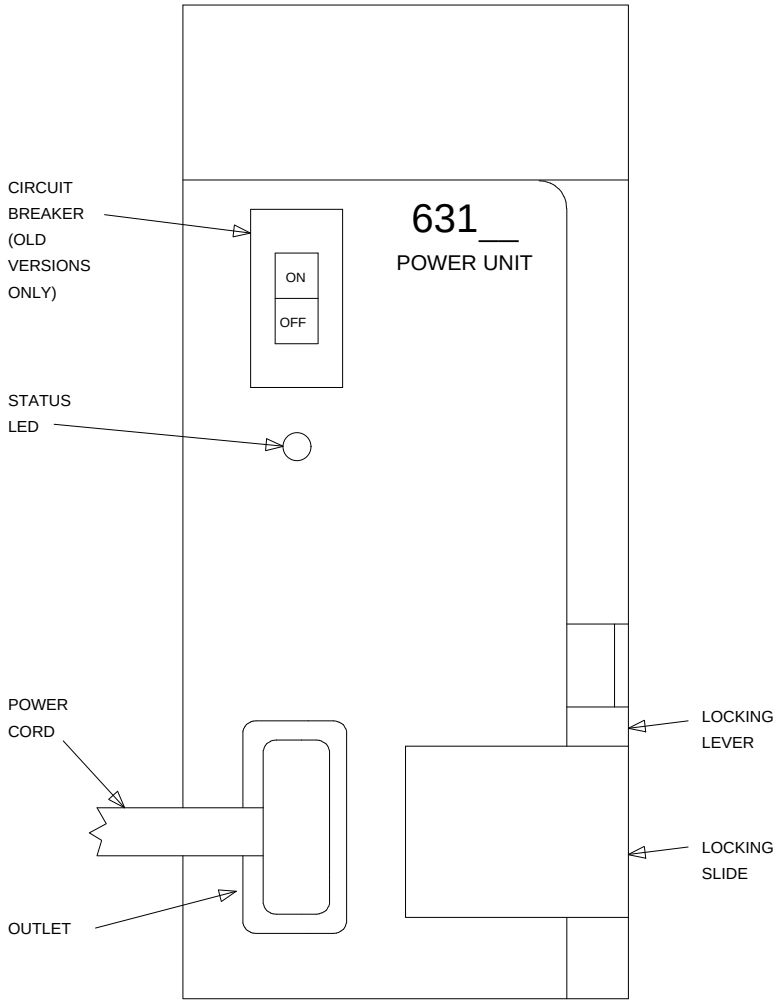

Figure 10-37. 631-Type Power Unit

Install Circuit Packs

See WARNING. Install the new G3r circuit packs into carrier ‘‘D.’’ Use Figure 10-38, the decal, and the upgrade configuration document (provided with the equipment) as a guide.

WARNING:
Before inserting or removing a circuit pack from a cabinet, put on a wrist strap and attach its plug or clip to the cabinet’s frame.

Install circuit-pack blanks in slots not equipped with circuit packs.

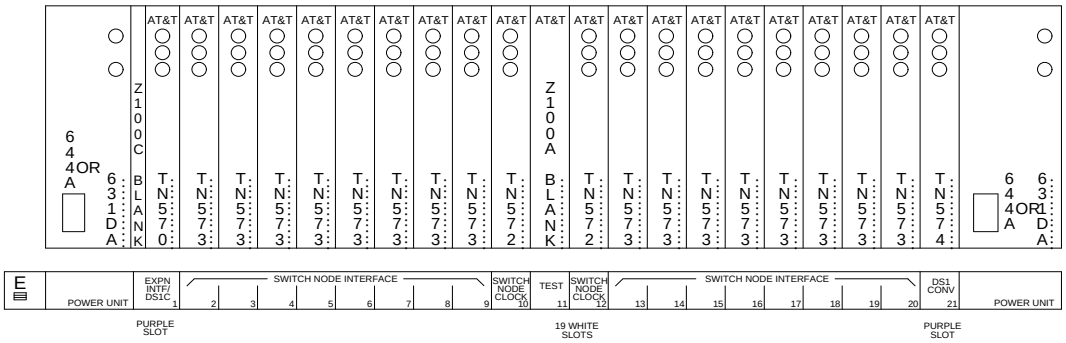

Figure 10-38. Circuit-Pack Locations in G3r Switch Node Carrier

Relocate Port Carrier D

Refer to the following section, "8. Add MCC Port Carriers" on page 10-66, for instructions to relocate the removed port carrier.

Interconnect Port Networks

1. Behind the PPN cabinet (See Figure 10-39):
   - Install a 9823-type lightwave transceiver on cable connector at slot 1E01.
   - Install a 9823-type lightwave transceiver on cable connector at slot 1E02.
   - Connect the metallic intracarrier cable to the lightwave transceivers at slots 1E01 and 1E02.

- Install a 9823-type lightwave transceiver on cable connector at slot 1D01.
- Install a 9823-type lightwave transceiver on cable connector at slot 1D02.
- Connect the metallic intracarrier cable to the lightwave transceivers at slots 1D01 and 1D02.

2. Behind switch node carrier E of PPN cabinet 1 (See Figure 10-39):
   - For each EPN, install one 9823-type lightwave transceiver on a cable connector with the following order of slots: 1E20, 1E03, 1E19, 1E04, 1E18, 1E05, etc.
   - Connect one end of each fiber-optic cable to each lightwave transceiver, just installed.
   - Delicately attach the fiber-optic cables (with cable ties) to the wall of the cable tray at the built-in cable-tie positions.
3. Behind control carrier A of each EPN cabinet:
   - Install the same kind (either 9823-A or 9823-B) of lightwave transceiver on cable connector at slot A01.
   - Connect the other end of the fiber-optic cable to the lightwave transceiver, just installed, at slot A01.
   - Delicately attach the fiber-optic cable (with cable ties) to the wall of the cable tray at the built-in cable-tie positions.
   - At the top of the cabinet, coil up the surplus length of fiber-optic cable, and delicately attach the coil to the wall of the cable tray.
4. Behind switch node carrier D of PPN cabinet 1 (See Figure 10-39):
   - For each EPN, install one 9823-type lightwave transceiver on a cable connector with the following order of slots: 1E20, 1E03, 1E19, 1E04, 1E18, 1E05, etc.
   - Connect one end of each fiber-optic cable to each lightwave transceiver, just installed.
   - Delicately attach the fiber-optic cables (with cable ties) to the wall of the cable tray at the built-in cable-tie positions.
5. Behind port carrier B of each EPN cabinet:
   - Install the same kind (either 9823-A or 9823-B) of lightwave transceiver on cable connector at slot B02.
   - Connect the other end of the fiber-optic cable to the lightwave transceiver, just installed, at slot B02.
   - Delicately attach the fiber-optic cable (with cable ties) to the wall of the cable tray at the built-in cable-tie positions.
   - At the top of the cabinet, coil up the surplus length of fiber-optic cable, and delicately attach the coil to the wall of the cable tray.

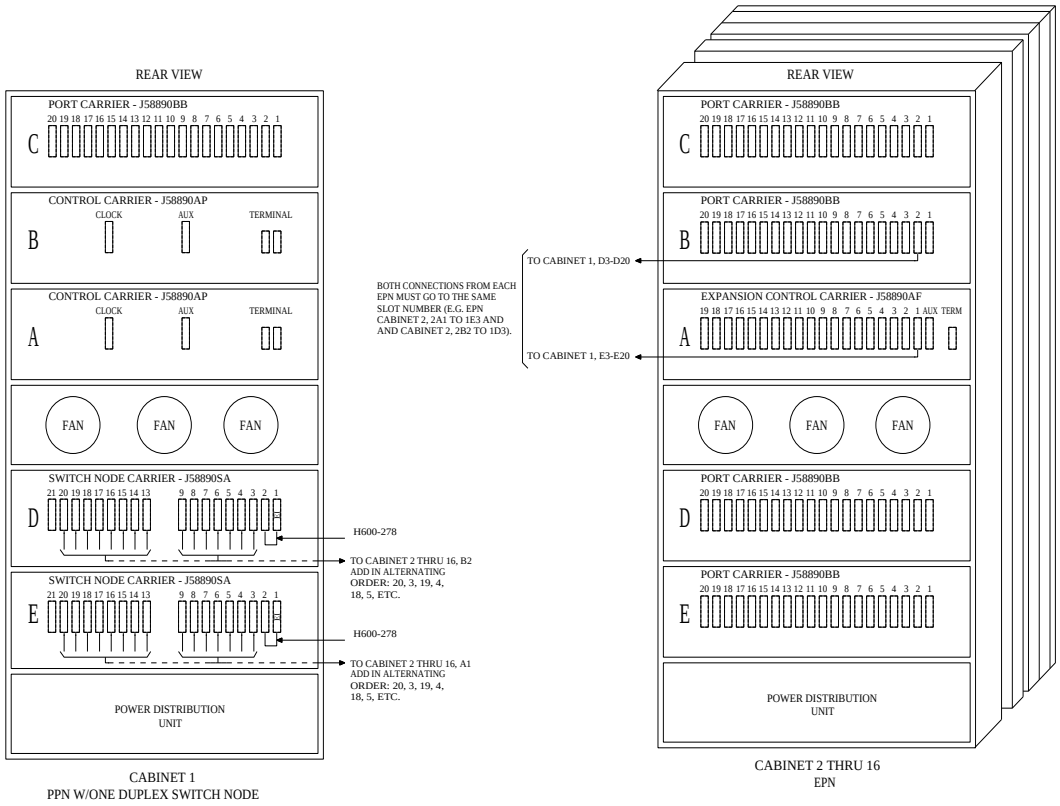

Figure 10-39. Critical-Reliability Fiber-Optic Connections through Center Stage Switch

Reseat DEFINITY AUDIX System

See WARNING. If a DEFINITY AUDIX System resides in the system, reseat the AUDIX assembly to its backplane connectors.

WARNING:
Before inserting or removing a circuit pack from a cabinet, put on a wrist strap and attach its plug or clip to the cabinet's frame.

Power Up System

1. At each EPN, if present, on the power-distribution unit, set the main circuit breaker to ON.
2. At the PPN, on the power-distribution unit, set the main circuit breaker to ON.
3. The system now goes through the level 4 rebooting process, loading the system program and default or current translations from the disk. Rebooting takes 5 to 11 minutes.

   NOTE:
   Ignore alarms for now.

   Refer to ''Initialization and Recovery'' and ''LED Interpretation'' chapters in DEFINITY Communications System Generic 3r V4 Maintenance, 555-230-105, Issue 4, for circuit-pack LED indications and G3-MT terminal displays that occur during system reboot.
4. If new tapes were made off-site at the FSAC or STS, insert them in the tape drives. Otherwise, make software modifications and then go to step 8.
5. Enter the reset system 4 tape command to copy the translations from tape to memory.
6. Remove the translated tapes and move the black write-protect slide to record.
7. Re-insert the write-enabled tapes into the drives.
8. Clear any alarms.
9. Enter the save translation [both] tape command if translation changes were made in step 8 above.
10. Enter the restore disk [both] full command to copy the translations from tape to disk.
11. After the system reboot is finished and all trouble cleared, verify that the EMERGENCY TRANSFER CONTROL switch is set to AUTO. This restores the system to the normal operating mode.

Enable PNC Duplication

Refer to Duplication-Related System Parameters in *DEFINITY Communications System Generic 3 V4 Implementation*, 555-230-655, to enable Port-Network Connectivity (PNC) duplication.

8. Add MCC Port Carriers

See NOTE. A new port carrier can be installed when additional features or equipment exceed the capacity of the present system. Port carriers are identified as B, C, D, and E except for a PPN cabinet with the duplication option. The ‘‘B’’ carrier is the second control carrier. PEC 63155 provides the necessary equipment for adding the carrier.

NOTE:
Add each new port carrier to a port network in the ‘‘B,’’ ‘‘C,’’ ‘‘D,’’ “E’’ order of carrier positions.

Service Interruption

Since the addition of port carriers requires a service interruption, notify the customer in advance as to when the addition will be carried out.

Verify System Status

Before proceeding, the system should be examined for alarms, and every problem should be corrected. The system must be alarm-free.

Save Translations

1. Log in at the G3-MT terminal.
2. If the system is high- or critical-reliability, enter **`status spe`**, and press (RETURN) to verify that the standby SPE is refreshed and that the standby disk is in service.
3. Enter **`save translation [spe-a or both] disk`**, and press (RETURN). This command instructs the system to take all translation information in memory and write it to the disk(s).
4. If the MCC port network contains a TN750 Announcement circuit pack, enter **`display announcements`**, and press (RETURN).

   If administered recorded announcements are listed, enter **`list configuration software-version`**, press (RETURN). Check Page 2 of this form to find out when the announcements were last saved, and ask the customer whether any announcements have changed since then.

If so, the current announcements can be saved using the save announcements command. Enter **`save announcements disk`**, and press (RETURN).

5. Enter **`backup disk [spe-a or both]`** and press (RETURN). This command instructs the system to backup the current information on disk to the system tape(s).
6. Update backup tape(s), if required.

Shut Down DEFINITY AUDIX System

1. See WARNING. If a DEFINITY AUDIX System resides in the MCC port network to be upgraded, shut down the AUDIX assembly and allow the disk to completely spin down.

   WARNING:
   Neglecting to shut down an AUDIX assembly before powering down the system cabinet where it resides can damage the AUDIX disk.

2. See WARNING. To avoid an unexpected AUDIX reboot after an unplanned switch reboot, unseat the AUDIX assembly from its backplane connectors.

   WARNING:
   Before inserting or removing a circuit pack from a cabinet, put on a wrist strap and attach its plug or clip to the cabinet's frame.

Power Down MCC Port Network

At the MCC port network, on the power-distribution unit, set the main circuit breaker to OFF.

Install Port Carrier

Behind the cabinet:

1. Open the rear doors.

At front of cabinet:

2. Remove the blank port-carrier panel by pushing outward on panel from the rear of the cabinet until the panel clears the four retaining pins on the cabinet frame (See Figure 10-40).
3. Use a screwdriver to loosen and remove the four retaining pins from the cabinet frame.
4. Align the carrier through the front of the system cabinet with four pilot holes on cabinet frame.

NOTE:
Support the carrier by the molded-in support pins above the top mounting holes.

5. Insert self-tapping screws in pilot holes and tighten.
6. Attach magnetically-held nomenclature panel to front of carrier.

Behind the cabinet:

7. Install eight grounding jumpers from the adjacent backplane to the new carrier backplane wiring (Figure 10-41 and Figure 10-42).
8. Connect a 9-pin D subminiature plug on right side of cabinet to P1 connector on carrier. If necessary, to get enough slack in the cable, cut the tie wrap holding the intercabinet cable to the upright in the area of the carrier being installed.
9. Connect the TDM/LAN cable to the newly installed port carrier (Figure 10-43, Figure 10-44, Figure 10-45, or Figure 10-46 and Table 10-4).

At front of cabinet:

10. Install a 631AR, 631WA1, 631DA1, or 644A power unit in the leftmost slot and a 631BR, 631WB1, 631DB1, or 645B power unit in the rightmost slot of installed port carrier as follows:
    a. Operate circuit breaker on power unit to be added to OFF position. (See Figure 10-47.)
    b. Turn power unit on side and ensure rocker switches 1 through 4 on DIP switch are as follows (See Note):

Switch	631BR, 631WB1, 631DB1 Position	631AR, 631WA, 631DA1 Position
1	Open	Open
2	Closed	Closed
3	Open	Open
4	Open	Closed

NOTE:
In the open position, the rocker is down on the side opposite the number. In the closed position, the rocker is down on the side adjacent the number.

c. Move locking slide on power unit to its leftmost position (See Figure 10-47) and open lever.

d. Align and slide power unit into slot in carrier until some resistance is felt.

e. Lift locking lever upward until it latches.

f. Move locking slide on power unit to its rightmost position (See Figure 10-47).

g. Connect a power cord inside the cabinet to outlet on power unit.

h. Operate circuit breaker on power unit to ON position.

11. Install a TN736 power converter in slot next to the 631AR power converter or a TN752 power converter in slot next to the 631WA1 power converter on left side of carrier.

NOTE:
The TN736 is not required when the 631DB1 power unit is used in the J58890BB-2 or J58890BB-3 port carriers. It is required in the J58890BB-1 port carrier regardless of which 631 power unit is provided. Use the TN752 or TN755 if the system is equipped with neon message waiting.

12. Install port packs in carrier.

13. Connect AC/DC power cords located inside cabinet to the power units.

Behind the cabinet:

14. Install rear panels around port carrier.

15. Install cables from port carrier to cross-connect field and cable access panel, as required.

Reseat DEFINITY AUDIX System

See WARNING. If a DEFINITY AUDIX System resides in the MCC port network, reseat the AUDIX assembly to its backplane connectors.

WARNING:
Before inserting or removing a circuit pack from a cabinet, put on a wrist strap and attach its plug or clip to the cabinet's frame.

Power Up MCC Port Network

1. At the MCC port network, on the power-distribution unit, set the main circuit breaker to ON.
2. The system now goes through the level 4 rebooting process, loading the system program and default translations from the disk. Rebooting takes 5 to 11 minutes.

   Refer to ''Initialization and Recovery'' and ''LED Interpretation'' chapters in *DEFINITY Communications System Generic 3r V4 Maintenance*, 555-230-105, Issue 4, for circuit-pack LED indications and G3-MT terminal displays that occur during system reboot.
3. After the system reboot is finished and all trouble cleared, verify that the EMERGENCY TRANSFER CONTROL switch is set to AUTO. This restores the system to the normal operating mode.

Enter Added Translations

Enter added translation data as applicable using *DEFINITY Communications System Generic 3 V4 Implementation*, 555-230-655.

Save Translations

1. If the system is high- or critical-reliability, enter **`status spe`**, and press (RETURN) to verify that the standby SPE is refreshed and that the standby disk is in service.
2. Enter **`save translation [spe-a or both] disk`**, and press (RETURN). This command instructs the system to take all translation information in memory and write it to the disk(s).
3. If the MCC port network contains a TN750 Announcement circuit pack, enter **`list configuration software-version`**, and press (RETURN).

   If Page 2 of this form shows that recorded announcements were saved, these announcements can be restored using the restore announcements command. Enter **`restore announcements [disk | tape]`**, and press (RETURN).
4. Enter **`backup disk [spe-a or both]`** and press (RETURN). This command instructs the system to backup the current information on disk to the system tape(s).
5. Update backup tape(s), if required.

Update Port-Assignment Records

Update the customer's port-assignment records.

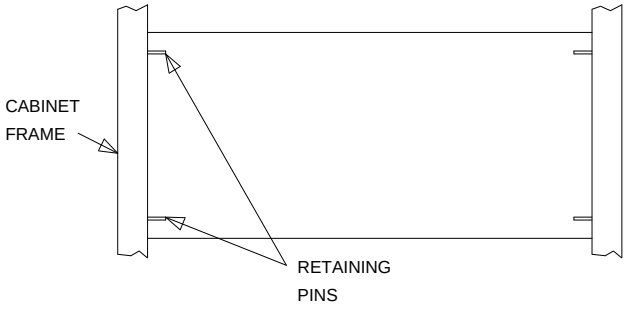

Figure 10-40. Blank Carrier Panel (Rear View)

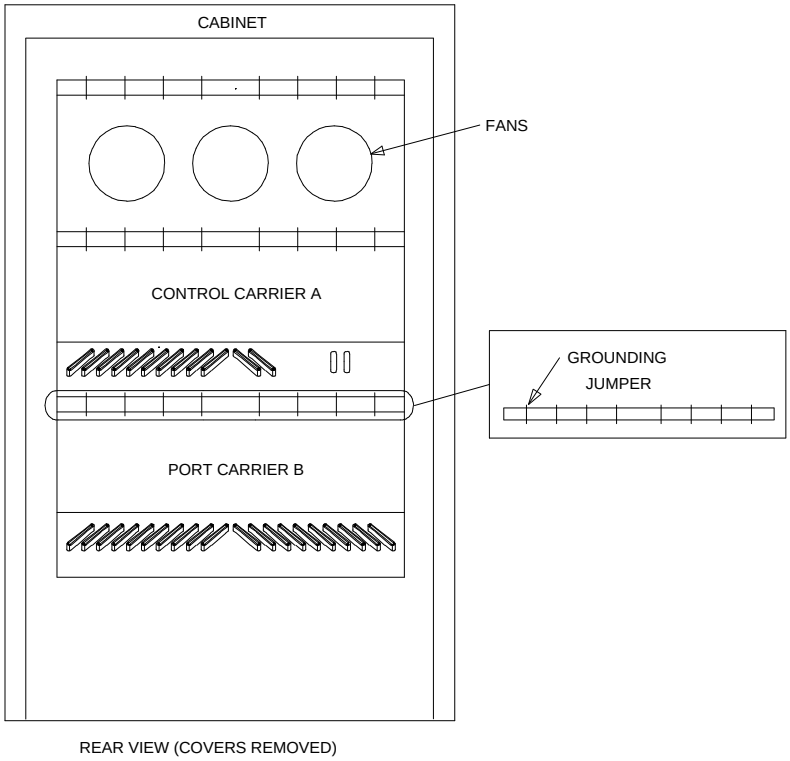

Figure 10-41. Locations of Grounding Jumpers (Small Cabinet)

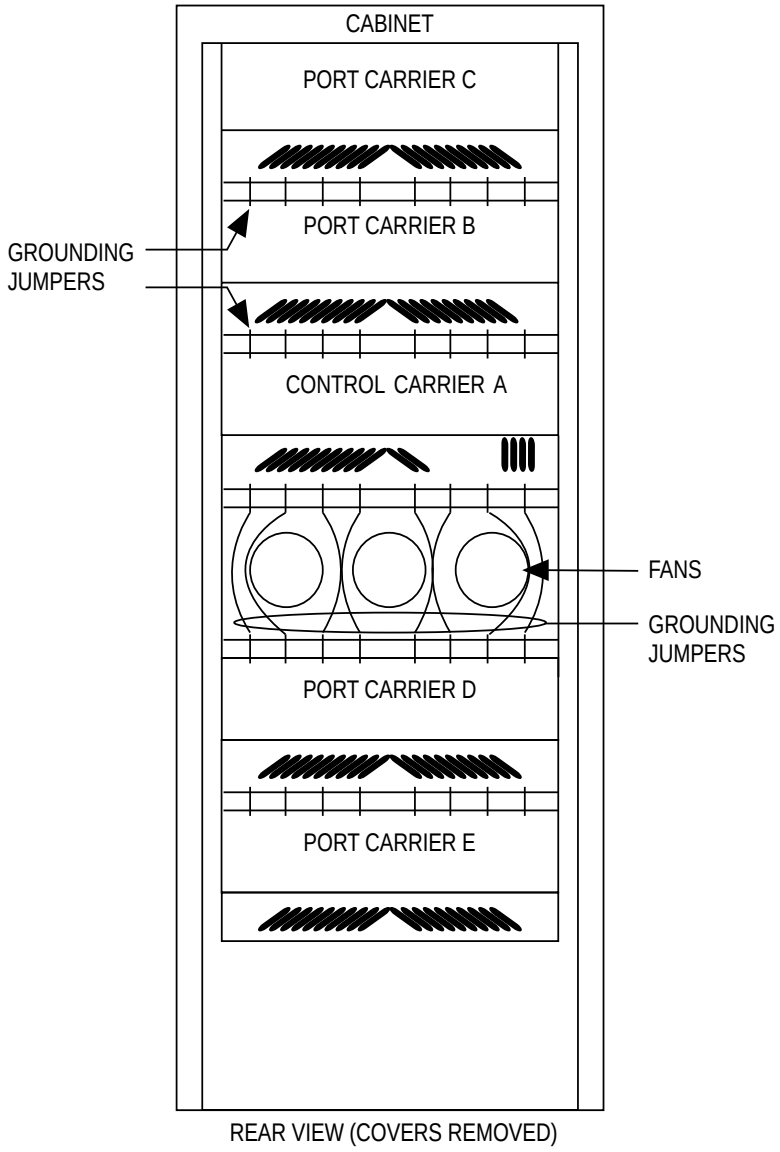

Figure 10-42. Locations of Grounding Jumpers

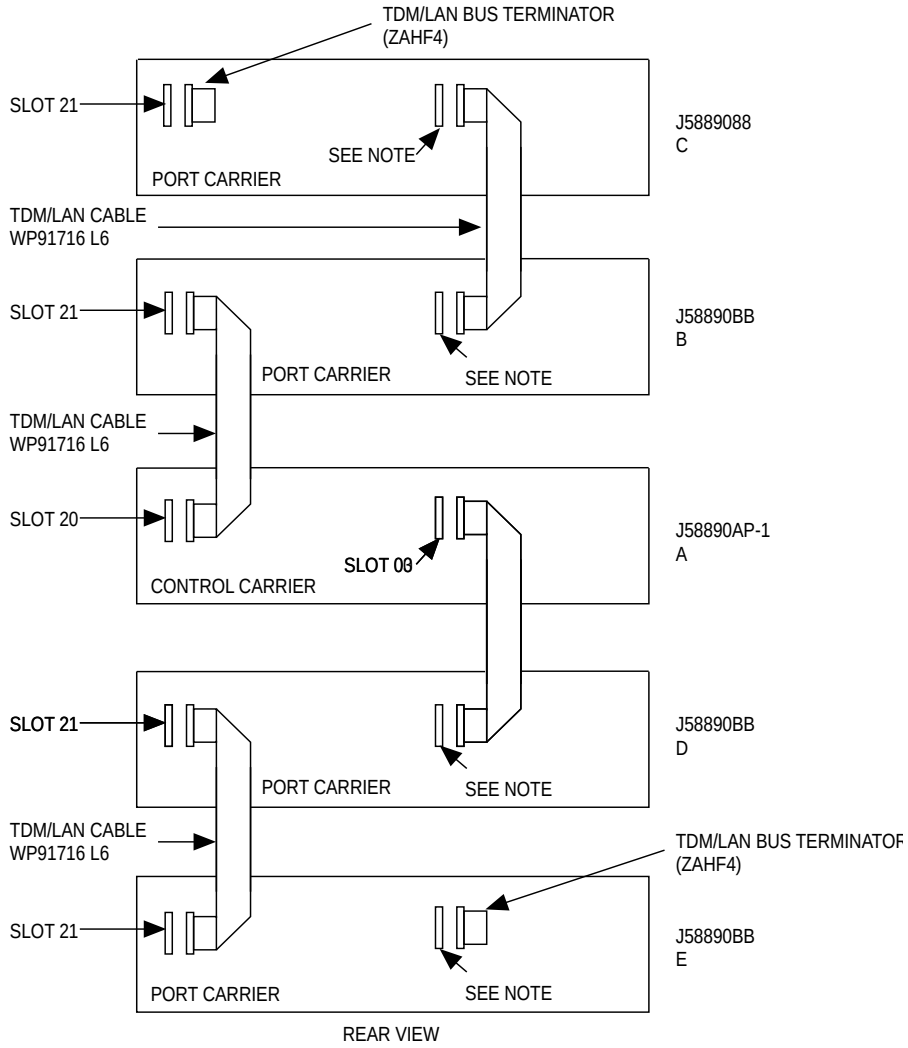

NOTE:

ON PORT CARRIER J58890BB-1, CONNECT THE TDM CABLE OR TDM TERMINATOR TO SLOT 02. ON PORT CARRIERS J58890BB-2 OR J58890BB-3, CONNECT THE TDM CABLES OR TDM TERMINATOR TO SLOT 01. IF THE PORT CARRIER HAS J58890BB-1 AND J58890BB-2 STENCILLED ON IT, TREAT IT AS A J58890BB-1

Figure 10-43. TDM/LAN Bus Connections for Standard-Reliability PPN

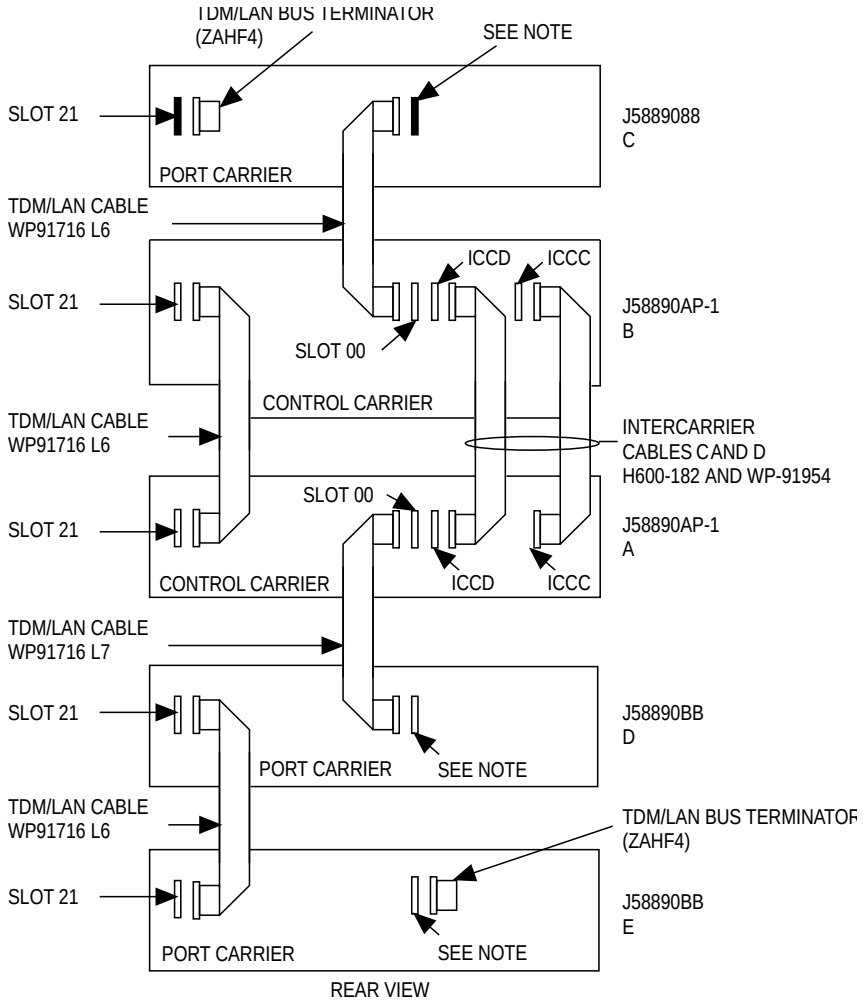

NOTE:

ON PORT CARRIER J58890BB-1, CONNECT THE TDM CABLE OR TDM TERMINATOR TO SLOT 02. ON PORT CARRIERS J58890BB-2 AND J58890BB-3, CONNECT THE TDM CABLES OR TDM TERMINATOR TO SLOT 01. IF THE PORT CARRIER HAS J58890BB-1 AND J58890BB-2 STENCILLED ON IT, TREAT IT AS A J58890BB-1.

Figure 10-44. TDM/LAN Bus Connections for Critical-Reliability PPN

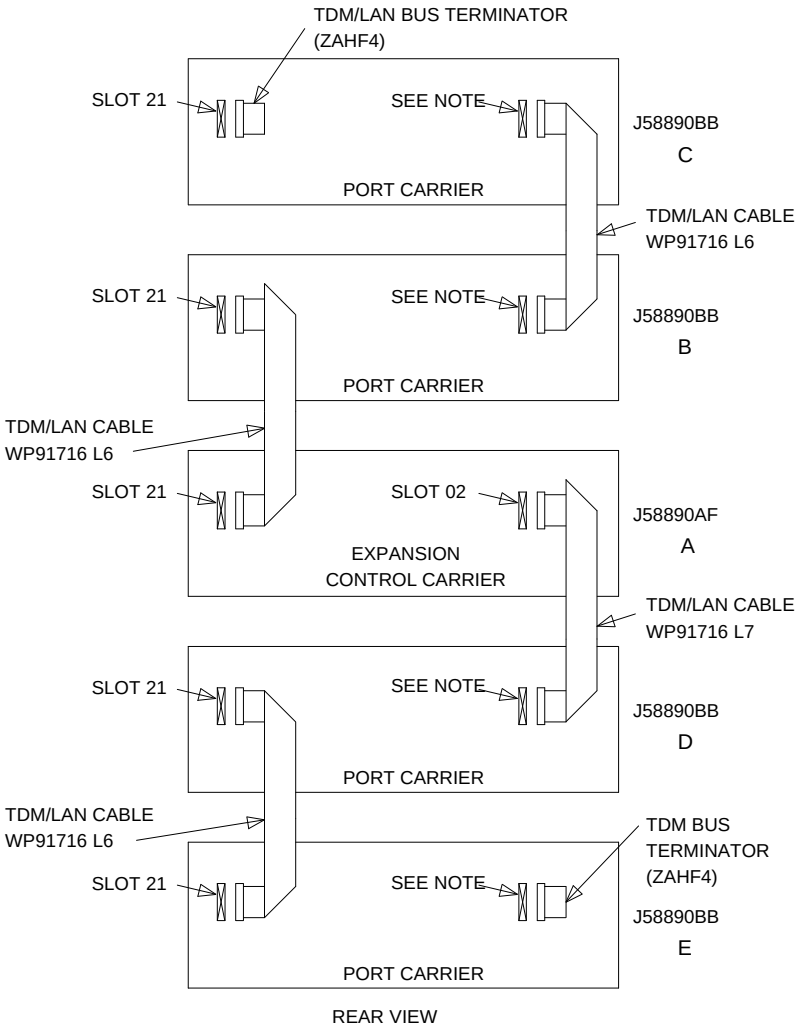

NOTE:
ON PORT CARRIER J58890BB-1, CONNECT THE TDM CABLE OR TDM TERMINATOR TO SLOT 02.
ON PORT CARRIERS J58890BB-2 AND -3, CONNECT THE TDM CABLES TO SLOT 01.

Figure 10-45. TDM/LAN Bus Connections for Standard- or High-Reliability EPN

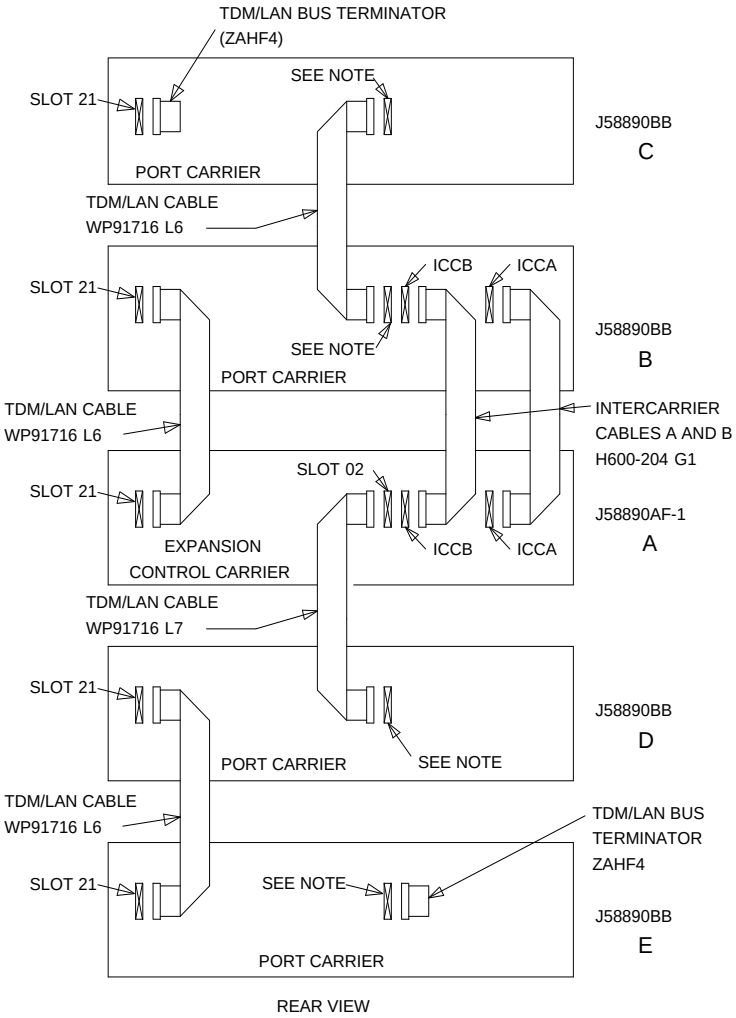

NOTE:
ON PORT CARRIER J58890BB-1, CONNECT TDM/LAN CABLE OR TDM/LAN TERMINATOR TO SLOT 02.
ON PORT CARRIERS J58890BB-2 AND -3, CONNECT THE TDM/LAN CABLE OR TDM/LAN TERMINATOR TO SLOT 01.

Figure 10-46. TDM/LAN Bus Connections for Critical-Reliability EPN

Table 10-4. TDM/LAN Cable Connections

"J" Number	Carrier Type	LHS Slot	RHS Slot
J58890BB-1	Port	21	02
J58890BB-2	Port	21	01
J58890BB-3	Port	21	01
J58890AP	PPN Control "A" or "B"	20	03
J58890AF	AC EPN Control "A"	21	02
J58890AF	DC EPN Control "A"	21	02

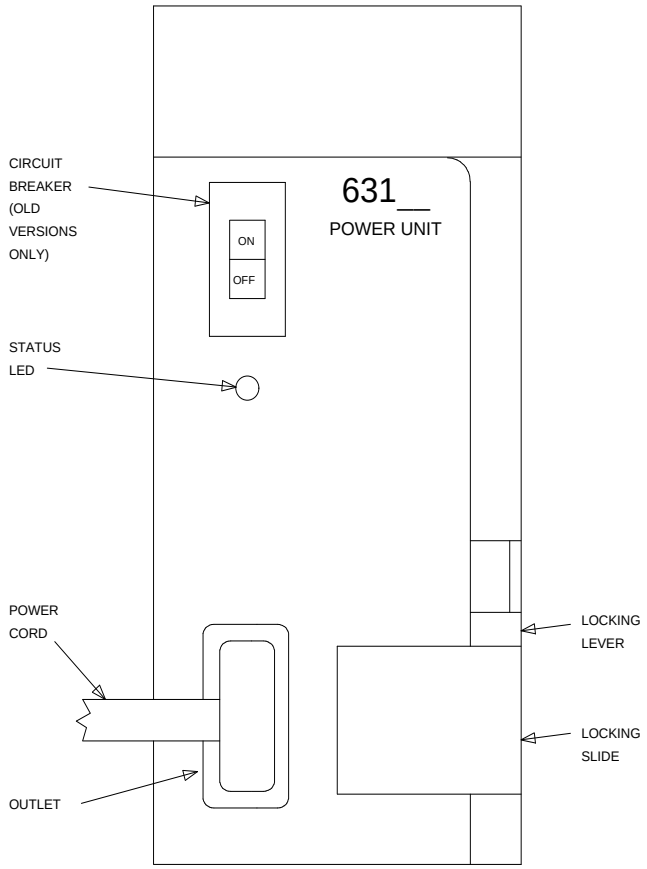

Figure 10-47. 631-Type Power Unit

9. Add Circuit Packs

When installing additional features or equipment, it may be necessary to install additional port circuit packs. This is a general procedure that must be used when adding features or equipment that requires adding circuit packs.

1. See WARNING. Lift up on bottom of circuit-pack blank and pull forward.

   WARNING:
   Before inserting or removing a circuit pack from a cabinet, put on a wrist strap and attach its plug or clip to the cabinet's frame.

2. Align and slide circuit pack with latch lever opened into slot in carrier until some resistance is felt.
3. Lift locking lever upward until latch pin engages (See Figure 10-48).

See NOTES. To find specific circuit-pack locations in the various carriers refer to:

- Figure 10-49 through Figure 10-52 and Table 10-5 through Table 10-8 for G3r MCC carriers
- Figure 10-53 through Figure 10-54 and Table 10-9 through Table 10-10 for G3r single-carrier cabinets

NOTE:
Only port circuit packs with clear North American applications are included in these tables. For information about international port circuit packs, refer to *DEFINITY G3 System Description and Specifications*, 555-230-206. For information about connecting and administering international circuit packs, refer to the Application Notes (Appendix B) in *DEFINITY Communications System Generic 3 V4 Implementation*, 555-230-655.

NOTE:
Throughout these figures and tables, the circuit-pack codes (for example, TN1657 or TN1650B) are shown with the *minimum acceptable* alphabetic suffix (like the ''B'' in the code ''TN1650B'').

Generally (if not always), an alphabetic suffix higher than the one shown is also acceptable. However, not every *vintage* of either the minimum-suffix or a higher-suffix code is necessarily acceptable. Refer to *Technical Monthly*, Reference Guide for Circuit-Pack Vintages and Change Notices, for current information about the usable vintages of specific circuit-pack codes (including the suffix) in a G3r system.

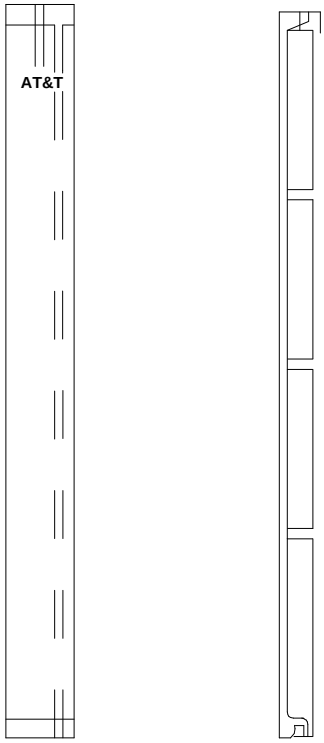

Figure 10-48. Blank Circuit-Pack Faceplate

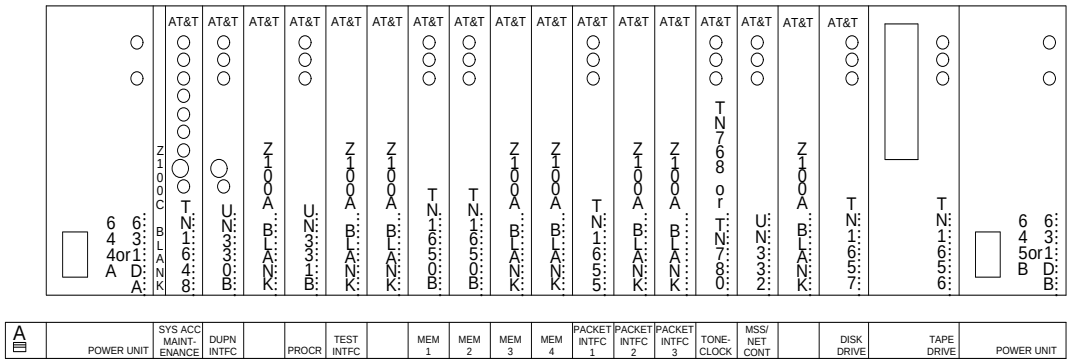

Figure 10-49. Circuit-Pack Locations in Duplicated G3r Control Carrier

Table 10-5. Circuit Packs in G3r Control Carrier (J58890AP)

	Code	Slot Location	Notes
Power Unit (AC, +5V)	631DA1	POWER UNIT (left side)	Required for AC
Power Unit (AC, -48V/-5V)	631DB1	POWER UNIT (right side)	Required for AC
Power Unit (DC, +5V)	644A1	POWER UNIT (left side)	Required for DC
Power Unit (DC, -48V/-5V)	645B1	POWER UNIT (right side)	Required for DC
Disk Drive	TN1657	DISK DRIVE	Required
Duplication Interface	UN330B	DUPN INTFC	Optional (Note 1)
Memory (32 Mbytes)	TN1650B	MEMORY, 1 to 4	Two required
Mass Storage System	UN332	MSS/NET CONT	Required
Network Control Packet Interface	TN1655	PACKET INTFC, 1 to 3	One required
Processor (RISC)	UN331B		Required
System Access and Maintenance	TN1648	SYS ACCESS-MAINTENANCE	Required
Tape Drive	TN1656	TAPE DRIVE	Required
Tone-Clock or Tone-Clock	TN768 or TN780 TN2182	TONE-CLOCK TONE-CLOCK	Required (Note 2) 3

Notes:

1. Required for a high- or critical-reliability system.
2. TN780 required for a Stratum 3 clock. Special connections are required; See ‘‘43. Add Stratum 3 Clock’’ later in this chapter.

3. Also required to provide international tones for G3r system.
4. The TN2182 Tone-Clock provides tone detection, tone generation, and tone-clock in one circuit pack, and it replaces the TN756, TN768, and TN780 circuit packs, while providing the same functionality as the TN748 and TN420 circuit packs.

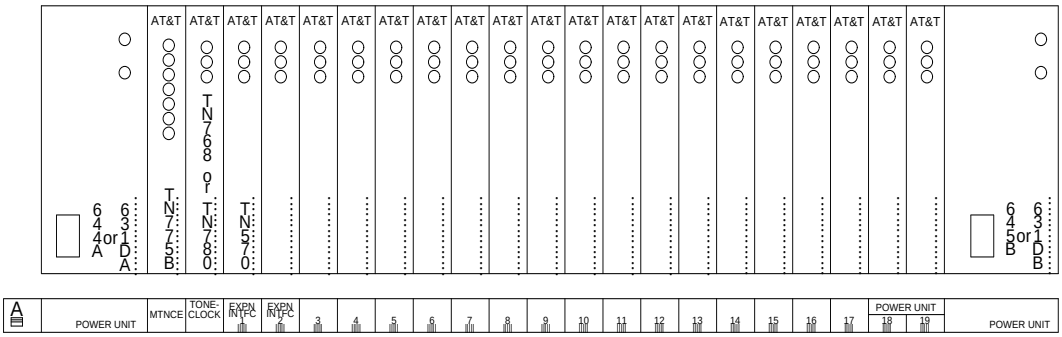

Figure 10-50. Circuit-Pack Locations in G3r Expansion Control Carrier

Table 10-6. Circuit Packs in G3r Expansion Control Carrier (J58890AF)

Name	Code	Slot Location	Notes
Power Unit (AC, +5V)	631DA1, 631WA1, or 631AR1	POWER UNIT (left side)	Required for AC
Power Unit (AC) (-48V/-5V)	631DB1, 631WB1, or 631BR1	POWER UNIT (right side	Required for AC
Power Unit	TN736	18 and 19	Required with 631BR1 or 631WB1
Neon Power Unit	TN752 or TN755	18 and 19	Optional
Power Unit (DC, +5V)	644A1	POWER UNIT (left side)	Required for DC
Power Unit (DC) (-48V/-5V)	645B1	POWER UNIT (right side)	Required for DC
Ring Generator	(TN2202)	POWER UNIT	11
Expansion Interface	TN570	EXPN INTFC/1	Required

Continued on next page

Table 10-6. Circuit Packs in G3r Expansion Control Carrier (J58890AF) — *Continued*

Name	Code	Slot Location	Notes
Expansion Interface	TN570	EXPN INTFC/2	Optional
Call-Classifier-Detector	TN744C	2 to 19	
Call Classifier	TN744	POWER UNIT 18 and 19	Optional (Note 1)
Announcement	TN750C	2 to 19	Note 12
Announcement	TN750	POWER UNIT 18 to 19	Optional
Tone Detector	TN748B	POWER UNIT 18 to 19	Optional (Note 2)
Maintenance	TN775B	MAINTENANCE	Required
Tone-Clock or Tone-Clock or Tone-Clock	TN768 TN780 TN2182	TONE-CLOCK TONE-CLOCK TONE-CLOCK	Required (Notes 3, 9) Note 9 Note 10
DCP Interface (2-Wire, 16 Port)	TN2181	2 to 19	
Data Line	TN726	2 to 19	Optional (Note 4)
ISDN-BRI Line (2-Wire)	TN2198	2 to 19	
ISDN BRI Line	TN556	2 to 19	Optional
Packet Data Line	TN553	2 to 19	Optional
Packet Gateway	TN577	2 to 19	Optional
Pooled Modem	TN758	2 to 19	Optional
Analog Line (16-Port)	TN2183	2 to 19	
Analog Line	TN742, TN746, or TN769	2 to 19	Optional (Note 5)
Digital Line	TN754, B	2 to 19	Optional
Hybrid Line	TN762B	2 to 19	Optional
MET Line	TN735	2 to 19	Optional
DS1 Converter	TN574	2 to 19	Optional
Auxiliary Trunk	TN763	2 to 19	Optional (Note 6)
Loop-Start CO Trunk	TN465C	2 to 19	
CO Trunk	TN747	2 to 19	Optional (Note 7)
DID Trunk	TN753	2 to 19	Optional
DIOD Trunk	(TN2184)	2 to 19	
DS1 Interface	TN767C	2 to 19	Optional

Continued on next page

Table 10-6. Circuit Packs in G3r Expansion Control Carrier (J58890AF) — *Continued*

Name	Code	Slot Location	Notes
DS1/E1 Interface	TN464C	1 to 20	Optional for E1 span or for ISDN—PRI
DS1 Tie Trunk	TN722	2 to 19	Optional
Tie Trunk	TN760	2 to 19	Optional (Note 8)
DEFINITY	None	2 to 19	Optional
AUDIX System			

Notes:

1. Required for Call Prompting answer detection or with OCM.
2. A TN748C is required for ACD and OCM applications.
3. A TN780 is required to provide international tones for G3r system.
4. A TN726B (and a TN553) is required for a G3r system-access port.
5. A TN746B is required to provide the complete set of analog line functions with a 16-port analog pack.
6. Use a TN763B to connect an AUDICHRON announcement machine.
7. Use a TN747B to provide abandon call search for the ACD feature.
8. Use a TN760B for the CAS feature.
9. Use TN780 as Tone-Clock for Stratum 3 timing. Also required with the TN780 are the TN748, and TN744 for tone-detection.
10. The TN2182 Tone-Clock provides tone detection, tone generation, and tone-clock in one circuit pack, and it replaces the TN756, TN768, and TN780 circuit packs, while providing the same functionality as the TN748 and TN420 circuit packs.
11. Required for ring generation in France.
12. TN750C is required if your system will have multiple announcement boards. To use multiple announcement boards, you must have G3V4 software, and at least one TN750C (up to ten are allowed). Only one TN750/B may be present in the system when a TN750C is used. The announcements from a TN750/B can be saved and restored to a TN750C — but once the announcements are recorded onto a TN750C, do not copy announcements from a TN750C to a TN750 or TN750B, as it may corrupt the announcement data.

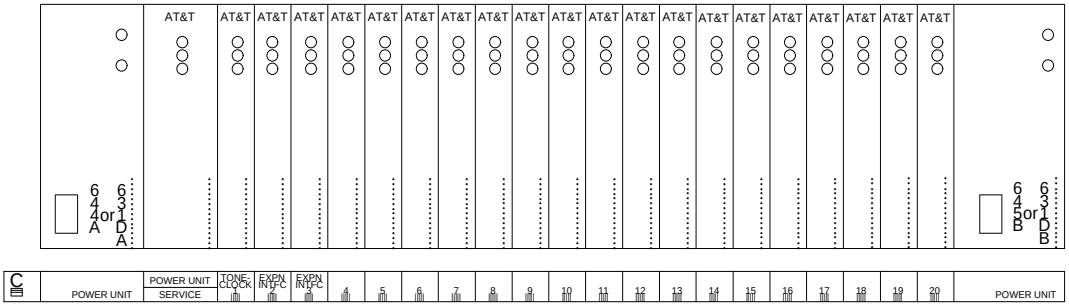

Figure 10-51. Circuit-Pack Locations in G3r Port Carrier

Table 10-7. Circuit Packs in G3r Port Carrier (J58890BB)

Name	Code	Slot Location	Notes
Power Unit (AC, +5V)	631DA1, 631WA1, or 631AR1	POWER UNIT (left side)	Required for AC
Power Unit (AC) (-48V/-5V)	631DB1, 631WB1, or 631BR1	POWER UNIT (right side)	Required for AC
Power Unit	TN736	18 and 19	Required in J58890BB-1, or with 631BR1 or 631WB1
Neon Power Unit	TN752 or TN755	18 and 19	Optional
Power Unit (DC, +5V)	644A1	POWER UNIT (left side)	Required for DC
Power Unit (DC) (-48V/-5V)	645B1	POWER UNIT (right side)	Required for DC
Ring Generator	(TN2202)	POWER UNIT	Note 13
Expansion Interface	TN570	EXPN INTFC/1-2	Optional
Call-Classifier-Detector	TN744C	1- 20	
Call Classifier	TN744	POWER UNIT/ SERVICE, 1-20	Optional (Note 1)
Announcement	TN750C	1- 20	Note 14
Announcement	TN750	POWER UNIT/	Optional

Continued on next page

Table 10-7. Circuit Packs in G3r Port Carrier (J58890BB) — *Continued*

Name	Code	Slot Location	Notes
		SERVICE, 1-20	
Maintenance/Test	TN771C	POWER UNIT/ SERVICE, 1-20	Optional
Speech Synthesizer	TN725B	POWER UNIT/ SERVICE, 1-20	Optional
Tone Detector	TN748B	POWER UNIT/ SERVICE, 1-20	Optional (Note 2)
Tone-Clock or Tone-Clock or Tone-Clock	TN768 TN780 TN2182	TONE-CLOCK TONE-CLOCK TONE-CLOCK	Required (Note 3) 11 Note 12
DCP Interface (2-Wire, 16 Port)	TN2181	1- 20	
Data Line	TN726	1 to 20	Optional (Note 4)
ISDN-BRI Line (2-Wire)	TN2198	1 to 20	
ISDN BRI Line	TN556	1 to 20	Optional
Packet Data Line	TN553	1 to 20	Optional
Packet Gateway	TN577	1 to 20	Optional
Pooled Modem	TN758	1 to 20	Optional
Analog Line (16-Port)	TN2183	1 to 20	
Analog Line	TN742, TN746, or TN769	1 to 20	Optional (Note 5)
Digital Line	TN754	1 to 20	Optional
Hybrid Line	TN762B	1 to 20	Optional
MET Line	TN735	1 to 20	Optional
DS1 Converter	TN574	1 to 20	Optional
Auxiliary Trunk	TN763	1 to 20	Optional (Note 6)
Loop-Start CO Trunk	TN465C	1 to 20	
CO Trunk	TN747	1 to 20	Optional (Note 7)
DID Trunk	TN753	1 to 20	Optional
DIOD Trunk	(TN2184)	1 to 20	
DS1 Interface	TN767C	1 to 20	Optional
DS1/E1 Interface	TN464C	1 to 20	Optional for E1 span or for ISDN—PRI

Continued on next page

Table 10-7. Circuit Packs in G3r Port Carrier (J58890BB) — *Continued*

Name	Code	Slot Location	Notes
DS1 Tie Trunk	TN722	1 to 20	Optional
Tie Trunk	TN760	1 to 20	Optional (Note 8)
DEFINITY AUDIX System	None	1 to 20	Optional (Note 9)

Notes:

1. Required for Call Prompting answer detection or with OCM.
2. A TN748C is required for ACD and OCM applications.
3. A TN768 or TN780 is required only if the port carrier resides in position B of a critical-reliability EPN cabinet.
4. A TN780 is required to provide international tones for G3r system.
5. A TN726B (and a TN553) is required for a G3r system-access port.
6. A TN746B is required to provide the complete set of analog line functions with a 16-port analog pack.
7. Use a TN763B to connect an AUDICHRON announcement machine.
8. Use a TN747B to provide abandon call search for the ACD feature.
9. Use a TN760B for the CAS feature.
10. For adequate cooling, never locate a DEFINITY AUDIX System in port carrier "C."
11. Use TN780 as Tone-Clock for Stratum 3 timing. Also required with the TN780 are the TN748, and TN744 for tone-detection.
12. The TN2182 Tone-Clock provides tone detection, tone generation, and tone-clock in one circuit pack, and it replaces the TN756, TN768, and TN780 circuit packs, while providing the same functionality as the TN748 and TN420 circuit packs.
13. Required for ring generation in France.
14. TN750C is required if your system will have multiple announcement boards. To use multiple announcement boards, you must have G3V4 software, and at least one TN750C (up to ten are allowed). Only one TN750/B may be present in the system when a TN750C is used. The announcements from a TN750/B can be saved and restored to a TN750C — but once the announcements are recorded onto a TN750C, do not copy announcements from a TN750C to a TN750 or TN750B, as it may corrupt the announcement data.

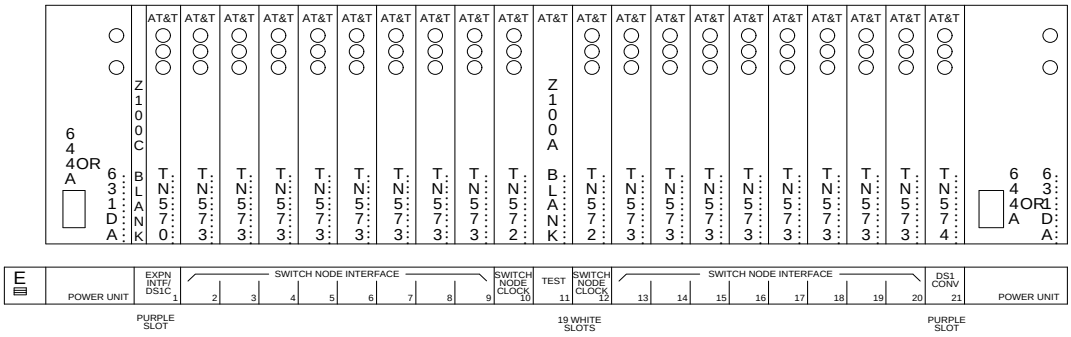

Figure 10-52. Circuit-Pack Locations in G3r Switch Node Carrier

Table 10-8. Circuit Packs in G3r Switch Node Carrier (J58890SA)

Name	Code	Slot Location	Notes
Power Unit (AC, +5V)	631DA1	POWER UNIT (both sides)	Required for AC
Power Unit (DC, +5V)	644A1	POWER UNIT (both sides)	Required for DC
DS1 Converter	TN574	DS1 CONV	Optional
Expansion Interface	TN570	EXPN INTFC	Used when SN carrier is in critical-reliability PPN
SN Clock	TN572	SWITCH NODE CLOCK 10 and 12 (required in SNs in critical reliability systems)	Required
SN Interface	TN573	SWITCH NODE INTERFACE 2 to 9, and 13 to 20	One per PN, or one per interSN-to-SN link

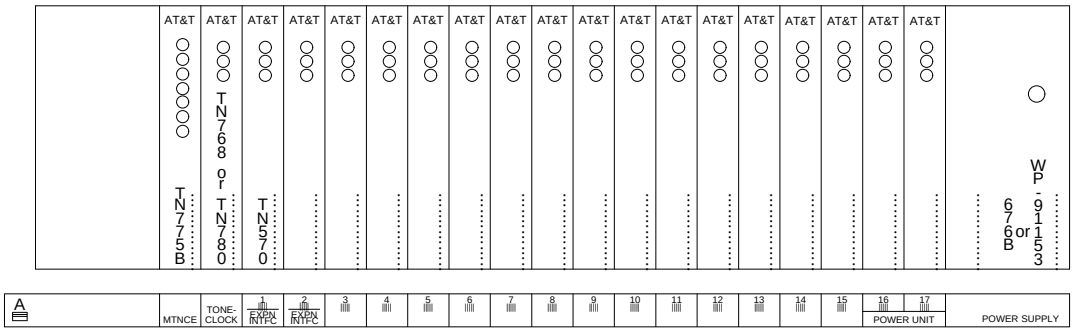

Figure 10-53. Circuit-Pack Locations in G3r Expansion Control Cabinet

Table 10-9. Circuit Packs in G3r Expansion Control Cabinet (J58890N)

Name	Code	Slot Location	Notes
Expansion Interface	TN570	1/EXPN INTFC	Required
Expansion Interface	TN570	2/EXPN INTFC	Optional
Maintenance	TN775B	MAINTENANCE	Required
Neon Power Unit	TN755	POWER UNIT (16 and 17)	Optional
Announcement	TN750C	2 to 17	Note 12
Announcement	TN750	2 to 17	Optional
Speech Synthesizer	TN725B	2 to 17	Optional
Power Supply (+5V/-48V/-5V/+12V)	WP-91153	POWER SUPPLY	Required for AC
Power Supply (DC) (+5V/-48V/-5V/+12V)	676B	POWER SUPPLY	Required for DC
Ring Generator	(TN2202)	POWER SUPPLY	Note 11
Tone-Clock or Tone-Clock or Tone-Clock	TN768 TN780 TN2182	TONE-CLOCK TONE-CLOCK TONE-CLOCK	Required (Note 1, 10) Note 9 Note 10
DCP Interface (2-Wire, 16 Port)	TN2181	2 to 17	
Data Line	TN726	2 to 17	Optional (Note 2)

Continued on next page

Table 10-9. Circuit Packs in G3r Expansion Control Cabinet (J58890N) — *Continued*

Name	Code	Slot Location	Notes
ISDN-BRI Line (2-Wire)	TN2198	2 to 17	
ISDN BRI Line	TN556	2 to 17	Optional
Packet Data Line	TN553	2 to 17	Optional
Packet Gateway	TN577	2 to 17	Optional
Pooled Modem	TN758	2 to 17	Optional
Analog Line (16-Port)	TN2183	2 to 17	
Analog Line	TN742, TN746, or TN769	2 to 17	Optional (Note 3)
Digital Line	TN754	2 to 17	Optional
Hybrid Line	TN762B	2 to 17	Optional
MET Line	TN735	2 to 17	Optional
DS1 Converter	TN574	2 to 17	Optional
Auxiliary Trunk	TN763	2 to 17	Optional (Note 4)
Loop-Start CO Trunk	TN465C	2 to 17	
CO Trunk	TN747	2 to 17	Optional (Note 5)
DID Trunk	TN436B, TN459B, TN753	2 to 17	Optional
DIOD Trunk	(TN2184)	2 to 17	
DS1 Interface	TN767C	2 to 17	Optional
DS1 Tie Trunk	TN722	2 to 17	Optional
Tie Trunk	TN760	2 to 17	Optional (Note 6)
DS1/E1 Interface	TN464C	2 to 17	Optional for E1 span or for ISDN—PRI
Call-Classifier-Detector	TN744C	2 to 17	
Call Classifier	TN744	2 to 17	Optional (Note 7)
Tone Detector	TN748B	2 to 17	Optional (Note 8)
DEFINITY AUDIX System	None	4 to 17	Optional

Notes:

1. A TN780 is required to provide international tones for G3r system.
2. A TN726B (and a TN553) is required for a G3r system-access port.
3. A TN746B is required to provide the complete set of analog line functions with a 16-port analog pack.

4. Use a TN763B to connect an AUDICHRON announcement machine.
5. Use a TN747B to provide abandon call search for the ACD feature.
6. Use a TN760B for the CAS feature.
7. Required for Call Prompting answer detection or with OCM.
8. A TN748C is required for ACD and OCM applications.
9. Use TN780 as Tone-Clock for Stratum 3 timing. Also required with the TN780 are the TN748, and TN744 for tone-detection.
10. The TN2182 Tone-Clock provides tone detection, tone generation, and tone-clock in one circuit pack, and it replaces the TN756, TN768, and TN780 circuit packs, while providing the same functionality as the TN748 and TN420 circuit packs.
11. Required for ring generation in France.
12. TN750C is required if your system will have multiple announcement boards. To use multiple announcement boards, you must have G3V4 software, and at least one TN750C (up to ten are allowed). Only one TN750/B may be present in the system when a TN750C is used. The announcements from a TN750/B can be saved and restored to a TN750C — but once the announcements are recorded onto a TN750C, do not copy announcements from a TN750C to a TN750 or TN750B, as it may corrupt the announcement data.

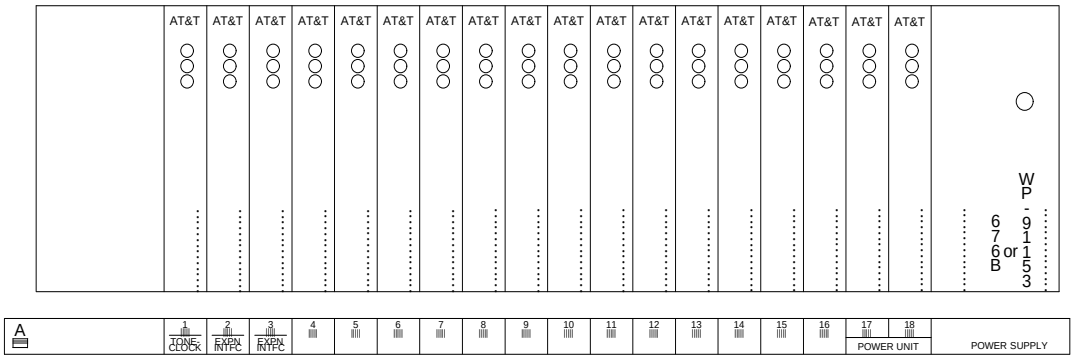

Figure 10-54. Circuit-Pack Locations in G3r Port Cabinet

Table 10-10. Circuit Packs in G3r Port Cabinet (J58890H)

Name	Code	Slot Location	Notes
Neon Power Unit	TN755	POWER UNIT (17 and 18)	Optional
Power Supply (AC) (+5V/-48V/-5V/+12V)	WP-91153	POWER SUPPLY	Required for AC
Power Supply (DC) (+5V/-48V/-5V/+12V)	676B	POWER SUPPLY	Required for DC
Ring Generator	(TN2202)	POWER SUPPLY	Note 10
Tone-Clock	TN768	TONE-CLOCK	Required (Note 1, 9)
Tone-Clock	TN780	TONE-CLOCK	Note 8
Tone-Clock	TN2182	TONE-CLOCK	Note 9
Expansion Interface	TN570	EXPN INTFC	Optional
DCP Interface (2-Wire, 16 Port)	TN2181	1to 18	
Data Line	TN726	1 to 18	Optional (Note 2)
ISDN-BRI Line (2-Wire)	TN2198	1to 18	
ISDN BRI Line	TN556	1 to 18	Optional
Packet Data Line	TN553	1 to 18	Optional
Packet Gateway	TN577	1 to 18	Optional
Pooled Modem	TN758	1 to 18	Optional
Analog Line (16-Port)	TN2183	1 to 18	
Analog Line	TN742, TN746, or TN769,	1 to 18	Optional (Note 3)
Digital Line	TN754	1 to 18	Optional

Table 10-10. Circuit Packs in G3r Port Cabinet (J58890H)

Name	Code	Slot Location	Notes
Hybrid Line	TN762B	1 to 18	Optional
MET Line	TN735	1 to 18	Optional
DS1 Converter	TN574	1 to 18	Optional
Auxiliary Trunk	TN763	1 to 18	Optional (Note 4)
Loop-Start CO Trunk	TN465C	1to 18	
CO Trunk	TN747	1 to 18	Optional (Note 5)
DIOD Trunk	(TN2184)	1 to 18	
DID Trunk	TN753	1 to 18	Optional
DS1 Interface	TN767C	1 to 18	Optional
DS1/E1 Interface	TN464C	1 to 18	Optional for E1 span or for ISDN—PRI
DS1 Tie Trunk	TN722	1 to 18	Optional
Tie Trunk	TN760	1 to 18	Optional (Note 6)
Call-Classifier-Detector	TN744C	1 to 18	
Call Classifier	TN744	1 to 18	Optional (Note 7)
AUDIX System	None	5 to 18	Optional

NOTE:

1. A TN768 or TN780 is required only if the port cabinet resides in position B of a critical-reliability EPN.

   A TN780 is required to provide international tones for G3r system.
2. A TN726B (and a TN553) is required for a G3r system-access port.
3. A TN746B is required to provide the complete set of analog line functions with a 16-port analog pack.
4. Use a TN763B to connect an AUDICHRON announcement machine.
5. Use a TN747B to provide abandon call search for the ACD feature.
6. Use a TN760B for the CAS feature.
7. Required for Call Prompting answer detection or with OCM.
8. Use TN780 as Tone-Clock for Stratum 3 timing. Also required with the TN780 are the TN748, and TN744 for tone-detection.

9. The TN2182 Tone-Clock provides tone detection, tone generation, and tone-clock in one circuit pack, and it replaces the TN756, TN768, and TN780 circuit packs, while providing the same functionality as the TN748 and TN420 circuit packs.
10. Required for ring generation in France.
11. TN750C is required if your system will have multiple announcement boards. To use multiple announcement boards, you must have G3V4 software, and at least one TN750C (up to ten are allowed). Only one TN750/B may be present in the system when a TN750C is used. The announcements from a TN750/B can be saved and restored to a TN750C — but once the announcements are recorded onto a TN750C, do not copy announcements from a TN750C to a TN750 or TN750B, as it may corrupt the announcement data.

10. Add Attendant Console

Requirements

Like any voice terminal, an attendant console is connected to an information outlet (modular wall connecting block).

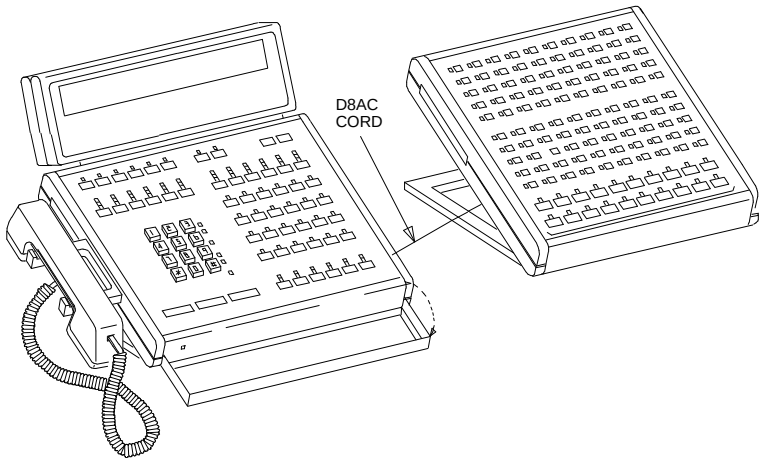

Figure 10-55. 302A1 Console and 26A1 Selector Console

Phantom Power

Since, like DCP voice terminals, an attendant console derives power for essential telecommunications functions through its DCP interface, a console's maximum distance from the system is limited. This maximum distance for a 302A1 console is:

- 5000 feet for 24-AWG wire
- 3400 feet for 26-AWG wire

The maximum distance for a 301B1 console is:

- 2400 feet for 25-AWG wire
- 1500 feet for 26-AWG wire

NOTE:
To install the 302B1 Console and 26A1 Selector Console, refer to "51. Add 302B1 Attendant Console" on page 10-172 in this chapter.

Auxiliary Power

See NOTE. The nonessential functions of an attendant console and its optional 26A1 or 24A1 selector console derive their power from an auxiliary power source. Out of the G3r maximum of 27 attendant consoles three of the consoles connected to each cabinet or single-carrier cabinet stack can derive auxiliary power from the system and through the auxiliary cable located in the trunk/auxiliary field. Whenever possible, auxiliary power for a primary attendant console should be provided through this cable so that the console remains fully operational during short power outages.

NOTE:
For a console connected to an MCC G3r system to realize the longest possible nominal battery holdover of 10 minutes, the console's TN754 or TN413 Digital Line circuit should reside in an EPN's expansion control carrier.

Depending on the location, a console connected to a circuit pack in another MCC G3r carrier will receive no more than 15 seconds of holdover. Whereas, a console connected to a circuit pack in any single-carrier cabinet will receive 1/4 second of holdover.

An attendant console can also derive auxiliary power from either:

- Individual MSP-1 power supplies or 258A-type adaptors, or
- Bulk power supplies such as the 1145A1

located at the cross-connect field, at an information outlet, or at the attendant console's site.

A console's maximum distance from its auxiliary power source is:

- 800 feet for a 302A1
- 350 feet for a 301B1

Installation

1. Unpack the attendant console and inspect for damage. Report any damage for appropriate action per local procedures.
2. Determine the port assignment of the console from Attendant Console form.

EXAMPLE:	Port Number	2	A	04	06
		Cabinet (Port Network)	Carrier (or Single-Carrier Cabinet)	Slot	Circuit

3. Connect a modular line cord from the designated information outlet to the attendant console.
4. Install auxiliary power for the attendant console; refer to *DEFINITY Communications System Generic 1 and Generic 3 Installation and Test*, 555-230-104, Issue 5, for detailed information.
5. Install labels per Attendant Console form and Display Module form assignments.
6. Install the handset bracket on either the left or right side of the console, as desired.
7. Insert the handset adapter on the same side of the handset bracket. A bracket is not required for a headset.

   NOTE:
   The handset adapter is available in two models: 854A-03 (black) or 854A-143 (burgundy).

8. Connect the handset cord to the jack on the same side of the console as the handset bracket.
9. See "9. Add Circuit Packs" on page 10-79 earlier in this chapter, and install a TN754 or TN413 Digital Line circuit pack in the assigned carrier slot (if an additional circuit pack is required).
10. Administer forms listed under Attendant Console in *DEFINITY Communications System Generic 3 V4 Implementation*, 555-230-655.

11. Add Selector Console

Requirements

The selector console is connected to an attendant console by a 3-foot D8AC cord provided with the selector console (See Figure 10-56 and Figure 10-57).

Installation

1. Install a 3-foot D8AC cord between the DXS/BLF jack (under the attendant console) and the modular jack (under the selector console).
2. Install labels per Attendant Console form.
3. Administer forms listed under ''Attendant Direct Extension Selection With Busy Lamp Field'' in *DEFINITY Communications System Generic 3 V4 Implementation*, 555-230-655.

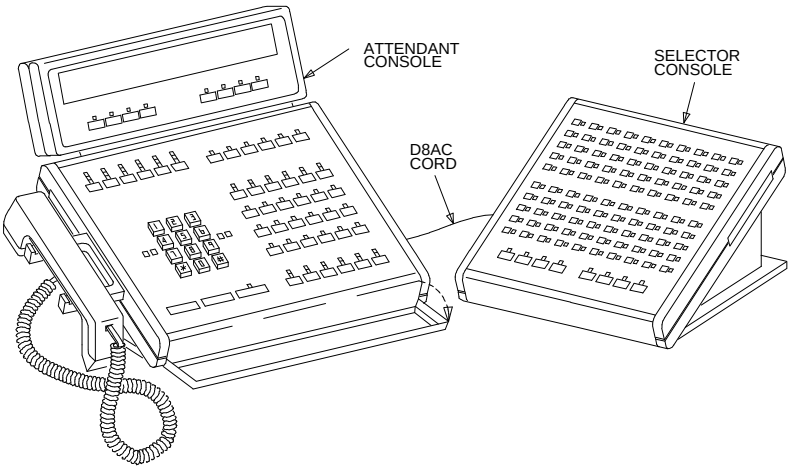

Figure 10-56. 301B1A Console and 24A1 Selector Console

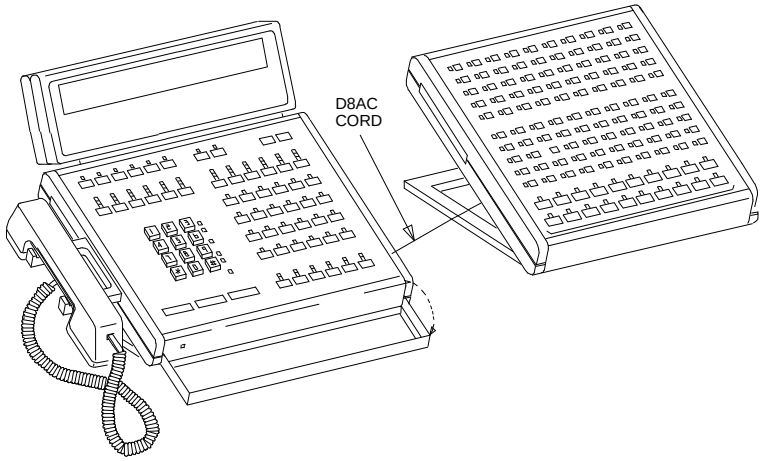

Figure 10-57. 302A Console and 26A1 Selector Console

12. Add CO, FX, WATS, and PCOL

Requirements

Each Central Office (CO), Foreign Exchange (FX), Wide Area Telecommunications Service (WATS), or Personal Central Office Line (PCOL) trunk is connected to one port of either an 8-port TN747 or to one of an assortment of international CO Trunk circuit packs. To add these trunks, do the following.

Installation

1. Determine the port assignment of the trunk from Trunk Group form.

EXAMPLE:	Port Number	3	A	07	01
		Cabinet (Port Network)	Carrier (or Single-Carrier Cabinet)	Slot	Circuit

2. See "9. Add Circuit Packs" on page 10-79 earlier in this chapter, and install a TN747 or an international CO Trunk circuit pack in assigned carrier slot (if an additional circuit pack is required).
3. Administer forms listed under CO, FX, WATS, or PCOL Trunk Group in *DEFINITY Communications System Generic 3 V4 Implementation*, 555-230-655.

Detailed descriptions for installing wiring are contained in *DEFINITY Communications System Generic 1 and Generic 3 Installation and Test*, 555-230-104, Issue 5.

13. Add DID Trunks

Requirements

Each Direct Inward Dial (DID) trunk is connected to one port of an 8-port TN753 or to one of an assortment of international DID Trunk circuit packs. To add these trunks, do the following.

Installation

1. Determine the port assignment of the trunk from Trunk Group form.

EXAMPLE:	Port Number	1	A	07	01
		Cabinet (Port Network)	Carrier (or Single-Carrier Cabinet)	Slot	Circuit

2. See "9. Add Circuit Packs" on page 10-79 earlier in this chapter, and install a TN753 or an international DID Trunk circuit pack in assigned carrier slot (if an additional circuit pack is required).
3. Administer forms listed under ‘‘DID Trunk Group’’ in *DEFINITY Communications System Generic 3 V4 Implementation*, 555-230-655.

Detailed descriptions for installing wiring are contained in *DEFINITY Communications System Generic 1 and Generic 3 Installation and Test*, 555-230-104, Issue 5.

14. Add Tie Trunks

Requirements

Each tie trunk is connected to one port of a 4-port TN760 or to an assortment of international Tie Trunk circuit packs. To add these trunks, do the following.

Installation

1. Determine the port assignment of the trunk from Trunk Group form.

EXAMPLE:	Port Number	3	A	02	01
		Cabinet (Port Network)	Carrier (or Single-Carrier Cabinet)	Slot	Circuit

2. See ‘‘9. Add Circuit Packs’’ and install TN760 or an international Tie Trunk circuit pack in assigned carrier slot (if an additional circuit pack is required).
3. For customer-owned (not -leased) tie-trunk facilities (such as campus environments), TN760 circuit packs provide signaling capabilities beyond those specified by the industry-wide E&M standard. Use Figure 10-58 and Table 10-11 to choose the preferred signaling format, set switches on the TN760 circuit pack, and administer the port.
4. Administer forms listed under ‘‘Tie Trunk Group’’ in the *DEFINITY Communications System Generic 3 V4 Implementation*, 555-230-655.

Detailed descriptions for installing wiring are contained in *DEFINITY Communications System Generic 1 and Generic 3 Installation and Test*, 555-230-104, Issue 5.

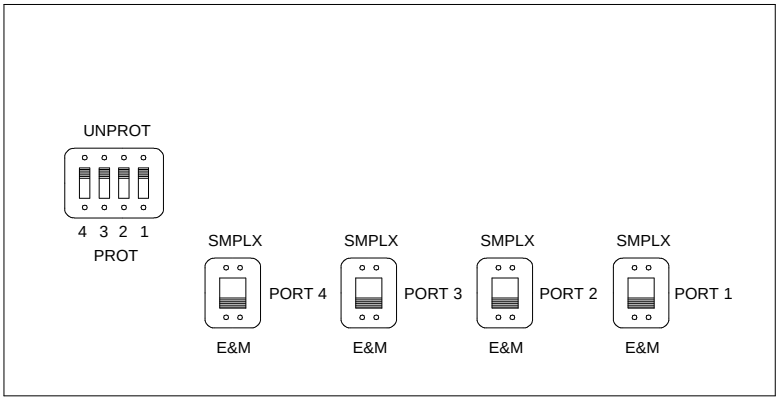

Figure 10-58. TN760 Tie Trunk Circuit Pack (Component Side)

Table 10-11. TN760 Option-Switch Settings and Administration

G1 or G3 Installation Situation		Preferred Signaling Format		Set E&M/SMPLX Option Switch to:	Set Prot/Unprot Option Switch to:	Administer Port As:
Circumstance	**To**	**G1 or G3**	**Far End**			
Collocated	DEFINITY, Sys 75/75XE, Sys 85, Sys 25	Simplex, Type 5	Simplex, Type 5	SMPLX		
Interbuilding	DEFINITY, Sys 75/75XE, Sys 85, Sys 25	Simplex, Type 5	Simplex, Type 5	SMPLX		
Collocated	Dimension. PBX	E&M Type 1 Compatible	E&M Type 1 Standard	E&M	Unprotected	Type1 Compatible
Interbuilding	Dimension PBX	Prot., Type 1 Compatible	Prot., Type 1 Standard	E&M	Protected	Type 1 Compatible
Collocated	Network Interface	E&M Type 1 Standard	Don't Care	E&M	Unprotected	Type 1
Collocated	Other	E&M Type 1 Compatible	E&M Type 1 Standard	E&M	Unprotected	Type 1 Compatible
Interbuilding	Other	Prot., Type 1 Compatible	Prot., Type 1 Std., plus Protection Unit	E&M	Protected	Type 1 Compatible

15. Add DS1 Tie, CO, FX, WATS, and OPS

The TN722 DS1 Tie Trunk, TN767C DS1 Interface, and TN464C DS1/E1 Interface circuit packs provide connections to a 1.544 Mbps DS1 facility as 24 independent 64-kbps trunks. On any of the 24 ports, the TN767C and TN464C support ISDN—PRI *B-channel* transmissions between the TDM bus and the DS1 facility. Whereas, only ports on the TN464C support ISDN—PRI *D-channel* transmissions. The data-transmission formats are specified by the signaling on a per-trunk basis for automatic, immediate-start, delay-dial, or release-link trunks.

When upgrading from a TN722 to a TN767C:

- Remove all TN722 trunk members from affected trunk groups.
- Enter `remove ds1 PCSS` (PCSS is the slot in which the TN722 is located).
- Remove the TN722 circuit pack.
- Put the TN767C circuit pack into the same slot.
- Wait until the red LED goes off. The hardware tests take 12 to 20 seconds to run. When the red LED goes off, the tests have completed.

  If the red LED stays on, reseat the board and repeat this step.
- Enter `add ds1 PCSS`.
- Continue with appropriate procedures to set up members of trunk groups.

Service Interruption

Since the addition of DS1 tie-trunk service may require a service interruption, notify the customer in advance as to when the addition will be carried out.

Verify System Status

Before proceeding, the system should be examined for alarms, and every problem should be corrected. The system must be alarm-free.

Save Translations

1. Log in at the G3-MT terminal.
2. If the system is high- or critical-reliability, enter **`status spe`**, and press (RETURN) to verify that the standby SPE is refreshed and that the standby disk is in service.
3. Enter **`save translation [spe-a or both] disk`**, and press (RETURN). This command instructs the system to take all translation information in memory and write it to the disk(s).
4. If the system contains a TN750 Announcement circuit pack, enter **`display announcements`**, and press (RETURN).

   If administered recorded announcements are listed, enter **`list configuration software-version`**, press (RETURN). Check Page 2 of this form to find out when the announcements were last saved, and ask the customer whether any announcements have changed since then.

   If so, the current announcements can be saved using the save announcements command. Enter **`save announcements disk`**, and press (RETURN).
5. Enter **`backup disk [spe-a or both]`** and press (RETURN). This command instructs the system to backup the current information on disk to the system tape(s).
6. Update backup tape(s), if required.

Shut Down DEFINITY AUDIX System

1. See WARNING. If a DEFINITY AUDIX System resides in the system to be upgraded, shut down the AUDIX assembly and allow the disk to completely spin down.

   WARNING:
   Neglecting to shut down an AUDIX assembly before powering down the system cabinet where it resides can damage the AUDIX disk.

2. See WARNING. To avoid an unexpected AUDIX reboot after an unplanned switch reboot, unseat the AUDIX assembly from its backplane connectors.

   WARNING:
   Before inserting or removing a circuit pack from a cabinet, put on a wrist strap and attach its plug or clip to the cabinet's frame.

Power Down System

NOTE:
Power down the system only if TN768 Tone-Clock is being replaced with a TN780 Tone-Clock in a standard-reliability system.

1. At the PPN, on the power-distribution unit, set the main circuit breaker to OFF.
2. At each EPN, on the power-distribution unit, set the main circuit breaker to OFF.

Add Circuit Packs

1. Determine the port assignments of the circuit packs to be added.
2. See "9. Add Circuit Packs" on page 10-79 earlier in this chapter, and install the TN722 DS1 Tie Trunk, the TN767C DS1 Interface, or TN464C DS1/E1 Interface circuit pack in assigned carrier slot.

Install Cables

Install H600-307 cable from the cabinet to a channel service unit (CSU), and install cables from the CSU to cross-connect field as required.

Detailed descriptions for installing wiring are contained in *DEFINITY Communications System Generic 1 and Generic 3 Installation and Test*, 555-230-104, Issue 5.

Reseat DEFINITY AUDIX System

See WARNING. If a DEFINITY AUDIX System resides in the system, reseat the AUDIX assembly to its backplane connectors.

WARNING:
Before inserting or removing a circuit pack from a cabinet, put on a wrist strap and attach its plug or clip to the cabinet's frame.

Power Up System

1. At the power-distribution unit, set the main circuit breaker to ON.
2. The system now goes through the level 4 rebooting process, loading the system translations from the disk. Rebooting takes 5 to 11 minutes.

   Refer to ''Initialization and Recovery'' and ''LED Interpretation'' chapters in *DEFINITY Communications System Generic 3r V4 Maintenance*, 555-230-105, Issue 4, for circuit-pack LED indications and G3-MT terminal displays that occur during system reboot.
3. After the system reboot is finished and all trouble is cleared, verify that the EMERGENCY TRANSFER CONTROL switch is set to AUTO. This restores the system to the normal mode.

Enter Added Translations

Administer forms listed under ''DS1 Tie Trunk Service'' in *DEFINITY Communications System Generic 3 V4 Implementation*, 555-230-655.

Save Translations

1. If the system is high- or critical-reliability, enter **`status spe`**, and press (RETURN) to verify that the standby SPE is refreshed and that the standby disk is in service.
2. Enter **`save translation [spe-a or both] disk`**, and press (RETURN). This command instructs the system to take all translation information in memory and write it to the disk(s).
3. If the system contains a TN750 Announcement circuit pack, enter **`list configuration software-version`**, and press (RETURN).

   If Page 2 of this form shows that recorded announcements were saved, these announcements can be restored using the restore announcements command. Enter **`restore announcements [disk | tape]`**, and press (RETURN).
4. Enter **`backup disk [spe-a or both]`** and press (RETURN). This command instructs the system to backup the current information on disk to the system tape(s).
5. Update backup tape(s), if required.

16. Add Speech Synthesis

Requirements

The TN725B Speech Synthesizer circuit pack is required when the Voice Message Retrieval, Automatic Wakeup, or Do Not Disturb features are activated. The TN725B circuit pack does not require administration.

Installation

1. Determine the port assignment of the Speech Synthesizer circuit pack being added.
2. See "9. Add Circuit Packs" on page 10-79 earlier in this chapter, and install the TN725B Speech Synthesizer circuit pack in the designated carrier slot.

17. Add Code Calling Access

The tones for the Code Calling feature are generated by the TN768 or TN780 Tone-Clock circuit packs in the G3r port networks. This feature allows attendants, voice terminal users, and trunk users to page with coded signals. The feature is administered on the Loudspeaker Paging and Code Calling Access form.

Requirements

A TN763 (or an international TN417) Auxiliary Trunk circuit pack or a TN457 Speech Synthesizer circuit pack must be installed and connected for Loudspeaker Paging. The Code Calling Access feature shares the same ports used for Loudspeaker Paging. An Auxiliary Trunk circuit pack provides four ports for Loudspeaker Paging and Code Calling Access.

Installation

Administer the form listed under ‘‘Code Calling Access’’ in *DEFINITY Communications System Generic 3 V4 Implementation*, 555-230-655.

18. Add Pooled Modem

Requirements

The G3r Modem Pooling supports two kinds of conversion resources: integrated conversion resources and combined conversion resources.

The integrated type requires a TN758 Pooled Modem circuit pack for each two conversion resources provided.

The combined type requires a port of a TN754, TN413, or TN2136 Digital Line circuit pack and a port of either an 8-port TN742, TN769, or TN467 or a 16-port TN746B, TN468B, TN2135, TN2144, or TN2149 Analog Line circuit pack for each conversion resource provided.

Installation

1. Determine the port assignment of the circuit pack(s) to be added (if required).
2. See "9. Add Circuit Packs" on page 10-79 earlier in this chapter, and install the appropriate circuit pack(s) in assigned carrier slot (if required).
3. Administer the forms listed under ‘‘Modem Pooling’’ in *DEFINITY Communications System Generic 3 V4 Implementation*, 555-230-655.

19. Add Off-Premises Terminals

Requirements — Off-Premises Terminals

See NOTE. An off-premises terminal is not physically located in the same building as the port network to which it is connected, and its access to the port network is provided by *public* right-of-way. An off-premises terminal must be an analog station (for example, a 2500 set). The outside cabling is engineered and provided by a telephone company. Appearances for off-premises terminals reside on the information outlet (RJ21X interface facility). Either any 8-port analog circuit pack or most 16-port analog circuit pack (except a TN746A, TN468A, or TN479) can be used for off-premises terminals.

NOTE:
The neon message waiting capability provided by the TN769, TN746B, TN468B, TN2133, TN2144, or the TN2149 cannot be used off-premises.

The 16-port TN746A, TN468A, or TN479 circuit packs do not support off-premises terminals.

Requirements — Out-of-Building Terminals

See NOTE. Out-of-building terminals are not physically located in the same building as the port network to which they are connected, but their access to the port network is provided by *private* right-of-way. Carbon block (or equivalent) protection must be provided at both building entrances. Either any 8-port or most 16-port circuit packs can be used for out-of-building terminals.

NOTE:
The 16-port TN746A, TN468A, or TN479 circuit packs do not support out-of-building terminals.

Installation

1. Determine the port assignment of the terminal from Station Record form:

EXAMPLE:	Port Number	1	B	07	01
		Cabinet (Port Network)	Carrier (or Single-Carrier Cabinet)	Slot	Circuit

2. Connect modular line cord from the information outlet to off-premises terminal.
3. See "9. Add Circuit Packs" on page 10-79 earlier in this chapter and install the Analog Line circuit pack in assigned carrier slot (if an additional circuit pack is required).
4. Administer the appropriate voice terminal form according to *DEFINITY Communications System Generic 3 V4 Implementation*, 555-230-655.

Detailed descriptions for installing wiring are contained in *DEFINITY Communications System Generic 1 and Generic 3 Installation and Test*, 555-230-104, Issue 5.

20. Add External Alerting

Requirements

See NOTE. External alerting is provided by a device, such as a gong, chime, or bell, connected to an information outlet (modular wall connecting block). The switch side of the cross-connect field connects to any 8-port or to a 16-port (with restrictions) Analog Line circuit packs located in a port carrier.

NOTE:
The 16-port TN746A, TN468A, or TN479 circuit packs do not support external alerting.

Up to five external alerting devices can be connected to one port of an Analog Line circuit pack.

Installation

1. Determine the port assignment of the Night Service — Trunk Answer From Any Station feature using the External Alert Port field of the Console Parameters form:

EXAMPLE:	Port Number	1	B	07	01
		Cabinet (Port Network)	Carrier (or Single-Carrier Cabinet)	Slot	Circuit

2. See "9. Add Circuit Packs" on page 10-79 earlier in this chapter, and install the Analog Line circuit pack in assigned carrier/cabinet slot (if an additional circuit pack is required).
3. Administer External Alert Port number on the Console Parameters form per *DEFINITY Communications System Generic 3 V4 Implementation*, 555-230-655.

Detailed descriptions for installing wiring are contained in *DEFINITY Communications System Generic 1 and Generic 3 Installation and Test*, 555-230-104, Issue 5.

21. Add Queue Warning Indicator

Requirements

See NOTE. An AC indicator (lamp), such as a 21C49, can be used as a queue warning indicator for a Uniform Call Distribution (UCD)/Direct Department Calling (DDC) queue. The lamp is connected to an information outlet (modular wall connecting block). The switch side of the cross-connect field is connected either to any 8-port or to a 16-port (with restrictions) Analog Line circuit pack.

NOTE:
The 16-port TN746A, TN468A, or TN479 circuit packs do not support queue warning indications.

Installation

1. Determine the port assignment of the queue warning lamp from Hunt Group form:

EXAMPLE:	Port Number	1	B	07	01
		Cabinet (Port Network)	Carrier (or Single-Carrier Cabinet)	Slot	Circuit

2. See "9. Add Circuit Packs" on page 10-79 earlier in this chapter, and install the Analog Line circuit pack in assigned carrier slot (if an additional circuit pack is required).
3. Administer the fields on the Hunt Group form listed under ‘‘Queue Status Indications’’ in *DEFINITY Communications System Generic 3 V4 Implementation*, 555-230-655.

Detailed descriptions for installing wiring are contained in *DEFINITY Communications System Generic 1 and Generic 3 Installation and Test*, 555-230-104, Issue 5.

22. Add Loudspeaker Paging Access

Requirements

Access to loudspeaker paging is provided by an information outlet (modular wall connecting block). A 4-port TN763 Auxiliary Trunk circuit pack must be installed for Loudspeaker Paging.

Installation

1. Determine the port assignment of the paging zone(s) from Loudspeaker Paging form:

EXAMPLE:	Port Number	3	B	02	01
		Cabinet (Port Network)	Carrier (or Single-Carrier Cabinet)	Slot	Circuit

2. See "9. Add Circuit Packs" on page 10-79 earlier in this chapter, and install the TN763 Auxiliary Trunk circuit pack in assigned carrier slot (if an additional circuit pack is required).
3. Administer the forms listed under ‘‘Loudspeaker Paging Access’’ in *DEFINITY Communications System Generic 3 V4 Implementation*, 555-230-655.

See NOTE. Detailed descriptions for installing the wiring are contained in *DEFINITY Communications System Generic 1 and Generic 3 Installation and Test*, 555-230-104, Issue 5.

NOTE:
The 278A adapter is no longer manufactured. Therefore, the wiring diagram in the installation manual assumes that a new 909-series universal coupler is being used. If a 278A adapter is being reused, Figure 10-59 provides the appropriate wiring.

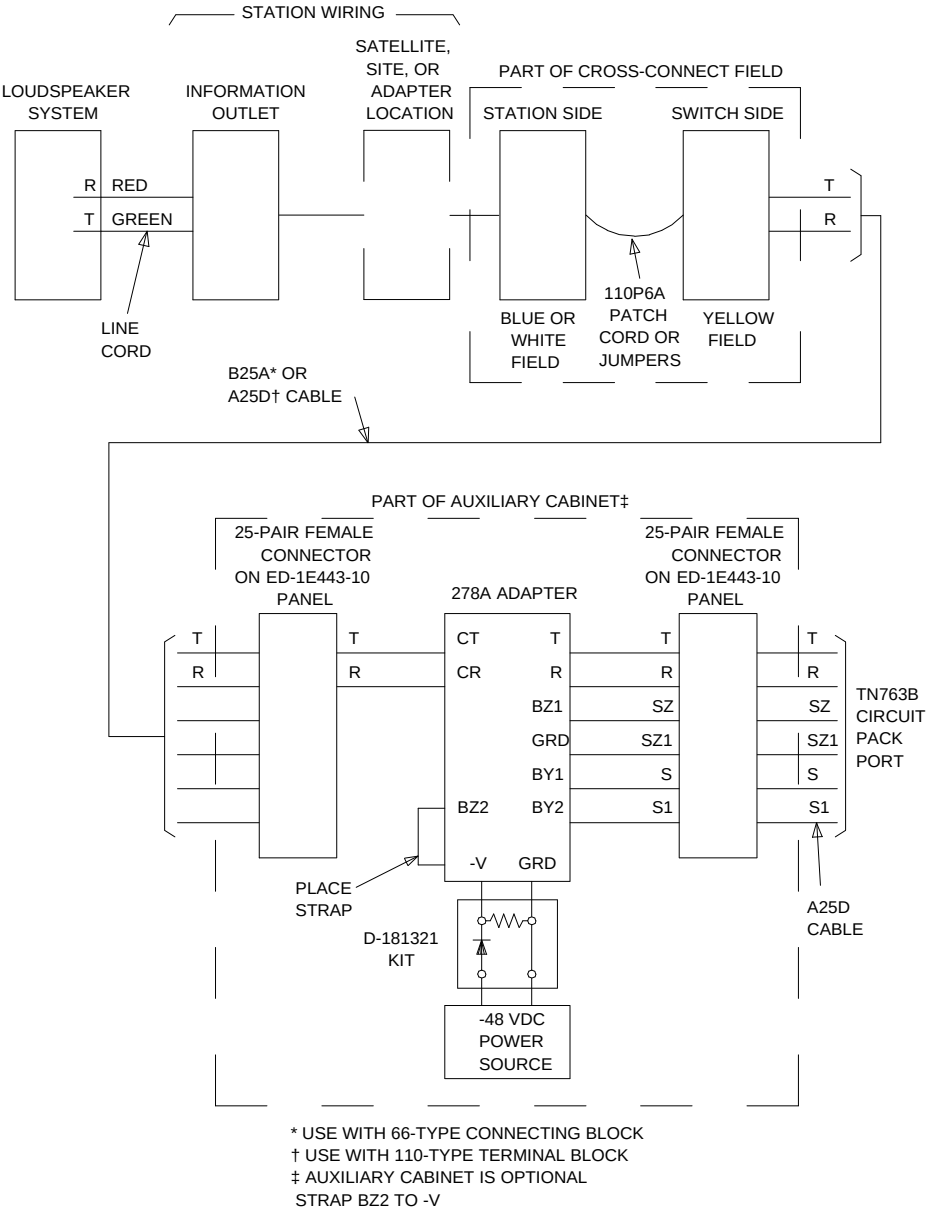

Figure 10-59. Loudspeaker Paging

23. Add Loudspeaker Paging with Music

Requirements

Background music may be added after installing the Loudspeaker Paging and Music-on-Hold features. The music source and loudspeaker equipment may be provided by the customer.

Installation

The music source is connected to the M1 and M2 terminals on the Loudspeaker Paging Access 278A adapter and from the adapter's CT and CR terminals to the loudspeaker paging equipment.

Detailed descriptions for installing wiring are contained in *DEFINITY Communications System Generic 1 and Generic 3 Installation and Test*, 555-230-104, Issue 5.

24. Add PagePac Paging System

Requirements

The PagePac. paging systems use a single port of a system circuit pack to provide single or multizone loudspeaker paging. A PagePac system may be used in addition to the standard loudspeaker paging and code-calling capabilities of the system. A TN763 Auxiliary Trunk circuit pack is used for PagePac paging equipment.

Three models are available:

- PagePac 20
- PagePac VS
- PagePac 50/100/200

PagePac 20

The PagePac is a 20-watt amplifier that can be used alone to provide a single zone of paging or it can be equipped with a ZoneMate 9 or 34 to provide multiple paging zones.

PagePac VS

The PagePac VS is a 35-watt amplifier that provides up to three paging zones. This unit is wall mountable. The optional feature cards (to provide music or talkback) are plugged into the lower half of the unit.

PagePac 50/100/200

The 50/100/200 PagePac Paging system will mount directly on the wall or on a 23-inch relay rack by using the appropriate adapters.

The unit provides three wattages: 50, 100, and 200. The PagePac amplifier can either be used alone to provide a single paging zone or add-on units can be provided to create a paging system with up to 24 paging zones.

Installation

1. Determine the port assignment of the paging zone(s) from Loudspeaker Paging form:

EXAMPLE:	Port Number	3	B	02	01
		Cabinet (Port Network)	Carrier (or Single-Carrier Cabinet)	Slot	Circuit

2. See "9. Add Circuit Packs" on page 10-79 earlier in this chapter, and install the TN763 Auxiliary Trunk circuit pack in assigned carrier slot (if an additional circuit pack is required).
3. Administer forms listed under ‘‘Loudspeaker Paging Access’’ in *DEFINITY Communications System Generic 3 V4 Implementation*, 555-230-655.

Detailed descriptions for installing wiring are contained in *DEFINITY Communications System Generic 1 and Generic 3 Installation and Test*, 555-230-104, Issue 5.

NOTE:
The 278A adapter is no longer manufactured. Therefore, the wiring diagram in the installation manual assumes that a new 909-series universal coupler is being used. If a 278A adapter is being reused, Figure 10-60 and Figure 10-61 provide the appropriate wiring.

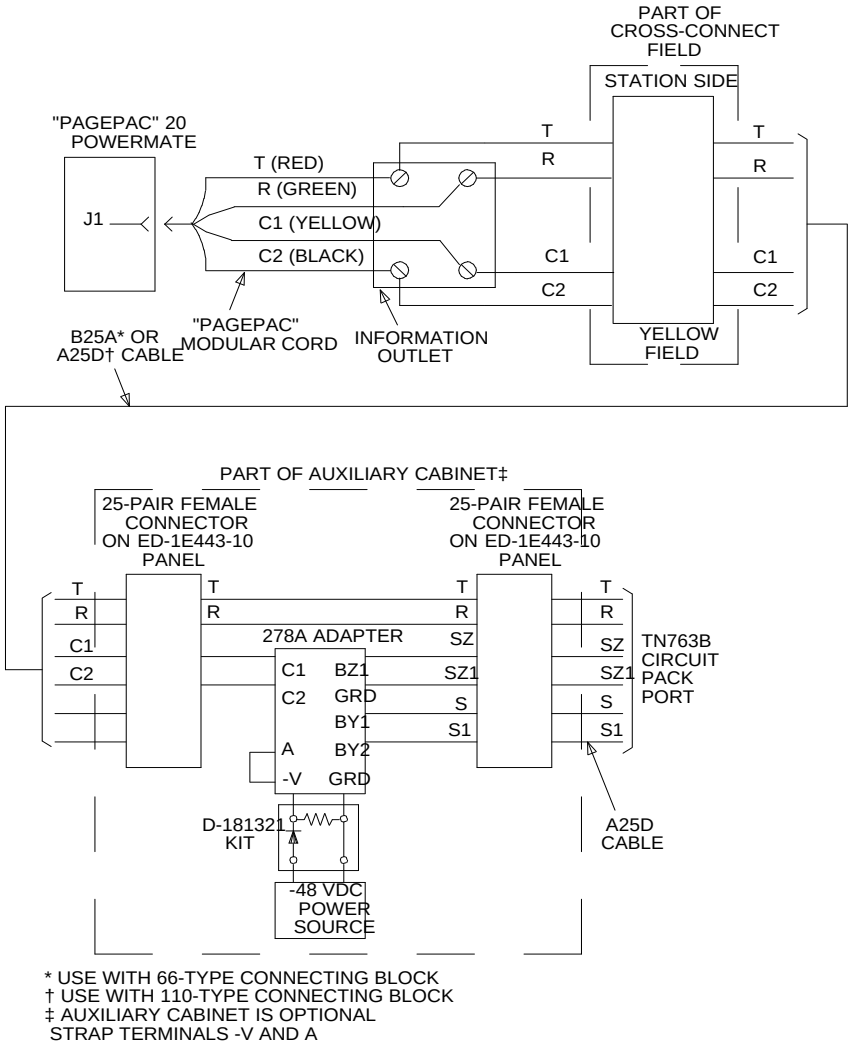

Figure 10-60. PagePac

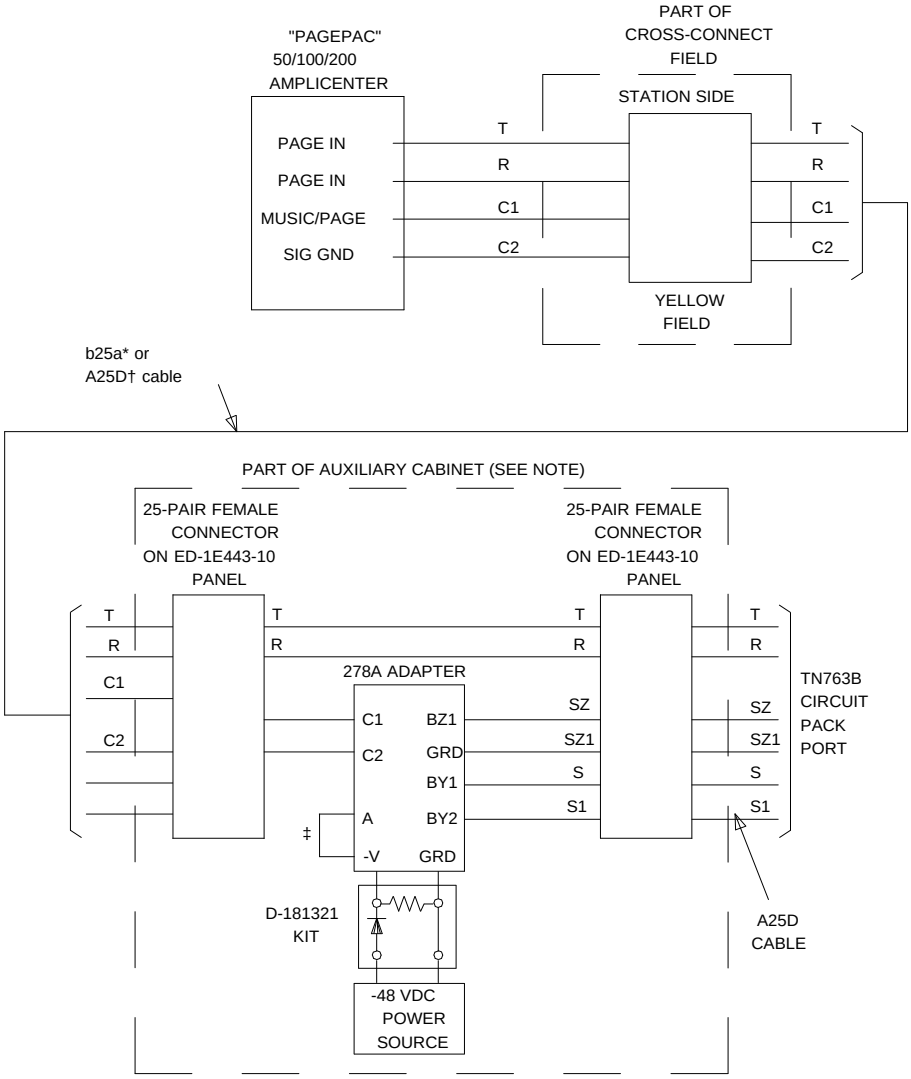

NOTE: AUXILIARY CABINET IS OPTIONAL

* USE WITH 66-TYPE CONNECTING BLOCK
† USE WITH 110-TYPE TERMINAL BLOCK
‡ STRAP TERMINALS -V AND A

Figure 10-61. Connections for PagePac 50/100/200 Amplicenter Only

25. Add Music-on-Hold Access

Requirements

Access to the music source is provided by an information outlet.

Either a 4-port TN763 Auxiliary Trunk or an 8- or 16-port Analog Line circuit pack (except a TN746, TN468, or TN479) must be installed for Music-on-Hold.

Installation

1. Determine the port assignment of the feature from Feature-Related System Parameters form:

EXAMPLE:	Port Number	3	B	02	01
		Cabinet (Port Network)	Carrier (or Single-Carrier Cabinet)	Slot	Circuit

2. See "9. Add Circuit Packs" on page 10-79 earlier in this chapter, and install the:
   - 4-port TN763 auxiliary trunk
   - 8-port TN742 analog line
   - 8-port TN769 analog line
   - 16-port TN746B analog line
   - 16-port TN468B analog line

   circuit pack in assigned carrier slot (if an additional circuit pack is required).
3. Administer the forms listed under ‘‘Music-on-Hold Access’’ in *DEFINITY Communications System Generic 3 V4 Implementation*, 555-230-655.

Figure 10-62 through Figure 10-66 show the wiring for Music-on-Hold.

NOTE:
The 36A voice coupler is no longer manufactured. The wiring diagram in the installation manual assumes the new 909-series universal coupler is being used. If a 36A voice coupler is being reused, Figure 10-62 through Figure 10-64 provide the appropriate wiring.

For analog line access, use the KS23395 L4 coupler.

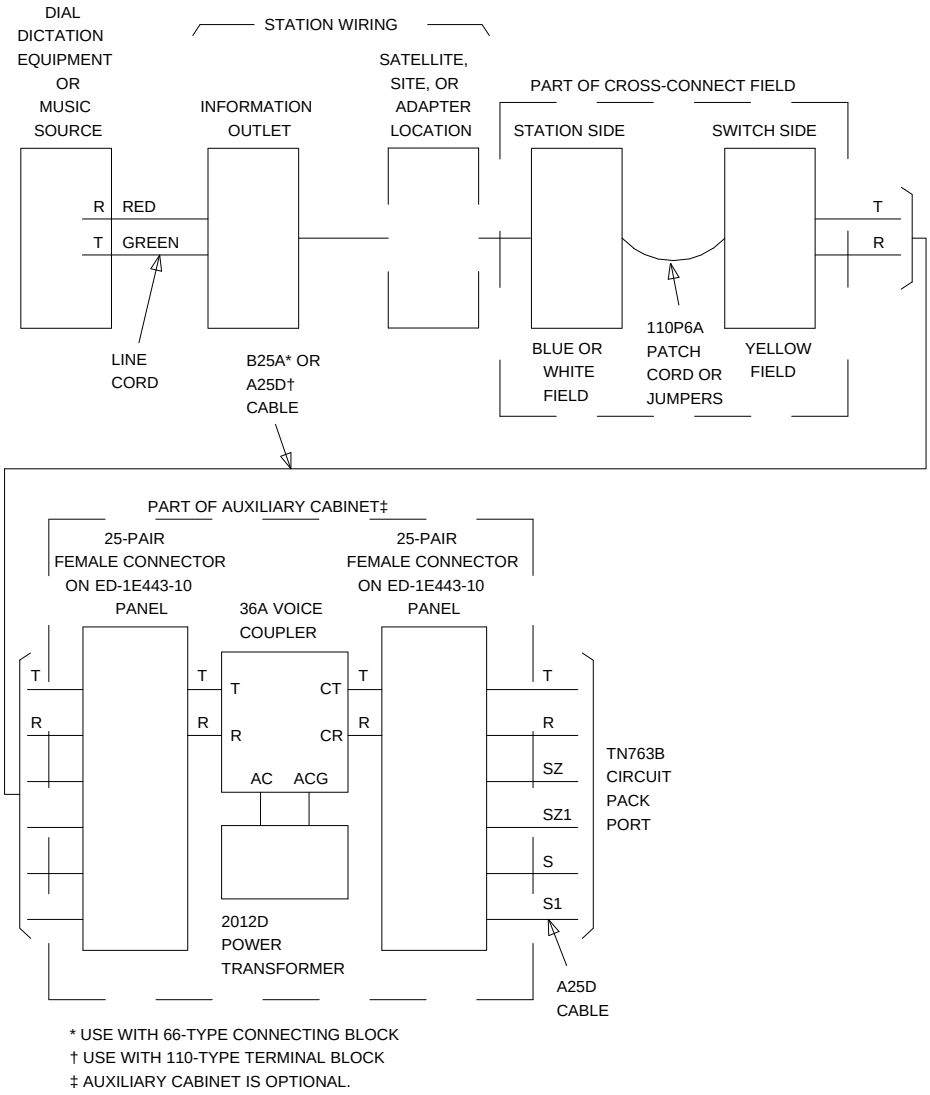

Figure 10-62. Music-on-Hold Access with Auxiliary Trunk

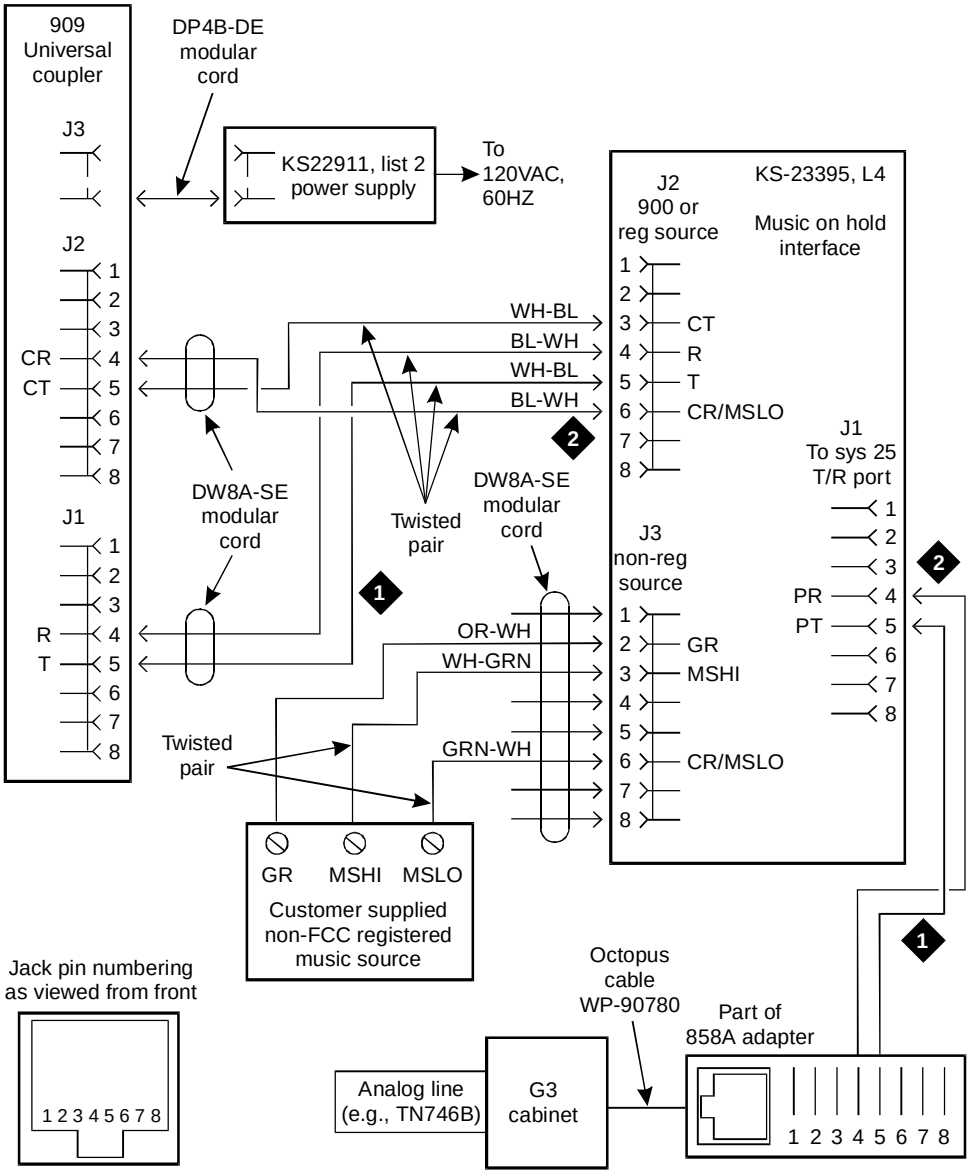

1. Caution: Use minimum Class 2 wiring only.
2. Modular plug required.

Figure 10-63. Non-FCC-Registered Music-on-Hold Access with Analog Line

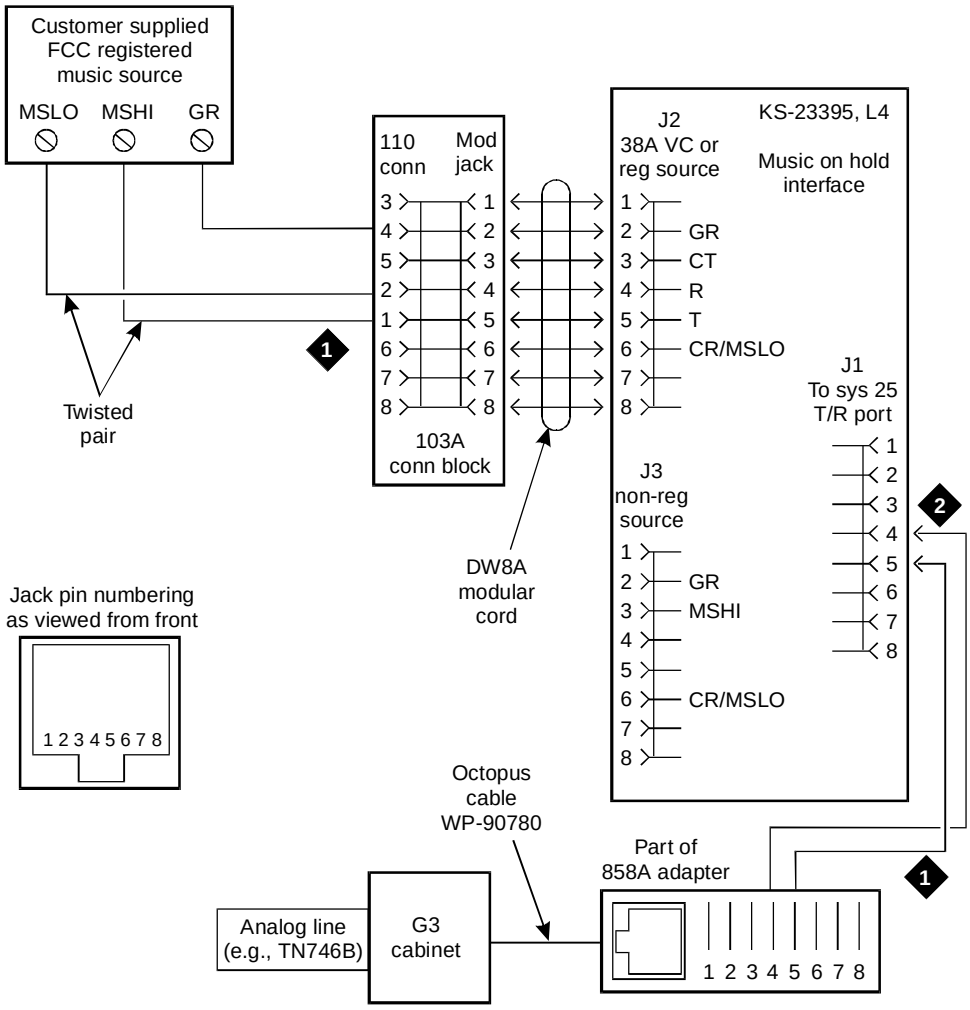

1. Caution: Use minimum Class 2 wiring only.
2. Modular plug required.

Figure 10-64. FCC-Registered Music-on-Hold Access with Analog Line

26. Add Analog Recorded Announcement

Requirements

Access for customer-provided analog recorded announcement equipment is provided by an information outlet.

An 8- or 16-channel 15A Digital Announcer provides recorded announcements for the Intercept Treatment — Recorded Announcement feature. If located outside an auxiliary cabinet, this model requires an MSP-1 power supply.

A Cook Electric 1-channel or 5-channel Digital Announcer is available and provides recorded announcements for the Intercept Treatment — Recorded Announcement feature. Both models require an AC adapter for 115-volt AC power.

Either an 8-port or a 16-port (with restrictions) Analog Line circuit pack is installed for recorded announcements.

NOTE:
The 16-port TN746A, TN468A, or TN479 circuit packs do not support recorded announcements.

Installation

1. Determine the port assignment of the feature from Announcement form:

EXAMPLE:	Port Number	3	B	02	01
		Cabinet (Port Network)	Carrier (or Single-Carrier Cabinet)	Slot	Circuit

2. See "9. Add Circuit Packs" on page 10-79 earlier in this chapter, and install the Analog Line circuit pack in assigned carrier slot (if an additional circuit pack is required).
3. Administer the forms listed under Recorded Announcements in *DEFINITY Communications System Generic 3 V4 Implementation*, 555-230-655.

Detailed descriptions for installing wiring are contained in *DEFINITY Communications System Generic 1 and Generic 3 Installation and Test*, 555-230-104, Issue 5.

NOTE:
The 36A voice coupler is no longer manufactured. The wiring diagram in the installation manual assumes a new 909-series universal coupler is being used. If a 36A voice coupler is being reused, Figure 10-65 and Figure 10-66 provide the appropriate wiring.

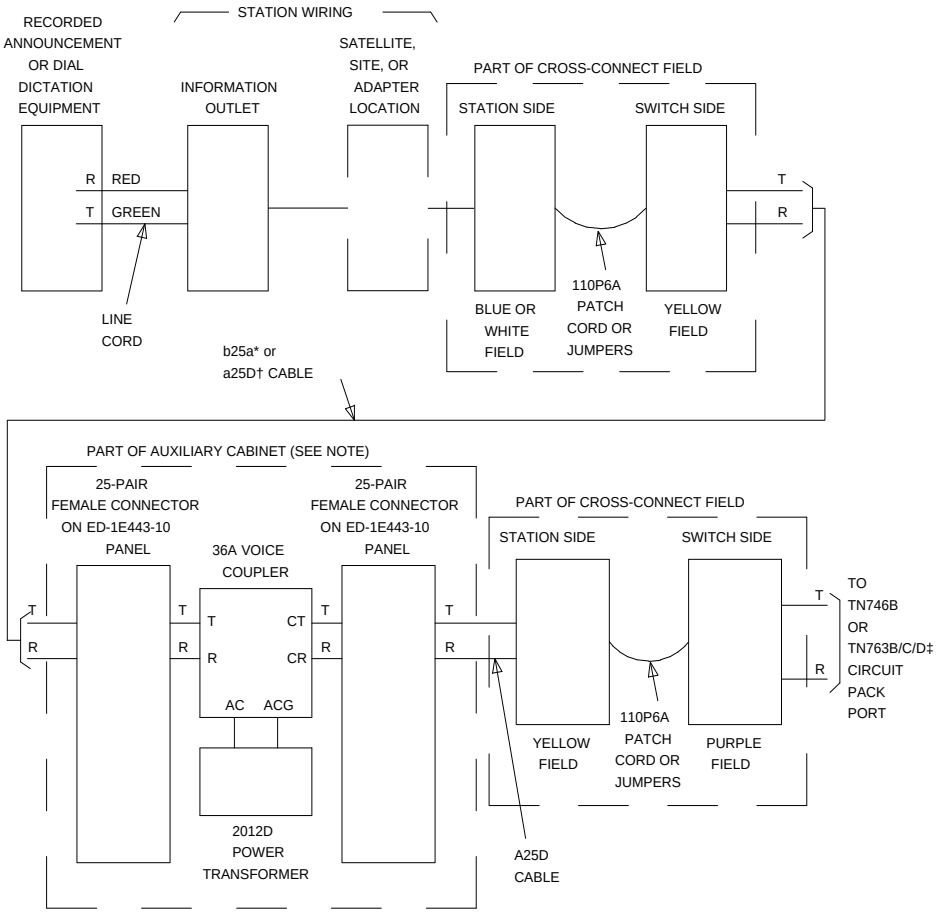

Figure 10-65. Analog Access to Recorded Announcement

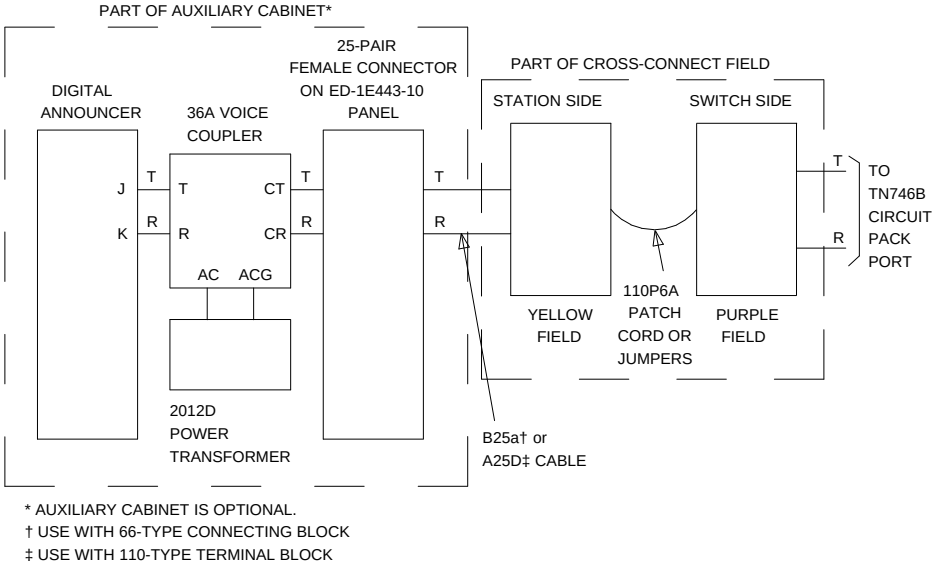

* AUXILIARY CABINET IS OPTIONAL.
† USE WITH 66-TYPE CONNECTING BLOCK
‡ USE WITH 110-TYPE TERMINAL BLOCK

Figure 10-66. Connections for Digital Announcer Mounted in Auxiliary Cabinet

27. Add Integrated Recorded Announcement

Requirements

The TN750C Multiple Integrated Announcement circuit pack records and stores announcements that can be played back on demand as part of a calling feature. The TN750C provides on-board flash memory, which provides internal backup of the announcements. This allows support for multiple circuit packs and eliminates the need for a 40-minute restore/download process after a power failure or system reload.

TN750C circuit packs are required if your system will have multiple announcement circuit packs. To use multiple announcement circuit packs, you must have G3 V4 software, and at least one TN750C circuit pack. No more than one TN750 or TN750B can reside in the system. The TN750C can be installed in any port or service (TDM) slot, and need not reside in a control carrier for extra power holdovers.

The following table shows the maximum number of announcement circuit packs you may have in your system:

Table 10-12. Maximum Announcement Boards Per G3 V4 System

System Type	Maximum Number of Announcement Boards
G3vs	1
G3s	1
G3i	5
G3r	10

The announcements from a TN750 or TN750B can be saved and then restored to a TN750C.

NOTE:
Do not copy or restore announcements from a TN750C to a TN750 or TN750B circuit pack, as this process may corrupt the announcement data.

TN750C Announcement Board

The TN750C circuit pack contains flash memory which provides internal backup of announcements on the circuit packs. Thus, the TN750C circuit pack does not need the save and restore processes still required for the TN750 and TN750B circuit packs. However, you can use the save and restore processes to copy announcements from the TN750 or TN750B to a TN750C circuit pack.

The TN750C circuit pack can be used to replace a TN750 or TN750B circuit pack in G3 V3 and earlier systems. The difference in operation is that the TN750C circuit pack automatically restores and reports the availability of announcements from its own internal flash memory in 5 minutes, rather than the approximately 40 minutes it took the TN750 or TN750B circuit pack from the mass-storage system.

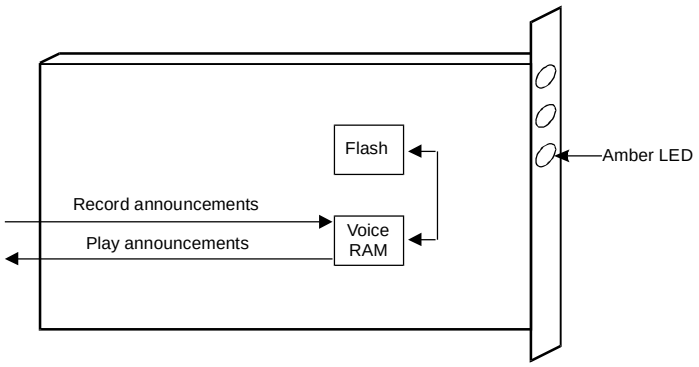

Figure 10-67. Operation of TN750C Announcement Board

If a circuit pack being installed already has announcements in its flash memory, the amber LED will flash as the announcements are being copied to the Voice RAM.

Save and Restore Recorded Announcements

CAUTION:
If the amber LED is flashing, do not remove the circuit pack, as this will corrupt the announcement data.

The command syntax for saving from any TN750 circuit pack with G3 V4 is:

```
Save announcements [‘from’ cabinet(1-X). carrier (A-E),
slot (0-20)]
```

Where X for cabinet is the system maximum, where the maximum carrier letter varies with the G3 cabinet type, and where the slot number varies with the G3 carrier type.

The command syntax for restoring to a TN750C circuit pack is:

Restore announcements [disk | tape [‘to’ cabinet(1-X). carrier (A-E), slot (0-20)]]

Where X for cabinet is the system maximum, where the maximum carrier letter varies with the G3 cabinet type, and where the slot number varies with the G3 carrier type.

When you execute a restore command and there are existing announcements on the circuit pack, you will receive the following warning message:

```
WARNING: This restore announcement command will overwrite
         the existing announcements on the specified
         board.
```

After five minutes have lapsed with no alterations to the announcements, the TN750C automatically copies the announcements from the Voice RAM to the internal flash memory. Again, the amber LED on the front of the TN750C will flash during this operation.

You can only save the announcement contents of one circuit pack to mass storage (G3r tape or disk, or G3i/s/vs translation memory card) at a time. For the contents of every circuit pack to be saved, you must save to separate tapes or translation memory cards. Label each tape or translation memory card to match the circuit pack saved to it.

TN750 and TN750B Announcement Boards

NOTE:
The save and restore procedures described below are only necessary for TN750 and TN750B announcement circuit packs. You can also use them to copy announcements to TN750C announcement circuit packs, but TN750C circuit packs use an internal backup process and do not need these save procedures.

The recorded announcements in the system can be saved on the mass-storage system by entering the `save announcements spe-active/spe-standby` command. These commands should only be used after business hours or when the system is operating during a low-usage period. The system takes about 40 minutes to transfer the recorded announcements from the announcement circuit pack to the mass-storage system. During this time period, the G3-MT terminal (where the save announcements command was executed) cannot be used to administer the system until the transfer is finished; however, all other administration terminals, if provided, are allowed to perform administration procedures.

The recorded announcements in the system can be restored to system memory from the system tape or translation memory card by entering the `restore announcements` command.

Recommended Installation Procedures for G3 V4 Systems

The following sections describe the various procedures to install the TN750C circuit pack on G3 V4 systems.

Replace a TN750B with a TN750C or Move all Announcements from a TN750B to a TN750C

Use this procedure to replace a TN750B circuit pack with a TN750C circuit pack or to move every announcement from a TN750B circuit pack to a TN750C circuit pack.

NOTE:
Do not copy or restore announcements from a TN750C to a TN750 or TN750B circuit pack, as this process may corrupt the announcement data.

1. Save announcements from the TN750/B to the mass-storage system.

   WARNING:
   Before inserting or removing a circuit pack from a cabinet, put on a wrist strap and attach its plug or clip to the cabinet's frame.

2. Align and slide the TN750C circuit pack with latch lever opened into a vacant slot of a carrier.

   NOTE:
   Any carrier is acceptable since power holdover is not a concern.

3. Lift locking lever upward until latch pin engages.
4. Administer a new data module on the TN750C circuit pack, as described in *DEFINITY Communications System Generic 3 Implementation*, 555-230-655.
5. Enter the **`restore announcements`** command for the TN750C circuit pack equipment location.
6. Wait until announcements have been copied from Voice RAM to flash memory. (i.e., amber LED on the TN750C stops flashing). This may take about ten minutes.
7. Execute the **`busyout board 01c11`** command for the TN750/B circuit pack, where "01c11" is an example circuit pack location.
8. Execute the **`change integrated announcements`** command. This modifies the translations for the TN750B circuit pack to reference the TN750C circuit pack.
9. Verify proper playback of the announcements from the TN750C circuit pack by calling them.

10. Execute the **`release board 01c11`** command for the TN750/B circuit pack, where “01c11” is an example circuit pack location.

Add Additional TN750C Boards

Use this procedure to add TN750C circuit packs to a system.

WARNING:
Before inserting or removing a circuit pack from a cabinet, put on a wrist strap and attach its plug or clip to the cabinet’s frame.

1. Align and slide circuit pack with latch lever opened into a vacant slot in a carrier.

   NOTE:
   Any carrier is acceptable since power holdover is not a concern.

2. Lift locking lever upward until latch pin engages.
3. Administer a new data module on the TN750C circuit pack, as described in *DEFINITY Communications System Generic 3 Implementation*, 555-230-655.
4. Administer new announcements to that TN750C slot by executing the `change announcements` command and filling in the “designated board location” field for the circuit pack’s location.
5. Record the announcements, as described in *DEFINITY Communications System Feature Description*, 555-230-204, Issue 2.
6. Wait until the announcements have been copied from Voice RAM to the on-board flash memory (i.e., the amber LED on the TN750C starts and then stops flashing). This may take about 10 minutes.

Move a Single Announcement from One Announcement Board to Another

Use this procedure to move a single announcement from one announcement circuit pack to another.

1. Execute the `change announcements` command to change the circuit pack locations of a particular announcement. (You may also change the compression rate at this time.)
2. You must rerecord the announcement, as described in *DEFINITY Communications System Feature Description*, 555-230-204, Issue 2.

Recommended Installation Procedures for G3 V3 and Earlier Systems

Replace a TN750/B Board with a TN750C Board

Use this procedure to replace a TN750/B circuit pack with a TN750C circuit pack on G3 V3 and earlier systems.

1. Save announcements from the TN750/B to the mass-storage system.
2. Execute the **`busyout board 01c11`** command for the TN750/B circuit pack, where “01c11” is an example circuit pack location.

   WARNING:
   Before inserting or removing a circuit pack from a cabinet, put on a wrist strap and attach its plug or clip to the cabinet’s frame.

3. Remove the TN750B circuit pack from its slot.
4. Align and slide the TN750C circuit pack with latch lever opened into the same slot.
5. Lift locking lever upward until latch pin engages.
6. Execute the **`restore announcements`** command to ensure that your announcements are on the TN750C circuit pack.

New Integrated Announcement Commands

Use the following new commands to administer integrated announcements:

`erase integrated announcements`

`change integrated announcements`

`list integrated announcements`

`display integrated announcements`

See *DEFINITY Communications System Generic 3 V4 Implementation*, 555-230-655, for more information about using these commands.

28. Add Recorded Telephone Dictation Access

Requirements

Access for recorded telephone dictation equipment is provided by an information outlet.

For analog line access, either an 8-port or a 16-port (with restrictions) Analog Line circuit pack is required.

NOTE:
The 16-port TN746A, TN468A, or TN479 circuit packs do not support recorded telephone dictation access.

For auxiliary trunk access, a TN763 Auxiliary Trunk circuit pack is required.

Installation

1. Determine the port assignment of the feature either from the Station Record form when an Analog Line circuit pack is used or from the Trunk Group form for Customer Provided Equipment when an Auxiliary Trunk circuit pack is used.

EXAMPLE:	Port Number	3	B	02	01
		Cabinet (Port Network)	Carrier (or Single-Carrier Cabinet)	Slot	Circuit

2. See "9. Add Circuit Packs" on page 10-79 earlier in this chapter, and install the Analog Line or the Auxiliary Trunk circuit pack in assigned carrier slot [if additional circuit pack(s) is required].
3. Administer the forms listed under ‘‘Recorded Telephone Dictation Access’’ in *DEFINITY Communications System Generic 3 V4 Implementation*, 555-230-655.

Detailed descriptions for installing wiring are contained *DEFINITY Communications System Generic 1 and Generic 3 Installation and Test*, 555-230-104, Issue 5.

NOTE:
The 36A voice coupler is no longer manufactured. Therefore, the wiring diagram in the installation manual assumes that a new 909-series universal coupler is being used. If a 36A voice coupler is being reused, Figure 10-65 and Figure 10-66 provide the appropriate wiring.

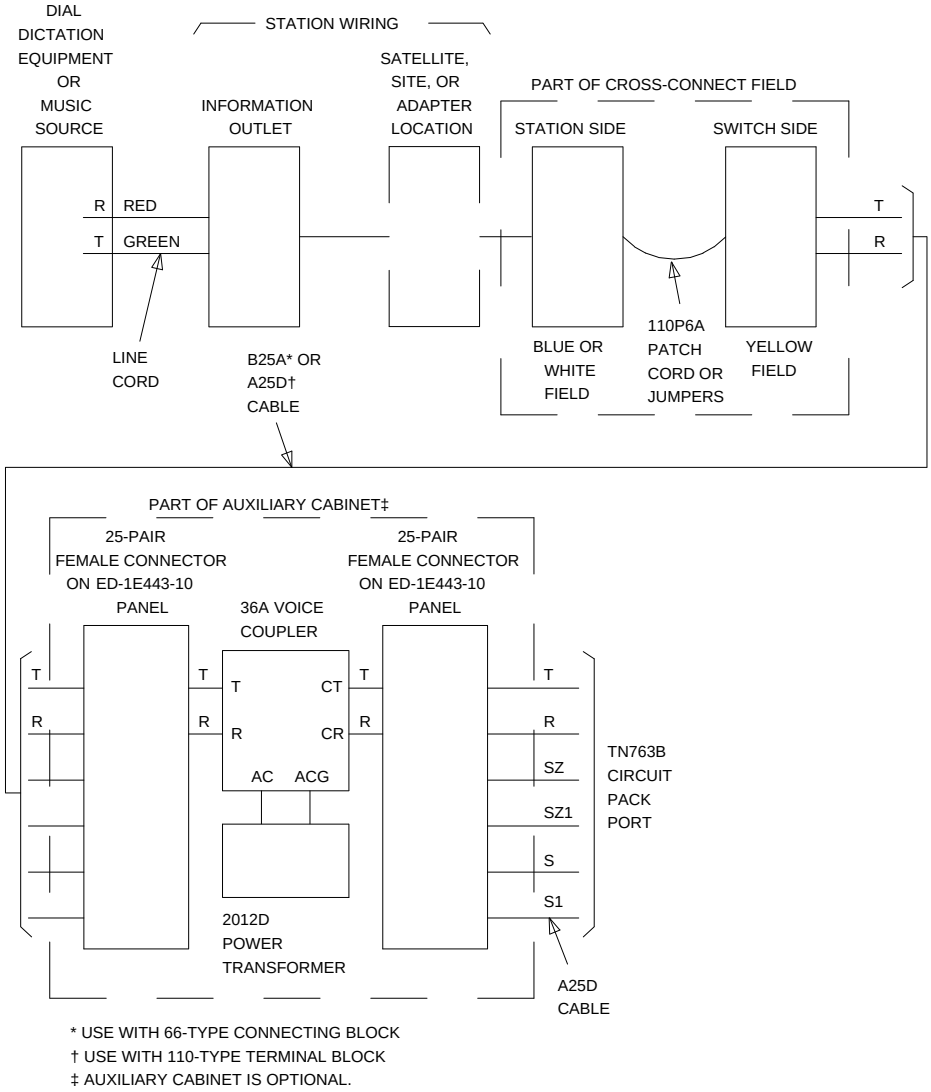

* USE WITH 66-TYPE CONNECTING BLOCK
† USE WITH 110-TYPE TERMINAL BLOCK
‡ AUXILIARY CABINET IS OPTIONAL.

Figure 10-68. Non-FCC-Registered Auxiliary Access to Recorded Telephone Dictation

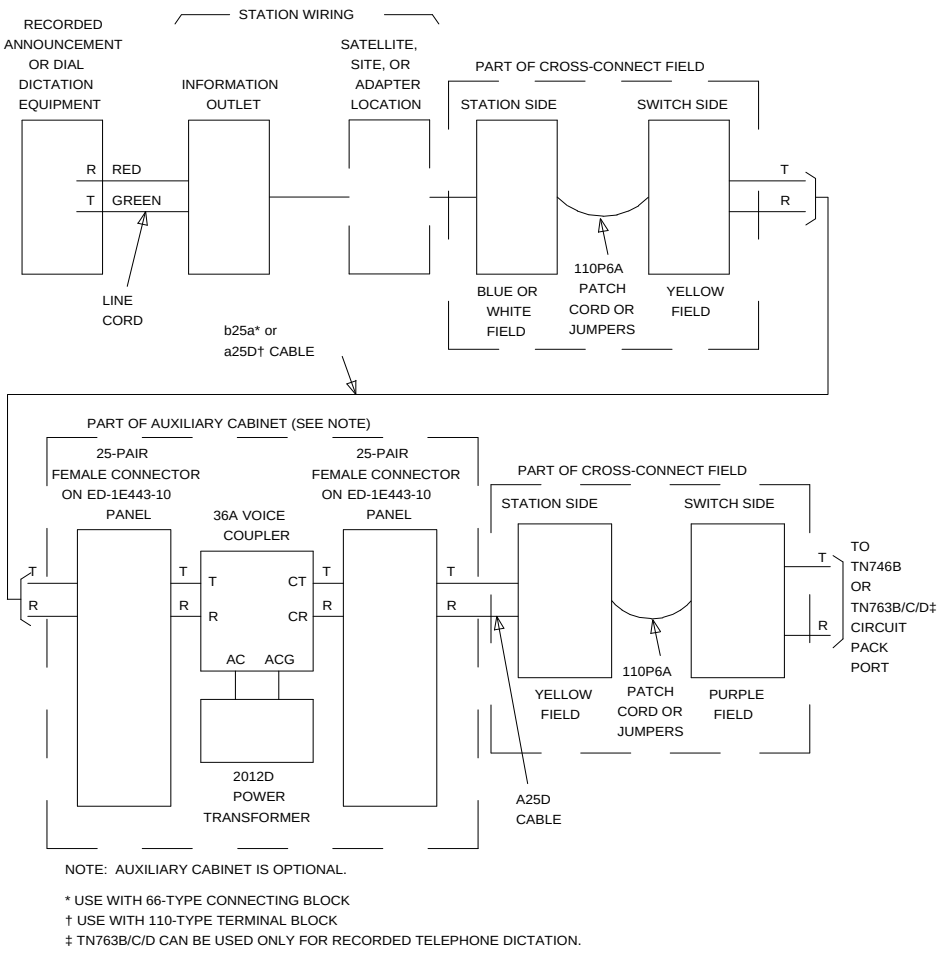

NOTE: AUXILIARY CABINET IS OPTIONAL.

* USE WITH 66-TYPE CONNECTING BLOCK
† USE WITH 110-TYPE TERMINAL BLOCK
‡ TN763B/C/D CAN BE USED ONLY FOR RECORDED TELEPHONE DICTATION.

Figure 10-69. Non-FCC-Registered Analog Access to Recorded Telephone Dictation

29. Add INADS Interface

Requirements

The interface between G3r and the Initialization and Administration System (INADS) is through a two-way loop start trunk and the Processor circuit pack.

Installation

1. The INADS trunk should be specified to appear on the twenty-fifth pair of an RJ21X network-interface jack. The INADS trunk is connected to the UN331B Processor circuit pack through the Trunk/Auxiliary field.

   Detailed descriptions for installing wiring are contained in *DEFINITY Communications System Generic 1 and Generic 3 Installation and Test*, 555-230-104, Issue 5.

2. On the Maintenance-Related System Parameters form, add the private branch exchange (PBX) or product identification, the OSS (INADS) telephone number, and set alarm origination activated field to ‘‘y.’’ The “y” means a call is placed to an OSS when all previously reported alarms are resolved. If this field is set to “n,” the cleared notifcation is not active. Always set the field to “y.” The PBX or product identification and the OSS telephone number must be obtained from the NTSO or the TSC.

30. Add CDR Interface

Requirements

For G3r, three methods of accessing CDR equipment are available:

- Access through an MPDM or modular trunk data module (MTDM) requires a TN754 or TN413 Digital Line circuit pack.
- Access through a 212-type modem and requires an 8-port or a 16-port (with restrictions) Analog Line circuit pack. A TN758 Pooled Modem circuit pack or an external modem pool must also be provided.

  NOTE:
  The 16-port TN746A, TN468A, or TN479 circuit packs do not support the Call Detail Recording Interface.

- Access through a TN726B Data Line circuit pack. A Z3A Asynchronous Data Unit (ADU) is required at the CDR output receiving device. On a G3r, this arrangement also requires that a system access port (enabling Mode 2-to-Mode 3 data conversion) be provided.

Installation

See "9. Add Circuit Packs" on page 10-79 earlier in this chapter, and install the Digital Line, the Analog Line (and if necessary the internal Pooled Modem), or Data Line circuit pack in assigned carrier slot.

Detailed descriptions for installing wiring are contained in *DEFINITY Communications System Generic 1 and Generic 3 Installation and Test*, 555-230-104, Issue 5.

Administer the required translations using the forms listed under ‘‘Call Detail Recording’’ in *DEFINITY Communications System Generic 3 V4 Implementation*, 555-230-655.

31. Add Emergency Transfer

Requirements

Four emergency-transfer panels are supported by G3r:

- 808A emergency-transfer panel — Each unit serves up to five power-failure transfer terminals. The unit provides automatic ground start and "restore after busy," which means that an emergency call proceeds in normal fashion even when the PBX is restored to normal operation.
- PORTA-SYSTEMS™ Model 574-5 panel — Each unit serves up to five power-failure transfer terminals. The unit provides automatic ground start.
- Z1A emergency-transfer panel — Each unit serves up to six power-failure transfer terminals. If the serving central office (CO) requires ground-start trunk signaling, a ground-start key must be installed on each power-failure transfer terminal.
- 609A emergency-transfer panel — Each unit serves up to ten power-failure transfer terminals. If the serving CO requires ground-start trunk signaling, a ground-start key must be installed on each power-failure transfer terminal.

Only 500- or 2500-type voice terminals can be used for emergency transfer. Both the 500- and 2500-type terminals can be used as normal G3r stations.

For detailed wiring information, refer to *DEFINITY Communications System Generic 1 and Generic 3 Installation and Test*, 555-230-104, Issue 5. Also, refer to *AT&T 808A Emergency-Transfer Panel Installation Instructions*, 846-774-701, for detailed instructions on installing the 808A Emergency-Transfer Panel.

32. Add ISN Interface

Requirements

The interface between G3r and the Information Systems Network (ISN) is through an ADU. The ADU connects to an ISN concentrator. This allows G3r and the ISN to share data capabilities.

Installation

1. Determine the port assignment of the ISN from Data Module form:

EXAMPLE:	Port Number	3	B	02	01
		Cabinet (Port Network)	Carrier (or Single-Carrier Cabinet)	Slot	Circuit

2. See "9. Add Circuit Packs" on page 10-79 earlier in this chapter, and install the TN726 Data Line circuit pack in assigned carrier slot (if additional circuit pack is required).
3. Administer the forms listed under ‘‘Information System Network (ISN) Interface’’ in *DEFINITY Communications System Generic 3 V4 Implementation*, 555-230-655.

Detailed descriptions for installing wiring are contained in *DEFINITY Communications System Generic 1 and Generic 3 Installation and Test*, 555-230-104, Issue 5.

33. Add 3270 Data Module

Requirements

The 3270 data module consists of a family of protocol converters that allow 3270-type terminals to communicate with a host computer through the G3r. The three types of 3270 data modules are 3270A, 3270C, and 3270T. The 3270 data modules are connected to the TN754 or TN413 Digital Line circuit pack.

Installation

1. Determine the port assignment of the 3270 data module from Data Module form:

EXAMPLE:	Port Number	3	B	02	01
		Cabinet (Port Network)	Carrier (or Single-Carrier Cabinet)	Slot	Circuit

2. See "9. Add Circuit Packs" on page 10-79 earlier in this chapter, and install the TN754 Digital Line circuit pack in assigned carrier slot (if an additional circuit pack is required).
3. Administer the Data Module form per *DEFINITY Communications System Generic 3 V4 Implementation*, 555-230-655.

Detailed descriptions for installing wiring are contained in *DEFINITY Communications System Generic 1 and Generic 3 Installation and Test*, 555-230-104, Issue 5.

34. Add ISDN—PRI

North American

The North American ISDN—PRI is a 1.544 Mbps digital interface that consists of a 1.536 Mbps signal multiplexed with an 8-kbps framing channel. The 1.536 Mbps is divided into 24 channels of 64 kbps each (23 ‘‘B’’ voice or data channel and 1 ‘‘D’’ signaling channel). The ‘‘D’’ channel multiplexes signaling messages for the 23 ‘‘B’’ channels.

A TN464C DS1/E1 circuit pack is required for the assignment of a signaling link and up to 23 ISDN—PRI Trunk Group members. A TN767C DS1 Interface can also provide up to 24 NFAS B channels. Each DS1 span provides 24 ports. A TN768 or TN780 Tone-Clock circuit pack is required to provide synchronization for the DS1 circuit pack.

As an option to the TN768 Tone-Clock, a TN780 Tone-Clock circuit pack (installed in the PPN) can interface external Stratum 3 synchronization for DS1 connections (See "43. Add Stratum 3 Clock" on page 10-159).

European

The European ISDN—PRI is a 2.048 Mbps digital interface that consists of a 1.920 Mbps signal controlled by two 64-kbps signaling channels. The 1.920 Mbps is divided into 30 ‘‘B’’ channels of 64 kbps each. The two signaling channels multiplex signaling and framing messages for the 30 ‘‘B’’ channels.

A TN464C DS1/E1 circuit pack is required for the assignment of the two signaling channels and up to 30 ISDN—PRI Trunk Group members. Each E1 span provides 32 ports. Except for North American private-network applications, a TN780 or TN419B Tone-Clock circuit pack normally provides synchronization for the DS1/E1 circuit pack.

As an option to the TN419B Tone-Clock, a TN780 Tone-Clock circuit pack (installed in the PPN) can interface external Stratum 3 synchronization for DS1 connections (See "43. Add Stratum 3 Clock" on page 10-159).

Add Circuit Packs

1. Determine the port assignments of the circuit packs to be added.
2. See "9. Add Circuit Packs" on page 10-79 earlier in this chapter, and install the TN464C DS1/E1 Interface or TN767C DS1 Interface circuit pack in assigned carrier slot.
3. See "9. Add Circuit Packs" on page 10-79 earlier in this chapter, and install a TN748B Tone Detector circuit pack if required.

Install Cables

Install cables from cabinet to cross-connect field as required.

Detailed descriptions for installing wiring are contained in *DEFINITY Communications System Generic 1 and Generic 3 Installation and Test*, 555-230-104, Issue 5.

Enter Added Translations

Administer forms listed under ‘‘Integrated Services Digital Network — Primary Rate Interface’’ in *DEFINITY Communications System Generic 3 V4 Implementation*, 555-230-655.

Save Translations

1. If the system is high- or critical-reliability, enter **`status spe`**, and press (RETURN) to verify that the standby SPE is refreshed and that the standby disk is in service.
2. Enter **`save translation [spe-a or both] disk`**, and press (RETURN). This command instructs the system to take all translation information in memory and write it to the disk(s).
3. Enter **`backup disk [spe-a or both]`** and press (RETURN). This command instructs the system to backup the current information on disk to the system tape(s).
4. Update backup tape(s), if required.

35. Add CMS Interface

Requirements

See NOTE. The G3r interface to the CMS is from a TN577 Packet Gateway through a PDM.

NOTE:
For a connection from a G3r through a 105-series IDI to a CMS, the 105A IDI should not be reused. Instead, use a 105B IDI (PEC 65599, COMCODE 105778179) to minimize incompatibilities with the TN577 Packet Gateway circuit pack.

Add Circuit Packs

1. Determine the port assignment of the TN577 circuit pack to be added.

EXAMPLE:	Port Number	3	B	02	01
		Cabinet (Port Network)	Carrier (or Single-Carrier Cabinet)	Slot	Circuit

2. See "9. Add Circuit Packs" on page 10-79 earlier in this chapter, and install the TN577 circuit pack(s) in assigned carrier slot (as required).

Install Cables

Install cables from cabinet to cross-connect field as required.

Detailed descriptions for installing wiring are contained in *DEFINITY Communications System Generic 1 and Generic 3 Installation and Test*, 555-230-104, Issue 5.

Enter Added Translations

Administer the required translation data using the forms listed under Call Management System (CMS) Interface in *DEFINITY Communications System Generic 3 V4 Implementation*, 555-230-655.

Save Translations

1. If the system is high- or critical-reliability, enter **`status spe`**, and press (RETURN) to verify that the standby SPE is refreshed and that the standby disk is in service.
2. Enter **`save translation [spe-a or both] disk`**, and press (RETURN). This command instructs the system to take all translation information in memory and write it to the disk(s).
3. Enter **`backup disk [spe-a or both]`** and press (RETURN). This command instructs the system to backup the current information on disk to the system tape(s).
4. Update backup tape(s), if required.

36. Add AUDIX Interface

Requirements

The G3r interface to an AUDIX adjunct is through PDMs, either from a TN577 Packet Gateway or from a TN754 or TN413 Digital Line.

Up to sixteen ports from 8-port or 16-port (with restrictions) Analog Line circuit packs are also required for voice retrieval.

NOTE:
The 16-port TN746A, TN468A, or TN479 circuit packs do not support AUDIX voice retrieval.

Add Circuit Packs

1. Determine the port assignments of the circuit packs to be added.

EXAMPLE:	Port Number	3	B	02	01
		Cabinet (Port Network)	Carrier (or Single-Carrier Cabinet)	Slot	Circuit

2. See "9. Add Circuit Packs" on page 10-79 earlier in this chapter, and install the appropriate circuit pack(s) in assigned cabinet slot (as required).

   Up to sixteen vacant ports are required on Analog Line circuit packs.

   A TN577 Packet Gateway or a vacant port on a TN754 Digital Line circuit pack is required.

Install Cables

Install cables from cabinet to cross-connect field as required.

Detailed descriptions for installing wiring are contained in *DEFINITY Communications System Generic 1 and Generic 3 Installation and Test*, 555-230-104, Issue 5.

Enter Added Translations

Administer the required translation data using the forms listed under ‘‘Audio Information Exchange (AUDIX) Interface’’ in *DEFINITY Communications System Generic 3 V4 Implementation*, 555-230-655.

Save Translations

1. If the system is high- or critical-reliability, enter **`status spe`**, and press (RETURN) to verify that the standby SPE is refreshed and that the standby disk is in service.
2. Enter **`save translation [spe-a or both] disk`**, and press (RETURN). This command instructs the system to take all translation information in memory and write it to the disk(s).
3. Enter **`backup disk [spe-a or both]`** and press (RETURN). This command instructs the system to backup the current information on disk to the system tape(s).
4. Update backup tape(s), if required.

37. Add DEFINITY AUDIX System

The DEFINITY AUDIX System is an integrated hardware assembly (consisting of a TN556 Multifunction circuit pack, a TN2169 Alarm circuit pack, a disk drive, and a tape unit) that resides in five contiguous port slots of either a G3r expansion control carrier or port carrier.

Requirements

In order to give this assembly proper cooling, certain recommendations for its placement within a G3r system should be followed. Providing optimum cooling may require that up to five port circuit packs be relocated and retranslated.

First, if possible, locate a DEFINITY AUDIX System in the same equipment room as the PPN.

See NOTE. Second, locate a DEFINITY AUDIX System in a carrier with close proximity to a cabinet's fan assembly.

NOTE:
Never locate a DEFINITY AUDIX System in port carrier ''C'' of a multicarrier cabinet.

See NOTE. Third, to minimize the voltage drop on a single-carrier cabinet, locate a DEFINITY AUDIX System as far to the right side of the single-carrier cabinet as possible.

NOTE:
Never locate a DEFINITY AUDIX System either in port slots ''01'' to ''03'' of an expansion control cabinet or in ''01'' to ''04'' of a port cabinet.

Installation

1. If necessary, to provide five contiguous port slots in a desirable location, relocate and retranslate port circuit packs. See "9. Add Circuit Packs" on page 10-79 earlier in this chapter.
2. Unpack the DEFINITY AUDIX System and inspect for damage. Report any damage for appropriate action per local procedures.

3. See CAUTION. It is not necessary to power down a G3r system before installing a DEFINITY AUDIX System.

   CAUTION:
   Although the AUDIX assembly can be installed in a live G3r system, be careful to protect the AUDIX assembly. Later, when the assembly is inserted, it will automatically power up (including the disk), run diagnostics, and boot. Therefore, to avoid an AUDIX disk crash, never remove the AUDIX assembly and never power down the G3r system without first shutting down the AUDIX assembly and allowing the disk to completely spin down.

4. See CAUTION. Prepare to install the AUDIX assembly Y-cables behind the selected port slots. For details, refer to *DEFINITY AUDIX System Installation and Upgrade*, 585-300-118.

   CAUTION:
   To prevent damage to the AUDIX assembly, be sure that you install these cables before actually inserting the AUDIX assembly.

5. Continue installing the AUDIX assembly; refer to *DEFINITY AUDIX System Installation and Upgrade*, 585-300-118, for detailed information.
6. See NOTE. For information about administering a DEFINITY AUDIX installation, refer to *Switch Administration for DEFINITY AUDIX System*, 585-300-509.

   NOTE:
   The switch treats an installed DEFINITY AUDIX System as a TN754 Digital Line circuit pack connected to up to eight 7405D display voice terminals. These emulated stations (serving as AUDIX voice ports) are assigned as members of a hunt group that resides in a coverage path. Then, this coverage path is used by every station that covers to AUDIX. Also, AUDIX subscribers access the AUDIX system and retrieve messages by dialing the hunt group's access number.

38. Add PMS Access

Requirements

The interface between G3r and the customer's PMS can either be through a PDM or an ADU. PDM connections require a port of a TN754 or TN413 Digital Line circuit pack, whereas ADU connections require a port of a TN726B Data Line circuit pack.

On a G3r, the ADU arrangement also requires that a system access port (enabling Mode 2-to-Mode 3 data conversion) be provided.

Installation

1. Determine the Digital Line or the Data Line port assignment from Data Module form:

EXAMPLE:	Port Number	3	B	02	01
		Cabinet (Port Network)	Carrier (or Single-Carrier Cabinet)	Slot	Circuit

2. See "9. Add Circuit Packs" on page 10-79 earlier in this chapter, and install the TN754 Digital Line circuit pack or the TN726B Data Line circuit pack in assigned carrier slot (if an additional circuit pack is required).
3. Administer the forms listed under "Property Management System Interface'' in *DEFINITY Communications System Generic 3 V4 Implementation*, 555-230-655.

Detailed descriptions for installing wiring are contained in *DEFINITY Communications System Generic 1 and Generic 3 Installation and Test*, 555-230-104, Issue 5.

39. Replace Two 8-Port with 16-Port Analog Pack

Requirements

When there is a need for more lines and the carrier port slots are full, this change-out will free a slot to add another circuit pack.

Assuming acceptable signaling characteristics for a specific system's venue, a 16-port TN746B, TN468B, TN2135, TN2144, or TN2149 Analog Line circuit pack can replace two 8-port packs with no functional limitations.

However, a 16-port TN746, TN468, or TN479 circuit pack has some limitations to consider when replacing 8-port TN742, TN746, TN769, or TN467 circuit packs. The functional limitations of the TN746, TN468, or TN479 are as follows:

- Cannot be used for off-premises or out-of-building extensions
- Cannot be used for bridging
- Does not support voice terminals or modems or other vendor equipment requiring 48 volts. The TN746, TN468, and TN479 provide a 24-volt battery feed circuit and will support only 500-series and 2500-series voice terminals with no adjuncts.

The TN746B, TN468B, TN2135, TN2144, and TN2149 can be used off premises with no limitations, but do not support neon message waiting.

Installation

1. For all stations (external alerting devices, announcements, etc.) that are assigned ports from a slot that currently has an 8-port Analog Line circuit pack administered, change the port assignments to temporary ports. (These temporary ports can either be spare ports on real analog boards or from spare slots that are administered as having analog boards. If there are no spare analog ports or spare slots, the stations must be removed from the system.)
2. See WARNING. Remove the two circuit packs to be replaced.

   WARNING:
   Before inserting or removing a circuit pack from a cabinet, put on a wrist strap and attach its plug or clip to the cabinet's frame.

   Determine the slot (any port slot) for the 16-port circuit pack, and align and slide circuit pack with latch lever opened into slot until some resistance is felt.

3. Lift locking lever upward until latch pin engages.
4. Behind the carrier, disconnect B25A cables from both slots.
5. Connect single end of 853B (Y) adapter cable to the 16-port circuit pack's slot on carrier.
6. Connect the two B25A cables to the double end of the 853B adapter cable.
7. At cross-connect field, change jumper wires or patch cords as required. Detailed descriptions for installing wiring are contained in *DEFINITY Communications System Generic 1 and Generic 3 Installation and Test*, 555-230-104, Issue 5.
8. Readminister the stations from Step 1 with the same ports that were taken away.
9. Administer the second eight ports on the 16-port pack as required in *DEFINITY Communications System Generic 3 V4 Implementation*, 555-230-655.
10. Type in the **`list configuration board`** command or the **`display circuit-packs`** command to verify that the resident board is recognized as the correct 16-port circuit pack. If the board still appears as an 8-port circuit pack, reseat the board, and repeat this step.

40. Add DCS Interface

Systems in a DCS network are interconnected by both tie trunks (for voice communications) and data links (for control and transparent feature information). These data links, also called DCS signaling links, support the feature transparency.

Various subsets (depending on the specific configuration) of DS1 Interface circuit packs (including TN464C, TN767C, TN722, and TN760) provide thee voice-communications interface.

Meanwhile, for G3r, the interface (between the SPE and the physical signaling link) is provided by (or through) a TN577 Packet Gateway circuit pack. In some configurations, the TN577 passes the signaling information over a separate tie facility (usually via a DSU or PDM). In other configurations, the TN577 loops the signaling information through a PDM to a TN574 or TN413 Digital Line circuit for subsequent inclusion (via the switching fabric) in the same DS1 bit stream as the DCS voice transmissions.

As an option to the TN768 Tone-Clock, a TN780 Tone-Clock circuit pack (installed in the PPN) can interface external Stratum 3 synchronization for DS1 connections (See "43. Add Stratum 3 Clock" on page 10-159).

For further information about DCS, refer to the following documents:

- *AT&T System 75/85 Network and Data Services Reference Manual*, 555-025-201
- *DEFINITY Communications System Generic 3 Feature Description*, 555-230-204
- *System 75 Application Notes Network Services*, 555-209-002

Add Circuit Packs

1. Determine the port assignments of the circuit packs to be added.
2. See "9. Add Circuit Packs" on page 10-79 earlier in this chapter, and install the appropriate circuit pack(s) in assigned cabinet slot (as required).

   A TN464C, TN767C, TN722 or TN760 DS1 circuit pack is required.

   A TN577 Packet Gateway circuit pack is required.

   In some configurations, a vacant port on a TN754 or TN413 Digital Line circuit pack is required.

Install Cables

Install cables from cabinet to cross-connect field as required.

Detailed descriptions for installing wiring are contained in *DEFINITY Communications System Generic 1 and Generic 3 Installation and Test*, 555-230-104, Issue 5.

Enter Added Translations

To enable DCS, set the DCS field on the System Parameters-Customer Options form to "y."

Administer the other required translation data using the forms listed under Distributed Communications System (DCS) in *DEFINITY Communications System Generic 3 V4 Implementation*, 555-230-655.

Save Translations

1. If the system is high- or critical-reliability, enter **`status spe`**, and press (RETURN) to verify that the standby SPE is refreshed and that the standby disk is in service.
2. Enter **`save translation`** [**`spe-a`** or **`both`**] **`disk`**, and press (RETURN). This command instructs the system to take all translation information in memory and write it to the disk(s).

41. Add Customer-Provided Alarm

A major, minor, and warning alarm is provided by the system to a customer-provided device such as a lamp or bell.

The CPE Alarm Activation Level field on the System-Parameters Maintenance form must be administered to indicate which level of alarm (major, minor, warning, or none) should activate the CPE device.

Detailed descriptions for installing wiring are contained in *DEFINITY Communications System Generic 1 and Generic 3 Installation and Test*, 555-230-104, Issue 5.

42. Add CallVisor ASAI

Requirements

CallVisor™ ASAI (also known as LAN Gateway) provides up to eight ISDN BRI-based interfaces between the G3r switch and a computer adjunct. The services provided by a CallVisor ASAI adjunct improves switch efficiency by initiating, receiving, and controlling calls on behalf of system users.

NOTE:
The ASAI protocol does not support passive bus (multipoint drop) connections (that would allow multiple endpoints to contend for an available B channel over the D channel). Therefore, each ASAI adjunct connection requires a separate port of a 12-port TN556 ISDN—BRI circuit pack.

Enter Added Translations

On the System-Parameters Customer-Options form, be certain that the Calling Party Number/Billing Number (CPN/BN) option is disabled, and enable the CallVisor ASAI Interface option. (Either CallVisor ASAI or CPN/BN can be enabled on the switch, but not both.) See *DEFINITY Communications System Generic 3 V4 Implementation*, 555-230-655, for details on disabling and enabling options on these forms.

Add Circuit Packs

1. Determine the port assignments of the circuit packs to be added.
2. See "9. Add Circuit Packs" on page 10-79 earlier in this chapter, and install the appropriate circuit pack(s) in assigned cabinet slot (as required).

EXAMPLE:	Port Number	3	B	02	01
		Cabinet (Port Network)	Carrier (or Single-Carrier Cabinet)	Slot	Circuit

In addition to the TN748C Tone Detector, a TN744 Call Classifier circuit pack is required for those customers who desire switch call classification for Outbound Call Management (OCM).

A vacant port is required on a TN556 ISDN—BRI circuit pack.

Install Cables

Install cables from cabinet to cross-connect field as required.

Detailed descriptions for installing wiring are contained in *DEFINITY Communications System Generic 1 and Generic 3 Installation and Test*, 555-230-104, Issue 5.

Enter Added Translations

Administer the required translation data using the forms listed under "Adjunct/Switch Applications Interface (ASAI)" in *DEFINITY Communications System Generic 3 V4 Implementation*, 555-230-655.

Save Translations

1. If the system is high- or critical-reliability, enter **`status spe`**, and press (RETURN) to verify that the standby SPE is refreshed and that the standby disk is in service.
2. Enter **`save translation [spe-a or both] disk`**, and press (RETURN). This command instructs the system to take all translation information in memory and write it to the disk(s).
3. Enter **`backup disk [spe-a or both]`** and press (RETURN). This command instructs the system to backup the current information on disk to the system tape(s).
4. Update backup tape(s), if required.

43. Add Stratum 3 Clock

DEFINITY G3r can be equipped with higher-accuracy Stratum 3 synchronization by using an external Stratum 3 clock and interface circuit packs. Stratum 3 clock synchronization can be used on standard-, high-, or critical-reliability systems.

The external clock is mounted at the cross connect field. One TN780 Tone-Clock circuit pack is required for standard-reliability systems, two for high- or critical-reliability systems.

Service Interruption

Since the addition of a Stratum 3 clock requires a service interruption, notify the customer in advance as to when the addition will be carried out.

Verify System Status

Before proceeding, the system should be examined for alarms, and every problem should be corrected. The system must be alarm-free.

Save Translations

1. Log in at the G3-MT terminal.
2. If the system is high- or critical-reliability, enter **`status spe`**, and press (RETURN) to verify that the standby SPE is refreshed and that the standby disk is in service.
3. Enter **`save translation [spe-a or both] disk`**, and press (RETURN). This command instructs the system to take all translation information in memory and write it to the disk(s).
4. If the PPN contains a TN750 Announcement circuit pack, enter **`display announcements`**, and press (RETURN).

   If administered recorded announcements are listed, enter **`list configuration software-version`**, press (RETURN). Check Page 2 of this form to find out when the announcements were last saved, and ask the customer whether any announcements have changed since then.

   If so, the current announcements can be saved using the save announcements command. Enter **`save announcements disk`**, and press (RETURN).
5. Enter **`backup disk [spe-a or both]`** and press (RETURN). This command instructs the system to backup the current information on disk to the system tape(s).
6. Update backup tape(s), if required.

Shut Down DEFINITY AUDIX System

1. See WARNING. If a DEFINITY AUDIX System resides in the PPN, shut down the AUDIX assembly and allow the disk to completely spin down.

   WARNING:
   Neglecting to shut down an AUDIX assembly before powering down the system cabinet where it resides can damage the AUDIX disk.

2. See WARNING. To avoid an unexpected AUDIX reboot after an unplanned switch reboot, unseat the AUDIX assembly from its backplane connectors.

   WARNING:
   Before inserting or removing a circuit pack from a cabinet, put on a wrist strap and attach its plug or clip to the cabinet's frame.

Power Down PPN

At the PPN, on the power-distribution unit, set the main circuit breaker to OFF.

Install the Clock Unit

Install the External Clock. See *DEFINITY Communications System Generic 1 and Generic 3 Installation and Test*, 555-230-104, Issue 5, for the installation information.

Install Circuit Packs

1. See WARNING. At the TONE-CLOCK slot of the PPN's control carrier, remove the TN768 Tone-Clock circuit pack and replace it with a TN780 Tone-Clock circuit pack.

   WARNING:
   Before inserting or removing a circuit pack from a cabinet, put on a wrist strap and attach its plug or clip to the cabinet's frame.

2. If the system is duplicated, repeat Step 1 for the PPN's other control carrier.

Install Cables

Install cables from cabinet to cross-connect field as required.

Detailed descriptions for installing wiring are contained in *DEFINITY Communications System Generic 1 and Generic 3 Installation and Test*, 555-230-104, Issue 5.

Reseat DEFINITY AUDIX System

See WARNING. If a DEFINITY AUDIX System resides in the PPN, reseat the AUDIX assembly to its backplane connectors.

WARNING:
Before inserting or removing a circuit pack from a cabinet, put on a wrist strap and attach its plug or clip to the cabinet's frame.

Power Up PPN

1. At the PPN, on the power-distribution unit, set the main circuit breaker to ON.
2. The system now goes through the level 4 rebooting process, loading the system translations from the disk. Rebooting takes 5 to 11 minutes.

   Refer to ''Initialization and Recovery'' and ''LED Interpretation'' chapters in *DEFINITY Communications System Generic 3r V4 Maintenance*, 555-230-105, Issue 4, for circuit-pack LED indications and G3-MT terminal displays that occur during system reboot.
3. After the system reboot is finished and all trouble is cleared, verify that the EMERGENCY TRANSFER CONTROL switch is set to AUTO. This restores the system to the normal mode.

Enter Added Translations

Administer forms listed under ''DS1 Trunk Service'' in *DEFINITY Communications System Generic 3 V4 Implementation*, 555-230-655.

Save Translations

1. If the system is high- or critical-reliability, enter **`status spe`**, and press (RETURN) to verify that the standby SPE is refreshed and that the standby disk is in service.
2. Enter **`save translation [spe-a or both] disk`**, and press (RETURN). This command instructs the system to take all translation information in memory and write it to the disk(s).
3. Enter **`backup disk [spe-a or both]`** and press (RETURN). This command instructs the system to backup the current information on disk to the system tape(s).
4. Update backup tape(s), if required.

44. Add ISDN—BRI

Requirements

BRI provides an ISDN-based interface between the G3r switch and one or more stations or voice terminals.

Add Circuit Packs

1. Determine the port assignments of the circuit packs to be added.
2. See "9. Add Circuit Packs" on page 10-79 earlier in this chapter, and install the appropriate circuit pack(s) in assigned cabinet slot (as required).

EXAMPLE:	Port Number	3	B	02	01
		Cabinet (Port Network)	Carrier (or Single-Carrier Cabinet)	Slot	Circuit

The TN556 or TN2198 ISDN — BRI circuit pack is required.

Install Cables

Install cables from cabinet to cross-connect field as required.

Detailed descriptions for installing wiring are contained in *DEFINITY Communications System Generic 1 and Generic 3 Installation and Test*, 555-230-104, Issue 5.

NOTE:
BRI requires a 12-port terminating resistor block (110AR1-12) for the 25-pair cable. This terminator is different from the 8-port 440A4 terminating block previously used for DCP.

Enter Added Translations

Administer the required translation data using the forms listed under 7500D voice terminals and 8500 voice terminals in *DEFINITY Communications System Generic 3 V4 Implementation*, 555-230-655.

Save Translations

1. Enter **`save translation [spe-a or both] disk`**, and press (RETURN). This command instructs the system to take all translation information in memory and write it to the disk(s).
2. Enter **`backup disk [spe-a or both]`** and press (RETURN). This command instructs the system to backup the current information on disk to the system tape(s).
3. Update backup tape(s), if required.

45. Add ISDN Voice Terminals

ISDN-BRI voice terminals can be added to the system as endpoints. The DEFINITY G3r supports the 7505, 7506, 7507, 8503T, and 8510T voice terminals.

For instructions on adding BRI voice terminals, see *DEFINITY Communications System Generic 1 and Generic 3 Installation and Test*, 555-230-104, Issue 5.

46. Add G3-MT or G3MA

Up to eight terminal-based (G3-MT) and/or PC-based (G3-MA) administration devices can be used. For detailed information about installing a G3-MT terminal, refer to Chapter 5 of *DEFINITY Communications System Generic 1 and Generic 3 Installation and Test*, 555-230-104, Issue 5. For detailed information about installing a G3-MA PC, refer to *DEFINITY Communications System Generic 3 Management Applications Connectivity and Installation*, 585-229-206.

Brief terminal connection instructions are provided below. For detailed connection and usage instructions, refer to the following documents: For the 715 BCS terminal, see the *AT&T Information Systems 715 BCS User's Guide and Service Manual.* For the 715 GBCS terminal, see the *2900/715 GBCS User's Guide and Service Manual.* For the 715 GBCS-2 terminal, see the *715 GBCS -2 User's Guide and Service Manual*, 555-230-876.

715 BCS Terminal

To connect the 715 BCS terminal, perform the following:

1. Plug the keyboard cable into the 6-pin DIN jack on the rear of the terminal
2. Plug the 25-pin DTE cable into the P2 port (center connector) on the rear of the terminal.
3. Change the autowrap option setting on PRIMARY/WINDOW 1 and WINDOW 2 from on to off to make the power-up option settings compatible with the G3r. The customer will not have to change any option settings on the 715 BCS after powering up.

715 GBCS Terminal (2900/715)

To connect the 2900/715 GBCS terminal, perform the following:

1. Plug the keyboard cable into the 6-pin RJ-11 jack on the left side of the terminal. An adapter cable is available to convert a 6-pin DIN jack to an RJ-11 jack to allow a 715 BCS keyboard to be used
2. Plug the 25-pin DTE cable into the P2 port (right side connector looking from the rear of the terminal)

715 GBCS-2 Terminal

To connect the 715 GBCS-2 terminal, perform the following:

1. Plug the keyboard cable into the keyboard jack on the rear of the terminal. This is a unique cable and must be connected to the 715 GBCS-2 only.
2. Plug the 25-pin DTE cable into the COM1 port (right side connector looking from the rear of the terminal).

47. Add Wideband Switching

With a single call setup per call, Wideband Switching supports high-bandwidth end-to-end connectivity between customer endpoints. These calls can transmit data at rates (in DS0, or 64-kbps, increments) either between 128 and 1536 kbps over T1 facilities or between 128 and 1984 kbps over E1 facilities. As a result, G3 V4 systems also support CCITT-defined data-service rates (including H0 — 384 kbps or 6 DS0s, H1 — 1536 kbps or 24 DS0s, and H2 — 1920 kbps or 30 DS0s).

Wideband Switching allows for services and applications that require high bandwidth, such as:

- High-speed video conferencing
- Data backup
- Scheduled batch processing
- Primary data interfaces

For these purposes, G3 V4 systems support wideband connectivity:

- Within private networks (including ETNs)
- With offerings from a variety of domestic IXCs and RBOCs
- With offerings from a variety of international carriers

However, with Wideband Switching, dedicated network facilities are no longer required for high-speed services. Instead, switched wideband network access can readily be used to cost-effectively:

- Serve as a reliable switched backup to a failure of dedicated network facilities
- Supplement the capacity of dedicated facilities to avoid provisioning enough dedicated facilities to handle peak traffic volumes

Configuration

At a high level, a G3 V4 system interfaces a wideband endpoint with a TN464C DS1/E1 Interface circuit pack. Also, either an AT&T ACCULINK™ Bandwidth Controller or an Ascend Multiband[1] Plus resides between the wideband endpoint (or, ‘‘application host’’) and the G3 V4 system (See Figure 10-70).

1. Trademark of Ascend Communications, Inc.

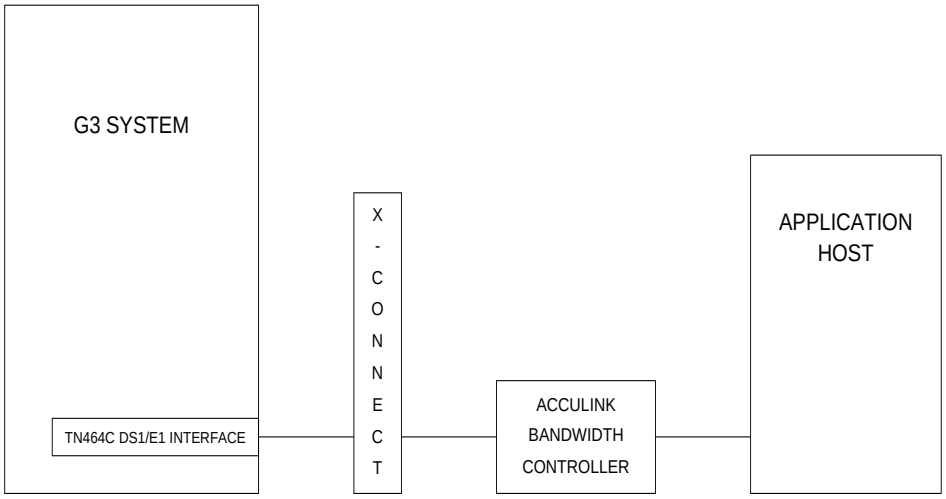

Figure 10-70. G3 V4 Connection to Wideband Endpoint

Installation

For instructions about connecting Wideband Switching equipment to a G3 V4 system, see *DEFINITY Communications System Generic 1 and Generic 3 Installation and Test*, 555-230-104, Issue 5.

For instructions about installing an ACCULINK Bandwidth Controller for use in Wideband Switching, see:

- *ACCULINK Bandwidth Controller System Guide*, 314-620-300
- *ACCULINK Bandwidth Controller Operating Guide*, 314-620-301
- *ACCULINK Bandwidth Controller Application and Release Notes*, 314-620-302

Administration

For instructions about assigning Wideband Switching to a G3 V4 system, see:

- *DEFINITY Communications System Generic 3 V4 Implementation*, 555-230-655.
- *DEFINITY Communications System Generic 3 V4 Wideband Technical Reference*, 555-230-230, Chapter 3.

48. Add OVATION System

The four models of the AT&T OVATION voice messaging system (Models 2000, 4000, 6000, and SSP) provide voice mail, fax mail, integrated distribution of voice and fax information, and customized call processing.

An OVATION system supports a variety of telecommunications interfaces that conform to both North American and international standards. Also, where a specific switching system or national telecommunications network may deviate from standards, an OVATION system can often be translated to adjust its interface criteria to the peculiar requirements of the adjacent system.

The system's modular configuration and distributed architecture provide high reliability, incremental growth, and simple upgrading for a variety of applications in:

- Corporate message centers
- Voice- and fax-mail service bureaus
- Customer services and telemarketing
- Sales-force management

Configuration

At a high level, a G3 V4 system interfaces an OVATION system with digital signaling ports and analog voice ports (See Figure 10-71). Each signaling port, a TN754 or TN413 Digital Line circuit, connects either to a Switch Integration Device or to a VTG Voice Bridge[2] Series II residing between the G3 V4 system and the OVATION system. Using busy-indication information received from the signaling port, the Switch Integration Device controls the signaling for up to 24 directly connected voice ports, which can be composed of a variety of the G3 V4 Analog Line circuits.

Using three signaling ports, Switch Integration Devices, and COM ports, up to 64 voice ports can deliver messages to an OVATION system.

2. Trademark of Voice Technologies Group, Inc.

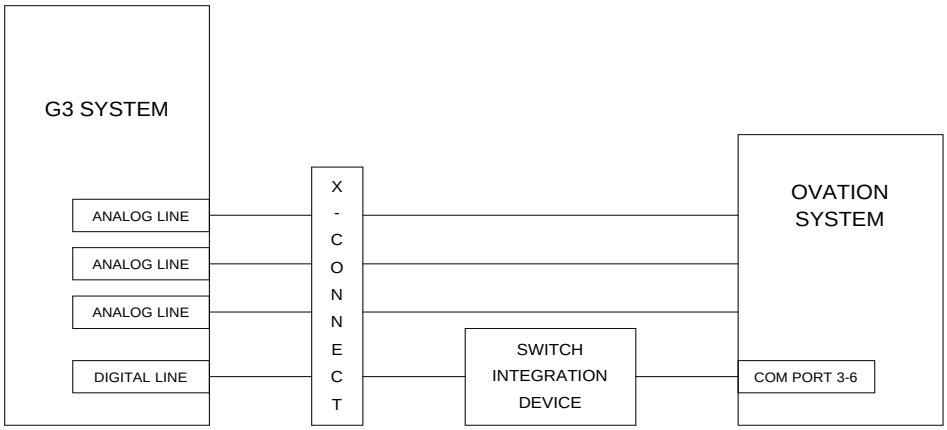

Figure 10-71. G3 V4 Connection to an OVATION System

Installation and Administration

For instructions about installing digital and analog line circuits as the G3 V4 interface to an OVATION system, see "9. Add Circuit Packs" on page 10-79 earlier in this chapter.

For instructions about assigning a G3 V4 system to interface an OVATION system, see *Voice Bridge Series II AT&T Installation*, Chapter 1.

For instructions about installing the Switch Integration Device, see *Voice Bridge Series II AT&T Installation*, Chapter 2.

For instructions about installing an OVATION system, refer to the model's installation manual shipped with the specific system.

49. Add Greater Than Twenty-Second Port Network to G3r V3 System

The twenty-third port network cannot be added to a G3r V3 system until a third TN1650B Memory circuit pack resides in each PPN control carrier.

Refer to "6. Add Control Carrier" on page 10-35 of this chapter for instructions on installing the new memory. Then, refer to *DEFINITY Communications System Generic 1 and Generic 3 Installation and Test*, 555-230-104, Issue 5, for instructions on installing the EPN.

50. Add Third Switch Node to G3r V3 System

The third switch node cannot be added to a G3r V3 system until a third TN1650B Memory circuit pack resides in each PPN control carrier.

Refer to "6. Add Control Carrier" on page 10-35 of this chapter for instructions on installing the new memory. Then, refer to *DEFINITY Communications System Generic 1 and Generic 3 Installation and Test*, 555-230-104, Issue 5, for instructions on installing the EPN.

51. Add 302B1 Attendant Console

Requirements

The 302B1 attendant console has the same capabilities and appearance as the 302A1 console, but can operate with either a 2-wire or 4-wire DCP interface to the system. This console automatically detects the wire count of its interface and establishes the correct DCP link accordingly.

Like the 302A1 console and any voice terminal, a 302B1 attendant console is connected to an information outlet (modular wall connecting block).

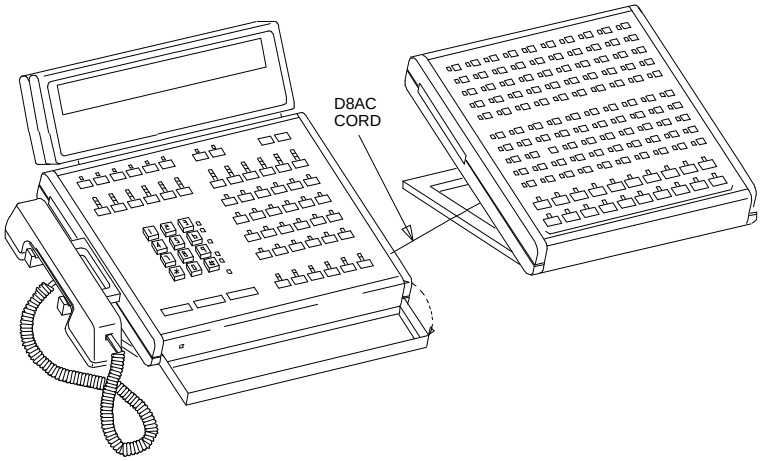

Figure 10-72. 302B1 Console and 26A1 Selector Console

Hard-Wire Bridging

Analog-type hard-wire bridging has never been allowed for 4-wire (only) DCP endpoints such as 302A1 consoles and 7400-series voice terminals. This is because, from the *outgoing* perspective of these endpoints, hard-wire bridging provides no way of combining the digital output of two bridged DCP sets. From the *incoming* perspective, a bridged endpoint causes enough additional load to degrade the fairly wide-spectrum DCP signal. (And, 2-wire DCP interfaces require twice the spectrum of 4-wire interfaces.)

See CAUTION. Likewise, hard-wire bridging is not allowed for a 302B1 console installed with either a 2- or 4-wire interface to the system.

CAUTION:
Bridging or paralleling these endpoints can either cause:

- *Electrical damage to the consoles*
- *The system's circuit pack to remove power from the consoles*

Dual Wiring of 2-Wire and 4-Wire Endpoints

See previous CAUTION. A 2-wire and a 4-wire endpoint cannot be simultaneously wired to the same equipment location in a cross-connect field, even though they connect to differently colored wire pairs. The system uses separate circuit packs to interface 2- and 4-wire endpoints, and none of these circuit packs are capable of interfacing both.

Phantom Power

Since, like DCP voice terminals, a 302B1 derives power for essential telecommunications functions through its DCP interface, a console's maximum distance from the system is limited. This maximum distance for a 302B1 is:

- 5000 feet at 24AWG using 4-wire DCP interface
- 3400 feet at 26AWG using 4-wire DCP interface
- 4250 feet at 22AWG using 2-wire DCP interface
- 1650 feet at 26AWG using 2-wire DCP interface

Auxiliary Power

See NOTE. The nonessential functions of a 302B1 console and its optional 26A1 or 24A1 selector console derive their power from an auxiliary power source. Out of the G3r V3 maximum of 27 attendant consoles, three of the consoles connected to each cabinet or single-carrier cabinet stack can derive auxiliary power from the system and through the auxiliary cable located in the trunk/auxiliary field. Whenever possible, auxiliary power for a primary attendant console should be provided through this cable so that the console remains fully operational during short power outages.

NOTE:
For a console connected to an MCC G3r system to realize the longest possible nominal battery holdover of 10 minutes, the console's:

- TN754 or TN413 (for 4-wire connectivity)
- TN2181 (for 2-wire connectivity)

Digital Line circuit should reside in an EPN's expansion control carrier.

Depending on the location, a console connected to a circuit pack in another MCC G3r carrier will receive no more than 15 seconds of holdover. Whereas, a console connected to a circuit pack in any single-carrier cabinet will receive 1/4 second of holdover.

An attendant console can also derive auxiliary power from either:

- Individual MSP-1 power supplies or 258A-type adaptors, or
- Bulk power supplies such as the 1145A1

located at the cross-connect field, at an information outlet, or at the attendant console's site.

A 302B1 console's maximum distance from its auxiliary power source is 800 feet.

Installation

1. Unpack the attendant console and inspect for damage. Report any damage for appropriate action per local procedures.
2. Determine the port assignment of the console from Attendant Console form.

EXAMPLE:	Port Number	2	A	04	06
		Cabinet (Port Network)	Carrier (or Single-Carrier Cabinet)	Slot	Circuit

3. Connect a modular line cord from the designated information outlet to the attendant console.
4. Install auxiliary power for the attendant console; refer to *DEFINITY Communications System Generic 1 and Generic 3 Installation and Test*, 555-230-104, Issue 5, for detailed information.
5. Install labels per Attendant Console form and Display Module form assignments.
6. Install the handset bracket on either the left or right side of the console, as desired.
7. Insert the handset adapter on the same side of the handset bracket. A bracket is not required for a headset.

   NOTE:
   The handset adapter is available in two models: 854A-03 (black) or 854A-143 (burgundy).

8. Connect the handset cord to the jack on the same side of the console as the handset bracket.
9. See "9. Add Circuit Packs" on page 10-79 earlier in this chapter, and install a:
   - TN754 or TN413 Digital Line circuit pack for a 4-wire interface
   - TN2181 Digital Line circuit pack for a 2-wire interface

   in the assigned carrier slot (if an additional circuit pack is required).

Administration

1. Log in as ‘‘craft’’ at the `login:` prompt on the G3-MT or G3-MA.
2. See NOTE. Enter **`display system-parameters country-options`**, and press (RETURN) to verify that the system’s companding mode for its local stations is set to the desired value (usually, A-Law for Europe and Mu-Law for North America and Japan).

   NOTE:
   Refer to *DEFINITY Communications System Generic 3 V4 Implementation*, 555-230-655 for a description of these forms.

3. See NOTE. If necessary, for a 302B1 console in a G3 V3 system, enter **`change terminal-parameters 603/302B1`**, and press (RETURN) to change the default system-level parameters and audio levels for these terminals.

   NOTE:
   For detailed information about changing the default parameters and audio levels, refer to *DEFINITY Application Notes* available through the International Technical Assistance Center (ITAC).

4. Administer other forms listed under Attendant Console in *DEFINITY Communications System Generic 3 V4 Implementation*, 555-230-655.

52. Add 8400-Series Voice Terminals

Beginning with G3 V3, several 8400-series 2-wire/4-wire DCP terminals can be assigned to the system in native mode. Also, as a convenience during installations, administrative information can be downloaded from the system to nonvolatile memory in these terminals.

For systems before G3 V3, 8400-series DCP sets needed to be aliased as a 7400-series set, and administrative information could not be downloaded.

Requirements

A 4-wire 8400-series set is connected to the system in the same manner as any other 4-wire DCP voice terminal. A modular cable connects the set to an information outlet. From there, it connects through the cross-connect field and through a 25-pair cable to a 4-wire digital circuit pack such as the TN754 or TN413.

See NOTE. The tip and ring connections of 2-wire 8400-series sets are connected to a 16-port 2-wire TN2181 DCP circuit pack in a similar manner to the way that 2-wire analog endpoints are connected to a TN746B.

NOTE:
Unlike with some analog circuits, be careful to wire tip to tip and ring to ring between the circuit pack's port and the endpoint.

Hard-Wire Bridging

Analog-type hard-wire bridging has never been allowed for 4-wire (only) DCP endpoints such as 7400-series voice terminals. This is because, from the *outgoing* perspective of these endpoints, hard-wire bridging provides no way of combining the digital output of two bridged DCP sets. From the *incoming* perspective, a bridged endpoint causes enough additional load to degrade the fairly wide-spectrum DCP signal. (And, 2-wire DCP interfaces require twice the spectrum of 4-wire interfaces.)

See CAUTION. Likewise, hard-wire bridging is not allowed for 8400-series either sets with either 2-wire or 4-wire DCP interfaces to the system.

CAUTION:
Bridging or dual wiring of these endpoints can either cause:

- Electrical damage to the endpoints
- The system's circuit pack to remove power from the endpoints

Dual Wiring of 2-Wire and 4-Wire Endpoints

See previous CAUTION. A 2-wire and a 4-wire endpoint cannot be simultaneously wired to the same equipment location in a cross-connect field, even though they connect to differently colored wire pairs. The system uses separate circuit packs to interface 2- and 4-wire endpoints, and none of these circuit packs are capable of interfacing both.

Auxiliary Power

One of the 8400-series voice terminals, the 8434, derives power for its nonessential functions from an auxiliary power source.

The source of this power can be either:

- Individual MSP-1 power supplies or 258A-type adaptors, or
- Bulk power supplies such as the 1145A1

located at the cross-connect field, at an information outlet, or at the adaptor's site.

This voice terminal's maximum distance from its auxiliary power source is 250 feet.

Minimum Usable Vintage

For two of the 8400-series sets, administrative information cannot be downloaded to the sets through early vintages of the TN754(A) circuit pack. Therefore, when an 8410D or an 8434D voice terminal is installed as a 4-wire set connected to a TN754 circuit pack, the vintage of the TN754 circuit pack must be Vintage 11 or higher.

Administration

1. Log in as ‘‘craft’’ at the `login:` prompt on the G3-MT or G3-MA.
2. See NOTE. Enter **`display system-parameters country-options`**, and press (RETURN) to verify that the system’s companding mode for its local stations is set to the desired value (usually, A-law for Europe and Mu-law for North America and Japan).

   NOTE:
   Refer to *DEFINITY Communications System Generic 3 V4 Implementation*, 555-230-655 for a description of these forms.

3. See NOTE. If necessary, for 8400-series terminals in a G3 V3 system, enter **`change terminal-parameters 8400`**, and press (RETURN) to change the default system-level parameters and audio levels for these terminals.

   NOTE:
   For detailed information about changing the default parameters and audio levels, refer to *DEFINITY Application Notes* available through the International Technical Assistance Center (ITAC).

4. See NOTE. If necessary, for 8400-series terminals in a G3 V3 system, enter **`change display-messages softkey-labels`**, and press (RETURN) to assign user-defined soft-key labels for these terminals.

   NOTE:
   On a per-station basis in the ‘‘station’’ form, these soft keys can be labeled in several languages (including English, French, Spanish, and Italian). However, on a system-wide basis, this ‘‘display-messages soft-key’’ form can also label soft keys in another language or can change the predefined names of the soft-key labels.

5. Determine the port assignment of the endpoint’s 2-wire digital line from the ‘‘station’’ form.

EXAMPLE:	Port Number	2	A	04	06
		Cabinet (Port Network)	Carrier (or Single-Carrier Cabinet)	Slot	Circuit

6. Enter **`add station xxxxx`** `[[extension number] or` **`next`**`]`, and press (RETURN) to add the new 8400-series set to the system and to assign its attributes.

Installation

See "9. Add Circuit Packs" on page 10-79 earlier in this chapter, and install the:

- TN754 or TN413 circuit pack(s) for 8400-series installed as 4-wire sets
- TN2181 circuit pack(s) for 8400-series installed as 2-wire sets

in assigned carrier slot (if an additional circuit pack is required).

See NOTE. Detailed descriptions for installing wiring are contained in *DEFINITY Communications System Generic 1 and Generic 3 Installation and Test*, 555-230-104, Issue 5.

NOTE:
This manual gives separate wiring descriptions for 8400-series sets with 2-wire and 4-wire interfaces to the system.

Detailed descriptions for installing 8400-series voice terminals are contained in *8403, 8410, and 8434 Voice Terminal Instructions for Installation, Switch Administration, and Programming the Options*, 555-015-164.

53. Add CallMaster 603A, 603D, or 603E

Beginning with G3 V3, 603A and 603D CallMaster 4-wire DCP terminals can be assigned to the system in native mode. Also, beginning with G3 V3, 603E CallMaster 2-wire/4-wire DCP terminals can be assigned to the system in native mode. As a convenience during installations, administrative information can be downloaded from the system to nonvolatile memory in these terminals.

For systems before G3 V3, all of these CallMaster sets needed to be aliased as 602A CallMaster sets, and administrative information could not be downloaded.

Requirements

603E 2-wire CallMaster sets are connected to the system in the same manner as any other 2-wire DCP voice terminal. A modular cable connects the sets to an information outlet. From there, it connects through the cross-connect field and through a 25-pair cable to a TN2181 2-wire digital circuit pack.

603A, 603D, and 603E 4-wire CallMaster sets are connected to the system in the same manner as any other 4-wire DCP voice terminal. A modular cable connects the sets to an information outlet. From there, it connects through the cross-connect field and through a 25-pair cable to a 4-wire digital circuit pack such as the TN754 or TN413.

Hard-Wire Bridging

Analog-type hard-wire bridging has never been allowed for 4-wire DCP endpoints such as 7400-series voice terminals. This is because, from the *outgoing* perspective of these endpoints, hard-wire bridging provides no way of combining the digital output of two bridged DCP sets. From the *incoming* perspective, a bridged endpoint causes enough additional load to degrade the fairly wide-spectrum DCP signal. (And, 2-wire DCP interfaces require twice the spectrum of 4-wire interfaces.)

See CAUTION. Likewise, hard-wire bridging is not allowed for a 603A, 603D, or 603E CallMaster installed with either a 2- or 4-wire interface to the system.

CAUTION:
Bridging or dual wiring of these endpoints can either cause:

- *Electrical damage to the endpoints*
- *The system's circuit pack to remove power from the endpoints*

Dual Wiring of 2-Wire and 4-Wire Endpoints

See previous CAUTION. A 2-wire and a 4-wire endpoint cannot be simultaneously wired to the same equipment location in a cross-connect field, even though they connect to differently colored wire pairs. The system uses separate circuit packs to interface 2- and 4-wire endpoints, and none of these circuit packs are capable of interfacing both.

Administration

1. Log in as ''craft'' at the `login:` prompt on the G3-MT or G3-MA.
2. See NOTE. Enter **`display system-parameters country-options`**, and press (RETURN) to verify that the system's companding mode for its local stations is set to the desired value (usually, A-law for Europe and Mu-law for North America and Japan).

   NOTE:
   Refer to *DEFINITY Communications System Generic 3 V4 Implementation*, 555-230-655 for a description of these forms.

3. See NOTE. If necessary, for 603-series terminals in a G3 V3 system, enter **`change terminal-parameters 603/302B1`**, and press (RETURN) to change the default system-level parameters and audio levels for these terminals.

   NOTE:
   For detailed information about changing the default parameters and audio levels, refer to *DEFINITY Application Notes* available through the International Technical Assistance Center (ITAC).

4. Determine the port assignment of the endpoint's 4-wire digital line from the ''station'' form.

EXAMPLE:	Port Number	2	A	04	06
		Cabinet (Port Network)	Carrier (or Single-Carrier Cabinet)	Slot	Circuit

5. Enter **`add station xxxxx`** `[[extension number) or` **`next`**`]`, and press (RETURN) to add the new CallMaster set to the system and to assign its attributes.

Installation

See "9. Add Circuit Packs" on page 10-79 earlier in this chapter, and install the:

- TN754 or TN413 circuit pack(s) for 4-wire sets
- TN2181 circuit pack(s) for 2-wire sets

in assigned carrier slot (if an additional circuit pack is required).

See NOTE. Detailed descriptions for installing wiring are contained in *DEFINITY Communications System Generic 1 and Generic 3 Installation and Test*, 555-230-104, Issue 5.

NOTE:
This manual gives separate wiring descriptions for 2-wire and 4-wire 603E CallMaster sets.

54. Add TN1650B Memory Circuit Pack

Some larger G3r V3 systems require a third TN1650B Memory circuit pack in each PPN control carrier. This additional memory enables:

- System growth beyond 22 port networks
- Traffic throughput between port networks exceeding the capacity of two switch nodes.

CAUTION:
This memory-addition procedure assumes that the existing G3r system is already a G3r V3. Therefore, if a third TN1650B Memory circuit pack is being added in conjunction with a G3r V3 upgrade, do the upgrade first using the appropriate chapter of this manual. Then, return to this section to add the third memory pack.

NOTE:
Certain steps in this memory addition vary with the software load of the existing G3r V3 tape. For a G3r V3 tape beginning with load G3V3m.00.0.0.032 (or load 32, the ‘‘GA load’’), some extra steps are required

NOTE:
At least Version 4 of the TN1657 Disk Drive circuit pack is required in a system with three memory packs. Therefore, other steps in this memory addition vary with the version of the existing disk drive. Special steps apply to an existing V4 disk drive, whereas an existing pre-V4 disk drive must be replaced during the memory addition.

Service Interruption

Since, this memory addition requires a service interruption, notify the customer in advance as to when the addition will be carried out.

Verify System Status

Before proceeding, the system should be examined for alarms, and every problem should be corrected. The system must be alarm-free.

Standard-Reliability System

Save Translations

1. Login at the G3-MT or G3-MA terminal.
2. Enter **`save translation [spe-a] disk`**, and press (RETURN). This command instructs the system to write all translation information from memory to the disk.
3. If the PPN contains a TN750 Announcement circuit pack, enter **`display announcements`**, and press (RETURN).

   If administered recorded announcements are listed, enter **`list configuration software-version`**, press (RETURN). Check Page 2 of this form to find out when the announcements were last saved, and ask the customer whether any announcements have changed since then.

   If so, the current announcements can be saved using the save announcements command. Enter **`save announcements disk`**, and press (RETURN).
4. Enter **`backup disk [spe-a]`**, and press (RETURN). This command instructs the system to backup the current information on disk to the system tape.
5. Update backup tape, if required.
6. If the software load is 32 or higher, enter **`configure tape 3-mem`**, and press (RETURN). This command instructs the system to reconfigure the tape for a third TN1650B memory board. This command takes about 1 minute to execute.
7. If the software load is 32 or higher **and** if a Vintage 4 (or higher) TN1657 Disk Drive circuit pack currently resides in the system, enter **`restore disk full`**, and press (RETURN). This command instructs the system to copy the entire tape to disk. This command takes about 30 minutes to execute.

   NOTE:
   Until this command is finished, the system provides no user feedback on the G3-MT or G3-MA screen. Therefore, be careful not

to press (RETURN) once the command begins executing. Doing so will cause the G3-MT or G3-MA screen to clear as the command finishes — quickly erasing any success/failure messages that the system may provide.

Add the New Disk Drive

NOTE:
The steps under this heading should *only* be executed if the existing TN1657 disk drive is of Vintage 3 or less.

1. Enter **`busyout host-adaptor`**, and press (RETURN) to prevent other applications from trying to access the disk or tape.
2. See WARNING. Replace the existing TN1657 Disk Drive circuit pack in the control carrier with a TN1657 of Vintage 4 or higher (See Figure 10-73).

WARNING:
Before inserting or removing a circuit pack from a cabinet, put on a wrist strap and attach its plug or clip to the cabinet's frame.

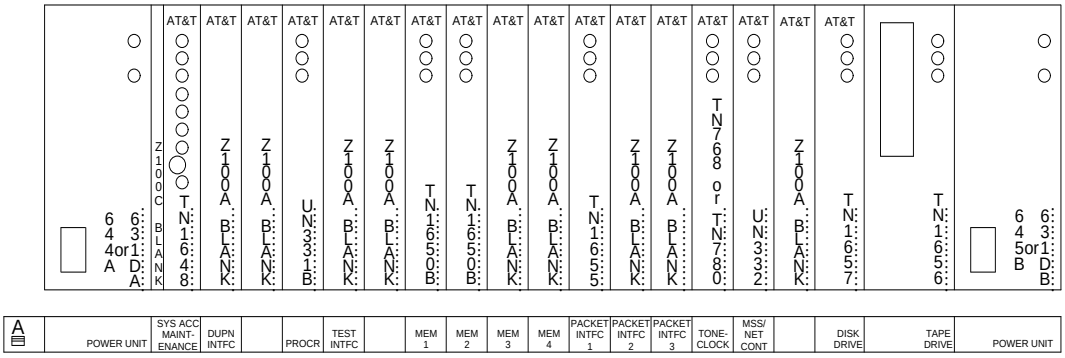

Figure 10-73. Circuit-Pack Locations in Standard-Reliability G3r Control Carrier

3. Enter **`reset host-adaptor`**, and press (RETURN) to allow the disk to "spin up."
4. Enter **`release host-adaptor`**, and press (RETURN) to release the disk from the maintenance-busyout condition and put it back into service.
5. See NOTE. Enter **`status spe`**, and press (RETURN) to verify that the disk is now in service.

NOTE:
If the disk fails to return to service, try again by repeating Steps 1, 3, 4, and 5.

6. Enter **`restore disk full`**, and press (RETURN). This command instructs the control carrier to copy the entire tape to disk. This command takes about 30 minutes to execute.

   NOTE:
   Until this command is finished, the system provides no user feedback on the G3-MT or G3-MA screen. Therefore, be careful not to press (RETURN) once the command begins executing. Doing so will cause the G3-MT or G3-MA screen to clear as the command finishes — quickly erasing any success/failure messages that the system may provide.

7. Enter **`test disk long`**, and press (RETURN) to test the new disk drive circuit pack.
8. Enter **`test stored-data`**, and press (RETURN) to verify that the files on every storage device are consistent.

Shut Down DEFINITY AUDIX System

1. See WARNING. If a DEFINITY AUDIX System resides in the PPN, shut down the AUDIX assembly and allow the disk to completely spin down.

   WARNING:
   Neglecting to shut down an AUDIX assembly before powering down the system cabinet where it resides can damage the AUDIX disk.

2. See WARNING. To avoid an unexpected AUDIX reboot after an unplanned switch reboot, unseat the AUDIX assembly from its backplane connectors.

   WARNING:
   Before inserting or removing a circuit pack from a cabinet, put on a wrist strap and attach its plug or clip to the cabinet's frame.

Power Down PPN

At the PPN, on the power-distribution unit, set the main circuit breaker to OFF.

Install Memory Circuit Pack

1. Remove the circuit-pack blank from the ‘‘MEM 3’’ slot of the control carrier (See Figure 10-73).
2. See WARNING. Install the new TN1650B Memory circuit pack into the ‘‘MEM 3’’ slot of the control carrier.

WARNING:
Before inserting or removing a circuit pack from a cabinet, put on a wrist strap and attach its plug or clip to the cabinet’s frame.

Reseat DEFINITY AUDIX System

See WARNING. If a DEFINITY AUDIX System resides in the PPN, reseat the AUDIX assembly to its backplane connectors.

WARNING:
Before inserting or removing a circuit pack from a cabinet, put on a wrist strap and attach its plug or clip to the cabinet’s frame.

Reboot the System

At the PPN, on the power-distribution unit, set the main circuit breaker to ON.

The system will boot from the TN1657 V4 disk drive. (A disk reboot takes 5 to 11 minutes.)

Restore Announcements

If the PPN contains a TN750 Announcement circuit pack, enter **`list configuration software-version`**, and press RETURN.

If Page 2 of this form shows that recorded announcements were saved, these announcements can be restored using the restore announcements command. Enter **`restore announcements [disk | tape]`**, and press RETURN.

Verify Success of Memory Board Addition

1. Enter **`list configuration control`**, and press RETURN to verify that the system recognizes the third TN1650B in the control carrier.
2. If the software load is 32 or higher, enter **`list configuration software-versions`**, and press RETURN to verify that the entry ‘‘3 mem’’ resides in the ‘‘file system’’ field on Page 2 of the form.
3. Enter **`test memory 3`**, and press RETURN to test the new memory circuit pack.

High- or Critical-Reliability System

Save Translations

1. Login at the G3-MT or G3-MA terminal.
2. Enter **`status spe`**, and press (RETURN) to verify that the standby SPE is refreshed and that the standby disk is now in service.
3. Enter **`save translation [both] disk`**, and press (RETURN). This command instructs the system to write all translation information from memory to the disks.
4. Enter **`backup disk [both]`**, and press (RETURN). This command instructs the system to backup the current information on the disks to the system tapes.
5. Update backup tapes if required.
6. If the software load is 32 or higher, enter **`configure tape spe-a 3-mem`**, and press (RETURN). This command instructs the system to reconfigure the tape in control carrier ''A'' for a third TN1650B memory board. This command takes about 1 minute to execute.
7. If the software load is 32 or higher, enter **`configure tape spe-b 3-mem`**, and press (RETURN). This command instructs the system to reconfigure the tape in control carrier ''B'' for a third TN1650B memory board. This command takes about 1 minute to execute.
8. If the software load is 32 or higher **and** if a Vintage 4 (or higher) TN1657 Disk Drive circuit pack currently resides in the system, enter **`restore disk full both`**, and press (RETURN). This command instructs the system to copy the entire tape to disk. This command takes about 30 minutes to execute.

   NOTE:
   Until this command is finished, the system provides no user feedback on the G3-MT or G3-MA screen. Therefore, be careful not to press (RETURN) once the command begins executing. Doing so will cause the G3-MT or G3-MA screen to clear as the command finishes — quickly erasing any success/failure messages that the system may provide.

Add the New Disk Drives

NOTE:
The steps under this heading should *only* be executed if the existing TN1657 disk drives are of Vintage 3 or less.

1. Enter **`status spe`**, and press RETURN to determine which SPE is active and which is standby.
2. After grounding yourself, lock the active SPE on line one SPE-select switch at a time.

   Do this by moving the switch on each UN330B Duplication Interface circuit pack (first in the *active* control carrier, then in the *standby*) to the designated position of the active control carrier.
3. Enter **`status port-network 1`**, and press RETURN to verify that the active Tone-Clock resides in the active control carrier.

   If not, repeat this step until the active Tone-Clock migrates to the active control carrier. If the migration takes longer than one minute, assume a Tone-Clock problem, and refer to *DEFINITY Communications System Generic 3r V4 Maintenance*, 555-230-105, Issue 4.
4. Power down the standby control carrier by disconnecting the power cords (first from the left one and then the right) from the power supplies on both sides of the carrier.
5. See WARNING. Replace the existing TN1657 Disk Drive circuit pack in the standby control carrier with a TN1657 of Vintage 4 or higher (See Figure 10-74).

   WARNING:
   Before inserting or removing a circuit pack from a cabinet, put on a wrist strap and attach its plug or clip to the cabinet's frame.

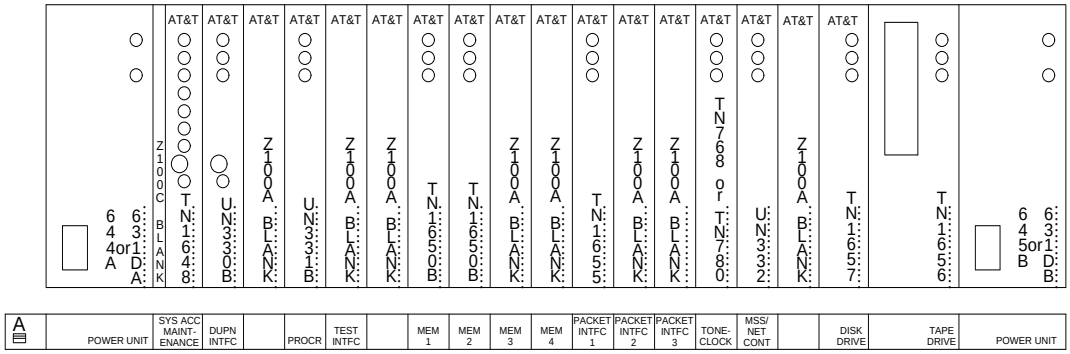

Figure 10-74. Circuit-Pack Locations in High- or Critical-Reliability G3r Control Carrier

6. Power up the standby control carrier by replacing the power cords (first to the right power supply and then the left).

   Restoring carrier power lights the red and green LEDs and invokes testing of circuit packs. After some activity, these LEDs will go out as the tests pass.

7. Verify that the standby SPE is up and cycling by watching for the yellow LED on the UN331B Processor circuit pack to flash with a regular cycle.

   If the yellow LED is not flashing after five minutes, prepare to execute the SPE-down interface tests by referring to *DEFINITY Communications System Generic 3r V4 Maintenance*, 555-230-105, Issue 4.

8. After grounding yourself, unlock both SPEs from their current ‘‘active/standby’’ role one SPE-select switch at a time.

   Do this by moving each switch (first in the *standby* control carrier, then in the *active*) to the AUTO position.

9. Enter **`status spe`**, and press RETURN to confirm that shadowing and handshake are up. This should occur within 2 minutes.

10. Enter **`restore disk standby full`**, and press RETURN. This command instructs the standby control carrier to copy the entire tape to disk. This command takes about 30 minutes to execute.

    NOTE:
    Until this command is finished, the system provides no user feedback on the G3-MT or G3-MA screen. Therefore, be careful not to press RETURN once the command begins executing. Doing so will cause the G3-MT or G3-MA screen to clear as the command finishes

— quickly erasing any success/failure messages that the system may provide.

11. Enter **`test disk a/b long`**, and press RETURN to test the new disk drive in the standby control carrier.
12. Enter **`reset system interchange`**, and press RETURN to reverse the ''active/standby'' roles of the two control carriers.
13. After grounding yourself, lock the newly active SPE on line one SPE-select switch at a time.

    Do this by moving the switch on each UN330B Duplication Interface circuit pack (first in the *active* control carrier, then in the *standby*) to the designated position of the newly active control carrier.
14. Repeat Steps 3 through 11 for the control carriers in their new roles.
15. Enter **`test stored-data`**, and press RETURN to verify that the files on every storage device are consistent.

Add the New Memory Circuit Packs

1. Enter **`status spe`**, and press RETURN to determine which SPE is active and which is standby.
2. After grounding yourself, lock the active SPE on line one SPE-select switch at a time.

   Do this by moving the switch on each UN330B Duplication Interface circuit pack (first in the *active* control carrier, then in the *standby*) to the designated position of the active control carrier.
3. Enter **`status port-network 1`**, and press RETURN to verify that the active Tone-Clock resides in the active control carrier.

   If not, repeat this step until the active Tone-Clock migrates to the active control carrier. If the migration takes longer than one minute, assume a Tone-Clock problem, and refer to *DEFINITY Communications System Generic 3r V4 Maintenance*, 555-230-105, Issue 4.
4. Power down the standby control carrier by disconnecting the power cords (first from the left one and then the right) from the power supplies on both sides of the carrier.
5. Remove the circuit-pack blank from the ''MEM 3'' slot of the standby control carrier (See Figure 10-3).
6. See WARNING. Install a new TN1650B Memory circuit pack into the ''MEM 3'' slot of the standby control carrier (See Figure 10-3).

WARNING:
Before inserting or removing a circuit pack from a cabinet, put on a wrist strap and attach its plug or clip to the cabinet's frame.

7. Power up the standby control carrier by replacing the power cords (first to the right power supply and then the left).

   Restoring carrier power lights the red and green LEDs and invokes testing of circuit packs. After some activity, these LEDs will go out as the tests pass.

8. Verify that the standby SPE is up and cycling by watching for the yellow LED on the UN331B Processor circuit pack to flash with a regular cycle.

   Also, verify that (after some possible activity) the red LED on the new TN1650 (signifying an on-board circuit-pack alarm) goes out and stays out.

   After five minutes, if the yellow LED is not flashing **or** if the red LED has not gone out, prepare to execute the SPE-down interface tests by referring to *DEFINITY Communications System Generic 3r V4 Maintenance*, 555-230-105, Issue 4.

9. See NOTES. After grounding yourself, reverse the ''active/standby'' roles of the two control carriers one SPE-select switch at a time.

   Do this by moving the switch on each UN330B Duplication Interface circuit pack (first in the *standby* control carrier, then in the *active*) to the designated position of the previously standby control carrier.

   NOTE:
   Using the SPE-select switches to reverse the ''active/standby'' roles of the two control carriers is not call preserving. (The resulting service outage is about 2 minutes.)

   NOTE:
   To minimize the service outage if the newly active control carrier fails to initialize (by entering the ''SPE down'' mode), return the two control carriers to their previous ''active/standby'' roles, and then take corrective action.

10. Repeat Steps 3 through 8 for the control carriers in their new roles.

11. After grounding yourself, unlock both SPEs from their current ''active/standby'' role one SPE-select switch at a time.

    Do this by moving each switch (first in the *standby* control carrier, then in the *active*) to the AUTO position.

12. Enter **`status spe`**, and press RETURN to confirm that both SPEs are refreshed and that shadowing and handshake are up. This should occur within 5 to 10 minutes.

Verify Success of Memory Board Addition

1. Enter **`list configuration control`**, and press RETURN to verify that the system recognizes the third TN1650B in both control carriers.
2. If the software load is 32 or higher, enter **`list configuration software-versions long`**, and press RETURN to verify that the entry ‘‘3 mem’’ resides in the ‘‘file system’’ field on Page 2 of the form.
3. Enter **`test memory 1a3`**, and press RETURN to test the new memory circuit pack in control carrier ‘‘A.’’
4. Enter **`test memory 1b3`**, and press RETURN to test the new memory circuit pack in control carrier ‘‘B.’’

55. Add Integrated CSU Module

For G3 V4, an integrated CSU module is composed of a wallet-sized 120A CSU module integrated with either a:

- TN767D DS1 circuit pack
- TN464E DS1/E1 circuit pack (optioned only for 24-channel DS1 service)

For G3 V3 to realize the enhanced DS1-maintenance capabilities provided by new maintenance software on the G3 V3 system and firmware on the updated DS1 circuit packs, the 120A CSU module must be paired with either a:

- TN767E DS1 circuit pack
- TN464F DS1/E1 circuit pack (optioned only for 24-channel DS1 service)

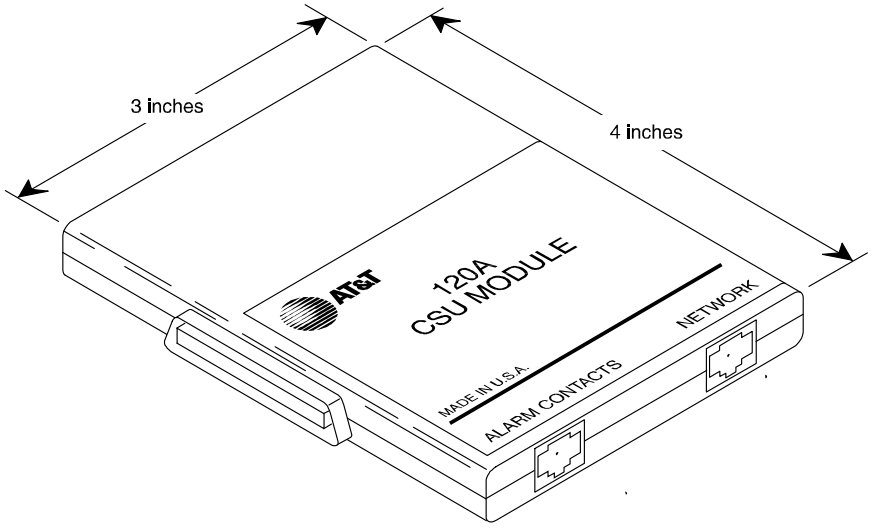

Figure 10-75. 120A CSU Module

Integrated CSUs present many advantages over traditional configurations using external CSUs. Some of these include:

- Simpler installation using fewer cables
- Automatic initialization and test of 120A by DS1
- Increased reliability with fewer parts (including a single processor on DS1 circuit pack)

- Lower power consumption without external power supplies
- Simpler maintenance, due to
  - Detection of on-line alarms by DS1
  - Convenient access to test jacks and LEDs on DS1 circuit pack
  - Ready access to DS1-associated performance counters using the G3-MT or G3-MA

Installation

For detailed information about installing an Integrated CSU Module refer to:

- *Integrated CSU Module Installation and Operation*, 555-230-193
- *DEFINITY Communications System Generic 1 and Generic 3 Installation and Test*, 555-230-104, Issue 5

56. Add PassageWay Solution Interface

The current version of the PassageWay™ Solution interface connects a:

- 4-wire Mu-law DCP voice terminal including:
  - — 7400-series terminals
  - — 602A, 603A, and 603D CallMaster terminals
- Personal computer (PC) with Microsoft[3] Windows[4] operating system version 3.1 (or later)

through a single 4-wire Mu-law DCP port to a DEFINITY system (See Figure 10-5).

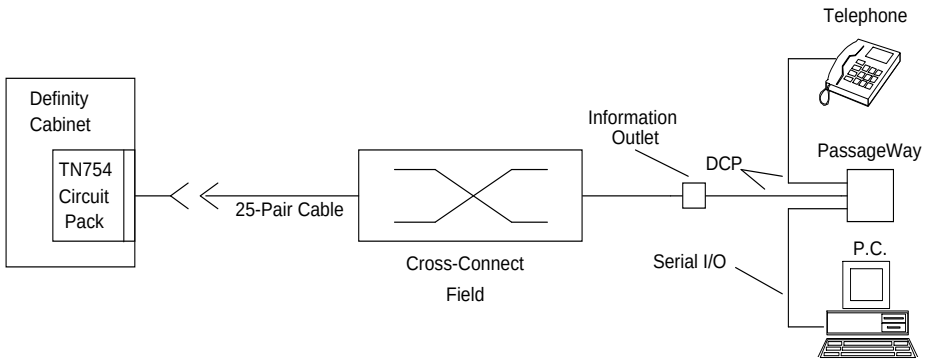

Figure 10-76. Typical System Interface for PassageWay Solution

The PassageWay Solution provides user applications including:

- AT&TBuzz
- AT&TCall
- AT&TConnect
- Log Viewer

and features such as:

- Autodialing using the Hayes[5] command set
- Dynamic Data Exchange linking PassageWay applications with other Windows applications

3. Registered trademark of the Microsoft Corporation.
4. Trademark of the Microsoft Corporation.
5. Registered trademark of the Hayes Corporation.

Interface Installation

Wiring

The PassageWay adaptor provides two standard 8-pin modular jacks, one for connection to the 4-wire Mu-law DCP terminal and the other for connection to a modular wall jack leading to the switch. This adaptor also provides a 9-pin RS-232 connection for the PC.

See NOTE. Figure 10-76 shows both the PC and voice terminal connected through the adaptor to a 4-wire Digital Line circuit pack (in this case a TN754).

NOTE:
In the current offering of the PassageWay Solution, a TN419B A-law Digital Line circuit pack cannot serve as the switch-side interface, and a TN754B must always be selected for Mu-law companding.

Auxiliary Power

The PassageWay adaptor derives its power from an auxiliary power source.

Since the PassageWay adaptor only draws about 1 1/4 Watts at 20 to 60 Volts (or in the worst case about 1/10 Ampere of current), the adaptor can either derive power:

- Individually, when the adjacent DCP voice terminal only uses phantom power

  This arrangement provides a wide maximum distance from the adaptor to its auxiliary-power source.

- In parallel, using the same power source as its adjacent DCP voice terminal requiring auxiliary power

  This arrangement only slightly decreases the DCP voice terminal's maximum distance from its auxiliary-power source.

The source of this power can be either:

- Individual MSP-1 power supplies or 258A-type adaptors, or
- Bulk power supplies such as the 1145A1

located at the cross-connect field, at an information outlet, or at the adaptor's site.

Switch Administration

1. Determine the port assignment of the PassageWay interface's 4-wire Mu-law digital line from the ''station'' form.

EXAMPLE:	Port Number	2	A	04	06
		Cabinet (Port Network)	Carrier (or Single-Carrier Cabinet)	Slot	Circuit

2. See NOTE. Enter **`add station xxxxx`** `[[extension number) or` **`next`**`]`, and press (RETURN) to add the PassageWay adaptor's adjacent 4-wire Mu-law DCP voice terminal to the system and to assign its attributes.

   If desired, an adjacent 7400-series voice terminal (without a display) can be aliased as a voice terminal with a display module. When this is done, the PassageWay Solution:

   - Simulates the display module — but not additional appearances or feature buttons
   - Provides the simulated module on the PC's screen

   NOTE:
   Be sure to assign the ''station'' form with the terminal type of adaptor's adjacent voice terminal or with a suitable alias. Do not use the ''PC'' terminal type as would be done with the PC/PBX Connection feature.

Installing the PassageWay Solution

For detailed information about installing the PassageWay software refer to *PassageWay Solution User's Guide*, 560-201-102.

57. Add Constellation Interface

Requirements

A Constellation interface provides advanced telemarketing features for up to 23 ACD agents by integrating several voice and data components into a single configuration. The primary purpose of this configuration is to automatically present an appropriate data screen with each incoming call to an ACD agent.

Constellation does this by passing D-channel information (for incoming ACD calls from an ISDN network) to an I channel in the Memorex-Telex cluster controller (Model 6544) which converts the information to an EIA format for access to a host computer. Then, the host computer accesses its database and relays a call-associated data screen back to the answering ACD agent's Memorex-Telex data terminal (Model 6538 or 6539). This data screen can then be presented to the agent as the incoming call arrives at the agent's 4-wire DCP voice terminal (See Figure 10-6).

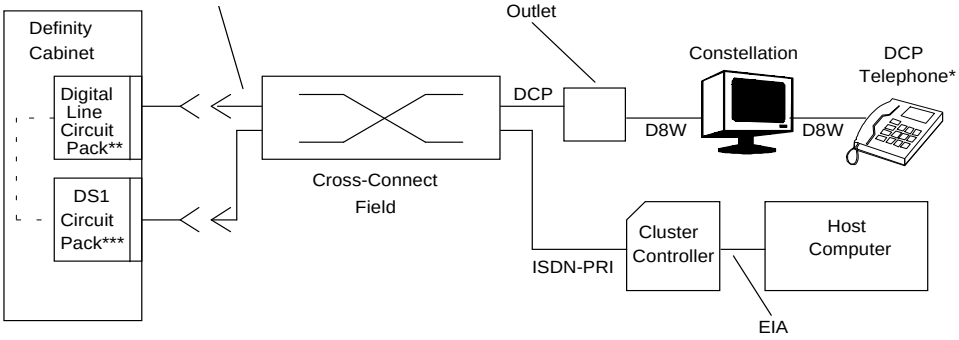

* Use with 7401D, 7406D, 602A1, 603A1, and 603D1 telephones

** Digital line pack can be a TN754 or TN413

*** DS1 circuit pack can be a TN464C or TN767C

Figure 10-77. Typical System Interface for Constellation

Installation

ISDN-PRI Interface to Cluster Controller

As shown in Figure 10-77, a North American 24-port DS1 (*not* a 32-port E1) interface connects the switch to a Model 6544 cluster controller. This allows each cluster-controller/host-computer combination to communicate with as many as 23 Constellation terminals.

For detailed information about installing an ISDN-PRI interface, refer to "34. Add ISDN—PRI" on page 10-143 of this chapter.

Cluster Controller

The Model 6544 cluster controller passes call-related information from an ISDN trunk group to applications databases on as many as three host computers. It also downloads a terminal configuration to a Constellation terminal.

For detailed information about installing the cluster controller, refer to the Memorex-Telex instructions that accompany the controller.

Constellation Terminals and DCP Voice Terminals

Model 6538 and 6539 Constellation terminals are connected between the switch and a 4-wire DCP voice terminal using two standard 8-pin modular jacks. These jacks reside on a plug-in card installed in the base of the terminal. (Use the “PHONE’’ jack to connect the Constellation terminal to the 4-wire DCP voice terminal, and use the ‘‘LINE’’ jack to connect the Constellation terminal to the information outlet.)

As shown in Figure 10-77, ACD agents served by a Constellation interface can use the following 4-wire DCP voice terminals: 7401D, 7406D, 602A1, 603A1, and 603D1. These voice terminals can be assigned as endpoints with either:

- Mu-law companding using a TN754
- A-law companding using a TN754B or TN413

Digital Line circuit pack.

For detailed information about installing a Constellation data terminal, refer to the Memorex-Telex instructions that accompany the terminal.

For detailed information about assigning a Constellation terminal to the switch, refer to the ‘‘Constellation Voice/Data Terminals’’ section of *DEFINITY Communications System Generic 3 V4 Implementation*, 555-230-655.

58. Add First Switch Node

Requirements

A directly connected G3r system can contain as many as three port networks (PNs), including the PPN. However, when either:

- A fourth port network (that is, a third EPN) is needed to provide increased capacity for the system
- Significant future growth is anticipated in a system with fewer than four port networks

a new switch node is normally added to the central location in a new multicarrier-cabinet (MCC) EPN containing:

- An expansion control carrier
- One switch node carrier (SNC) for a standard- or high-reliability system

  or

  Two switch node carriers for a critical-reliability system
- Up to three port carriers to accommodate the needed capacity

No Empty Carrier Position(s) at Central Location

An MCC EPN containing the switch node (SN) can be ordered for and installed at the central location.

There is no technical requirement dictating that the first (or any) switch node, comprised of SNC carrier(s), reside in the G3r system's MCC PPN. In fact, for a field addition of the first switch node, ordering a new EPN with configured SNC carriers is recommended for relative simplicity of:

- Installation (since the factory will configure and test the new EPN cabinet)
- Maintenance (since the SPE and the new switch node will reside in the same equipment room)

Empty Carrier Position(s) at Central Location

Sometimes, a centrally located MCC port network has no port carrier in carrier position ‘‘E” and, if necessary for critical reliability, position ‘‘D.’’ In this case, the SNC carrier(s) can be shipped loose and installed in these spare carrier positions.

Although, for new G3r systems, the practice of placing the first switch node in the PPN has attempted to provide consistency for manufacturing and for technicians in the field, adding this switch node is much simpler within a new MCC EPN. For an addition of the first switch node, placing the SNC carriers in the PPN is difficult and not recommended because:

- All of the new equipment must be shipped loose (instead of being configured and tested as a complete cabinet by the factory).
- Port carrier(s) may have to be moved from the MCC PPN to a new centrally located MCC EPN.
- The lines and trunks in these port carrier(s) must be relabeled, rewired, and retranslated.
- SNC carrier(s) must fill the empty carrier positions left by the port carrier(s) moved from the PPN.
- A new port carrier may have to be added to the new MCC EPN.

Increased Capacity at Remote Location

At other times, the new switch node is being added to provide increased port capacity for a remote location. To provide this remote port capacity, either:

- Either an MCC or an SCC EPN can be ordered for and installed at the remote location. Also, using one of the above methods, the switch node can be ordered for and installed at the central location.

  For simpler system maintenance, this is the preferred practice to provide remote capacity. In this way, a technician can maintain the PPN and the switch node as collocated units.

- An MCC EPN containing the switch node can be ordered and installed for the fiber-remoted location.

  Since a DS1C-remoted connection does not provide sufficient bandwidth for the SNC, this new switch node can *only* reside in a *fiber*-remoted EPN. As a result, a remote switch node is subject to the normal distance limitations of fiber-remoted EPNs.

Engineering Specifications

The ATTOMS configurator does not automatically configure an addition of the first switch node for a G3r system. Therefore, an E-1154 form *must* be completed and sent to the Design Center so that an engineer can manually configure and can issue engineering specifications for the addition.

An accurate floor plan must also be included with the E-1154 form so that the Design Center can verify that the equipment room has enough physical space for the new MCC EPN.

Presale Site Inspection

At a presale site inspection, the directly connected system's existing fibers must be checked for possible reuse with switch-node connectivity. During this inspection, coordinate with the Design Center engineer to determine whether any of the existing fibers are both accessible and long enough to accommodate switch-node connections with the planned cabinet layout.

Traffic Considerations

The switch fabric of a G3r system with one switch node (like a directly connected system) is totally nonblocking.[6] However, like directly connected systems, switch-connected systems must be engineered to account for expected traffic levels on each port network's TDM/LAN bus, a truer limiting factor in PBX traffic.

Normally, from the perspective of traffic between port networks, the second switch node should not be added until the G3r system grows beyond 16 port networks. However, a second switch node may be added in advance to prepare for future system growth.

Service Interruption

Since this switch-node addition requires a complete service interruption, coordinate with the customer in advance as to when the addition will be carried out.

Verify System Status

Before proceeding, the system should be examined for alarms, and every problem should be corrected. The system must be alarm-free.

6. Neglecting the possible existence of bandwidth-limiting (and therefore, traffic limiting)

Save Translations

1. Log in at the G3-MT terminal.
2. If the system is high- or critical-reliability, enter **`status spe`**, and press (RETURN) to verify that the standby SPE is refreshed and that the standby disk is in service.
3. Enter **`save translation [spe-a or both] disk`**, and press (RETURN). This command instructs the system to take all translation information in memory and write it to the disk(s).
4. If the MCC port network (that will be powered down to install an SNC carrier) contains a TN750 Announcement circuit pack, enter **`display announcements`**, and press (RETURN).

   If administered recorded announcements are listed, enter **`list configuration software-version`**, press (RETURN). Check Page 2 of this form to find out when the announcements were last saved, and ask the customer whether any announcements have changed since then.

   If so, the current announcements can be saved using the save announcements command. Enter **`save announcements disk`**, and press (RETURN).
5. Enter **`backup disk [spe-a or both]`** and press (RETURN). This command instructs the system to backup the current information on disk to the system tape(s).
6. Update backup tape(s), if required.

Standard-Reliability System

Prerequisite Hardware

The equipment in the following table *must* be on-site before the switch-node addition begins.

Table 10-13. Required Hardware

PEC	Equipment	Description	Quantity
6350x		MCC Expansion Port Network	1 (Note 1)
63310	J58890SA	Switch Node Carrier	1
63335	103281788	TN570 Expansion Interface	1 per PN (Note 2)
63322	103281804	TN572 Switch Node Clock	1 (Note 3)
63336	103281812	TN573 Switch Node Interface	1 per PN
63300A	FL2P-P-xx	Fiber Cable	1 per EPN (Note 4)
	H600-278 G2	EI-to-SNI Metallic Cable	1
63297	106455348	9823-A Lightwave Transceiver	2 per EPN (Note 5)
or			
63304	106455363	9823-B Lightwave Transceiver	2 per EPN (Note 5)

(See notes on the next page)

NOTE:

1. Recommended, but not required if an empty carrier position resides in position ‘‘E” of a centrally located MCC port network.
2. A directly connected system with 3 port networks uses 6 EIs. Whereas, a switch-connected system with 4 port networks uses 4. Therefore, these EIs may be reused from the existing directly connected system. However, if required for extra capacity, additional TN570 EIs (ordered separately) are also shipped with the EPN equipment.
3. For a standard-reliability system, the clock resides in slot ‘‘10’’ of the SNC carrier.

   The factory includes this clock with the PEC for the SNC carrier.
4. After coordinating with Design Center engineer, fibers that are accessible and long enough may be reused from the existing directly connected system.
5. One pair for each fiber connection. For each connection, one 9823-type is installed in the SNC’s PN, and a like transceiver in another PN.

   A directly connected system with 3 port networks and a switch-connected system with 4 port networks both use 6 transceivers. Therefore, these transceivers may be reused from the existing directly connected system. However, if more than one EPN is ordered for extra capacity, additional 9823-type transceivers (ordered separately) are also shipped with the EPN equipment.

   The distance limit of 9823-A transceivers is 4900 feet and 9823-B transceivers is 25,000 feet.

Remove Fiber Connections from System

1. For each fiber link, enter **`busyout fiber-link`** ***`fiber #`***, and press (RETURN) to busy out each fiber link in the system.
2. For each fiber link, enter **`remove fiber-link`** ***`fiber #`***, and press (RETURN) to remove each fiber link from system translations.
3. Enter **`change circuit pack`**, and press (RETURN) to remove TN570 EI circuit packs from system translations.
4. Completely remove the existing fiber connections from the directly connected system (See following figures).

   Save the removed TN570 EI circuit packs, 9823-type transceivers, and FL2P-P-xx fiber cables. Some of these will be reused.

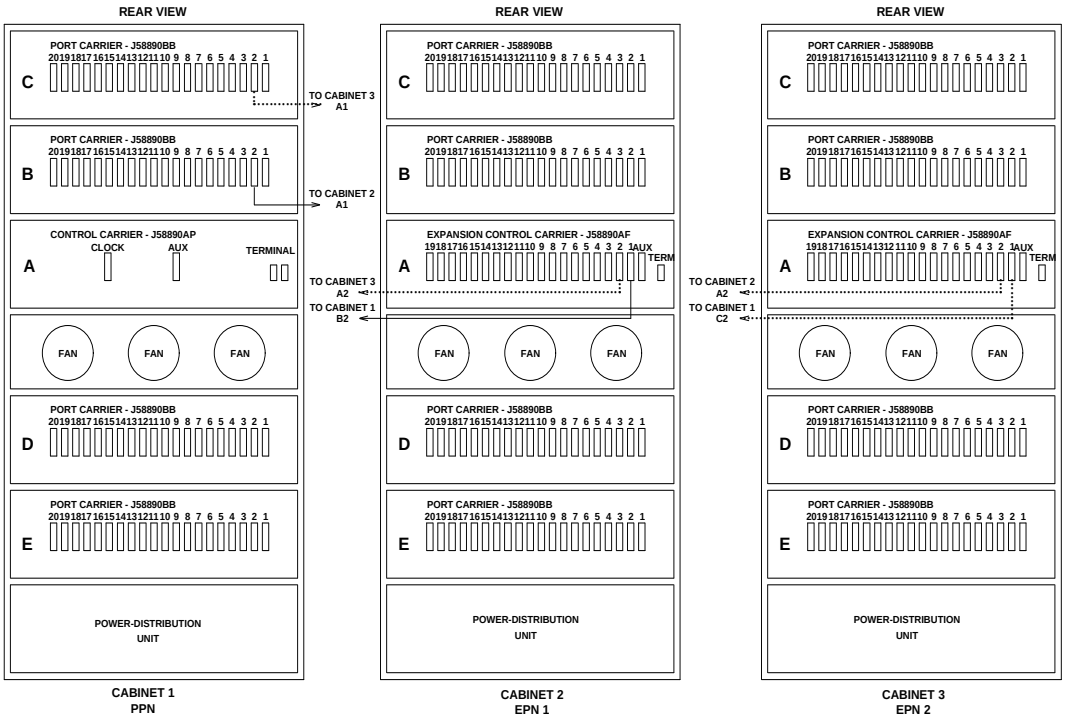

Figure 10-78. Directly Connected Standard-Reliability G3r with Two MCC EPNs

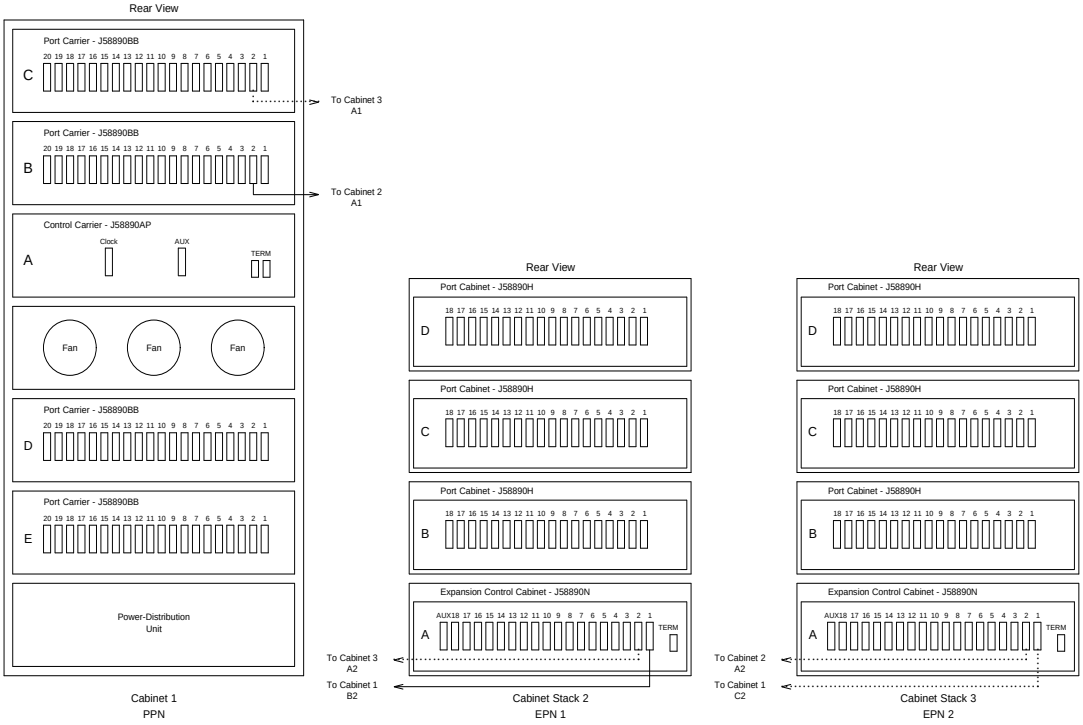

Figure 10-79. Directly Connected Standard-Reliability G3r with Two SCC EPNs

Shut Down DEFINITY AUDIX and Install New SNC Carrier

NOTE:
This section need not be executed if the new SNC carrier was shipped configured in a new MCC EPN.

1. See WARNING. If a DEFINITY AUDIX System resides in the MCC port network where the SNC carrier will be installed, shut down the AUDIX assembly and allow the disk to completely spin down.

   WARNING:
   Neglecting to shut down an AUDIX assembly before powering down the system cabinet where it resides can damage the AUDIX disk.

2. See WARNING. Unseat the AUDIX assembly from its backplane connectors.

   WARNING:
   Before inserting or removing a circuit pack from a cabinet, put on a wrist strap and attach its plug or clip to the cabinet's frame.

3. Power down the MCC port network where the new SNC carrier will reside.
4. Refer to the following portions of "7. Add Switched Node Carrier" on page 10-50 earlier in this chapter:
   - Prepare New Switch Node Carrier
   - Install New Switch Node Carrier
   - Install Circuit Packs

   (See Figure 10-80 for typical circuit-pack locations in the new carrier.)
5. See WARNING. If a DEFINITY AUDIX System resides in the port network where the new SNC carrier was installed, reseat the AUDIX assembly to its backplane connectors.

   WARNING:
   Before inserting or removing a circuit pack from a cabinet, put on a wrist strap and attach its plug or clip to the cabinet's frame.

6. Power up the MCC port network where the new SNC carrier was installed.

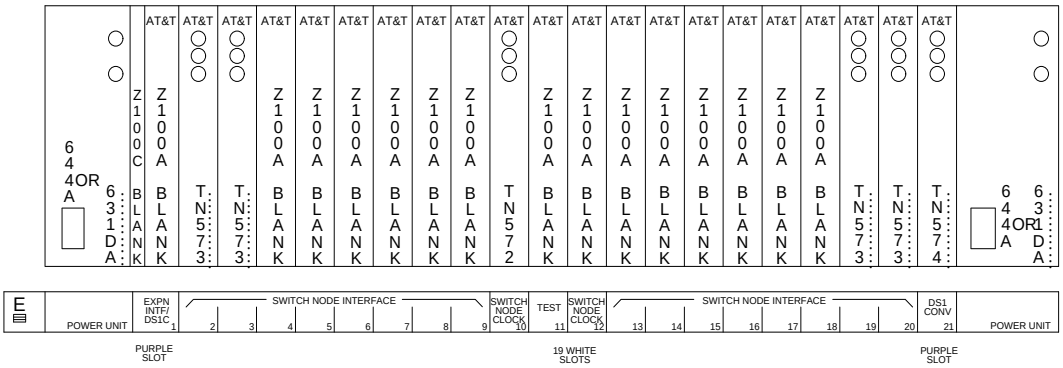

Figure 10-80. Typical Switch Node Carrier for Standard-Reliability G3r with Four PNs

Install New MCC Expansion Port Network

NOTE:
This section may not need to be executed if a new SNC carrier was installed in a spare position of an MCC port network.

Refer to ‘‘Install Multicarrier Cabinet Expansion Port Network’’ in *DEFINITY Communications System Generic 1 and Generic 3 Installation and Test*, 555-230-104, Issue 5, for instructions on installing the EPN.

Translate SNC Carrier

Refer to the ‘‘SNI Administration and SNI Board Insertion’’ section of *DEFINITY Communications System Generic 3r Maintenance*, 555-230-105, for information about translating the new SNC carrier.

Add Fiber Connections to System

1. See NOTE. Add the new fiber connections to completely reconnect the port networks as a switch-connected system (See following figures).

   Reuse the removed TN570 EI circuit packs and 9823-type transceivers. Also, reuse any usable FL2P-P-xx fiber cables.

   NOTE:
   For detailed information about installing fiber connections refer to *DEFINITY Communications System Generic 1 and Generic 3 Installation and Test*, 555-230-104, Issue 5.

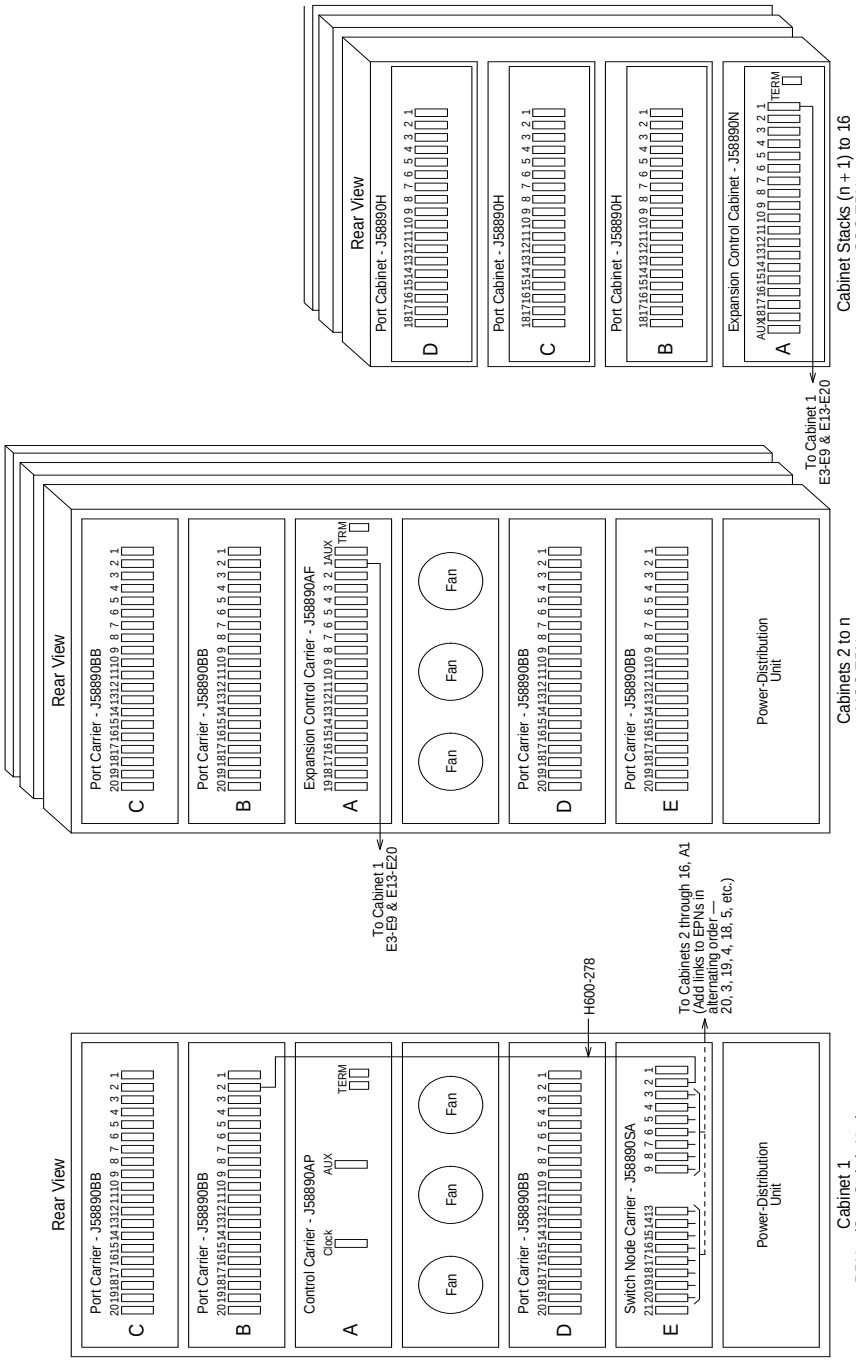

Figure 10-81. Switch-Connected Standard-Reliability G3r with SNC in PPN

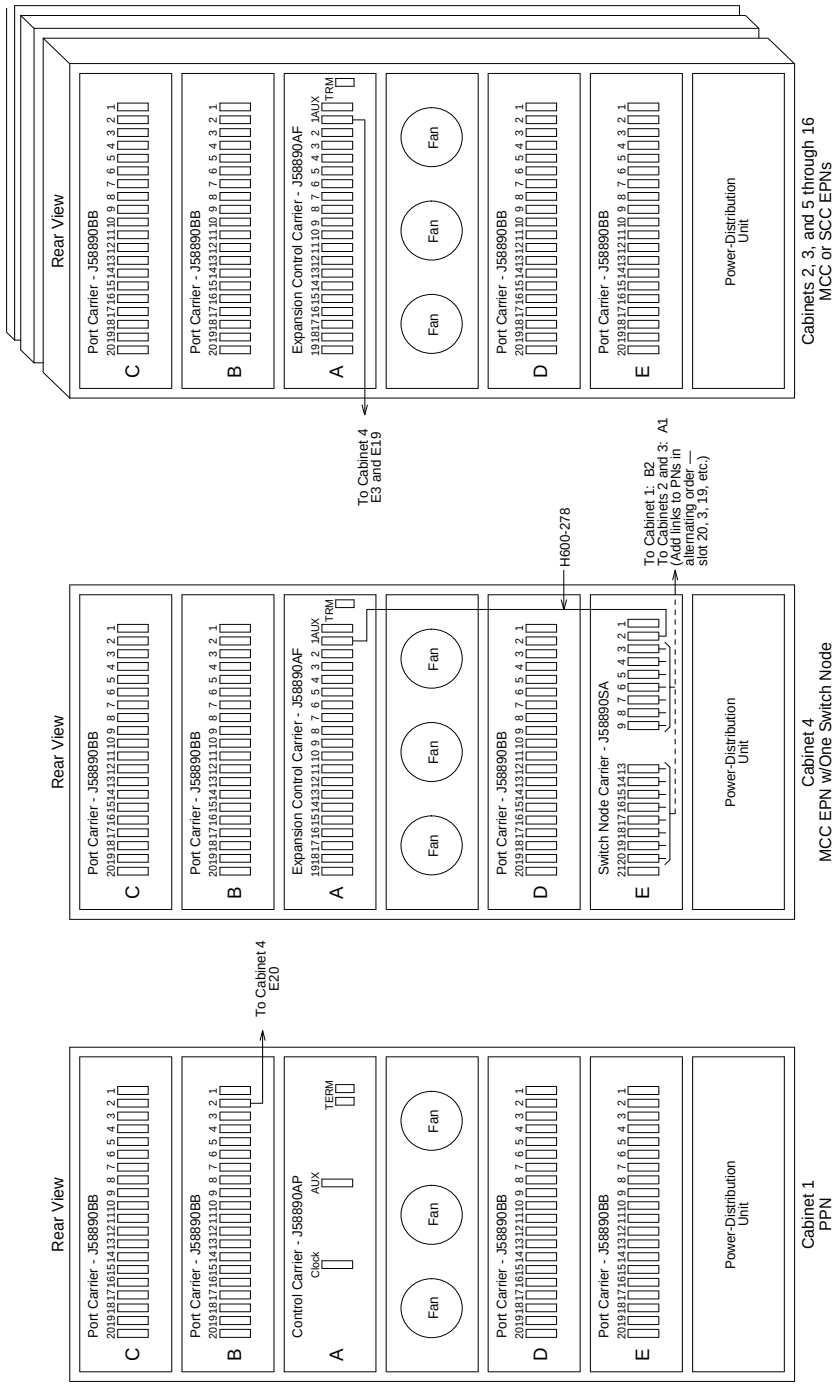

Figure 10-82. Switch-Connected Standard-Reliability G3r with SNC in EPN

Translate New Fiber Connections

Refer to the "Fiber Link Administration" section of *DEFINITY Communications System Generic 3 V4 Implementation*, 555-230-655 for information to translate the new fiber connections.

Save Translations

1. Enter **`save translation [spe-a] disk`**, and press (RETURN). This command instructs the system to take all translation information in memory and write it to the disk.
2. If a TN750 Announcement circuit pack resides in an MCC port network that was powered down to install an SNC carrier, enter **`list configuration software-version`**, and press (RETURN).

   If Page 2 of this form shows that recorded announcements were saved, these announcements can be restored using the restore announcements command. Enter **`restore announcements [disk | tape]`**, and press (RETURN).
3. Enter **`backup disk [spe-a]`** and press (RETURN). This command instructs the system to backup the current information on disk to the system tape.
4. Update backup tape, if required.

Run Acceptance Tests

Refer to Chapter 11 of *DEFINITY Communications System Generic 1 and Generic 3 Installation and Test*, 555-230-104, Issue 5, and perform the appropriate tests.

Removed Equipment

According to pricing conventions for a switch-node addition, any unused fibers and TN570 Expansion Interface circuit packs belong to the customer.

If the customer decides not to keep unused fibers or EIs for possible reuse with a new EPN, then this equipment should be returned to AT&T. Also, any extra H600-278 metallic cables shipped loose with an SNC carrier should be returned to AT&T. The equipment should be returned according to the requirements outlined in:

BCS/Material Logistics, MSL/Attended Stocking Locations
Methods and Procedures for Basic Material Returns

High-Reliability System

Prerequisite Hardware

The equipment in the following table *must* be on-site before the switch-node addition begins..

Table 10-14. Required Hardware

PEC	Equipment	Description	Quantity
6350x		MCC Expansion Port Network	1 (Note 1)
63310	J58890SA	Switch Node Carrier	1
63335	103281788	TN570 Expansion Interface	2 for PPN (Note 2) plus 1 per EPN
63322	103281804	TN572 Switch Node Clock	2 (Note 3)
63336	103281812	TN573 Switch Node Interface	2 for PPN plus 1 per EPN
63300A	FL2P-P-xx	Fiber Cable	SN in PPN: 1 per EPN (Note 4) SN in EPN: 1 per PN
	H600-278 G2	EI-to-SNI Metallic Cable	SN in PPN: 2 SN in EPN: 1
63297 or 63304	106455348 106455363	9823-A Lightwave Transceiver 9823-B Lightwave Transceiver	2 per Fiber (Note 5) 2 per Fiber (Note 5)

(See notes on the next page)

NOTE:

1. Recommended, but not required if an empty carrier position resides in position ‘‘E’’ of a centrally located MCC port network.
2. A directly connected system with 3 port networks uses 6 EIs. Whereas, a switch-connected system with 4 port networks uses 5. Therefore, these EIs may be reused from the existing directly connected system. However, if required for extra capacity, additional TN570 EIs (ordered separately) are also shipped with the EPN equipment.
3. For a high-reliability system, the clocks reside in slots ‘‘10’’ and ‘‘12’’ of the SNC carrier.
4. The factory includes one of the clocks with the PEC for the SNC carrier. The other must be ordered separately with its own PEC.
5. After coordinating with Design Center engineer, fibers that are accessible and long enough may be reused from the existing directly connected system.
6. One pair for each fiber connection. For each connection, one 9823-type is installed in the SNC’s PN, and a like transceiver in another PN.

   A directly connected system with 3 port networks uses 6 transceivers. Whereas, a switch-connected system with 4 port networks and the switch node in the:

   - PPN uses 6
   - EPN uses 8

   transceivers. Therefore, the first 6 transceivers may be reused from the existing directly connected system. However, if the switch node will reside in an MCC EPN or if more than one EPN is ordered for extra capacity, additional 9823-type transceivers (ordered separately) are also shipped with the EPN equipment.

   The distance limit of 9823-A transceivers is 4900 feet and 9823-B transceivers is 25,000 feet.

Remove Fiber Connections from System

1. For each fiber link, enter **`busyout fiber-link`** ***`fiber #`***, and press (RETURN) to busy out each fiber link in the system.
2. For each fiber link, enter **`remove fiber-link`** ***`fiber #`***, and press (RETURN) to remove each fiber link from system translations.
3. Enter **`change circuit pack`**, and press (RETURN) to remove TN570 EI circuit packs from system translations.
4. Completely remove the existing fiber connections from the directly connected system (See following figures).

   Save the removed TN570 EI circuit packs, 9823-type transceivers, and FL2P-P-xx fiber cables. Some of these will be reused.

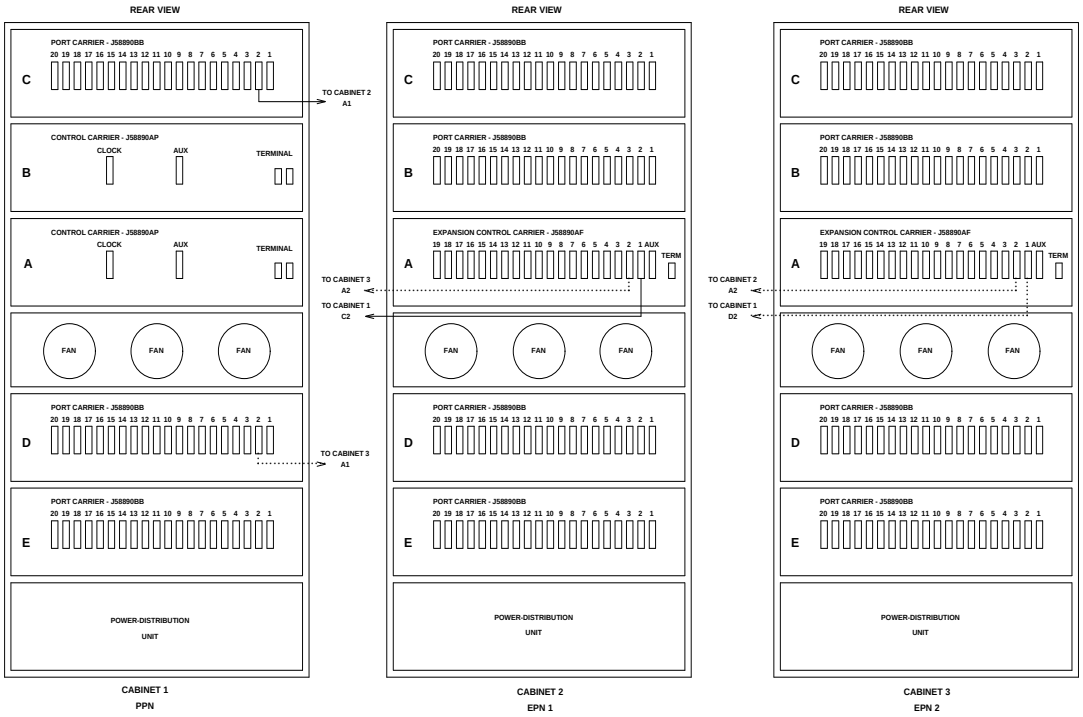

Figure 10-83. Directly Connected High-Reliability G3r with Two MCC EPNs

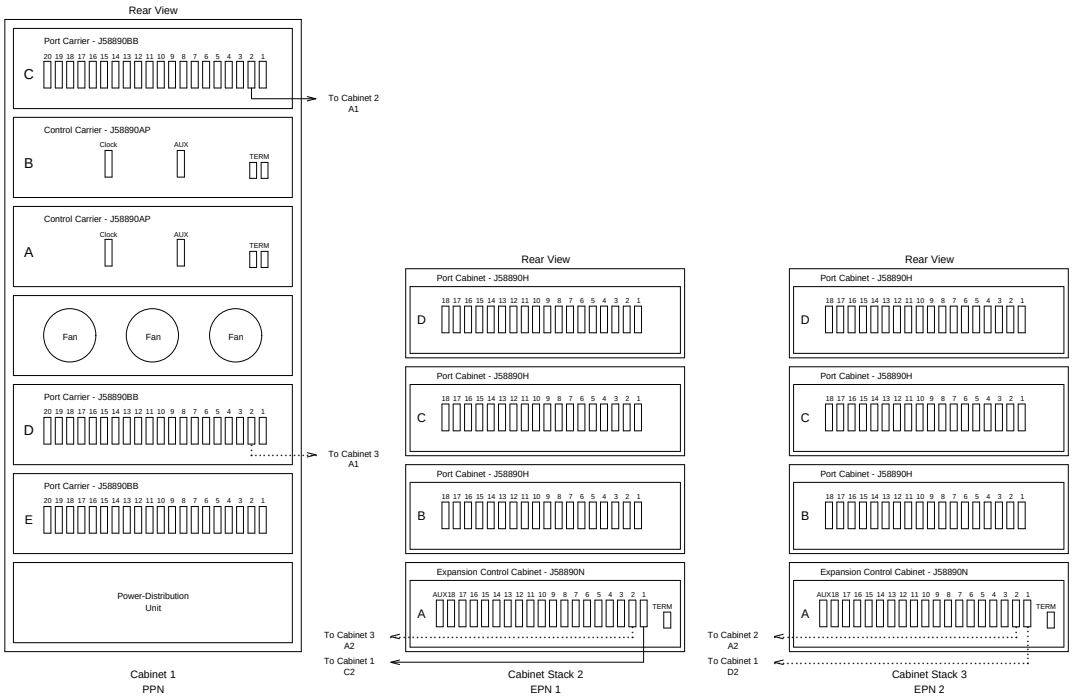

Figure 10-84. Directly Connected High-Reliability G3r with Two SCC EPNs

Shut Down DEFINITY AUDIX and Install New SNC Carrier

NOTE:
This section need not be executed if the new SNC carrier was shipped configured in a new MCC EPN.

1. See WARNING. If a DEFINITY AUDIX System resides in the MCC port network where the SNC carrier will be installed, shut down the AUDIX assembly and allow the disk to completely spin down.

   WARNING:
   Neglecting to shut down an AUDIX assembly before powering down the system cabinet where it resides can damage the AUDIX disk.

2. See WARNING. Unseat the AUDIX assembly from its backplane connectors.

   WARNING:
   Before inserting or removing a circuit pack from a cabinet, put on a wrist strap and attach its plug or clip to the cabinet's frame.

3. Power down the MCC port network where the new SNC carrier will reside.
4. See NOTE. Refer to the following portions of "7. Add Switched Node Carrier" on page 10-50:
   - Prepare New Switch Node Carrier
   - Install New Switch Node Carrier
   - Install Circuit Packs

   (See Figure 10-85 for typical circuit-pack locations in the new carrier.)

   NOTE:
   The right and left sides of an SNC carrier are powered separately. Therefore, when installing the two TN573 SNIs that connect to the TN570 EIs in the PPN, be sure to place these TN573s in opposite sides of the carrier. In this way, communication to the SPE will still exist if one side of the SNC carrier loses power.

5. See WARNING. If a DEFINITY AUDIX System resides in the port network where the new SNC carrier was installed, reseat the AUDIX assembly to its backplane connectors.

   WARNING:
   Before inserting or removing a circuit pack from a cabinet, put on a wrist strap and attach its plug or clip to the cabinet's frame.

6. Power up the MCC port network where the new SNC carrier was installed.

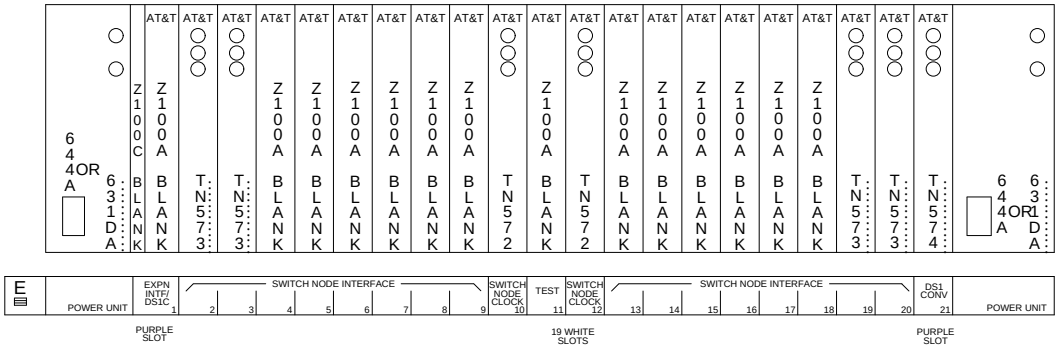

Figure 10-85. Typical Switch Node Carrier for High-Reliability G3r with Four PNs

Install New MCC Expansion Port Network

NOTE:
This section may not need to be executed if a new SNC carrier was installed in a spare position of an MCC port network.

Refer to ‘‘Install Multicarrier Cabinet Expansion Port Network’’ in *DEFINITY Communications System Generic 1 and Generic 3 Installation and Test*, 555-230-104, Issue 5, for instructions on installing the EPN.

Translate SNC Carrier

Refer to the ‘‘SNI Administration and SNI Board Insertion’’ section of *DEFINITY Communications System Generic 3r Maintenance*, 555-230-105, for information about translating the new SNC carrier.

Add Fiber Connections to System

1. See NOTE. Add the new fiber connections to completely reconnect the port networks as a switch-connected system (See following figures).

   Reuse the removed TN570 EI circuit packs and 9823-type transceivers. Also, reuse any usable FL2P-P-xx fiber cables.

   NOTE:
   For detailed information about installing fiber connections refer to *DEFINITY Communications System Generic 1 and Generic 3 Installation and Test*, 555-230-104, Issue 5.

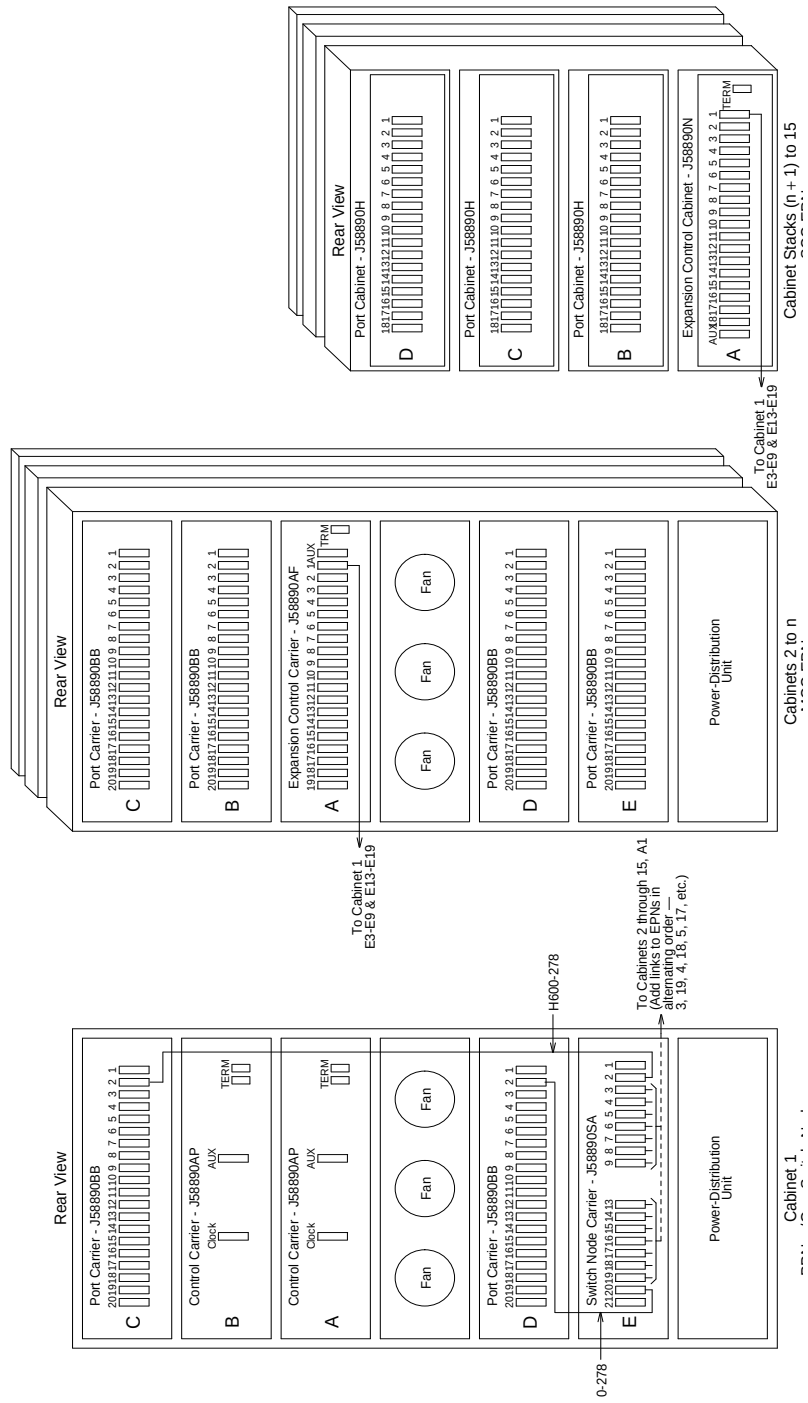

Figure 10-86. Switch-Connected High-Reliability G3r with SNC in PPN

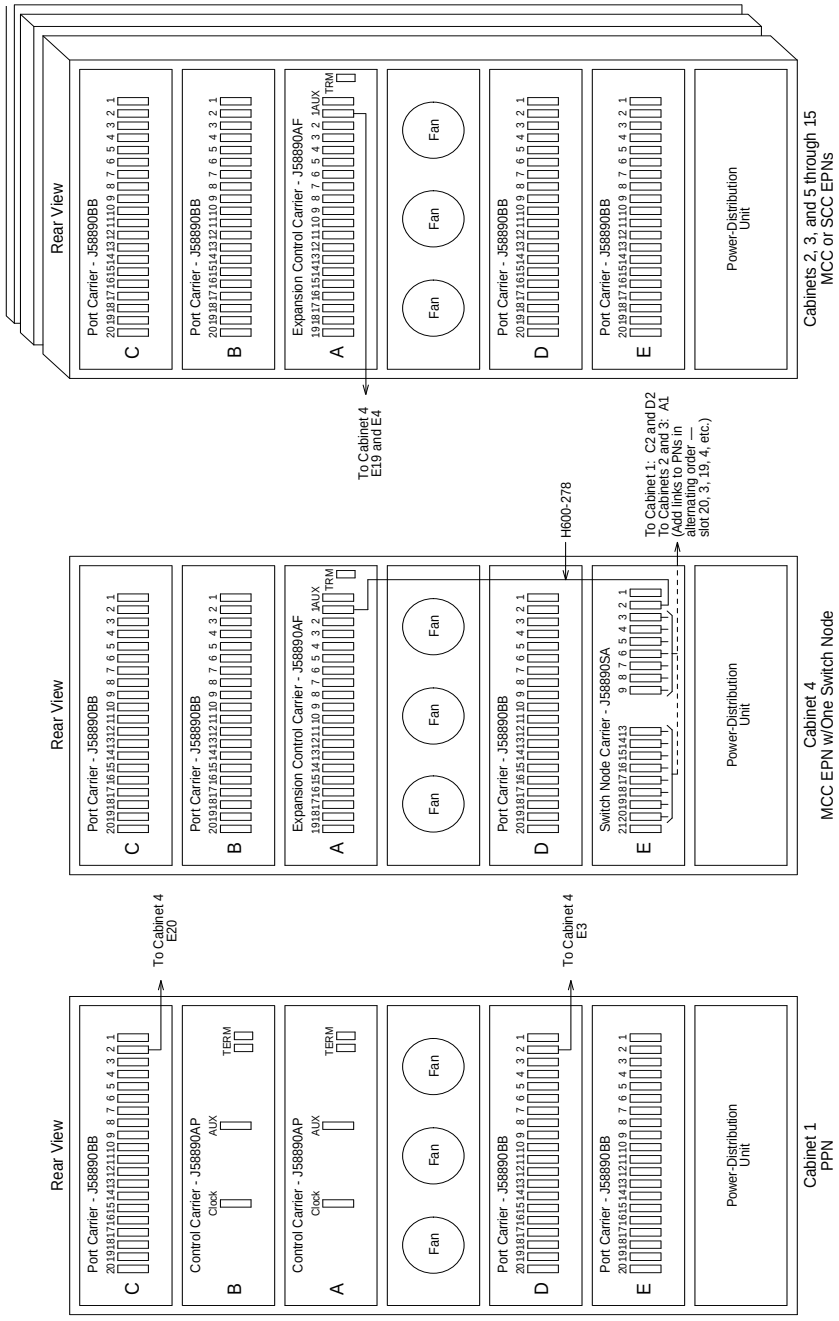

Figure 10-87. Switch-Connected High-Reliability G3r with SNC in EPN

Translate New Fiber Connections

Refer to the ''Fiber Link Administration'' section of *DEFINITY Communications System Generic 3 V4 Implementation*, 555-230-655 for information to translate the new fiber connections.

Save Translations

1. Enter **`status spe`**, and press (RETURN) to verify that the standby SPE is refreshed and that the standby disk is in service.
2. Enter **`save translation [both] disk`**, and press (RETURN). This command instructs the system to take all translation information in memory and write it to the disks.
3. If a TN750 Announcement circuit pack resides in an MCC port network that was powered down to install SNC carriers, enter **`list configuration software-version`**, and press (RETURN).

   If Page 2 of this form shows that recorded announcements were saved, these announcements can be restored using the restore announcements command. Enter **`restore announcements [disk | tape]`**, and press (RETURN).
4. Enter **`backup disk [both]`** and press (RETURN). This command instructs the system to backup the current information on disk to the system tapes.
5. Update backup tapes, if required.

Run Acceptance Tests

Refer to Chapter 11 of *DEFINITY Communications System Generic 1 and Generic 3 Installation and Test*, 555-230-104, Issue 5, and perform the appropriate tests.

Removed Equipment

According to pricing conventions for a switch-node addition, any unused fibers and TN570 Expansion Interface circuit packs belong to the customer.

If the customer decides not to keep unused fibers or EIs for possible reuse with a new EPN, then this equipment should be returned to AT&T. Also, any extra H600-278 metallic cables shipped loose with an SNC carrier should be returned to AT&T. The equipment should be returned according to the requirements outlined in:

BCS/Material Logistics, MSL/Attended Stocking Locations
Methods and Procedures for Basic Material Returns

Critical-Reliability System

Prerequisite Hardware

The equipment in the following table *must* be on-site before the switch-node addition begins..

Table 10-15. Required Hardware

PEC	Equipment	Description	Quantity
6350x		MCC Expansion Port Network	1 (Note 1)
63310	J58890SA	Switch Node Carrier	2
63335	103281788	TN570 Expansion Interface	2 per PN (Note 2)
63322	103281804	TN572 Switch Node Clock	2 (Note 3)
63336	103281812	TN573 Switch Node Interface	2 per PN
63300A	FL2P-P-xx	Fiber Cable	2 per EPN (Note 4)
	SN in PPN: H600-278 G1	EI-to-SNI Metallic Cable	2
	or		
	SN in EPN: H600-278 G2	EI-to-SNI Metallic Cable	2
63297	106455348	9823-A Lightwave Transceiver	2 per Fiber (Note 5)
or			
63304	106455363	9823-B Lightwave Transceiver	2 per Fiber (Note 5)

(See notes on the next page)

NOTE:

1. Recommended, but not required if an empty carrier position resides in positions ‘‘D’’ and ‘‘E’’ of a centrally located MCC port network.
2. A directly connected system with 3 port networks uses 12 EIs. Whereas, a switch-connected system with 4 port networks uses 8. Therefore, these EIs may be reused from the existing directly connected system. However, if required for extra capacity, additional TN570 EIs (ordered separately) are also shipped with the EPN equipment.
3. For a critical-reliability system, one clock resides in slot ‘‘10’’ of each SNC carrier.
4. The factory includes each clock with the PEC for each SNC carrier.
5. After coordinating with Design Center engineer, fibers that are accessible and long enough may be reused from the existing directly connected system.
6. One pair for each fiber connection. For each connection, one 9823-type is installed in the SNC’s PN, and a like transceiver in another PN.

   A directly connected system with 3 port networks and a switch-connected system with 4 port networks both use 12 transceivers. Therefore, these transceivers may be reused from the existing directly connected system. However, if more than one EPN is included in the order for extra capacity, additional 9823-type transceivers (ordered separately) are also shipped with the EPN equipment.

   The distance limit of 9823-A transceivers is 4900 feet and 9823-B transceivers is 25,000 feet.

Remove PNC Duplication from System Translations

1. Log in as ‘‘craft’’ at the `login:` prompt on the G3-MT or G3-MA.
2. Enter **`status pnc`**, and press RETURN to determine which is the active port-network controller (PNC).

   If the active PNC is ‘‘pnc-b,’’ enter **`reset pnc interchange`**, and press RETURN to switch the active PNC to ‘‘pnc-a.’’
3. Enter **`busyout pnc`**, and press RETURN to busy out the standby PNC.
4. Disable PNC duplication for the system by entering **`change system-parameters duplication`**, pressing RETURN, and setting the “PNC Duplication’’ field to ‘‘no.’’

Remove Fiber Connections from System

1. For each fiber link, enter **`busyout fiber-link`** ***`fiber #`***, and press RETURN to busy out each fiber link in the system.
2. For each fiber link, enter **`remove fiber-link`** ***`fiber #`***, and press RETURN to remove each fiber link from system translations.
3. Enter **`change circuit pack`**, and press RETURN to remove TN570 EI circuit packs from system translations.
4. Completely remove the existing fiber connections from the directly connected system (See following figures).

   Save the removed TN570 EI circuit packs, 9823-type transceivers, and FL2P-P-xx fiber cables. Some of these will be reused.

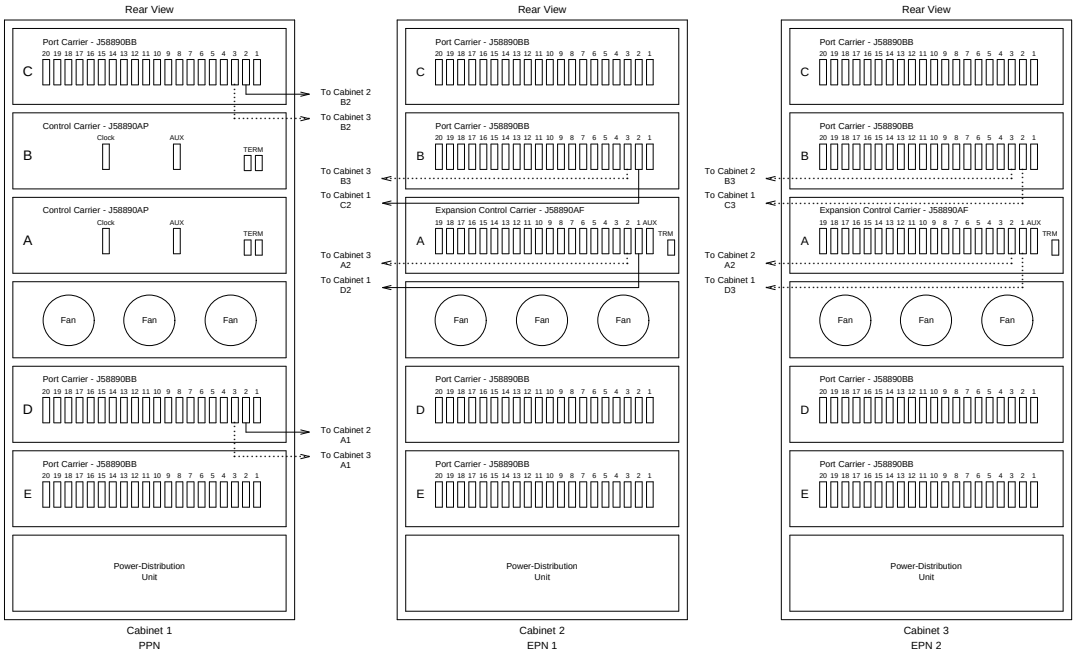

Figure 10-88. Directly Connected Critical-Reliability G3r with Two MCC EPNS

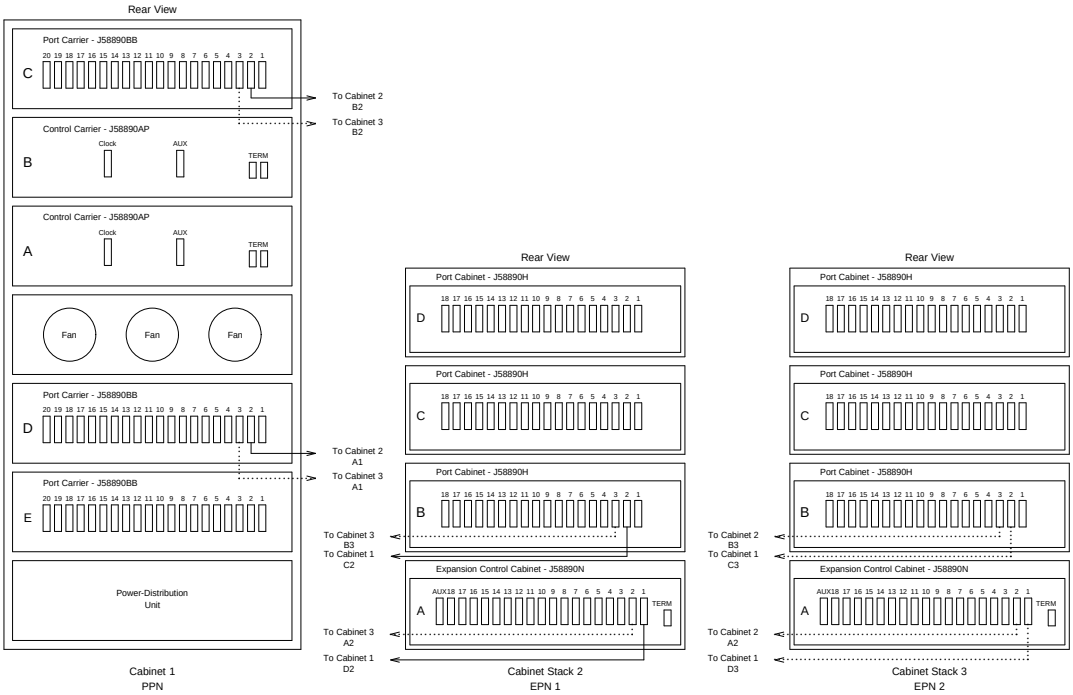

Figure 10-89. Directly Connected Critical-Reliability G3r with Two SCC EPNs

Shut Down DEFINITY AUDIX and Install New SNC Carriers

NOTE:
This section need not be executed if the new SNC carriers were shipped configured in a new MCC EPN.

1. See WARNING. If a DEFINITY AUDIX System resides in the MCC port network where the SNC carrier will be installed, shut down the AUDIX assembly and allow the disk to completely spin down.

   WARNING:
   Neglecting to shut down an AUDIX assembly before powering down the system cabinet where it resides can damage the AUDIX disk.

2. See WARNING. Unseat the AUDIX assembly from its backplane connectors.

   WARNING:
   Before inserting or removing a circuit pack from a cabinet, put on a wrist strap and attach its plug or clip to the cabinet's frame.

3. Power down the MCC port network where the new SNC carriers will reside.
4. Refer to the following portions of "7. Add Switched Node Carrier" on page 10-50:
   - Prepare New Switch Node Carrier
   - Install New Switch Node Carrier
   - Install Circuit Packs

   (See Figure 10-90 for typical circuit-pack locations in these new carriers.)
5. See WARNING. If a DEFINITY AUDIX System resides in the port network where the new SNC carrier was installed, reseat the AUDIX assembly to its backplane connectors.

   WARNING:
   Before inserting or removing a circuit pack from a cabinet, put on a wrist strap and attach its plug or clip to the cabinet's frame.

6. Power up the MCC port network where the new SNC carriers were installed.

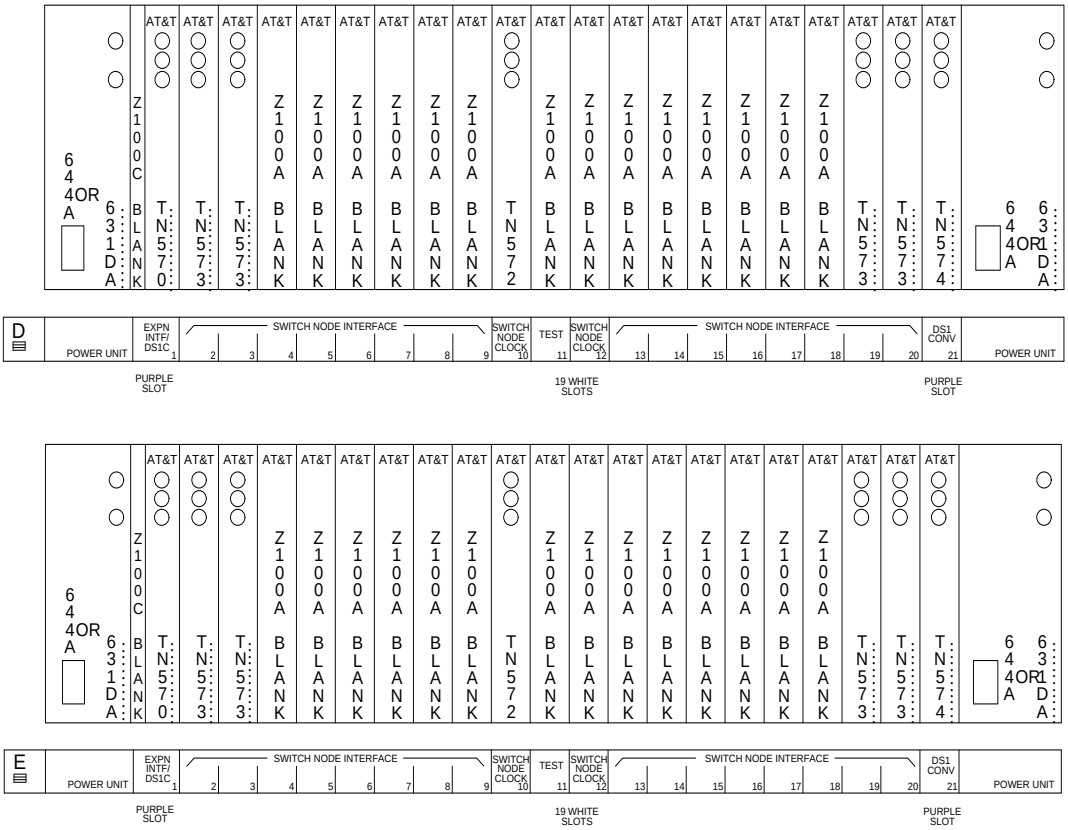

Figure 10-90. Typical Switch Node Carriers for Critical-Reliability G3r with Four PNs

Install New MCC Expansion Port Network

NOTE:
This section may not need to be executed if new SNC carriers were installed in spare positions of an MCC port network.

Refer to ‘‘Install Multicarrier Cabinet Expansion Port Network’’ in *DEFINITY Communications System Generic 1 and Generic 3 Installation and Test*, 555-230-104, Issue 5, for instructions on installing the EPN.

Add PNC Duplication to System Translations

Enable PNC duplication for the system by entering **`change system-parameters duplication`**, pressing (RETURN), and setting the ''PNC Duplication'' field to ''yes.''

Translate SNC Carriers

Refer to the ''SNI Administration and SNI Board Insertion'' section of *DEFINITY Communications System Generic 3r Maintenance*, 555-230-105 for information about translating the new SNC carriers.

Add Fiber Connections to System

1. See NOTE. Add the new fiber connections to completely reconnect the port networks as a switch-connected system (See following figures).

   Reuse the removed TN570 EI circuit packs and 9823-type transceivers. Also, reuse any usable FL2P-P-xx fiber cables.

   NOTE:
   For detailed information about installing fiber connections refer to *DEFINITY Communications System Generic 1 and Generic 3 Installation and Test*, 555-230-104, Issue 5.

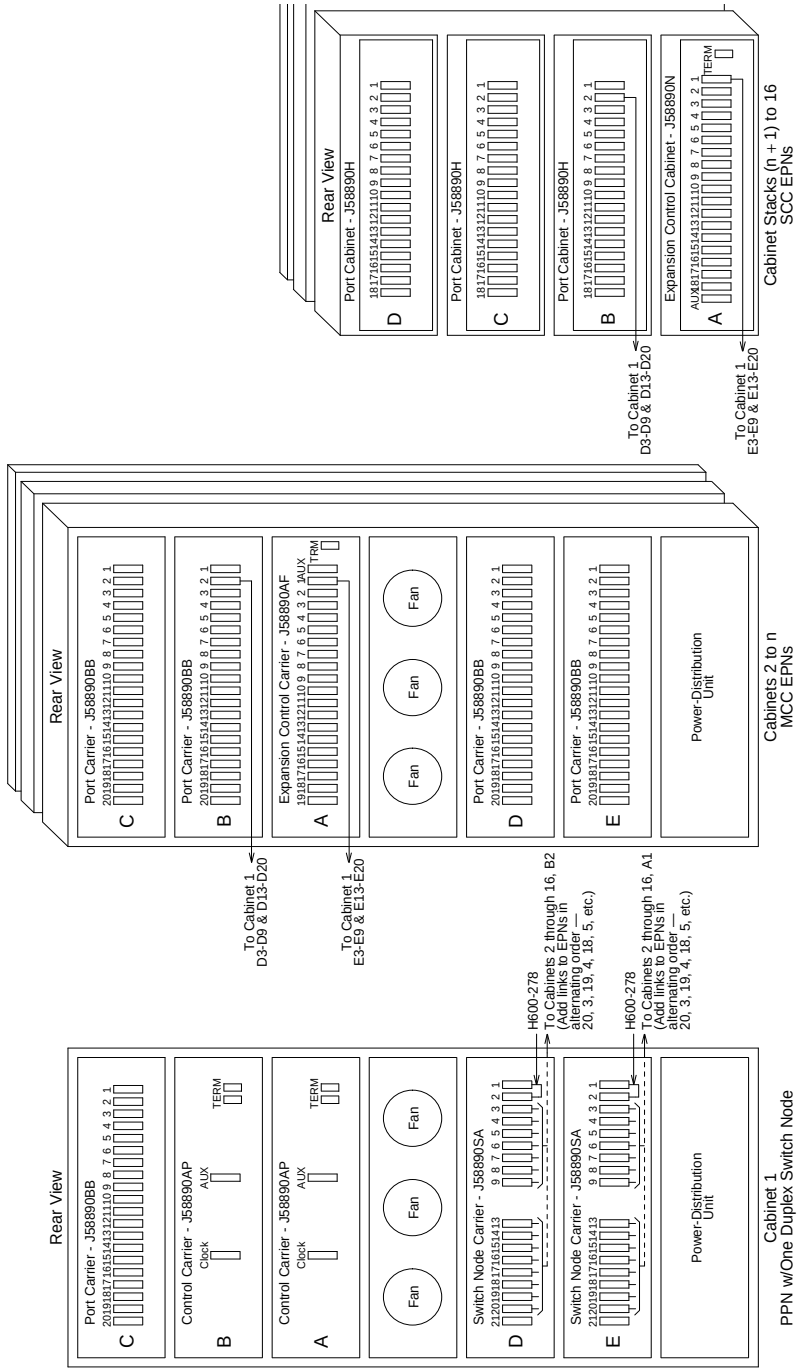

Figure 10-91. Switch-Connected Critical-Reliability G3r with SNC in PPN

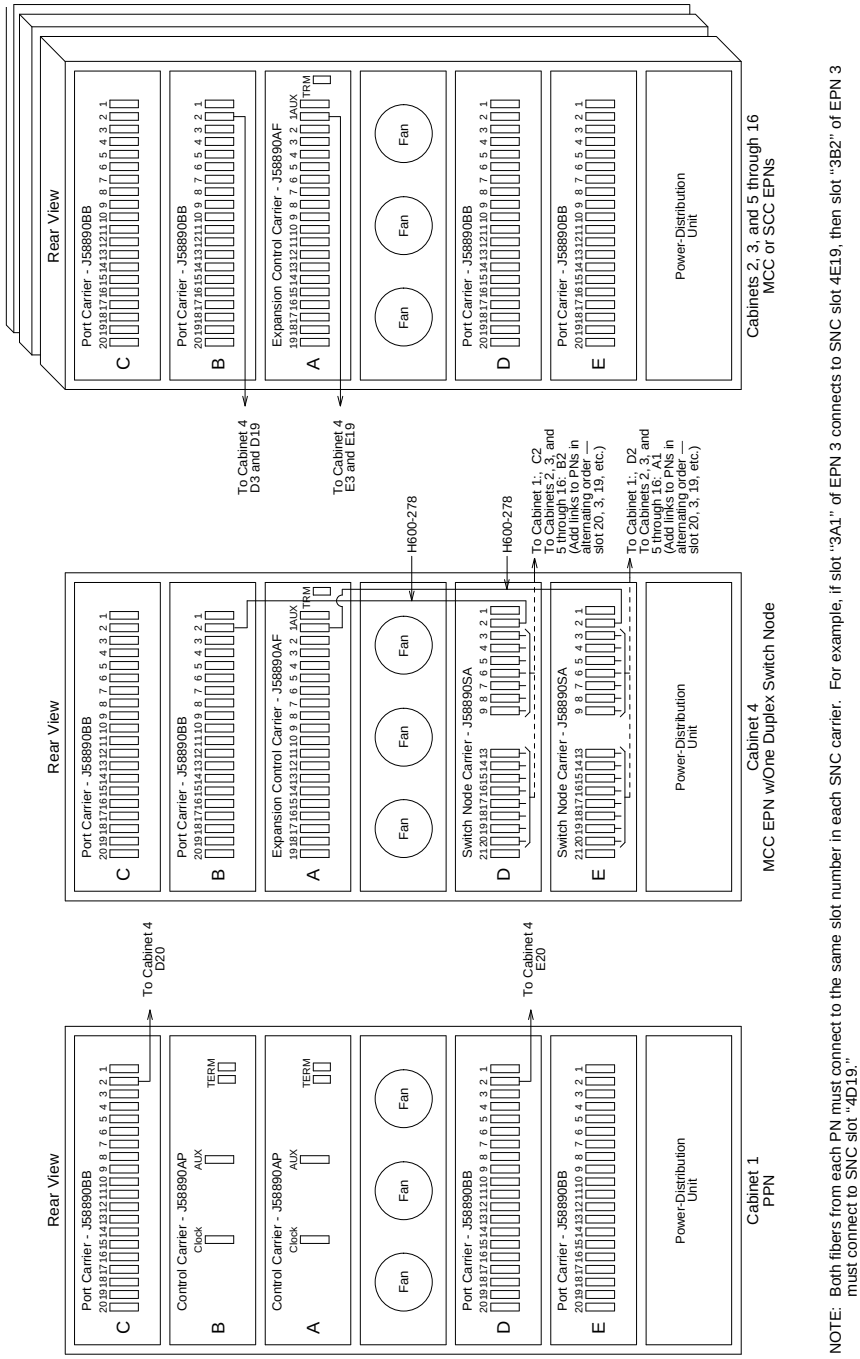

Figure 10-92. Switch-Connected Critical-Reliability G3r with SNC in EPN

Translate New Fiber Connections

Refer to the "Fiber Link Administration" section of *DEFINITY Communications System Generic 3 V4 Implementation*, 555-230-655, for information to translate the new fiber connections.

Save Translations

1. Enter **`status spe`**, and press (RETURN) to verify that the standby SPE is refreshed and that the standby disk is in service.
2. Enter **`save translation [both] disk`**, and press (RETURN). This command instructs the system to take all translation information in memory and write it to the disks.
3. If a TN750 Announcement circuit pack resides in an MCC port network that was powered down to install SNC carriers, enter **`list configuration software-version`**, and press (RETURN).

   If Page 2 of this form shows that recorded announcements were saved, these announcements can be restored using the restore announcements command. Enter **`restore announcements [disk | tape]`**, and press (RETURN).
4. Enter **`backup disk [both]`** and press (RETURN). This command instructs the system to backup the current information on disk to the system tapes.
5. Update backup tapes, if required.

Run Acceptance Tests

Refer to Chapter 11 of *DEFINITY Communications System Generic 1 and Generic 3 Installation and Test*, 555-230-104, Issue 5, and perform the appropriate tests.

Removed Equipment

According to pricing conventions for a switch-node addition, any unused fibers and TN570 Expansion Interface circuit packs belong to the customer.

If the customer decides not to keep unused fibers or EIs for possible reuse with a new EPN, this equipment should be returned to AT&T. Also, any extra H600-278 metallic cables shipped loose with SNC carriers should be returned to AT&T. The equipment should be returned according to the requirements outlined in:

BCS/Material Logistics, MSL/Attended Stocking Locations
Methods and Procedures for Basic Material Returns

59. Removing an EPN

When down-sizing a system, it may be necessary to remove an EPN cabinet from the system configuration. A problem may be encountered on some older systems when removing the Tone Clock circuit packs. When displaying the “change circuit” of the B carrier in EPN2, two question marks (??) may appear, meaning no board designation. A minor alarm is generated and cannot be removed.

To remove an EPN from a system, perform the following steps:

1. Power down the EPN to be removed.
2. Remove the associated EIs in the PPN.
3. If a second EPN is present, remove the EIs from the remaining EPN (if it is to remain operational).
4. Remove all fiber-optic cables and transceivers connecting to the EPN to be removed.
5. Administer all ports/stations that are using the EPN to be removed.
6. Use the “change circuit” procedure to blank out the EIs.
7. Save the translations to disk.
8. At the maintenance terminal, execute a **`reset system 4`** command.

The system reboots and performs the board insertion procedure. When completed, all references to the removed EPN and its circuit packs and ports are removed. The minor alarm is cleared.

Hardware Description

11

Circuit Packs in DEFINITY

Table 11-1 lists the circuit packs sorted by apparatus code, including circuit packs used in non-US installations. For more information on the circuit packs and other equipment related to DEFINITY, refer to the *DEFINITY Communications System Generic 3 System Description and Specifications, 555-230-206*.

Table 11-1. Circuit Packs in DEFINITY

Apparatus Code	Name	Type
120A	Integrated CSU Module	Adjunct
122A	Music-on-Hold Interface	Adjunct
631DA1	Power Unit (AC)	Power
631DB1	Power Unit (AC)	Power
644A1	Power Unit (DC)	Power
645B1	Power Unit (DC)	Power
676B	Power Supply (DC)	Power
982LS	Current Limiter	Power
CFY1B	Current Limiter	Power
CPP1	Memory (Expansion) (G3i only)	Control
ED-1E546 (TN2208), (TN2170), (TN566), (TN567)	CallVisor ASAI over the DEFINITY LAN Gateway R1	Port Assembly
ED-1E546 (TN2169) (TN2170)	DEFINITY AUDIX R3 System	Port Assembly
TN417	Auxiliary Trunk	Port
TN419B	Tone-Clock	Control
TN420B/C	Tone Detector	Service
TN429	DIOD Trunk	Port
TN433	Speech Synthesizer	Service
TN436B	DID Trunk	Port
TN437	Tie Trunk	Port
TN438B	CO Trunk	Port
TN439	Tie Trunk	Port
TN447	CO Trunk	Port
TN457	Speech Synthesizer	Service
TN458	Tie Trunk	Port
TN459B	DID Trunk	Port
TN464C/D/E/F	DS1 (T1/E1) Interface	Port
TN465/B/C	CO Trunk	Port

Table 11-1. Circuit Packs in DEFINITY

Apparatus Code	Name	Type
TN467	Analog Line	Port
TN468B	Analog Line	Port
TN479	Analog Line	Port
TN497	Tie Trunk	Port
TN553	Packet Data Line	Port
TN556/B	ISDN BRI 4-Wire S/T-NT Line	Port
TN570/B	Expansion Interface (EI)	Port
TN572	SN Clock	Control
TN573	SN Interface	Control
TN574	DS1 Converter	Port
TN577	Packet Gateway	Port
TN722B	DS1 Tie Trunk	Port
TN725B	Speech Synthesizer	Service
TN726/B	Data Line	Port
TN735	MET Line	Port
TN742	Analog Line	Port
TN744/B/C	Call Classifier	Service
TN746/B	Analog Line	Port
TN747B	CO Trunk	Port
TN748/B/C/D	Tone Detector	Service
TN750/B/C	Announcement	Service
TN753	DID Trunk	Port
TN754/B	Digital Line (4-Wire)	Port
TN755B	Power Unit, Neon	Power
TN756	Tone Detector	Service
TN758	Pooled Modem	Port
TN760B/C/D	Tie Trunk	Port
TN762B	Hybrid Line	Port
TN763B/C/D	Auxiliary Trunk	Port
TN765	Processor Interface (G3i only)	Control
TN767B/C/D/E	DS1 Interface	Port

Table 11-1. Circuit Packs in DEFINITY

Apparatus Code	Name	Type
TN768	Tone-Clock	Control
TN769	Analog Line	Port
TN771D	Maintenance/Test	Service
TN772	Duplication Interface	Control
TN775/B	Maintenance	Service
TN776	Expansion Interface (EI) (G3i only)	Port
TN777/B	Network Control (G3i only)	Control
TN778	Packet Control	Control
TN780	Tone-Clock	Control
TN786B	Processor	Control
TN1648	System Access/Maintenance	Control
TN1650B	Memory	Control
TN1655	Packet Interface	Control
TN1656	Tape Drive	Control
TN1657	Disk Drive	Control
TN2135	Analog Line	Port
TN2136	Digital Line (2-Wire)	Port
TN2138	CO Trunk	Port
TN2139	DID Trunk	Port
TN2140/B	Tie Trunk	Port
TN2144	Analog Line	Port
TN2146	DID Trunk	Port
TN2147/C	CO Trunk	Port
TN2149	Analog Line	Port
TN2180	Analog Line	Port
TN2181	Digital Line (2-Wire)	Port
TN2182	Tone-Clock	Control
TN2183	Analog Line	Port
TN2184	DIOD Trunk	Port
TN2198	ISDN BRI 2-Wire U Interface	Port

Table 11-1. Circuit Packs in DEFINITY

Apparatus Code	Name	Type
TN2199	CO Trunk	Port
TN2202	Ring Generator	Service
UN330B	Duplication Interface	Control
UN331B	Processor	Control
UN332	Mass Storage/Network Control	Control
WP-90510	Power Supply (AC)	Power
WP-91153	Power Supply (AC)	Power

References

A

The following is a list of DEFINITY® Communications System Generic 3 documents, including a brief description of each document.

To order copies, refer to the address and telephone number on the inside cover of this document. For additional DEFINITY® Communications System documents, refer to the *GBCS Publications Catalog,* 555-000-010, available from the AT&T Customer Information Center.

Basic

The following are basic documents for the DEFINITY® Communications System.

DEFINITY Communications System Generic 3 Feature Description, Issue 2 **555-230-204**

Provides comprehensive technical descriptions of system features and parameters. Includes the applications and benefits, feature interactions, administration requirements, hardware and software requirements, and a brief discussion of data communications and private networking configurations.

DEFINITY Communications System Generic 3 Version 4 Implementation, Issue 1 **555-230-655**

DEFINITY Communications System Generic 3 V2/V3 Implementation, Issue 1 Addendum 1 and Addendum 2 **555-230-653**

Provides step-by-step procedures for preparing the hardcopy forms that correspond to the screens and are required to implement the features, functions, and services of the system. Includes procedures for completing a communications survey. Includes an initial set of blank forms (555-230-655B, 555-230-653B).

DEFINITY Communications System Generic 3 Version 4 Implementation Blank Forms, Issue 1 **555-230-655B**

DEFINITY Communications System Generic 3 V2/V3 Implementation Blank Forms, Issue 1 **555-230-653B**

Provides additional blank hardcopy forms that correspond to the screens that are required to implement the features, functions, and services of the system.

Copies of these forms are automatically included with the *DEFINITY Communications System Generic 3 Version 4 Implementation, Issue 1*, 555-230-655 or *DEFINITY Communications System Generic 3 V2/V3 Implementation, Issue 1*, 555-230-653. Use this order number to purchase additional forms.

DEFINITY Communications System Generic 3 System Description and Specifications, Issue 3 **555-230-206**

Provides a technical description of the systems and is intended for service personnel, sales personnel, and customers who need a comprehensive overview of the system. Includes descriptions of hardware, software features, technical specifications, environment requirements, maintenance requirements, and illustration of components.

DEFINITY Communications System Generic 3 Version 4 Traffic Reports, Issue 2 **555-230-511**

Provides detailed descriptions of all the measurement, status, and security reports available in the system and is intended for administrators who validate traffic reports and evaluate system performance. This document was titled *System Reports* for earlier systems. Includes corrective actions for potential problems.

DEFINITY Communications System Generic 1 and Generic 3 Installation and Test, Issue 5 **555-230-104**

Provides descriptions of the procedures for installing and testing the system's common equipment and adjuncts. Includes setup procedures for the system management terminal, power and grounding requirements, and testing steps. Includes compete details on system wiring. Provides both domestic and international information.

DEFINITY Communications System Generic 3 Installation (for Single-Carrier Cabinets), Issue 1

555-230-894 UK English
555-230-895 German
555-230-896 French
555-230-897 Spanish
555-230-900 Chinese

Provides procedures and information for hardware installation and initial testing of the DEFINITY Communications System Generic 3 Single-Carrier Cabinets only. The UK version is shipped with all Single-Carrier Cabinet systems in the United States. Some languages may not be available until a future date.

DEFINITY Communications System Generic 3 Version 1.1 - Version 4 Upgrades and Additions, Issue 2 **555-230-107**

Provides procedures for an installation technician to convert an existing DEFINITY Communications System Generic 1, Generic 2, Generic 3 Version 1, Generic 3 Version 2, Generic 3 Version 3, or System 75 R1V3 to Generic 3 Version 4. Included are upgrade considerations, lists of required hardware, and step-by-step upgrade procedures. Also included are procedures to add control carriers, switch node carriers, port carriers, circuit packs, auxiliary cabinets, and other equipment.

DEFINITY Communications System Generic 3 vs/s/i Version 1.1 - Version 4 Upgrades and Additions, Issue 1 **555-230-108**

Provides procedures for an installation technician to convert an existing DEFINITY Communications System Generic 3 Version 1, Generic 3 Version 2, Generic 3 Version 3, to Generic 3 Version 4. Included are upgrade considerations, lists of required hardware, and step-by-step upgrade procedures. Also included are procedures to add control carriers, switch node carriers, port carriers, circuit packs, auxiliary cabinets, and other equipment.

DEFINITY Communications System Generic 3r Version 1.1 - Version 4 Upgrades and Additions, Issue 1 **555-230-109**

Provides procedures for an installation technician to convert an existing DEFINITY Communications System Generic 3r Version 1, Generic 3r Version 2, Generic 3r Version 3, to Generic 3r Version 4. Included are upgrade considerations, lists of required hardware, and step-by-step upgrade procedures. Also included are procedures to add control carriers, switch node carriers, port carriers, circuit packs, auxiliary cabinets, and other equipment.

DEFINITY Communications System Generic 3r Maintenance, Issue 4 **555-230-105**

DEFINITY Communications System Generic 3i/s/vs Maintenance, Issue 7 **555-204-105**

Provide detailed descriptions of the procedures for monitoring, testing, and maintaining the systems. Included are maintenance commands, step-by-step trouble-clearing procedures, the procedures for using all tests, and explanations of the system's error codes.

An Introduction to DEFINITY Communications System Generic 3, Issue 1 **555-230-023**

Provides a detailed overview of the system including descriptions of many of the major features, applications, hardware, system capabilities, and the AT&T support provided with the system. This document reflects Generic 3 Version 2 software, but still contains relevant information.

DEFINITY Communications System Generic 3 Planning and Configuration, Issue 2 **555-230-601**

Provides step-by-step procedures for the account team in determining the customer's equipment and hardware requirements to configure a system according to the customer specifications. Includes detailed requirements and block diagrams. This document reflects Generic 3 Version 2 software, but still contains relevant information.

GBCS Products Security Handbook, Issue 4 **555-025-600**

Provides information about the risks of telecommunications fraud and measures for addressing those risks and preventing unauthorized use of GBCS products. This document is intended for telecommunications managers, console operators, and security organizations within companies.

DEFINITY Communications System and System 75 and System 85 Terminals and Adjuncts Reference, Issue 7 **555-015-201**

Provides descriptions of the peripheral equipment that can be used with System 75, System 85, and DEFINITY Communications System. This document is intended for customers and AT&T account teams for selecting the correct peripherals to accompany a system.

DEFINITY Communications System Generic 1 and Generic 3 Voice Terminal Operations, Issue 1 **555-230-701**

Provides detailed operating instructions for system features on each type of voice terminal. Included are definitions of voice features and user requirements.

DEFINITY Communications System Generic 1, Generic 3, and System 75 Voice Terminal Guide Builder, Issue 1 **555-230-755**

Provides capability to produce laser-printed documentation for specific voice terminals. The software is supported by a comprehensive user's guide and on-line help. This product requires a 386 PC, minimum of 6 Mbytes disk space, minimum of 4 Mbytes RAM, a printer supported by Microsoft GDI printer drive, and Microsoft Windows 3.1 or higher. A mouse is recommended.

Call Center

The following list of documents are Call-Center specific. Refer also to the basic DEFINITY Communications System documents.

DEFINITY Communications System Generic 3 Call Vectoring/Expert Agent Selection (EAS) Guide, Issue 4 **585-230-520**

Provides information on how to write, use, and troubleshoot vectors, which are command sequences that process telephone calls in an Automatic Call Distribution (ACD) environment. It is provided in two parts: tutorial and reference.

The tutorial provides step-by-step procedures for writing and implementing basic call vector scripts.

The reference includes detailed descriptions of the call vectoring features, vector management, vector administration, adjunct routing, troubleshooting, and interactions with management information systems (including the Call Management System).

DEFINITY Communications System Generic 3 Basic Call Management System (BCMS) Operations, Issue 4 **555-230-704**

Provides detailed instructions on how to generate reports and manage the system and is intended for telecommunications managers who wish to use BCMS reports and system managers responsible for maintaining the system. If Issue 4 is unavailable, use Issue 3.

Networks

The following list of documents are network-specific. Refer also to the basic DEFINITY Communications System documents.

DEFINITY Communications System Generic 3 Wideband Technical Reference, Issue 1 **555-230-230**

Provides detailed information regarding the Wideband Switching feature for the system and is intended for users and technical support personnel involved with the installation, administration, and operation of this feature. This feature provides high speed end-to-end connectivity between customer endpoints where dedicated facilities are not economical or appropriate. The primary function is to support high speed video-conferencing and data applications.

DEFINITY Communications System Generic 2.2 and Generic 3 Version 2 DS1/CEPT1/ISDN PRI Reference Manual, Issue 1 **555-025-107**

Provides a detailed technical description of digital trunks in the DEFINITY Communications Systems. This includes trunks conforming to the DS1 standard (1.544 Mbps) and the CEPT1 standard and all other methods of signalling, including bit-oriented signalling as well as ISDN-PRI signalling. This document includes background information on these topics, information on how digital trunk capabilities have been designed into the DEFINITY Communications System and information for field personnel and customers on how to provision and administer digital trunk capabilities and features. Provides both domestic and international information.

Application Specific

The following list of documents are application-specific. Refer also to the basic DEFINITY Communications System documents.

DEFINITY Communications System Generic 2 to Generic 3 Version 4 Transition Reference, Issue 1 **555-230-636**

Provides detailed descriptions of the difference between features and administrative forms for systems Generic 2 to Generic 3 Version 4 and is intended for AT&T personnel and customers involved in planning upgrades and migrations from an older system. Includes descriptions of new administrative commands.

DEFINITY Communications System Generic 3 CallVisor ASAI Planning Guide, Issue 4 **555-230-222**

Provides procedures and directions for the account team and customer personnel for effectively planning and implementing the CallVisor Adjunct/Switch Application Interface (ASAI) PBX-Host environment. The CallVisor ASAI is a communications interface that allows adjunct processors to access switch features and to control switch calls. It is implemented using an Integrated Services Digital Network (ISDN) Basic Rate Interface (BRI). Included are hardware and software requirements.

DEFINITY Communications System Generic 3 CallVisor ASAI Protocol Reference, Issue 4 **555-230-221**

Provides detailed layer 3 protocol information regarding the CallVisor Adjunct/Switch Application Interface (ASAI) for the systems and is intended for the library or driver programmer of an adjunct processor to create the library of commands used by the applications programmers. Describes the ISDN message, facility information elements, and information elements.

DEFINITY Communications System Generic 3 CallVisor ASAI Technical Reference, Issue 4 **555-230-220**

Provides detailed information regarding the CallVisor Adjunct/Switch Application Interface (ASAI) for the systems and is intended for the application designer responsible for building and/or programming custom applications and features.

DEFINITY Communications System Installation, Administration, and Maintenance of CallVisor ASAI Over the DEFINITY G3 LAN Gateway, Issue 1 **555-230-223**

Provides procedures for installation, administration, and maintenance of the CallVisor Adjunct/Switch Application Interface (ASAI) Ethernet application and is intended for system administrators, telecommunications managers, Management Information System (MIS) managers, LAN managers, and AT&T personnel. The ASAI-Ethernet application provides ASAI functionality using 10Base-T Ethernet rather than BRI as a transport media.

DEFINITY Communications System Generic 3 Automatic Call Distribution Agent Instructions, Issue 4 **555-230-722**

Provides information for use by agents after they have completed ACD training. Includes descriptions of ACD features and the procedures for using them.

DEFINITY Communications System Generic 3 Automatic Call Distribution Supervisor Instructions, Issue 3 **555-230-724**

Provides information for use by supervisors after they have completed ACD training. Includes descriptions of ACD features and the procedures for using them.

DEFINITY Communications System Generic 1 and Generic 3 Console Operation, Issue 2 **555-230-700**

Provides operating instructions for the attendant console. Included are descriptions of the console control keys and functions, call-handling procedures, basic system troubleshooting information, and routine maintenance procedures.

DEFINITY Communications System Console Operations Quick Reference, Issue 1

555-230-890 UK English
555-230-891 German
555-230-892 French
555-230-893 Spanish
555-230-920 Chinese

Provides operating instructions for the attendant console. Included are descriptions of the console control keys and functions, call handling, basic system-troubleshooting information, and routine maintenance procedures. Some languages may not be available until a future date.

An Introduction to DEFINITY Communications System Generic 3 Hospitality Services, Issue 1 **555-230-021**

Provides an overview of the features available for use by the lodging and health industries to improve their property management and to provide assistance to their employees and clients. Included are brief definitions of many of the system features, descriptions of the hardware, planning considerations, and list of the system capabilities.

DEFINITY Communications System Generic 1 and Generic 3 User's Guide Hospitality Operations, Issue 2 **555-230-723**

Provides step-by-step procedures for using the features available for use by the lodging and health industries to improve their property management and to provide assistance to their employees and clients. Includes detailed descriptions of reports.

Abbreviations

A

AAR
Automatic Alternate Routing

AC
alternating current

ACD
Automatic Call Distribution

ADU
asynchronous data unit

ALM-ACK
alarm acknowledge

AN
analog

AP
applications processor

ARS
Automatic Route Selection

ASAI
Adjunct/Switch Application Interface

ASCII
American Standard Code for Information Interchange

AUDIX
Audio Information Exchange

AWG
American wire gauge

B

BCMS
Basic Call Management System

BCT
business communications terminal

BHCC
busy-hour call completions

BLF
busy lamp field

BOS
bit-oriented signaling

BRI
basic rate interface

BTU
British thermal unit

C

CAP
cable access panel

CAS
Centralized Attendant Service

CCITT
Consultative Committee for International Telephone and Telegraph

CCMS
common channel message set

CCS
hundred call seconds

CCSA
common control switching arrangement

CDAP
call detail acquisition and processing

CDM
channel division multiplexing

CDRR
Call Detail Recording and Reporting

CDRU
call detail recording utility

CEM
channel expansion multiplexing

CI
clock input

CMDR
centralized message detail recorder

CMS
Call Management System

CO
central office

COR
class of restriction

COS
class of service

CP
circuit pack

CPE
customer premises equipment

CPN/BN
calling party numbers/billing number

CR
customer ring

CRC
cyclical redundancy checking

CSA
Customer Software Administration or Canadian Safety Association

CSD
customer service document

CSM
Centralized System Management

CSS
center stage switch

CSSO
Customer Software Support Organization

CSU
channel service unit

CT
customer tip

D

DC
direct current

DCE
data communications equipment

DCP
digital communications protocol

DCS
Distributed Communications System

DDC
Direct Department Calling

DDD
direct distance dialing

DID
Direct Inward Dialing

DLDM
data line data module

DMI
digital multiplexed interface

DND
do not disturb

DNIS
Dialed Number Identification Service

DOD
Direct Outward Dialing

DOT
duplication-option terminal

DOSS
delivery operations support system

DRAM
dynamic random access memory

DS1
Digital Service 1

DS1C
Digital Service 1 converter

DSI
digital service interface

DSU
data service unit

DTDM
digital terminal data module

DTE
data terminal equipment

DTMF
dual tone multifrequency

DTS
disk/tape system

DUPN
duplication interface

DXS
Direct Extension Selection

E

E&M
ear and mouth (Receive and Transmit)

EBCDIC
Extended Binary Coded Decimal Interexchange Code

EFS
enhanced feature set

EI
expansion interface

EIA
Electronic Industries Association

EMI
electromagnetic interference

EPN
expansion port network

EPROM
erasable programmable read only memory

EPSCS
Enhanced Private Switched Communications Services

ESF
extended superframe format

ETN
electronic tandem network

F

FAC
feature access code

FAS
facility-associated signaling

FCC
Federal Communications Commission

FIC
facility interface codes

FNPA
foreign numbering plan area

FRL
Facilities Restriction Level

FSAC
field support administration center

FX
foreign exchange

G

GPTR
general purpose tone receiver

GRS
Generalized Route Selection

H

HCMR
high-capacity minirecorder

HNPA
home numbering plan area

I

IAS
Inter-PBX Attendant Service

IC
intercabinet

ICC
intercarrier cable

ICI
incoming call identifier

ICM
Inbound Call Management

ID
identification

IDDD
international direct distance dialing

IE
information element

INADS
Initialization and Administration System

INS
ISDN network service

INWATS
inward Wide Area Telecommunications Service

ISDN
Integrated Services Digital Network

ISN
Information Systems Network

ITP
installation test procedure

IXC
interexchange carrier

K

KBPS
kilobits per second

KHz
kilohertz

L

LAN
local area network

LAPD
link-access protocol D

LDN
listed directory number

LED
light-emitting diode

LSU
local storage unit

LWC
Leave Word Calling

M

MA-UUI
message-associated user-to-user signaling

M-Bus
memory bus

MBPS
megabits per second

MCC
multicarrier cabinet

MCS
Message Center Service

MDM

modular data module

MDR
message detail record

MET
multibutton electronic telephone

MHz
megahertz

MIS
management information system

MISCID
miscellaneous identification

MMS
Material Management Services

MOS
message-oriented signaling

MPDM
modular processor data module

MS
Message Server

MSA
message service adjunct

MSL
material stocking location

MSS
mass storage system

MTDM
modular trunk data module

MTP
maintenance tape processor

MTT
multitasking terminal

MWL
message waiting lamp

N

NAU
network access unit

NCOSS
Network Control Operations Support Center

NCSO
National Customer Support Organization

NFAS
nonfacility-associated signaling

NID
network inward dialing

NPA
numbering plan area

NPE
network processing element

NQC
number of queued calls

NSE
night service extension

NSU
network sharing unit

NTSO
National Technical Service Organization

NXX
public network office code

O

OCM
Outbound Call Management

OPS
Off-Premises Station

OQT
oldest queued time

OSHA
Occupational Safety and Health Act

OSS
operations support system

P

PBX
private branch exchange

PC
personal computer

PCOL
Personal Central Office Line

PCOLG
Personal Central Office Line group

PCM
pulse code modulated

PCS
Permanent Switched Calls

PDM
processor data module

PDS
premises distribution system

PE
processing element

PEC
price element code

PGN
partitioned group number

PIB
processor interface board

PL
private line

PMS
Property Management System

PN
port network

PNC
port-network control

PPM
periodic pulse metering

PPN
processor port network

PRI
primary rate interface

PSC
premises service consultant

PSDN
packet-switched public data network

PT
personal terminal

Q

QPPCN
quality protection plan change notice

R

RAM
random access memory

RBOC
regional Bell operating company

RCL
restricted call list

RHNPA
remote home numbering plan area

RISC
reduced instruction set computer

RLT
release link trunk

RMSS
removable mass storage subsystem

RNX
private network location code

ROM
read only memory

RPN
routing plan number

RS
recommended standard

RSC
regional support center

RX
receive

S

SAKI
sanity and control interface

SCC
single-carrier cabinet

SCI
Switch Communications Interface

SCO
System Control Office

SCSI
small computer system interface

SDN
Software Defined Network

SDDN
Software Defined Data Network

SID
station identification number

SIT
special information tones

SMDR
Station Message Detail Recording

SN
switch node

SNI
switch node interface

SPE
switch processing element

SPID
service profile identifier

SSI
standard serial interface

STARLAN
Star-Based Local Area Network

STS
Software Technical Support

ST3
Stratum 3 clock board

T

TAAS
Trunk Answer From Any Station

TAC
trunk access code

TC
technical consultant

TCM
traveling class mark

TDM
time-division multiplexed or trunk data module

TEG
Terminating Extension Groups

TOD
time of day

TOPs
task-oriented protocol

TRACS
Translations Recovery, Additions, and Conversions System

TSC
Technical Service Center

TTL
transistor-transistor logic

TTTN
tandem tie-trunk network

TTY
teletypewriter

TX
transmit

U

UAP
usage allocation plan

UCD
Uniform Call Distribution

UCL
unrestricted call list

UDP
Uniform Dial Plan

UPS
uninterruptible power supply

V

VM
voltmeter

W

WATS
Wide Area Telecommunications Service

Glossary

Numerics

3B2 Message Server
An AT&T software application that combines voice and data messaging services for voice terminal users whose extensions are connected to a DEFINITY G1 or DEFINITY G3.

800 service
A service in the USA, which allows incoming calls from a certain area or areas to an assigned number for a flat-rate charge based on usage.

A

A-law companding
A logarithmic companding algorithm commonly used outside North America and Japan. Compared to Mu-law companding, A-law companding uses fewer of the 255 available quantizing levels to minimize quantizing noise at lower volumes, providing lower apparent fidelity at lower volumes and higher apparent fidelity at higher volumes. See also **companding** and **Mu-law companding**.

access code
A 1-, 2-, or 3-digit dial code used to activate or cancel a feature, or access an outgoing trunk. The star (*) and pound (#) can be used as the first digit of an access code.

access endpoint
Either a nonsignaling channel on a DS1 interface or a nonsignaling port on an analog tie trunk circuit pack that is assigned a unique extension.

access tie trunk
A trunk that connects a main communications system with a tandem communications system in an electronic tandem network (ETN). An access tie trunk can also be used to connect a system or tandem to a serving office or service node. Also called ‘‘access trunk.’’

ACCUNET.
A trademarked name for a family of digital services offered by AT&T in the USA.

adjunct
A processor that does one or more tasks for another processor and that is optional in the configuration of the other processor.

Adjunct-Switch Application Interface (ASAI)
An AT&T recommendation for interfacing adjuncts and communications systems, based on the CCITT Q.932 specification for layer 3.

administer
To access and change parameters associated with the services or features of a system.

administration terminal
A terminal used to administer and maintain a system. See also **terminal**.

American National Standard Code for Information Interchange
See **ASCII**.

analog
The representation of information by means of continuously variable physical quantities such as amplitude, frequency, and phase.

analog data
Data that is transmitted over a digital facility in analog (pulse code modulation) form. The data must pass through a modem either at both ends or at a modem pool at the distant end.

analog telephone
A telephone that receives acoustic voice signals and sends analog electrical signals along the telephone line. Analog telephones are usually served by a single wire pair (tip and ring). The model-2500 telephone set is a typical example of an analog telephone.

analog-to-digital converter (ADC)
A device that converts an analog signal to digital form. See also **digital-to-analog converter**.

angel
A microprocessor located on each port card in a processor port network (PPN). The angel uses the control-channel message set (CCMS) to manage communications between the port card and the archangel on the controlling switch processing element (SPE). The angel also monitors the status of other microprocessors on a port card and maintains error counters and thresholds. See also **archangel**.

answerback code
An assigned number used to respond to a page from a code-calling or loudspeaker-paging system, or to retrieve a parked call.

appearance
A software process that is associated with an extension and whose purpose is to supervise a call. Also called ‘‘call appearance,’’ “line appearance,’’ and ‘‘occurrence.’’

applications processor
A minicomputer used with several user-controlled applications such as traffic analysis and electronic documentation.

architecture
The organizational structure of a system, including hardware and/or software.

ASCII (American National Standard Code for Information Interchange)
The standard code, using a coded character set consisting of 7-bit coded characters (eight bits, including parity check), used for information interchange among data processing systems, data communications systems, and associated equipment. The ASCII set consists of control characters and graphic characters.

asynchronous data transmission
A method of transmitting information at irregular intervals by enclosing data in discrete packages. This type of transmission is advantageous when transmission is not regular (for example, characters typed at a keyboard ctl-W where each character is preceded by a start bit and followed by a stop bit). Also called ‘‘asynchronous transmission.’’ See also **synchronous data transmission**.

asynchronous data unit (ADU)
A data communications equipment (DCE) type device that allows direct connection between RS232C equipment and a digital switch.

attendant
A person at a console on a customer's premises who provides personalized service for incoming callers and voice-services users by performing switching and signaling operations. See also **attendant console**.

attendant console
The workstation used by an attendant. An attendant console allows the attendant to originate a call, answer an incoming call, transfer a call to another extension or trunk, put a call on hold, and remove a call from hold. Attendants using consoles can also manage and monitor some system operations. Also called ''console.'' See also **attendant**.

Audio Information Exchange (AUDIX)
A fully integrated voice-mail system that can be used with a variety of communications systems to provide call-history data, such as subscriber identification and reason for redirection.

automatic trunk
A trunk that does not require the sending or receiving of addressing information because the destination is predetermined. A request for service on the trunk, called a ''seizure,'' is sufficient to route the call. The normal destination of an automatic trunk is the communications-system attendant group. Also called ''automatic incoming trunk'' and ''automatic tie trunk.''

automatic restoration
A service that restores disrupted connections between access endpoints (nonsignaling trunks) and data endpoints (devices that connect the switch to data terminal and/or communications equipment). This restoration is done within seconds of a service disruption so that critical data applications can remain operational.

auxiliary equipment
Equipment used for optional system features, such as Louspeaker Paging and Music-on-Hold.

auxiliary trunk
A trunk used to connect auxiliary equipment, such as radio-paging equipment, to a communications system.

B

bandwidth
The difference, expressed in Hertz, between the highest and lowest frequencies in a range of frequencies.

barrier code
A security code used with the Remote Access feature to prevent unauthorized access to the system.

baud
In telecommunications applications, a unit of transmission speed equal to the number of signal events per second. See also **bit rate** and **bits per second**.

bit (binary digit)
One unit of information in binary notation having two possible states or values, zero or one.

bits per second (bps)
The number of binary units of information that are transmitted or received per second. See also **baud** and **bit rate**.

bit rate
The speed at which bits are transmitted, usually expressed in bits per second. Also called ''data rate.'' See also **baud** and **bits per second**.

bridge (bridging)
The appearance of a voice terminal's extension at one or more other voice terminals.

bridged appearance
A call appearance on a voice terminal that matches a call appearance on another voice terminal for the duration of a call.

buffer
1. In hardware, a circuit or component that isolates one electrical circuit from another. Typically, a buffer holds data from one circuit or process until another circuit or process is ready to accept the data. 2. In software, an area of memory used for temporary storage.

bus
A multiconductor electrical path used to transfer information over a common connection from any of several sources to any of several destinations.

business communications terminal (BCT)
An integrated digital data terminal used for business applications. A BCT can function via a digital terminal data module (DTDM) or a processor data module (PDM) as a special-purpose terminal for services provided by an applications processor (AP) or, as a terminal for data entry and retrieval.

BX.25
An AT&T version of the CCITT X.25 protocol for data communications. BX.25 adds a fourth level to the standard X.25 interface. This uppermost level combines levels 4, 5, and 6 of the International Standards Organization (ISO) reference model.

bypass tie trunks
A one-way, outgoing tie trunk from a tandem switch to a main switch in an electronic tandem network (ETN). Bypass tie trunks, provided in limited quantities, are used as a ''last-choice'' route when all trunks to another tandem switch are busy. Bypass tie trunks are used only if all applicable intertandem trunks are busy.

byte
A sequence of (usually eight) bits processed together.

C

cabinet
Housing for racks, shelves, or carriers that hold electronic equipment.

cable
The physical connection between two pieces of equipment ctl-W for example, cable from a data terminal to a modem ctl-W or between a piece of equipment and a termination field ctl-W for example, circuit pack I/O cables.

cable connector
A cable connector is either a jack (female) or plug (male) on the end of a cable. A cable connector connects wires on a cable to specific leads on telephone or data equipment.

call appearance, attendant console
Six buttons, labeled ‘‘a’’ through ‘‘f,’’ and used to originate, receive, and hold calls. Each button has two lights to show the status of the call appearance.

call appearance, voice terminal
A button labeled with an extension number and used to place outgoing calls, receive incoming calls, or hold calls. Two lights next to the button show the status of the call appearance or the status of the call.

Call Detail Recording Utility (CDRU)
Applications software that collects, stores, optionally filters, and outputs call detail records for direct or polled output to peripheral devices.

Call Management System (CMS)
An application, running on an adjunct processor, that collects information from an Automatic Call Distribution (ACD) unit. CMS enables customers to monitor and manage telemarketing centers by generating reports on the status of agents, splits, trunks, trunk groups, vectors, and vector directory numbers (VDNs), and enables customers to partially administer the ACD feature for a communications system.

call vector
A set of up to 15 vector commands to be performed for an incoming or internal call.

callback call
A call that is automatically returned to a voice terminal user who activated the Automatic Callback or Ringback Queuing feature.

call-waiting ringback tone
A low-pitched tone identical to ringback tone except that the tone decreases in the last 0.2 second. A call-waiting ringback tone notifies the attendant that the Attendant Call Waiting feature has been activated and that the called user is aware of the waiting call.

call work code
A number, up to 16 digits, entered by Automatic Call Distribution (ACD) agents to record the occurrence of customer-defined events (such as account codes, social security numbers, or phone numbers) on ACD calls.

carrier
An enclosed shelf containing vertical slots that hold circuit packs.

CCITT (Comitte Consultatif International Telephonique et Telegraphique)
An international body that sets universal standards for data communications, including Integrated Services Digital Network (ISDN). CCITT members are from telecommunications companies and organizations around the world. See also **BX.25**.

center stage switch (CSS)
The central interface between the processor port network (PPN) and expansion port networks (EPNs) in a CSS-connected system.

central office (CO)
The location housing telephone switching equipment that provides local telephone service and access to toll facilities for long-distance calling.

central office (CO) codes
The first three digits of a 7-digit public network telephone number. Traditional CO codes are numbered from 200 through 999.

central office (CO) trunk
A telecommunications channel that provides access from the system to the public network through the local CO.

channel
A communications path for transmitting voice and/or data.

circuit
1. An arrangement of electrical elements through which electric current flows, providing one or more specific functions. 2. A channel or transmission path between two or more points.

circuit pack
A card on which electrical circuits are printed, and integrated circuit (IC) chips and electrical components are installed. A circuit pack is installed in a switch carrier.

Class of Restriction (COR)
A feature that allows up to 64 classes of call-origination and call-termination restrictions for voice terminals, voice terminal groups, data modules, and trunk groups. See also **Class of Service (COS)**.

Class of Service (COS)
A feature that uses a number (zero through 15) to specify if voice terminal users can activate the Automatic Callback, Call Forwardingctl-WAll Calls, Data Privacy, or Priority Calling features.

Common Control Switching Arrangement (CCSA)
A private telecommunications network using dedicated trunks and a shared switching center for interconnecting company locations.

communications system
The software-controlled processor complex that interprets dialing pulses, tones, and/or keyboard characters and makes the proper interconnections both within the system and external to the system. The communications system itself consists of a digital computer, software, storage device, and carriers with special hardware to perform the actual connections. A communications system provides voice and/or data communications services, including access to public and private networks, for telephones and data terminals on a customer's premises. See also **switch**.

companding
A method of improving the apparent fidelity of a digitally encoded voice transmission with a limited set of discrete quantizing levels.

In digital telephony, voice signals are converted into digital bit streams by:

- Sampling the amplitude (current sound volume) of an analog voice signal 8000 times per second
- Digitally encoding each sample into the 8-bit content of a time slot

This conversion algorithm provides 255 discrete numerical quantities (that is, ''quantizing levels'') and a signal polarity indicator. Since human listeners discriminate between and obtain more information from low-volume sounds, ''companding'' algorithms use more of the available quantizing levels (than a linear algorithm would) to more accurately encode low-volume sounds (that is, minimize quantizing noise at lower volumes), while allowing the higher volumes to have additional quantizing noise.

confirmation tone
Three short bursts of tone followed by silence to confirm that a feature activation, deactivation, or cancelation has been accepted.

connectivity
The connection of disparate devices within a single system.

console
See **attendant console**.

control cabinet
See **control carrier**.

control carrier
A carrier in a multicarrier cabinet that contains the switch processing element (SPE) circuit packs and, unlike a G3r control carrier, port circuit packs. Also called ''control cabinet'' in a single-carrier cabinet. See also **switch processing element**.

Coverage Answer Group
A group of up to eight voice terminals that ring simultaneously when a call is redirected to it by Call Coverage. Any one of the group can answer the call.

coverage call
A call that is automatically redirected from the called party's extension number to an alternate answering position when certain coverage criteria are met.

coverage path
The order in which calls are redirected to alternate answering positions.

coverage point
An extension or attendant group, vector directory number (VDN), or Automatic Call Distribution (ACD) split designated as an alternate answering position in a coverage path.

covering user
A person at a coverage point who answers a redirected call.

critical-reliability system
A system that has the following duplicated items: control carriers, tone-clock circuit packs, expansion interface (EI) circuit packs, cabling between port networks (PNs), and center-stage switch (CSS) carriers in a CSS-connected system. See also **duplicated common control**, **duplication**, **duplication option**, and **high-reliability system**.

D

data channel

A communications path between two points used to transmit digital signals.

data communications equipment (DCE)
The equipment ctl-W usually a modem, data module, or packet assembler/disassembler ctl-W on the network side of a communications link that provides the functions to make the binary serial data from the source or transmitter compatible with the communications channel.

data link
The configuration of physical facilities enabling end terminals to communicate directly with each other.

data module
An interconnection device between a basic rate interface (BRI) or Digital Communications Protocol (DCP) interface of DEFINITY Generic 1 and DEFINITY Generic 3 and data terminal equipment (DTE) or data circuit-terminating equipment (DCE).

data path
The end-to-end connection used for a data-communications link. A data path is the combination of all the elements of an interprocessor communication in a distributed communications system (DCS).

data port
A point of access to a computer that uses trunks or lines for transmitting or receiving data.

data rate
See **bit rate**.

data service unit (DSU)
A device designed to transmit digital data on transmission facilities.

data terminal
An input/output (I/O) device that has either switched or direct access to a host computer or to an applications processor (AP).

data terminal equipment (DTE)
Equipment consisting of the endpoints in a connection over a data circuit. For example, in a connection between a data terminal and a host, the terminal, the host, and their associated modems or data modules make up the DTE. DTE usually consists of the following functional units: control logic, buffer store, and one or more input or output devices or computers. DTE can contain error control, synchronization, and telephone-identification capabilities.

delay-dial trunk
A trunk that allows dialing directly into a communications system ctl-W that is, the digits are received as they are dialed.

designated voice terminal
The specific voice terminal to which calls, originally directed to a certain extension number, are redirected. Commonly used to mean the ‘‘forwarded-to’’ terminal when Call Forwarding All Calls is active.

dial-repeating tie trunk
A tie trunk that transmits called-party addressing information between two communications systems.

digit conversion
A process used to convert specific dialed numbers into other dialed numbers.

Digital Communications Protocol (DCP)
An AT&T proprietary protocol used to transmit both digitized voice and digitized data over the same communications link. A DCP link is made up of two 64-kbps information (I-) channels and one 8-kbps signaling (S-) channel.

digital data endpoints
In DEFINITY Generic 1 and Generic 3i, digital data endpoints include devices such as the 510D terminal or the 515-type business communications terminal (BCT).

digital multiplexed interface (DMI)
An interface that provides connectivity between a communications system and a host computer or between two communications systems using digital signal level-1 (DS1) 24th-channel signaling. DMI provides 23 64-kbps data channels and 1 common signaling channel over a twisted-pair connection. DMI is offered through two capabilities: bit-oriented signaling (DMI-BOS) and message-oriented signaling (DMI-MOS).

digital terminal data module (DTDM)
An integrated or adjunct data module that shares with a digital telephone the same physical port for connection to a communications system. The function of a DTDM is similar to that of a processor data module (PDM) and modular processor data module (MPDM) in that it converts RS232C signals to DCP signals.

digital-to-analog converter
A device that converts data in digital form to the corresponding analog signals. See also **analog-to-digital converter**.

digital transmission
A mode of transmission in which the information to be transmitted is first converted to digital form and then transmitted as a serial stream of pulses.

digital trunk
A circuit in that carries digital voice and/or digital data in a telecommunications channel.

Direct Extension Selection (DXS)
A feature on an attendant console that allows an attendant direct access to voice terminals by pressing a group select button and a DXS button.

Direct Inward Dialing (DID)
A feature that allows an incoming call from the public network (not FX or WATS) to reach a specific telephone without attendant assistance. DID calls to DID-restricted telephone lines are routed to an attendant or recorded announcement, depending on the option selected.

direct inward dialing (DID) trunk
An incoming trunk used for dialing directly from the public network into a communications system without help from the attendant.

disk drive
A mechanical device that stores data on and retrieves data from one or more disks.

distributed communications system (DCS)
A network configuration linking two or more communications systems in such a way that selected features appear to operate as if the network were one system.

duplicated common control
Two processors ensuring continuous operation of a communications system. While one processor is on-line, the other functions as a backup. The backup processor goes on-line periodically or when a problem condition occurs.

duplication
The use of redundant components to improve availability. When a duplicated subsystem fails, its backup redundant system automatically takes over.

duplication option
A system option (either high or critical reliability) that duplicates part or all of the following:

- Control carrier, which contains the switch processing element (SPE)
- Expansion interface (EI) circuit packs in carriers
- Fiber-optic cabling between port networks (PNs)
- Center-stage switch (CSS) in a CSS-connected system

E

ear and mouth (E&M) signaling
Trunk supervisory signaling, used between two communications systems, whereby signaling information is transferred through two-state voltage conditions (on the E and M leads) for analog applications and through a single bit for digital applications.

Electronics Industries Association (EIA)
A trade association of the electronics industry that establishes electrical and functional standards.

electronic tandem network (ETN)
A tandem tie trunk network that has automatic call routing capabilities based on the number dialed and the most preferred route available at the time the call is placed. Each switch in the network is assigned a unique private network office code (RNX), and each voice terminal is assigned a unique extension number.

emergency transfer
If a major system failure occurs, the automatic transfer within a communications system of a predefined set of central office (CO) lines to a group of answering telephones with at least one telephone capable of making outgoing calls. The system operates in this mode until the failure is repaired and the system automatically returns to normal operation. Also called ''power-failure transfer.''

end-to-end signaling
The transmission of touch-tone signals generated by dialing from a voice terminal user to remote computer equipment. A connection must first be established over an outgoing trunk from the calling party to the computer equipment. Then additional digits can be dialed to transmit information to be processed by the computer equipment.

Enhanced Private Switched Communications Service (EPSCS)
An analog private telecommunications network based on the No. 5 Crossbar and 1A ESSctl-Y that provides advanced voice and data telecommunications services to companies with many locations.

expansion archangel (EA)
A network-control microprocessor located on an expansion interface (EI) port circuit pack in an expansion port network (EPN). The EA provides an interface between the EPN and its controlling switch processing element (SPE).

expansion-archangel link (EAL)
A link-access function on the D-channel (LAPD) logical link that exists between a switch processing element (SPE) and an expansion archangel (EA). The EAL carries control messages from the SPE to the EA and to port circuit packs in an expansion port network (EPN).

expansion control cabinet
See **expansion control carrier**.

expansion control carrier
A carrier in a multicarrier cabinet that contains extra port circuit packs and a maintenance interface. Also called ''expansion control cabinet'' in a single-carrier cabinet.

expansion interface (EI)
A port circuit pack in a port network (PN) that provides the interface between a PN's time-division multiplex (TDM) bus and packet bus, and a fiber-optic link. The EI carries circuit-switched data, packet-switched data, network control, timing control, and DS1 control. In addition, an EI in an

expansion port network (EPN) communicates with the master maintenance circuit pack to provide the EPN's environmental and alarm status to the switch processing element (SPE).

expansion port network (EPN)
A port network (PN) that is connected to the TDM bus and packet bus of a processor port network (PPN). Control is achieved by indirect connection of the EPN to the PPN via a port-network link (PNL). See also **port network**.

extension number
A 1- to 5-digit number by which calls are routed through a communications system or, with a Uniform Dial Plan (UDP) or main-satellite dialing plan, through a private network. Extension numbers are primarily used for telephones and data terminals but can also be used with specific features.

external call
A connection between a communications system user and a party on the public network or on another communications system in a private network.

F

facility
A general term used for a telecommunications transmission pathway and associated equipment.

feature
A specifically defined function or service provided by the system.

feature button
A labeled button on a telephone or attendant console used to access a specific feature.

fiber optics
A technology using materials that transmit ultrawideband electromagnetic light-frequency ranges for high-capacity carrier systems.

foreign exchange (FX)
A central office (CO) other than the one providing local access to the public telephone network.

foreign exchange trunk
A telecommunications channel that directly connects the system to a central office (CO) other than its local CO.

foreign numbering-plan area code (FNPAC)
An area code other than the local area code. The FNPAC must be dialed to call outside the local geographical area.

G

ground-start trunk
A trunk on which, for outgoing calls, the system transmits a request for services to a distant switching system by grounding the trunk ring lead. To receive the digits of the called number, that system grounds the trunk tip lead. When the system detects this ground, the digits are sent.

H

handshaking logic
A format used to initiate a data connection between two data module devices.

Hertz (Hz)
A unit of frequency equal to one cycle per second.

high-reliability system
A system having the following: two control carriers, duplicate expansion interface (EI) circuit packs in the PPN, and (in G3r with CSS) duplicate switch node clock circuit packs in the switch node (SN) carriers. See also **duplicated common control**, **duplication**, **duplication option**, and **critical-reliability system**.

home numbering-plan area code
The local area code. The area code does not have to be dialed to call numbers within the local geographical area.

hop
Nondirect communication between two switch communications interfaces (SCIs) whereby the SCI message passes automatically without intermediate processing through one or more intermediate SCIs.

host computer
A computer, connected to a network, that processes data from dataentry devices.

hunt group
A group of extensions that are assigned the Station Hunting feature so that a call to a busy extension will reroute to an idle extension in the group.

I

immediate-start tie trunk
A trunk on which, after making a connection with a distant switching system for an outgoing call, the system waits a nominal 65 ms before sending the digits of the called number. This allows time for the distant system to prepare to receive digits. On an incoming call, the system has less than 65 ms to prepare to receive the digits.

information exchange
The exchange of data between users of two different systems (such as DEFINITY G1 or DEFINITY G3 and a host computer) over a local area network (LAN).

Information Systems Network (ISN)
A wide area network (WAN) and local area network (LAN) with an open architecture combining host computers, minicomputers, word processors, storage devices, PCs, high-speed printers, and nonintelligent terminals into a single packet-switching system.

inside call
A call placed from one telephone to another within the local communications system.

Integrated Services Digital Network (ISDN)
A public or private network that provides end-to-end digital communications for all services to which users have access by a limited set of standard multipurpose user-network interfaces

defined by the CCITT. Through internationally accepted standard interfaces, ISDN provides digital circuit-switched or packet-switched communications within the network and links to other ISDNs to provide national and international digital communications. See also **Integrated Services Digital Network Basic Rate Interface** and **Integrated Services Digital Network Primary Rate Interface**.

Integrated Services Digital Network Basic Rate Interface (ISDN-BRI)
The interface between a communications system and terminal that includes two 64-kbps B-channels for transmitting voice or data and one 16-kbps D-channel for transmitting associated B-channel call control and out-of-band signaling information ctl-W an arrangement called ''2B+1D.'' ISDN-BRI also includes 48 kbps for transmitting framing and D-channel contention information, for a total interface speed of 192 kbps. ISDN-BRI serves ISDN terminals and digital terminals fitted with ISDN terminal adapters. See also **Integrated Services Digital Network Primary Rate Interface**.

Integrated Services Digital Network Primary Rate Interface (ISDN-PRI)
The interface between multiple communications systems that in North America includes 24 64-kbps channels, corresponding to the North American digital signal level-1 (DS1) standard rate of 1.544 Mbytes per second.

The most common arrangement of channels in ISDN-PRI is 23 64-kbps B-channels for transmitting voice and data and 1 64-kbps D-channel for transmitting associated B-channel call control and out-of-band signaling information ctl-W an arrangement called ''23B+1D,'' although with non-facility-associated signaling (NFAS) ISDN-PRI can include 24 B-channels and no D-channel. See also **Integrated Services Digital Network** and **Integrated Services Digital Network Basic Rate Interface**.

intercept tone
An alternating high and low tone that indicates a dialing error or denial of the service requested.

interface
A common boundary between two systems or pieces of equipment.

internal call
A connection between two users within a system.

International Telegraph and Telephone Consultative Committee
See **CCITT**.

in-use lamp
A red light on a multiappearance voice terminal that is illuminated to show which call appearance will be selected when the handset is lifted or which call appearance is active when a user is off-hook.

ISDN Gateway (IG)
A feature allowing integration of DEFINITY Generic 1 and Generic 3 and a host-based telemarketing application via a link to a gateway adjunct. The gateway adjunct is a 3B-based product that notifies the host-based telemarketing application of call events.

ISDN trunk
A trunk administered for use with Integrated Services Digital Network primary rate interface (ISDN-PRI). Also called ''ISDN facility.''

L

light-emitting diode (LED)
A semiconductor device that produces light when voltage is applied. LEDs provide a visual indication of the operational status of hardware components, the results of maintenance tests, and the alarm status of circuit packs, and the activation of telephone features.

lightwave transceiver
Hardware that provides an interface to fiber-optic cable from port circuit packs and digital signal level-1 (DS1) converter circuit packs. Lightwave transceivers convert electrical signals to light signals and vice versa.

line
A transmission path between a communications system or central office (CO) switching system and a voice terminal or other terminal.

line port
The hardware that provides the access point to a communications system for each circuit associated with a telephone and/or data terminal.

link
A transmitter-receiver channel that connects two systems.

link-access procedure on the D-channel (LAPD)
A link-layer protocol on the Integrated Services Digital Network basic rate interface (ISDN-BRI) and primary rate interface (ISDN-PRI) data-link layer (level 2). LAPD provides data transfer between two devices, and error and flow control on multiple logical links. LAPD is used for signaling and low-speed packet data (X.25 and mode 3) on the signaling (D-) channel and for mode-3 data communications on a bearer (B-) channel.

local area network (LAN)
A networking arrangement designed for a limited geographical area. Generally, a LAN is limited in range to a maximum of 6.2 miles and provides high-speed carrier service with low error rates. Common configurations include daisy chain, star (including circuit-switched), ring, and bus.

logical link
The communications path between a processor and a basic rate interface (BRI) terminal.

loop-start trunk
A trunk on which, after establishing a connection with a distant switching system for an outgoing call, the system waits for a signal on the loop formed by the trunk leads before sending the digits of the called number.

M

Mu-law companding
A logarithmic companding algorithm commonly used in North America and Japan. Compared to A-law companding, Mu-law companding uses more of the 255 available quantizing levels to minimize quantizing noise at lower volumes, providing higher apparent fidelity at lower volumes and lower apparent fidelity at higher volumes. See also **companding** and **A-law companding**.

main/satellite/tributary
A private network configuration that can either stand alone or access an electronic tandem network (ETN). A ''main'' switch provides interconnection, via tie trunks, with one or more subtending switches, called ''satellites;'' all attendant positions for the main/satellite configuration; and access to and from the public network. To a user outside the complex, a main/satellite configuration appears as one switch, with one listed directory number (LDN). A ''tributary'' switch is connected to the main switch via tie trunks, but which has its own attendant positions and LDN.

maintenance
The activities involved in keeping a telecommunications system in proper working condition: the detection and isolation of software and hardware faults, and automatic and manual recovery from these faults.

major alarm
An indication of a failure that has caused critical degradation of service and requires immediate attention. Major alarms are automatically displayed on LEDs on the attendant console and maintenance or alarming circuit pack, logged to the alarm log, and reported to a remote maintenance facility, if applicable.

memory
A device into which information can be copied and held, and from which the information can be obtained at a later time.

message center
An answering service that supplies agents to and stores messages for later retrieval.

message center agent
A member of a message center hunt group who takes and retrieves messages for voice terminal users.

minor alarm
An indication of a failure that could affect customer service. Minor alarms are automatically displayed on LEDs on the attendant console and maintenance or alarming circuit pack, sent to the alarm log, and reported to a remote maintenance facility, if applicable.

modem
A device that converts digital data signals to analog signals for transmission over telephone circuits. The analog signals are converted back to the original digital data signals by another modem at the other end of the circuit.

modem pooling
A capability that provides shared conversion resources (modems and data modules) for cost-effective access to analog facilities by data terminals. When needed, modem pooling inserts a conversion resource into the path of a data call. Modem pooling serves both outgoing and incoming calls.

modular processor data module (MPDM)
A processor data module (PDM) that can be configured to provide several kinds of interfaces (RS232C, RS449, and V.35) to customer-provided data terminal equipment (DTE). See also **processor data module**.

modular trunk data module (MTDM)
A trunk data module (TDM) that can be configured to provide several kinds of interfaces (RS232C, RS449, and V.35) to customer-provided data terminal equipment (DTE).

modulator/demodulator
See **modem**.

multiappearance voice terminal
A terminal equipped with several call appearance buttons for the same extension number, allowing the user to handle more than one call, on that same extension number, at the same time.

multicarrier cabinet
A structure that holds one to five carriers. See also **single-carrier cabinet**.

multifrequency-compelled (MFC), release 2 (R2) DID signalling
A signal consisting of two frequency components, such that when a signal is transmitted from a switch, another signal acknowledging the transmitted signal is received by the switch. ''R2'' designates signaling used in the USA and countries outside the USA, and ''R1'' (for no compelled signaling) designates signaling used only in countries outside the USA.

multiplexer
A device used to combine a number of individual channels into a single common bit stream for transmission.

multiplexing
A process whereby a transmission facility is divided into two or more channels, either by splitting the frequency band into a number of narrower bands or by dividing the transmission channel into successive time slots. See also **time-division multiplexing**.

N

network
A series of points, nodes, or stations connected by communications channels.

network interface
A common boundary between two systems in an interconnected group of systems.

node
A switching or control point for a network. Nodes are either ''tandem'' ctl-W they receive signals and pass them on ctl-W or ''terminal'' ctl-W they originate or terminate a transmission path.

P

packet
A group of bits ctl-W including a message element, which is the data, and a control information element (IE), which is the header ctl-W used in packet switching and transmitted as a discrete unit. In each packet, the message element and control IE are arranged in a specified format. See also **packet bus** and **packet switching**.

packet bus
A wide-bandwidth bus that transmits packets.

packet switching
A data-transmission technique whereby user information is segmented and routed in discrete data envelopes called ''packets,'' each with its own appended control information, for routing, sequencing, and error checking. Packet switching allows a channel to be occupied only during the transmission of a packet; on completion of the transmission, the channel is made available for the transfer of other packets. See also **BX.25** and **packet**.

paging trunk
A telecommunications channel used to access an amplifier for loudspeaker paging.

periodic pulse metering (PPM)
For public-network toll calls, an intermittent tone sent to the calling party indicating the current demand for toll facilities. When the time interval between pulses (tones) is long, current demand and the resulting toll charges are low; when the interval is short, current demand and the resulting charges are high.

personal computer (PC)
A personally controllable microcomputer.

pickup group
A group of individuals authorized to answer any call directed to an extension number within the group.

port
A data- or voice-transmission access point on a device that is used for communicating with other devices.

port carrier
A carrier in a multicarrier cabinet or a single-carrier cabinet containing port circuit packs, power units, and service circuits. Also called a ''port cabinet'' in a single carrier cabinet.

port network (PN)
A cabinet containing a TDM bus and packet bus to which the following components are connected: port circuit packs, one or two tone-clock circuit packs, a maintenance circuit pack, service circuit packs, and (optionally) up to four expansion interface (EI) circuit packs in G3. Each PN is controlled either locally or remotely by a switch processing element (SPE). See also **expansion port network** and **processor port network**.

port-network connectivity
The interconnection of port networks (PNs), regardless of whether the configuration uses direct or switched connectivity.

Primary Rate Interface (PRI)
A standard Integrated Services Digital Network (ISDN) frame format that specifies the protocol used between two or more communications systems. PRI runs at 1.544 Mbps and, as used in North America, provides 23 64-kbps B channels (voice or data) and one 64-kbps D channel (signaling). The D channel is the 24th channel of the interface and contains multiplexed signaling information for the other 23 channels.

principal (user)
A person to whom a telephone is assigned and who has message center coverage.

private network
A network used exclusively for the telecommunications needs of a particular customer.

private network office code (RNX)
The first three digits of a 7-digit private network number. These codes are numbered 220 through 999, excluding any codes that have a 0 or 1 as the second digit.

processor carrier
A phrase used for ''control carrier'' in DEFINITY G3r. See also **control carrier**.

processor data module (PDM)
A device that provides an RS232C data circuit-terminating equipment (DCE) interface for connecting to data terminals, applications processors (APs), and host computers and provides a Dig-

ital Communications Protocol (DCP) interface for connection to a communications system. See also **modular processor data module**.

processor port network (PPN)
A port network (PN) controlled by a switch processing element (SPE) that is directly connected to that PN's time-division multiplex (TDM) bus and local area network (LAN) bus. See also **port network**.

processor port network (PPN) control carrier
A carrier containing the maintenance circuit pack, tone/clock circuit pack, and switch processing element (SPE) circuit packs for a processor port network (PPN) and, optionally, port circuit packs.

Property Management System (PMS)
A stand-alone computer used by lodging and health services organizations use for services such as reservations, housekeeping, and billing.

protocol
A set of conventions or rules governing the format and timing of message exchanges to control data movement and correction of errors.

public network
The network that can be openly accessed by all customers for local or long-distance calling.

pulse-code modulation (PCM)
An extension of pulse-amplitude modulation (PAM) in which carrier-signal pulses modulated by an analog signal, such as speech, are quantized and encoded to a digital, usually binary, format.

Q

queue
An ordered sequence of calls waiting to be processed.

queuing
The process of holding calls in order of their arrival to await connection to an attendant, to an answering group, or to an idle trunk. Calls are automatically connected in first-in, first-out sequence.

R

random access memory (RAM)
A storage arrangement whereby information can be retrieved at a speed independent of the location of the stored information.

read-only memory (ROM)
A storage arrangement primarily for information retrieval applications.

recall dial tone
Three short bursts of tone followed by steady dial tone signalling that the system has completed a function (such as holding a call) and is ready to accept dialing.

redirection criteria
The information administered for each voice terminal's coverage path that determines when an incoming call is redirected to coverage.

remote home numbering-plan area code (RHNPA)
A foreign numbering-plan area code that is treated as a home area code by the Automatic Route Selection (ARS) feature. Calls can be allowed or denied based on the area code and the dialed central office (CO) code rather than just the area code. If the call is allowed, the ARS pattern used for the call is determined by these six digits.

removable mass storage subsystem (RMSS)
A tape storage device that stores the software information for the system.

reorder tone
A fast-busy tone repeated 120 times a minute to signal that at least one of the facilities, such as a trunk or a digit transmitter, needed for the call was not available at the time the call was placed.

RS232C
A physical interface specified by the EIA. RS232C transmits and receives asynchronous data at speeds of up to 19.2 kbps over cable distances of up to 50 feet.

S

sanity-and-control interface (SAKI)
A custom, very-large-scale-integration (VLSI) microchip located on each port circuit pack. The SAKI provides address recognition, buffering, and synchronization between the angel and the five control time slots that make up the control channel. The SAKI also scans and collects status information for the angel on its port circuit pack and, when polled, transmits this information to the archangel.

simplex system
A system that has no redundant hardware.

single-carrier cabinet
A combined cabinet and carrier unit that contains one carrier. See also **multicarrier cabinet**.

single-line voice terminal
A voice terminal served by a single-line tip and ring circuit (models 500, 2500, 7101A, 7103A).

small computer system interface (SCSI)
An ANSI bus standard that provides a high-level command interface between host computers and peripheral devices.

software
A set of computer programs that do one or more tasks.

split
A condition whereby a caller is temporarily separated from a connection with an attendant. A split condition automatically occurs when the attendant, active on a call, presses the start button.

standard serial interface (SSI)
A communications protocol developed by AT&T Teletype Corporation for use with the 500 business communications terminals (BCTs) and the 400-series printers.

status lamp
A green light that shows the status of a call appearance or a feature button by the state of the light (lit, flashing, fluttering, broken flutter, or unlit).

stroke counts
A method used by Automatic Call Distribution (ACD) agents to record up to nine customer-defined events per call when the Call Management System (CMS) is active.

switch
Any kind of telephone switching system. See also **communications system**.

switchhook
The buttons located under the receiver on a voice terminal.

switch node (SN) carrier
A carrier containing a single switch node, power units, and, optionally, one or two digital signal level-1 (DS1) converter circuit packs. An SN carrier is located in a center stage switch (CSS).

switch node (SN) clock
The circuit pack in a switch node (SN) carrier that provides clock and maintenance alarm functions and environmental monitors for an SN.

switch node interface (SNI)
The basic building block of a switch node. An SNI circuit pack controls the routing of circuit, packet, and control messages.

switch node link (SNL)
The hardware that provides a bridge between two or more switch nodes. The SNL consists of the two switch node interface (SNI) circuit packs residing on the switch nodes and the hardware connecting the SNIs. This hardware can include lightwave transceivers that convert the SNI's electrical signals to light signals, the copper wire that connects the SNIs to the lightwave transceivers, a full-duplex fiber-optic cable, digital signal level-1 (DS1) converter circuit cards and DS1 facilities if a company does not have rights to lay cable, and appropriate connectors.

switch processing element (SPE)
A complex of circuit packs ctl-W processor, memory, disk controller, and bus-interface cards ctl-W mounted in a processor-port-network (PPN) control carrier. The SPE serves as the control element for that PPN and, optionally, for one or more expansion port networks (EPNs).

synchronous data transmission
A method of sending data in which discrete signal elements are sent at a fixed and continuous rate and specified times.

system manager
A person responsible for specifying and administering features and services for a system.

system reload
A process that allows stored data to be written from a tape into the system memory (normally after a power outage).

T

tandem switch
A switch within an electronic tandem network (ETN) that provides the logic to determine the best route for a network call, possibly modifies the digits outpulsed, and allows or denies certain calls to certain users.

tandem through
The switched connection of an incoming trunk to an outgoing trunk without human intervention.

tandem tie-trunk network
A private network that interconnects several customer switching systems by dial-repeating tie trunks. Access to the various systems is dictated by codes that must be individually dialed for each system.

terminal
A device that sends and receives data within a system. See also **administration terminal**.

tie trunk
A telecommunications channel that directly connects two private switching systems.

time-division multiplex (TDM) bus
A bus that is time-shared regularly by preallocating short time slots to each transmitter. In a PBX, all port circuits are connected to the TDM bus, permitting any port to send a signal to any other port.

time-division multiplexing (TDM)
Multiplexing that divides a transmission channel into successive time slots. See also **multiplexing**.

tone ringer
A device with a speaker, used in electronic voice terminals to alert the user.

trunk
A dedicated telecommunications channel between two communications systems or central offices (COs).

trunk data module
A device that provides the interface for connection between off-premises private-line trunk facilities and a DEFINITY Generic 1 or DEFINITY Generic 3. The trunk data module provides conversion between the RS232C and the Digital Communications Protocol (DCP), and can connect to direct distance dialing (DDD) modems as the DCP member of a modem pool.

trunk group
Telecommunications channels assigned as a group for certain functions that can be used interchangeably between two communications systems or central offices (COs).

U

Uniform Dial Plan
A feature that allows a unique 4- or 5-digit number assignment for each terminal in a multiswitch configuration such as a distributed communications system (DCS) or main-satellite-tributary configuration.

V

voice terminal
A single-line or multiappearance telephone.

W

Wide Area Telecommunications Service (WATS)
A service that allows calls to a certain area or areas for a flat-rate charge based on expected usage.

wink-start tie trunk
A trunk with which, after making a connection with a distant switching system for an outgoing call, the system waits for a momentary signal (wink) before sending the digits of the called number. Similarly, on an incoming call, the system sends the wink signal when ready to receive digits.

write operation
The process of putting information onto a storage medium such as magnetic tape.

Index

Numerics

176A Apparatus Blank, 2-16
4B Cable Retainer, 2-21
4-Cabinet G3r V2 E, 1-22, 5-22, 7-22
603A, 603D, and 603E CallMaster, 10-181
631-Type Power Unit
  G2 Multicarrier, 6-24, 6-64, 6-107
  R1V3 Small, 3-24, 3-59
715 BCS Terminal, 10-166
715 GBCS Terminal, 10-166
715 GBCS-2 Terminal, 10-166
7505, 7506, 7507 Voice Terminal, 10-165
8400-Series Voice Terminals, 10-177
8503T Voice Terminal, 10-165

A

A minor alarm, 10-234
AC/DC-Powered Multicarrier Cabinet Configuration
  G1 or G3i Single-Carrier, 5-4
  R1V3 Medium, 2-4
  R1V3 Single-Carrier, 1-4
  R1V3 Small, 3-4
Acceptance Tests
  G1 or G3i Multicarrier, 4-50, 4-92, 4-141
  G1 or G3i Single-Carrier, 5-90
  G2 Multicarrier, 6-49, 6-90, 6-138
  G2 Single-Carrier Cabinet, 7-89
  R1V3 Medium, 2-44, 2-79, 2-117
  R1V3 Single-Carrier, 1-59
  R1V3 Small, 3-43, 3-78, 3-117
AC-Powered Cabinet, R1V3 Medium, 2-5
AC-Powered Expansion Control Carrier, 2-22
Added Translations, 10-34, 10-70, 10-107, 10-144, 10-145, 10-147, 10-155, 10-157, 10-158, 10-161, 10-163
Additions
  603A, 603D, and 603E, 10-181
  8400-Series Sets, 10-177
  CallMaster, 10-181
  G3r V3, 10-1
  Integrated, 10-193
  PassageWay Solution, 10-196
  Third Switch Node, 10-171
  TN1650B Memory Circuit Pack, 10-183
  Twentythird Port Network, 10-171
Address Plugs
  G1 or G3i Single-Carrier, 5-25
  G2 Single-Carrier Cabinet, 7-25
Administration Forms for G3r V2, 1-7, 4-7, 5-7
AHF3 Cable Adapter, 2-52
AHF4 Cable Adapter, 2-16, 2-17
Alarm Connections
  G2 Multicarrier, 6-6
  G2 Single-Carrier Cabinet, 7-6
  R1V3 Medium, 2-8
  R1V3 Single-Carrier, 1-8
  R1V3 Small, 3-7
Alarm, Add Customer-Provided, 10-156
Angle, Front Mounting
  G2 Single-Carrier Cabinet, 7-20
  R1V3 Single-Carrier, 1-20
Announcement Rerecording
  G1 or G3i Multicarrier to G3r V2, 4-50, 4-92, 4-141
  G1 or G3i Single-Carrier to G3r V2, 5-90
  R1V3 Medium to G3r V2, 2-44, 2-79, 2-117
  R1V3 Single-Carrier to G3r V2, 1-59
  R1V3 Small to G3r V2, 3-43, 3-77, 3-117
ARS/AAR Features, 2-6
Auxiliary Cabinet, Adding, 10-14
Auxiliary Connector
  Pinouts on G3r V2 System, 6-8, 7-8
  R1V3 Medium, 2-8
  R1V3 Single-Carrier, 1-8
  R1V3 Small, 3-7
Auxiliary Power
  302B1 Console, 10-174
  8434 Voice Terminal, 10-178
  PassageWay Adaptor, 10-197

B

B25A Cable, 2-38
Battery
  G1 or G3i Single-Carrier, 5-87
  G2 Single-Carrier Cabinet, 7-87
  R1V3 Single-Carrier, 1-47, 1-56
Battery Holdover, Nominal
  302B1 Console, 10-174
Bridging, Hard-Wire
  302B1 Attendant Console, 10-173
  8400-Series Set, 10-177
  CallMaster 603A, 603D, or 603E, 10-181
Bus Terminators, 2-25, 2-59

C

Cabinet Address Plugs
  G1 or G3i Single-Carrier, 5-25
  G2 Single-Carrier Cabinet, 7-25
Cabinet Clips
  R1V3 Single-Carrier, 1-47
  Systems Without Earthquake Protection, 10-29
Cabinet Concrete Floor, 7-20
Cabinet Earthquake Mounting, Concrete Floor, 7-20
Cabinet Upgrade

G1 or G3i Multicarrier, 4-10, 4-51, 4-93
G2 Multicarrier, 6-11, 6-51, 6-91
R1V3 Medium, 2-11, 2-45, 2-80
R1V3 Single-Carrier, 1-11
R1V3 Small, 3-10, 3-44, 3-79
Cabinet-Address Plugs, Installing, 10-26
Cabinets
DS1C-Remoted, G1 or G3i Multicarrier, 4-40, 4-82, 4-130
DS1C-Remoted, G1 or G3i Single-Carrier, 5-74
DS1C-Remoted, G2 Multicarrier, 6-40, 6-80, 6-128
DS1C-Remoted, G2 Single-Carrier Cabinet, 7-73
DS1C-Remoted, R1V3 Medium, 2-68, 2-107
DS1C-Remoted, R1V3 Single-Carrier, 1-42
DS1C-Remoted, R1V3 Small, 3-31, 3-66, 3-107
R1V3 System, 3-49, 3-84
Cable Adapters, 2-17, 2-52
Cable Clamps
G1 or G3i Single-Carrier, 5-88
G2 Single-Carrier Cabinet, 7-88
Install, 10-32
R1V3 Single-Carrier, 1-58
Cable Connections
Intercabinet, 10-24
Intercabinet, G1 or G3i Single-Carrier, 5-27
Intercabinet, G2 Single-Carrier Cabinet, 7-26
Intercarrier, G2 Multicarrier, 6-105
Intercarrier, R1V3 Medium, 2-97
Intercarrier, R1V3 Small, 3-93
Cables
Connect, 10-24
Install, 10-32, 10-106, 10-144, 10-145, 10-147, 10-155, 10-158, 10-161, 10-163
Label, Control Carrier, 10-35
Label, G1 or G3i Multicarrier, 4-13, 4-53, 4-97
Label, G1 or G3i Single-Carrier, 5-14
Label, G2 Multicarrier, 6-14, 6-53, 6-93
Label, G2 Single-Carrier Cabinet, 7-14
Label, R1V3 Medium, 2-14, 2-48, 2-83
Label, R1V3 Single-Carrier, 1-14
Label, R1V3 Small, 3-13, 3-47, 3-81
Cables, Disconnect, R1V3 Single-Carrier, 1-17
Cabling
Local Port Networks, G1 or G3i Multicarrier, 4-41, 4-83, 4-131
Local Port Networks, G1 or G3i Single-Carrier, 5-75
Local Port Networks, G2 Multicarrier, 6-41, 6-81, 6-129
Local Port Networks, G2 Single-Carrier Cabinet, 7-74
Local Port Networks, R1V3 Medium, 2-34, 2-69, 2-108
Local Port Networks, R1V3 Single-Carrier, 1-43
Local Port Networks, R1V3 Small, 3-32, 3-67, 3-108
Public Network, G1 or G3i Multicarrier, 4-42, 4-84, 4-133
Public Network, G1 or G3i Single-Carrier, 5-76
Public Network, G2 Multicarrier, 6-41, 6-81, 6-129
Public Network, G2 Single-Carrier Cabinet, 7-74
Public Network, R1V3 Medium, 2-35, 2-71, 2-109
Public Network, R1V3 Single-Carrier, 1-45
Public Network, R1V3 Small, 3-35, 3-70, 3-109
CallMaster, 10-181
CDRU/CAS+ Connections, 2-73, 2-111, 3-37, 3-72, 3-111, 4-135, 5-81, 6-44, 6-84, 6-132, 7-80
Center Stage Switch
Fiber-Optic Connections, 5-71, 5-73, 6-79, 6-126, 7-67, 7-70, 7-72
CFY1 Current Limiter (CURL), 1-26, 2-21, 5-27, 7-26
change system-parameters customer-options command, 9-18
Changed/New Administration Forms for G3r V2, 1-7, 2-7, 3-7, 4-7, 5-7
Changes to Upgrade Procedures
G3r V2, 9-3
Channel Service Units, 2-35
Circuit Packs
Add, 10-79
G3r V2 Expansion Control Cabinet, 1-23, 5-23, 7-23
G3r V2 Expansion Control Carrier, 2-28, 2-62, 2-101, 3-25, 3-60, 3-98, 4-68, 6-25, 6-65
Install, 10-62
R1V3 Single-Carrier, 1-3
Remove, G2 Single-Carrier Cabinet, 7-16
circuit packs
sorted by code, 11-1
TN750 announcement, 10-129
TN750B announcement, 10-129
TN750C multiple integrated announcement, 10-129
Circuit Packs in DEFINITY, 11-1
Circuit-Pack Vintages
G1 or G3i Multicarrier, 4-3, 4-44, 4-86, 4-135
G1 or G3i Single-Carrier, 5-3, 5-80
G2 Multicarrier, 6-2, 6-44, 6-84, 6-132
G2 Single-Carrier Cabinet, 7-2, 7-79
G3r V1, 8-2
G3r V2, 9-3
R1V3 Medium, 2-4, 2-38, 2-73, 2-111
R1V3 Single-Carrier, 1-4, 1-49
R1V3 Small, 3-4, 3-37, 3-72, 3-111
Clock Unit, 10-160
Code Calling Access, 10-109
Collocated Cabinets, Fiber-Optic Connections, 2-31, 3-29
Collocated Expansion Port Networks
G1 or G3i Multicarrier, 4-29
Collocated Fiber-Optic Connections, 4-32
Collocated Port Networks
G1 or G3i Multicarrier, 4-27, 4-68, 4-113
G1 or G3i Single-Carrier, 5-30, 5-41, 5-52
G2 Multicarrier, 6-26, 6-66, 6-110
G2 Single-Carrier Cabinet, 7-29, 7-40, 7-52
R1V3 Medium, 2-29, 2-64, 2-102
R1V3 Small, 3-27, 3-62, 3-99
Communication Between Equipment Rooms
G1 or G3i Multicarrier, 4-2
G1 or G3i Single-Carrier, 5-2
G2 Multicarrier, 6-2
G2 Single-Carrier Cabinet, 7-2
R1V3 Single-Carrier, 1-3
R1V3 Small, 3-3
Concrete Floor
Cabinet Earthquake Mounting, 7-20

Front Mounting Angle, 1-20, 7-20
Connect, 10-24, 10-32, 10-33
Connections, 2-73, 2-111, 3-37, 3-72, 3-111, 4-31, 4-32, 4-36, 4-37, 4-72, 4-73, 4-78, 4-135, 5-81, 6-44, 6-84, 6-132, 7-80
CDRU/CAS+, 2-73, 2-111, 3-37, 3-111, 4-135, 5-81, 6-44, 6-84, 6-132, 7-80
CDRU/CAS+,, 3-72
Expansion Control Carrier, G2 Multicarrier, 6-105
Expansion Control Carrier, R1V3 Medium, 2-97
Intercabinet Cable, R1V3 Single-Carrier, 1-26
Intercarrier Cable, R1V3 Small, 3-93
Port Carrier, G1 or G3i Multicarrier, 4-109
Port Carrier, G2 Multicarrier, 6-105
Port Carrier, R1V3 Small, 3-94
R1V3 Small, 3-17, 3-51
R1V3 System, 2-52, 2-88
Small R1V3, 3-86
Connectivity Between Remote, 1-45, 2-36, 2-71, 2-109, 3-35, 3-70, 3-109, 5-76, 6-42, 6-82, 6-130, 7-75
Contact Network Technicians
G1 or G3i Multicarrier, 4-2
G1 or G3i Single-Carrier, 5-2
G2 Multicarrier, 6-2
G2 Single-Carrier Cabinet, 7-2
R1V3 Medium, 2-3
R1V3 Single-Carrier, 1-3
R1V3 Small, 3-3
Control Cabinet, Remove Existing, G1 or G3i Single-Carrier, 5-17
Control Carrier, Adding, 10-35
Critical Reliability, 1-41, 2-105, 2-106, 3-104
R1V3 Medium to 2-Cabinet G3r V2, 2-80
R1V3 Single-Carrier, 1-30
R1V3 Small to G3r V2 E, 3-79
Critical-Reliability, 5-72, 7-71
Duplicated G1 or G3i to G3r V2, 4-93
G2 to G3r V2, 6-91
G3r V2, 7-85
G3r V2 System, Interconnect Port Networks, 5-52
G3r V2 with Two or Three Port Networks, 4-119, 4-126, 5-65, 6-116, 6-122, 7-56, 7-63
G3r V2 with Two Port Networks, 1-38, 2-104, 3-101
G3r V2, Interconnect Port Networks, 7-51
Interconnect Port Networks, 4-113, 6-110
Cross Connect Between TN553 and TN726B
G2 Multicarrier, 6-87
R1V3 Medium, 2-40, 2-76, 2-113
R1V3 Single-Carrier, 1-52
R1V3 Small, 3-114
CURL
R1V3 Medium, 2-55
Remove from Module Control Carrier A, 6-15, 6-55, 6-95
customer-options, changing, 9-18
Customer-Provided Alarm, 10-156

D

D6 Connector, Pinouts on G2 System, 6-7, 7-7
DEFINITY AUDIX System
Adding, 10-149
Reseat, 1-53, 2-41, 2-76, 2-114, 3-40, 3-75, 3-114, 4-47, 4-89, 4-138, 5-84, 10-4, 10-33, 10-65, 10-69, 10-106, 10-161, 10-187
DEFINITY Carrier, P1 and P2 Connectors, 2-22, 2-57, 2-92, 3-56, 3-91
Disconnect, 1-17
Disconnect TDM/LAN Cables
G2 Single-Carrier Cabinet, 7-16
Disk Drive, TN1657
G3r V3 Memory Addition, 10-183
Distributed Communications System Interface, 10-154
Door-Latch Screw for G3r V2 Cabinet, 1-18, 5-18, 7-18
down-sizing, 10-234
DS1C-Remoted Cabinets
G1 or G3i Multicarrier, 4-40, 4-82, 4-130
G1 or G3i Single-Carrier, 5-74
G2 Multicarrier, 6-40, 6-80, 6-128
G2 Single-Carrier Cabinet, 7-73
R1V3 Medium, 2-33, 2-68, 2-107
R1V3 Single-Carrier, 1-42
R1V3 Small, 3-31, 3-66, 3-107
DS1C-Remoted Port Networks
G1 or G3i Multicarrier, 4-29, 4-115
G1 or G3i Single-Carrier, 5-31, 5-43, 5-53
G2 Multicarrier, 6-27, 6-67, 6-112
G2 Single-Carrier Cabinet, 7-31, 7-42, 7-53
R1V3 Medium, 2-30, 2-64, 2-103
R1V3 Small, 3-27, 3-62, 3-100
DS1C-Remoted Port Networksl
G1 or G3i Multicarrier, 4-70
DS1C-to-EI/SNI Cables, Numbers and Lengths, 1-44, 2-35, 2-70, 2-109, 3-34, 3-69, 3-108, 4-41, 4-83, 4-132, 5-75, 6-41, 6-81, 6-129, 7-74
Dual Wiring
2-Wire and 4-Wire Endpoints, 10-173, 10-178, 10-182
Duplicated G1 or G3i to Critical-Reliability G3r V2, 4-93
Duplication, 10-50
PNC, Enable, 10-66

E

Earthquake Front Plate
G1 or G3i Single-Carrier, 5-87
G2 Single-Carrier Cabinet, 7-87
Install, 10-30
R1V3 Single-Carrier, 1-56
Earthquake Mounting, 7-20
Earthquake Protection
G1 or G3i Single-Carrier, 5-19

G2 Single-Carrier Cabinet, 7-19
Install Cabinet Clips on Systems Without, 10-29
R1V3 Single-Carrier, 1-19
Embedded, 10-149
Enable, 10-50
Enable PNC Duplication, 10-66
Endpoint
4 Wire, 10-181
603A, 603D, and 603E, 10-181
CallMaster, 10-181
EPN, removing from system, 10-234
EPN1 Fiber-Optic Connections, 4-31, 4-36, 4-72, 4-78, 4-120, 4-127, 5-34, 5-38, 5-45, 5-49, 5-58, 6-30, 6-35, 6-70, 6-75, 6-116, 6-123, 7-33, 7-37, 7-44, 7-48, 7-57, 7-64
EPN1 to EPN2
Fiber-Optic Connections, 5-35, 5-39, 5-46, 5-50, 5-59, 5-66, 6-31, 6-36, 6-71, 6-76, 6-117, 6-124, 7-34, 7-45, 7-49, 7-58, 7-65
EPN1 to EPN2, G2 Single-Carrier Cabinet, 7-58
EPN2 Collocated Fiber-Optic Connections, 4-32
EPN2 Fiber-Optic Connections, 4-37, 4-73, 4-78, 4-120, 4-127, 5-34, 5-39, 5-45, 5-50, 5-59, 5-66, 6-31, 6-36, 6-71, 6-76, 6-117, 6-124, 7-33, 7-38, 7-44, 7-49, 7-58, 7-65
Existing Control Cabinet
G1 or G3i Single-Carrier, 5-17
R1V3 Single-Carrier, 1-17
Existing Module Control Cabinet
Remove, G2 Single-Carrier Cabinet, 7-17
Expansion Control Cabinet
Circuit-Pack Locations in G3r V2, 1-23, 5-23, 7-23
Expansion Control Carrier, 2-97, 6-105
Circuit-Pack Locations in G3r V2, 2-62, 3-25, 3-60, 3-98, 4-68, 6-25, 6-65
R1V3 Medium, 2-101
Expansion Port Networks
Collocated, G1 or G3i Multicarrier, 4-29
Fiber-Remoted, G1 or G3i Multicarrier, 4-122
Switch-Connected, G1 or G3i Multicarrier, 4-38

F

Fiber-Optic Connections, 1-35, 1-37, 2-66, 2-68, 3-64, 3-66, 4-31, 4-32, 4-36, 4-37, 4-72, 4-73, 4-78, 4-120, 4-127, 5-34, 5-38, 5-39, 5-45, 5-49, 5-50, 5-58, 5-59, 5-66, 6-31, 6-35, 6-36, 6-70, 6-71, 6-75, 6-76, 6-116, 6-117, 6-123, 6-124, 7-33, 7-37, 7-38, 7-44, 7-48, 7-49, 7-57, 7-58, 7-64, 7-65
Center Stage Switch, 5-71, 5-73, 6-79, 6-126, 7-67, 7-70, 7-72
Collocated Cabinets, 2-31, 3-29
EPN1 to EPN2, G1 or G3i Single-Carrier, 5-35, 5-39, 5-46, 5-50, 5-59, 5-66
EPN1 to EPN2, G2 Multicarrier, 6-31, 6-36, 6-71, 6-76, 6-117, 6-124
EPN1 to EPN2, G2 Single-Carrier Cabinet, 7-34, 7-45, 7-49, 7-65
Remote Cabinets, 2-33, 3-31
Fiber-Remoted Expansion Port Networks
G1 or G3i Multicarrier, 4-122
Fiber-Remoted Port Networks
G1 or G3i Multicarrier, 4-28, 4-69, 4-114
G1 or G3i Single-Carrier, 5-31, 5-42, 5-53
G2 Multicarrier, 6-27, 6-67, 6-111
G2 Single-Carrier Cabinet, 7-30, 7-41, 7-52
R1V3 Medium, 2-30, 2-64, 2-102
R1V3 Small, 3-27, 3-62, 3-100
FL2P-P-XX Fiber-Optic Cable, 2-29
Front Door
Remove, G1 or G3i Single-Carrier, 5-18
Remove, G2 Single-Carrier Cabinet, 7-18
Remove, R1V3 Single-Carrier, 1-18
Front Mounting Angle, Concrete Floor, 1-20, 7-20

G

G1 or G3i Equipment, Return Replaced, 4-50, 4-92, 4-141, 5-91
G1 or G3i Single-Carrier
Earthquake Protection, 5-19
G1 or G3i To G3r V2
Single-Carrier Cabinet, 5-10
G1 or G3i to G3r V2
Multicarrier, 4-1
Single-Carrier Cabinet, 5-1
G1 or G3i, Duplicated
Critical-Reliability G3r V2, 4-93
High-Reliability G3r V2, 4-51
G1 or G3i, Unduplicated
Standard-Reliability G3r V2, 4-10
G2 Equipment, Return Replaced, 6-50, 6-90, 6-138, 7-89
G2 Multicarrier, Power Down, 6-94
G2 Single-Carrier Cabinet
Earthquake Protection, 7-19
Ground Plate and Cable Clamps, 7-88
G2 to G3r V2, 7-11
Critical-Reliability, 6-91
High-Reliability, 6-51
Standard-Reliability, 6-11
G2 Universal Module
Multicarrier to G3r V2 E, 6-1
Single-Carrier Cabinet to G3r V2 E, 7-1
TDM/LAN Connections for Standard-Reliability, 6-16
G2, Pinouts for D6 Connector, 6-7, 7-7
G3-MA/MT Connections, 2-73, 2-111, 3-37, 3-72, 3-111, 4-135, 5-81, 6-44, 6-84, 7-80
G3r
Multicarrier Cabinet, 10-1
Single-Carrier Cabinet, 10-1
G3r V1
Usable Circuit-Pack Vintages, 8-2

G3r V1 Equipment, Return Replaced, 8-8
G3r V1 to G3r V1.1, 8-1
G3r V1 to G3r V1.1 or G3r V2, 8-1
G3r V1 to G3r V2, 8-1
G3r V1, Return Replaced, 8-13
G3r V1.1
  Register System, 8-8, 8-13
G3r V2
  Changes to Upgrade Procedures, 9-3
  Pinouts for Auxiliary Connector, 6-8, 7-8
  Register System, 1-59, 2-44, 2-79, 2-117, 3-43, 3-78, 3-117, 4-50, 4-92, 4-141, 5-90, 6-49, 6-90, 6-138, 7-89, 8-8, 8-13
G3r V2 Administration Forms, 1-7, 3-7, 4-7, 5-7
G3r V2 Cabinet, Door-Latch Screw Location, 1-18, 5-18, 7-18
G3r V2 Critical-Reliability, 2-104, 5-52, 6-116, 6-122, 7-51, 7-56, 7-63, 7-85
G3r V2 E, 1-10, 1-22, 1-26, 3-79, 5-22, 6-1, 7-22
G3r V2 Expansion Control Cabinet
  Circuit-Pack Locations, 1-23, 5-23, 7-23
G3r V2 Expansion Control Carrier
  Circuit-Pack Locations, 2-28, 2-62, 3-25, 3-60, 3-98, 4-68, 6-25, 6-65
  R1V3 Medium, 2-101
G3r V2 High-Reliability, 2-65, 4-72, 5-41, 6-70, 6-75, 7-39, 7-43, 7-47, 7-85
G3r V2 Standard-Reliability, 6-30, 6-35, 7-29, 7-32, 7-36, 7-85
G3r V2 to G3r V3, 9-1
G3r V2 Upgrade, Version 3, 1-1, 3-1
G3r V2 with Two or Three Port Networks
  Critical-Reliability, 4-126, 5-65
  High-Reliability, 4-77, 5-44, 5-49
  Standard-Reliability, 4-31, 5-38
G3r V2 with Two Port Networks
  Critical-Reliability, 1-38, 3-101
  High-Reliability, 1-34, 3-63
  Standard-Reliability, 1-31, 2-30, 3-28
G3r V3
  Additions, 10-1
  Register System, 9-14
Ground Plate, 10-27
  G1 or G3i Single-Carrier, 5-87, 5-88
  G2 Single-Carrier Cabinet, 7-87, 7-88
  R1V3 Single-Carrier, 1-47, 1-56, 1-58
Ground Strap
  G1 or G3i Multicarrier, 4-89, 4-138
  G1 or G3i Single-Carrier, 5-84
  G2 Multicarrier, 6-47, 6-87, 6-135
  G2 Single-Carrier Cabinet, 7-84
  R1V3 Medium, 2-76, 2-114
  R1V3 Single-Carrier, 1-53
  R1V3 Small, 3-75, 3-114
Grounding Jumpers
  G2 Multicarrier, 6-17, 6-57, 6-98

H

H-600-348 Cables, 2-30
Hardware
  Perequisite, 2-45
  Prerequisite, 1-12, 2-12, 2-80, 3-11, 3-45, 3-79, 4-11, 4-52, 4-94, 5-12, 6-11, 6-51, 6-91, 7-12
  Required, 1-12, 2-12, 2-46, 2-81, 3-11, 3-45, 3-79, 4-11, 4-52, 4-94, 5-12, 6-12, 6-52, 6-92, 7-12, 8-5, 8-9, 9-6, 9-14
Hard-Wire Bridging
  302B1 Attendant Console, 10-173
  8400-Series Set, 10-177
  CallMaster 603A, 603D, or 603E, 10-181
HCMR Tape Drive, 2-16
High Reliability
  R1V3 Medium to 2-Cabinet G3r V2, 2-45
  R1V3 Single-Carrier, 1-29
  R1V3 Small to G3r V2 E, 3-44
High-Reliability, 5-70, 7-69
  Duplicated G1 or G3i to G3r V2, 4-51
  G2 to G3r V2, 6-51
  G3r V2, 7-85
  G3r V2 System, Interconnect Port Networks, 5-41
  G3r V2 with Two or Three Port Networks, 4-72, 4-77, 5-44, 5-49, 6-70, 6-75, 7-43, 7-47
  G3r V2 with Two Port Networks, 1-34, 2-65, 3-63
  G3r V2, Interconnect Port Networks, 7-39
  Interconnect Port Networks, 4-68, 6-66
Holdover, Nominal Battery
  302B1 Console, 10-174

I

Inside Wiring, xxxix
Install Cabinet-Address Plugs, 10-26
Install Cable Clamps, 10-32
  G1 or G3i Single-Carrier, 5-88
  G2 Single-Carrier Cabinet, 7-88
  R1V3 Single-Carrier, 1-58
Install Cables, 10-32, 10-106, 10-144, 10-145, 10-147, 10-155, 10-158, 10-161, 10-163
Install Circuit Packs, 10-62
Install Ground Plates, 10-27
Install Port Cabinets
  G1 or G3i Single-Carrier, 5-22
  G2 Single-Carrier Cabinet, 7-22
Install Port Carrier, 10-67
Install Port Circuit Packs, 10-32
Install System Access Port
  R1V3 Small, 3-72
Install System Access Ports
  G1 or G3i Multicarrier, 4-44, 4-86, 4-135
  G1 or G3i Single-Carrier, 5-80

G2 Multicarrier, 6-44, 6-84, 6-132
G2 Single-Carrier Cabinet, 7-79
R1V3 Medium, 2-38, 2-73, 2-111
R1V3 Single-Carrier, 1-49
R1V3 Small, 3-37, 3-111
Installation
Call Detail Recording Interface, 10-139
Code Calling Access, 10-109
Loudspeaker Paging With Background Music, 10-117
Integrated, 10-193
Intercabinet Cable Connections, 10-24
G1 or G3i Single-Carrier, 5-27
G2 Single-Carrier Cabinet, 7-26
R1V3 Single-Carrier, 1-26
Intercarrier Cable Connections
G2 Multicarrier, 6-105
R1V3 Medium, 2-97
R1V3 Small, 3-93
Interconnect Port Network
R1V3 Small, 3-61
Interconnect Port Networks
Critical-Reliability, 4-113, 5-52, 6-110, 7-51
High-Reliability, 4-68, 5-41, 6-66, 7-39
R1V3 Medium, 2-28, 2-63, 2-101
R1V3 Single-Carrier, 1-29
R1V3 Small, 3-26, 3-99
Standard-Reliability, 4-27, 5-30, 6-26, 7-29
Interface, 10-154
Introduction, xxxix
ISDN Gateway, 4-6, 5-6
Isolator
1 or G3i Multicarrier, 4-5
G1 or G3i Single-Carrier, 5-5
G2 Multicarrier, 6-5
G2 Single-Carrier Cabinet, 7-5
R1V3 Single-Carrier, 1-6
R1V3 Small, 3-6

J

J58890AF-1 Expansion Control Carrier, 2-22
J58890H-1 Port Cabinet, 1-28, 7-28
J58890H-1 Port Cabinet,, 5-29

L

Label Cables
Control Carrier, 10-35
G1 or G3i Multicarrier, 4-13, 4-53, 4-97
G1 or G3i Single-Carrier, 5-14
G2 Multicarrier, 6-14, 6-53, 6-93
G2 Single-Carrier Cabinet, 7-14
R1V3 Medium, 2-14, 2-48, 2-83
R1V3 Single-Carrier, 1-14
R1V3 Small, 3-13, 3-47, 3-81
LAN Gateway, 10-157
Lightwave Tranceiver Connectors, 2-29
Local Port Network, 3-108
Local Port Networks, 1-43, 2-34, 2-69, 2-108, 3-32, 3-67, 4-41, 4-83, 4-131, 5-75, 6-41, 6-81, 6-129, 7-74

M

Maintenance, Preventive, 1-14, 2-14, 2-47, 2-82, 3-12, 3-46, 3-81, 4-12, 4-53, 4-96, 5-14, 6-13, 6-53, 6-93, 7-14
Make Source Tape
G1 or G3i Multicarrier, 4-9
G1 or G3i Single-Carrier, 5-9
G2 Multicarrier, 6-10
G2 Single-Carrier Cabinet, 7-10
R1V3 Single-Carrier, 1-10
R1V3 Small, 3-9
Management Applications, 9-3
Medium-Cabinet R1V3 to G3r V2, 2-1
Memory Circuit Pack
TN1650B, 10-183
Mode 3-to-Mode 2 Conversion, 2-73
Module
Integrated, 10-193
Module Control Cabinet
Remove, G2 Single-Carrier Cabinet, 7-17
Module Control Carrier A
Remove CURL, 6-15, 6-55, 6-95
Multicarrier, 10-3, 10-4
Multicarrier Cabinet, Add G3r, 10-1
Multicarrier G1 or G3i to G3r V2, 4-1
Multicarrier G2 Universal Module to G3r V2 E, 6-1

N

Network Technicians
G1 or G3i Multicarrier, 4-2
G1 or G3i Single-Carrier, 5-2
G2 Multicarrier, 6-2
G2 Single-Carrier Cabinet, 7-2
R1V3 Medium, 2-3
R1V3 Single-Carrier, 1-3
R1V3 Small, 3-3
Nominal Battery Holdover
302B1 Console, 10-174
Numbers and Lengths of DS1C-to-EI/SNI Cables
G1 or G3i Multicarrier, 4-41, 4-83, 4-132
G1 or G3i Single-Carrier, 5-75
G2 Multicarrier, 6-41, 6-81, 6-129
G2 Single-Carrier Cabinet, 7-74
R1V3 Medium, 2-35, 2-70, 2-109
R1V3 Single-Carrier, 1-44
R1V3 Small, 3-34, 3-69, 3-108

O

options, changing, 9-18
OVATION System, 10-169

P

P1 and P2 Connectors
DEFINITY Carrier, 2-57, 2-92, 3-20, 3-56, 3-91
G2 Multicarrier, 6-18, 6-58, 6-99
Location on DEFINITY Carrier, 2-22
PagePac 20, 10-118
PagePac 50/100/200, 10-118
PagePac VS, 10-118
PassageWay Solution, 10-196
Phantom Power
302B1 Console, 10-173
Pin-Field Blocks, 7-28
J58890H-1 Port Cabinet, 1-28, 5-29, 7-28
Pinouts
Auxiliary Connector on G3r V2 System, 6-8
D6 Connector on G2 System, 6-7, 7-7
N553 and TN726B Circuit Packs, 4-88
TN553 and TN726B Circuit Packs, 2-40, 2-75, 2-113, 3-39, 3-74, 3-113, 4-46, 4-137, 5-83, 6-46, 6-86, 6-134, 7-82
PNC Duplication, 10-66
Port Cabinets
Add, Single-Carrier Only, 10-14
G1 or G3i Single-Carrier, 5-22
G2 Single-Carrier Cabinet, 7-22
J58890H-1, 1-28, 5-29, 7-28
Port Carrier, 3-94, 4-109, 6-105
Add (Multicarrier Cabinet Only), 10-66
Install, 10-67
Port Carrier B
Relocate, 10-49
Port Carrier D
Relocate, 10-62
Port Circuit Packs
G1 or G3i Multicarrier, 4-2
G1 or G3i Single-Carrier, 5-2
G2 Multicarrier, 6-2
G2 Single-Carrier Cabinet, 7-2
Install, 10-32
R1V3 Small, 3-3
Port Circuits
R1V3 Single-Carrier, 1-58
R1V3 Small, 3-42, 3-117
Retranslate, G1 or G3i Multicarrier, 4-49, 4-91, 4-140
Retranslate, G1 or G3i Single-Carrier, 5-90
Retranslate, G2 Multicarrier, 6-49, 6-89, 6-137
Retranslate, G2 Single-Carrier Cabinet, 7-88
Retranslate, R1V3 Medium, 2-43, 2-78, 2-116
Retranslate, R1V3 Small, 3-77
Port Network
Interconnect, 1-29
Power Down, 10-67
Port Networks
Collocated, G1 or G3i Multicarrier, 4-27, 4-68, 4-113
Collocated, G1 or G3i Single-Carrier, 5-30, 5-41, 5-52
Collocated, G2 Multicarrier, 6-26, 6-66, 6-110
Collocated, G2 Single-Carrier Cabinet, 7-29, 7-40, 7-52
Collocated, R1V3 Medium, 2-29
Collocated, R1V3 Small, 3-27, 3-62, 3-99
Critical-Reliability G3r V2, 2-104, 3-101, 4-119, 4-126, 5-65, 6-116, 6-122, 7-56, 7-63
DS1C-Remoted, G1 or G3i Multicarrier, 4-29, 4-70, 4-115
DS1C-Remoted, G1 or G3i Single-Carrier, 5-31, 5-43, 5-53
DS1C-Remoted, G2 Multicarrier, 6-27, 6-67, 6-112
DS1C-Remoted, G2 Single-Carrier Cabinet, 7-31, 7-42, 7-53
DS1C-Remoted, R1V3 Medium, 2-30
DS1C-Remoted, R1V3 Small, 3-27, 3-62, 3-100
Fiber-Remoted, G1 or G3i Multicarrier, 4-28, 4-69, 4-114
Fiber-Remoted, G1 or G3i Single-Carrier, 5-31, 5-42, 5-53
Fiber-Remoted, G2 Multicarrier, 6-27, 6-67, 6-111
Fiber-Remoted, G2 Single-Carrier Cabinet, 7-30, 7-41, 7-52
Fiber-Remoted, R1V3 Medium, 2-30
Fiber-Remoted, R1V3 Small, 3-27, 3-62, 3-100
High-Reliability G3r V2, 2-65, 3-63, 4-72, 4-77, 5-44, 5-49, 6-70, 6-75, 7-43, 7-47
Interconnect, 3-26
Interconnect, Critical-Reliability, 4-113, 5-52, 6-110, 7-29, 7-51
Interconnect, High-Reliability, 4-68, 5-41, 6-66, 7-39
Interconnect, R1V3 Medium, 2-28
Interconnect, R1V3 Small, 3-61, 3-99
Interconnect, Standard-Reliability, 4-27, 5-30, 6-26
R1V3 Medium, 2-63, 2-64, 2-101, 2-102, 2-103
Standard-Reliability, 7-36
Standard-Reliability G3r V2, 1-31, 2-30, 3-28, 5-33, 5-38, 6-30, 6-35, 7-32
Port-Assignment Records, Update, 10-71
Power and Grounding
G1 or G3i Multicarrier, 4-4
G1 or G3i Single-Carrier, 5-4
G2 Multicarrier, 6-3
G2 Single-Carrier Cabinet, 7-3
R1V3 Medium, 2-4
R1V3 Single-Carrier, 1-4
R1V3 Small, 3-4
Power Down, 10-67, 10-160
G2 Multicarrier, 6-94
Multicarrier, 10-3
R1V3 Medium, 2-15, 2-48, 2-83
R1V3 Single-Carrier, 1-15
R1V3 Small, 3-13, 3-47, 3-82

Power Unit
631-Type, 3-24, 3-59, 6-24, 6-64, 6-107
G1 or G3i Multicarrier, 4-24
G2 Multicarrier, 6-106
R1V3 Medium, 2-26, 2-60
R1V3 Small, 3-23, 3-58, 3-95
Power Unit Pairs
631AR1 and 631BR1, 2-26, 2-60, 2-96
631DA1 and 631DB1, 2-26, 2-60, 2-96
631WA1 and 631WB1, 2-26, 2-60, 2-96
Power Up Multicarrier, 10-4
Power, Connect, 10-32, 10-33
Power-Failure Ground Strap
G1 or G3i Multicarrier, 4-89, 4-138
G1 or G3i Single-Carrier, 5-84
G2 Multicarrier, 6-47, 6-87, 6-135
R1V3 Medium, 2-41, 2-76, 2-114
R1V3 Single-Carrier, 1-53
R1V3 Small, 3-40, 3-75, 3-114
Power-Failure Ground Strap -- G2 Single-Carrier Cabinet, 7-84
Power-Failure Stations
G1 or G3i Multicarrier, 4-5
G1 or G3i Single-Carrier, 5-5
G2 Multicarrier, 6-5
G2 Single-Carrier Cabinet, 7-5
R1V3 Single-Carrier, 1-6
R1V3 Small, 3-6
Premises Distribution System, 2-32
Prerequisite Hardware
G1 or G3i Multicarrier, 4-11, 4-52, 4-94
G1 or G3i Single-Carrier, 5-12
G2 Multicarrier, 6-11, 6-51, 6-91
G2 Single-Carrier Cabinet, 7-12
R1V3 Medium, 2-12, 2-45, 2-80
R1V3 Single-Carrier, 1-12
R1V3 Small, 3-11, 3-45, 3-79
Preventive Maintenance
G1 or G3i Multicarrier, 4-12, 4-53, 4-96
G1 or G3i Single-Carrier, 5-14
G2 Multicarrier, 6-13, 6-53, 6-93
G2 Single-Carrier Cabinet, 7-14
R1V3 Medium, 2-14, 2-47, 2-82
R1V3 Single-Carrier, 1-14
R1V3 Small, 3-12, 3-46, 3-81
Printers Connections, 2-73, 2-111, 3-37, 3-72, 3-111, 4-135, 5-81, 6-44, 6-84, 6-132, 7-80
Public Network, 1-45, 2-35, 2-71, 2-109, 3-35, 3-70, 3-109, 4-42, 4-84, 4-133, 5-76, 6-41, 6-81, 6-129, 7-74

Q

Quality Protection Plan Change Notice (QPPCN), 1-4, 8-2, 9-3, 9-10, 9-18

R

R1V3 Medium
2-Cabinet G3r V2, Critical Reliability, 2-80
2-Cabinet G3r V2, High Reliability, 2-45
2-Cabinet G3r V2, Standard Reliability, 2-11
Alarm Connections, 2-8
Communication Between Equipment Rooms, 2-3
Isolator, 2-6
Make Source Tape, 2-10
Power and Grounding, 2-4
Power Down, 2-15, 2-48, 2-83
Power-Failure Stations, 2-6
Relocation of Port Circuit Packs, 2-3
Service Interruptions, 2-3
Software, 2-6
System Upgrades, 2-11
Upgrade Processes, 2-1
Usable Circuit-Pack Vintages, 2-4
R1V3 Single-Carrier
Power Down, 1-15
R1V3 Small, 3-17, 3-51, 3-86
G3r V2 E, 3-10, 3-44, 3-79
Power Down, 3-13, 3-47, 3-82
R1V3 System, 2-52, 2-88
R1V3 System 75 XE to G3r V2 E, 1-10
R1V3 System Cabinet, 2-16, 2-50, 2-86, 3-15, 3-49, 3-84
R1V3 to G3r V2
Medium-Cabinet, 2-1
Single-Carrier, 1-1
Small Multicarrier, 3-1
Register System as G3r V1.1 or G3r V2, 8-8, 8-13
Register System as G3r V2, 1-59, 2-44, 2-79, 2-117, 3-43, 3-78, 3-117, 4-50, 4-92, 4-141, 5-90, 6-49, 6-90, 6-138, 7-89
Register System As G3r V3, 9-14
Register System as G3r V3, 9-22
Relabel Wall Field
G1 or G3i Multicarrier, 4-49, 4-91, 4-140
G1 or G3i Single-Carrier, 5-86
R1V3 Medium, 2-42, 2-78, 2-115
R1V3 Single-Carrier, 1-55
R1V3 Small, 3-41, 3-76, 3-116
Relocate Port Carrier B, 10-49
Relocate Port Carrier D, 10-62
Relocation of Port Circuit Packs
G1 or G3i Multicarrier, 4-2
G1 or G3i Single-Carrier, 5-2
G2 Single-Carrier Cabinet, 7-2
R1V3 Single-Carrier, 1-3
R1V3 Small, 3-3
Remote, 1-45, 2-36, 2-71, 2-109, 3-35, 3-70, 3-109, 5-76, 6-42, 6-82, 6-130, 7-75
Remote Cabinets, Fiber-Optic Connection, 2-33, 3-31
Remove Circuit Packs
G2 Single-Carrier Cabinet, 7-16

Remove CURL from Module Control Carrier A, 6-15, 6-55, 6-95
Remove Front Door
G1 or G3i Single-Carrier, 5-18
G2 Single-Carrier Cabinet, 7-18
R1V3 Single-Carrier, 1-18
Remove Power-Failure Ground Strap
G1 or G3i Multicarrier, 4-89, 4-138
G1 or G3i Single-Carrier, 5-84
G2 Multicarrier, 6-47, 6-87, 6-135
G2 Single-Carrier Cabinet, 7-84
R1V3 Medium, 2-41, 2-76, 2-114
R1V3 Single-Carrier, 1-53
R1V3 Small, 3-40, 3-75, 3-114
Remove the Existing Control Cabinet
G1 or G3i Single-Carrier, 5-17
R1V3 Single-Carrier, 1-17
Remove the Existing Module Control Cabinet
G2 Single-Carrier Cabinet, 7-17
Removing an EPN, 10-234
removing an EPN from a system, 10-234
removing the Tone Clock circuit packs, 10-234
Replaced G1 or G3i Equipment, Return, 4-50, 4-92, 4-141, 5-91
Replaced G2 Equipment, Return, 6-50, 6-90, 6-138, 7-89
Replaced G3r V1 Equipment, Return, 8-8, 8-13
Replaced System 75 Equipment, Return, 1-59, 2-44, 2-79, 2-117, 3-43, 3-78, 3-118
Required Hardware
Adding First Switch Node, 10-205
G1 or G3i Multicarrier, 4-11, 4-52, 4-94
G1 or G3i Single-Carrier, 5-12
G2 Multicarrier, 6-12, 6-52, 6-92
G2 Single-Carrier Cabinet, 7-12
G3r V1, 8-5, 8-9
G3r V2, 9-6, 9-14
R1V3 Medium, 2-12, 2-46, 2-81
R1V3 Single-Carrier, 1-12
R1V3 Small, 3-11, 3-45, 3-79
Required Tools
G1 or G3i Multicarrier, 4-12, 4-53, 4-96
G1 or G3i Single-Carrier, 5-14
G2 Multicarrier, 6-13, 6-53, 6-93
G2 Single-Carrier Cabinet, 7-14
R1V3 Medium, 2-13, 2-47, 2-82
R1V3 Single-Carrier, 1-14
R1V3 Small, 3-12, 3-46, 3-81
Requirements
Add 3270 Data Module, 10-142
Add Analog Recorded Announcement, 10-126
Add AUDIX Interface, 10-147
Add CallVisor ASAI, 10-157
Add CDR Interface, 10-139
Add CMS Interface, 10-145
Add CO, FX, WATS, and PCOL, 10-100
Add Code Calling Access, 10-109
Add DID Trunks, 10-101
Add Emergency Transfer, 10-140
Add INADS Interface, 10-138
Add ISDN-BRI, 10-163
Add ISN Interface, 10-141
Add Loudspeaker Paging Access, 10-115
Add Loudspeaker Paging with Music, 10-117
Add Music-on Hold Access, 10-122
Add PagePac Paging System, 10-118
Add PMS Access, 10-151
Add Pooled Modem, 10-110
Add Recorded Telephone Dictation Access, 10-135
Add Selector Console, 10-98
Add Speech Synthesis, 10-108
Add Tie Trunks, 10-102
Off-Premises Terminals, 10-111
Out-of-Building Terminals, 10-111
Replace Two 8-Port with 16-Port Analog Pack, 10-152
Rerecord Announcements
G1 or G3i Multicarrier to G3r V2, 4-50, 4-92, 4-141
G1 or G3i Single-Carrier to G3r V2, 5-90
R1V3 Medium to G3r V2, 2-44, 2-79, 2-117
R1V3 Single-Carrier to G3r V2, 1-59
R1V3 Small to G3r V2, 3-43, 3-77, 3-117
Reseat DEFINITY AUDIX System, 1-53, 2-41, 2-76, 2-114, 3-40, 3-75, 3-114, 4-47, 4-89, 4-138, 5-84, 10-4, 10-33, 10-49, 10-65, 10-69, 10-106, 10-161
Reseating DEFINITY AUDIX System, 10-187
Retranslate Port Circuits
G1 or G3i Multicarrier, 4-49, 4-91, 4-140
G1 or G3i Single-Carrier, 5-90
G2 Multicarrier, 6-49, 6-89, 6-137
G2 Single-Carrier Cabinet, 7-88
R1V3 Medium, 2-43, 2-78, 2-116
R1V3 Single-Carrier, 1-58
R1V3 Small, 3-42, 3-77, 3-117
Return Replaced G1 or G3i Equipment, 4-50, 4-92, 4-141, 5-91
Return Replaced G2 Equipment, 6-50, 6-90, 6-138, 7-89
Return Replaced G3r V1 Equipment, 8-8, 8-13
Return Replaced System 75 Equipment, 1-59, 2-44, 2-79, 2-117, 3-43, 3-78, 3-118
Returning Equipment
G3r V2, 9-14, 9-22
RMSS Tape Drive, 2-16
Run Acceptance Tests
G1 or G3i Multicarrier, 4-50, 4-92, 4-141
G1 or G3i Single-Carrier, 5-90
G2 Multicarrier, 6-49, 6-90, 6-138
G2 Single-Carrier Cabinet, 7-89
R1V3 Medium, 2-44, 2-79, 2-117
R1V3 Single-Carrier, 1-59
R1V3 Small, 3-43, 3-78, 3-117

S

Service Interruption, 10-2, 10-14, 10-35, 10-50, 10-66, 10-104, 10-159

G1 or G3i Multicarrier, 4-2
G1 or G3i Single-Carrier, 5-2
G2 Multicarrier, 6-2
G2 Single-Carrier Cabinet, 7-2
R1V3 Single-Carrier, 1-3
R1V3 Small, 3-3
Single-Cabinet, 5-26
Single-Carrier Cabinet
Add G3r, 10-1
G1 or G3i to G3r V2, 5-1
G2 Universal Module to G3r V2 E, 7-1
Ground Plate and Cable Clamps, 1-58, 5-88
Single-Carrier Cabinet Stack
Upgrade, G1 or G3i Single-Carrier, 5-10
Upgrade, G2 Single-Carrier Cabinet, 7-11
Upgrade, R1V3 Single-Carrier, 1-11
Single-Carrier, R1V3 to G3r V2, 1-1
Site Inspections
G1 or G3i Multicarrier, 4-3
G1 or G3i Single-Carrier, 5-3
G2 Multicarrier, 6-3
G2 Single-Carrier Cabinet, 7-3
Small Multicarrier R1V3 to G3r V2, 3-1
Small R1V3 System, 3-51, 3-86
Software
G1 or G3i Multicarrier, 4-6
G1 or G3i Single-Carrier, 5-6
G2 Multicarrier, 6-5
G2 Single-Carrier Cabinet, 7-5
G3r V2, 9-4
R1V3 Single-Carrier, 1-6
R1V3 Small, 3-6
Software Technical Support (STS), 2-6
Software-Translation Update, 8-4, 9-5
Software-Translation Upgrade, 8-4
G1 or G3i Multicarrier, 4-8
G1 or G3i Single-Carrier, 5-8
G2 Multicarrier, 6-9
G2 Single-Carrier Cabinet, 7-9
G3r V2, 9-5
R1V3 Medium, 2-9
R1V3 Single-Carrier, 1-9
R1V3 Small, 3-8
Source Tape
G1 or G3i Multicarrier, 4-9
G1 or G3i Single-Carrier, 5-9
G2 Single-Carrier Cabinet, 7-10
R1V3 Medium, 2-10
R1V3 Single-Carrier, 1-10
R1V3 Small, 3-9
TRACS Report, 6-10
Standard Reliability
R1V3 Medium to 2-Cabinet G3r V2, 2-11
R1V3 Single-Carrier, 1-29, 1-32, 1-34
R1V3 Small to G3r V2 E, 3-10
Standard-Reliability, 5-68, 7-66
G2 to G3r V2, 6-11
G2 Universal Module, TDM/LAN Connections, 6-16
G3r V2, 7-85
G3r V2 from Unduplicated G1 or G3i, 4-10
G3r V2 System — Interconnect Port Networks, 5-30
G3r V2 System Interconnect Port Networks, 7-29
G3r V2 with Three Port Networks, 7-32
G3r V2 with Two or Three Port Networks, 4-31, 5-33, 5-38, 6-30, 6-35, 7-36
G3r V2 with Two Port Networks, 1-31, 2-30, 3-28
Interconnect Port Networks, 4-27, 6-26
Stratum 3 Clock, 10-159
Switch-Connected Expansion Port Networks
G1 or G3i Multicarrier, 4-38
Switched Node Carrier
Add, 10-50
System
Register as G3r V2, 2-44, 2-79, 3-43, 3-78
System 75 Equipment, Return Replaced, 1-59, 2-44, 2-79, 2-117, 3-43, 3-78, 3-118
System Access Ports
G1 or G3i Multicarrier, 4-44, 4-86, 4-135
G1 or G3i Single-Carrier, 5-80
G2 Multicarrier, 6-44, 6-84, 6-132
G2 Single-Carrier Cabinet, 7-79
R1V3 Medium, 2-38, 2-73, 2-111
R1V3 Single-Carrier, 1-49
R1V3 Small, 3-37, 3-72, 3-111
System as G3r V1.1 or G3r V2, Register, 8-8, 8-13
System as G3r V2, Register, 1-59, 2-117, 3-117, 4-50, 4-92, 4-141, 5-90, 6-49, 6-90, 6-138, 7-89
System Cabinet, R1V3, 2-86, 3-84
System Registration
As G3r V3, 9-14, 9-22
System Status Verification, 9-7, 9-15
System Status, Verify, 1-14, 2-14, 2-48, 2-83, 3-13, 3-47, 3-81, 4-12, 4-53, 4-97, 5-14, 6-13, 6-53, 6-93, 7-14, 8-5, 8-10, 10-2, 10-14, 10-35, 10-51, 10-66, 10-104, 10-159
System Updates and Upgrades, 9-6
System Upgrades
G1 or G3i Multicarrier, 4-10
G1 or G3i Single-Carrier, 5-10
G2 Multicarrier, 6-10
G2 Single-Carrier Cabinet, 7-10
R1V3 Single-Carrier, 1-10
R1V3 Small, 3-10
system-parameters, changing, 9-18

T

TDM/LAN Bus Terminators
Single-Cabinet, 5-26
TDM/LAN Cables, 2-22, 2-25
Disconnect, G2 Single-Carrier Cabinet, 7-16
TDM/LAN Connections
G1 or G3i Multicarrier, 4-62, 4-105
G2 Multicarrier, 6-23, 6-63, 6-102
G3r V2 E, 1-26
Standard-Reliability G2 Universal Module, 6-16

Third Switch Node, 10-171
Tie Trunk Service, 10-104
TN1650B Memory Circuit Pack, 10-183
TN1656 Tape Drive, 2-6
TN1657 Disk Drive
G3r V3 Memory Addition, 10-183
TN553 and TN726B Circuit Packs, Pinouts, 2-40, 2-75, 2-113, 3-39, 3-74, 3-113, 4-46, 4-88, 4-137, 5-83, 6-46, 6-86, 6-134, 7-82
TN553 and TN726B, Cross Connect
G2 Multicarrier, 6-87
R1V3 Medium, 2-40, 2-76, 2-113
R1V3 Single-Carrier, 1-52
R1V3 Small, 3-114
TN570, 2-62, 2-81
TN574 DS1C, 2-69
TN736 Power Unit, 2-60
Tools, Required, 1-14, 2-13, 2-47, 2-82, 3-12, 3-46, 3-81, 4-12, 4-53, 4-96, 5-14, 6-13, 6-53, 6-93, 7-14
TRACS Report
Source Tape, G2 Multicarrier, 6-10
Source Tape, G2 Single-Carrier Cabinet, 7-10
Translations
Enter Added, 10-34, 10-70, 10-107, 10-144, 10-145, 10-147, 10-155, 10-157, 10-158, 10-161, 10-163
Twentythird Port Network, 10-171

U

Unduplicated G1 or G3i to Standard-Reliability G3r V2, 4-10
Universal Module
Single-Carrier Cabinet G2 to G3r V2 E, 7-1
Update Port-Assignment Records, 10-71
Update Process
G3r V1, 8-1
G3r V2, 9-1
Upgrade Cabinet
G1 or G3i Multicarrier, 4-10, 4-51, 4-93
G2 Multicarrier, 6-11, 6-51, 6-91
R1V3 Medium, 2-11, 2-45, 2-80
R1V3 Small, 3-44, 3-79
Upgrade Process
G1 or G3i Multicarrier, 4-1
G1 or G3i Single-Carrier, 5-1
G2 Multicarrier, 6-1
G2 Single-Carrier Cabinet, 7-1
G3r V1, 8-1
G3r V2, 9-1
R1V3 Medium, 2-1
R1V3 Single-Carrier, 1-1
R1V3 Small, 3-1
Upgrade R1V3 Medium, 2-1
Critical-Reliability G3r V2 E, 2-80
High-Reliability G3r V2 E, 2-45
Standard-Reliability G3r V2 E, 2-11
Upgrade Single-Carrier Cabinet Stack
G1 or G3i Single-Carrier, 5-10
G2 Single-Carrier Cabinet, 7-11
R1V3 Single-Carrier, 1-11
Upgrade Software-Translation
G1 or G3i Multicarrier, 4-8
G1 or G3i Single-Carrier, 5-8
G2 Multicarrier, 6-9
G2 Single-Carrier Cabinet, 7-9
R1V3 Medium, 2-9
R1V3 Single-Carrier, 1-9
R1V3 Small, 3-8
Upgrade System
G1 or G3i Multicarrier, 4-10
G1 or G3i Single-Carrier, 5-10
G2 Multicarrier, 6-10
G2 Single-Carrier Cabinet, 7-10
R1V3 Medium, 2-11
R1V3 Single-Carrier, 1-10
R1V3 Small, 3-10
upgraded from a G1 to a G3, 4-6, 5-6
Usable Circuit-Pack Vintages
G1 or G3i Multicarrier, 4-3
G1 or G3i Single-Carrier, 5-3
G2 Multicarrier, 6-2
G3r V2, 9-3
R1V3 Single-Carrier, 1-4
R1V3 Small, 3-4

V

Verify System Status, 1-14, 2-14, 2-48, 2-83, 3-13, 3-47, 3-81, 4-12, 4-53, 4-97, 5-14, 6-13, 6-53, 6-93, 7-14, 8-5, 8-10, 10-2, 10-14, 10-35, 10-51, 10-66, 10-104, 10-159
Verify Usable Circuit-Pack Vintages
G1 or G3i Multicarrier, 4-44, 4-86, 4-135
G1 or G3i Single-Carrier, 5-80
G2 Multicarrier, 6-44, 6-84, 6-132
G2 Single-Carrier Cabinet, 7-79
R1V3 Medium, 2-38, 2-73, 2-111
R1V3 Single-Carrier, 1-49
R1V3 Small, 3-37, 3-72, 3-111
Verifying System Status, 9-7, 9-15
Voice Terminals, 10-165

W

Wall Field
Relabel, G1 or G3i Multicarrier, 4-49, 4-91, 4-140
Relabel, G1 or G3i Single-Carrier, 5-86
Relabel, R1V3 Medium, 2-42, 2-78, 2-115
Relabel, R1V3 Single-Carrier, 1-55
Relabel, R1V3 Small, 3-41, 3-76, 3-116
Wideband Switching, 10-167

Wiring, Dual 2-Wire and 4-Wire Endpoints, 10-173, 10-178, 10-182
WP-91716 L6, 2-25, 2-59
WP-91716 L7, 2-22, 2-57

Z

ZAHF4 Bus Terminators, 2-25, 2-59