Meridian 1

Software conversion procedures

Document Number: 553-2001-320
Document Release: Standard 21.00
Date: June 1999

© 1989, 1999
All rights reserved

Printed in the United States of America

Information is subject to change without notice. Nortel Networks Corporation reserves the right to make changes in design or components as progress in engineering and manufacturing may warrant. This equipment has been tested and found to comply with the limits for a Class A digital device pursuant to Part 15 of the FCC rules, and the radio interference regulations of Industry Canada. These limits are designed to provide reasonable protection against harmful interference when the equipment is operated in a commercial environment. This equipment generates, uses and can radiate radio frequency energy, and if not installed and used in accordance with the instruction manual, may cause harmful interference to radio communications. Operation of this equipment in a residential area is likely to cause harmful interference in which case the user will be required to correct the interference at their own expense.

SL-1 and Meridian 1 are trademarks of Nortel Networks Corporation.

Revision history

December 20, 1989

Standard, release 1.00.

August 28, 1990

Standard, release 2.00. This document was reissued for updates and changes for X11 release 15.

Release 3.0 was omitted.

December 20, 1990

Standard, release 4.00. This document was reissued for updates and changes for X11 release 16.

July 31, 1991

This document is reissued for reorganization and updates to the conversion procedures.

December 1, 1991

Standard, release 5.00. This document was reissued for updates and changes for X11 release 17.

December 31, 1992

Standard, release 6.00. This document was reissued to include updates for X11 release 18. This release includes information from Product Bulletins 90046 (September 1991) and 91060 (November 1991).

Release 7.00 was omitted.

April 1, 1993

Standard, release 8.00. This document is reissued to include updates for X11 release 18, and option 81 information. A new parallel reload procedure has been added for option 81 systems. This version includes information from Product Bulletin 93007 (January 1993).

August 1, 1993

Standard, release 9.00. This document is updated to include information for X11 release 19. Changes are noted with revision bars in the margins.

October 31, 1993

Standard, release 10.00. This document is updated to include information for Voice Mailbox Administration and the 12-Mbyte memory card. Changes are noted with revision bars in the margins.

April 1, 1994

Standard, release 11.00. This document is issued to include changes for option 61C, and to include information from Product Bulletin 93054 (May 1993). Revisions are noted with change bars in the margin.

December 1994

Standard, release 12.00. This document is reissued to include information on the Small systems Multi-Disk Unit (SMDU). Changes to technical content are noted by revision bars in the margins.

December 1994

Standard, release 13.00. This document is reissued for technical content.

July 1995

Standard, release 14.00. This document is reissued to support option 81C and X11 release 21. Updates are noted with revision bars in the margins.

December 1995

Standard, release 15.00. This document is reissued to include information on the NT9D19 Call Processor Card and upgrade procedure. Changes to technical content are noted by revision bars in the margins.

August 1996

Standard, release 16.00. This document is reissued to include information on the NT9D19 Call Processor Card for options 51C and 61C and X11 release 22. Changes to technical content are noted by revision bars in the margins.

August 1996

Standard, release 17.00. This document is reissued for technical content.

October 1997

Standard, release 18.00. This document is reissued for technical content and to include information on the NT5D10 Call Processor and NT5D61 Input Output Disk Unit with CD-ROM (IODU/C) cards.

April 1998

Standard, release 19.00. Reissued for technical content.

March 1999

Standard, release 20.00. This document is reissued to include information on the NT5D03 Call Processor card.

June 1999

Standard, release 21.00. This document is reissued to include information on automatic inline conversion from release 19 or later to release 24.

Contents

Introduction 1

Related documentation 3

Conversion notes 5

Conversion media 7
System tape 8
System disks and data cartridges 8
CD-ROM and security devices 9

Software packaging 9

General conversion information 10

DN Expansion 11

SL-1 STE systems and option 21E 11

SL-1 ST systems 11

Upgrading from tape to disk drives 11

Upgrading from disk drives to CD-ROM 12

Integrated Services Digital Network (ISDN) 12
ISDN Calling Line ID (CLID) enhancements 13
Converting ISDN systems 14
D-Channel monitor 14

Incremental Software Management 14

Patches 15

Automatic Trunk Maintenance (ATM) 16

Command Status Link (CSL) 16

Converting X09 to X11 release 2 16

Conversion notes by release 17
X11 release 10 17
X11 release 11 18
X11 release 12 18
X11 release 13 18
X11 release 14 18
X11 release 15 18
X11 release 16 18
X11 release 17 19
X11 release 18 20
X11 release 19 22
X11 release 20 24
X11 release 21 25
X11 release 22 26
X11 release 23 27
X11 release 24 30

X11 release supported by machine type 32

Procedure 1: Preconversion procedure 35

Preconversion steps 37

Procedure 2: Converting from X11 release 8 or 9 to X11 release 10 43

Convert to X11 release 10 44

Procedure 3: Convert from one X11 release to a later release . 47

Automatic inline conversion 47
Convert with Automatic Inline Conversion: Option 51C (without IODU/C) 48
Convert with Automatic Inline Conversion (X11 release 14 and later) 51
Convert without Automatic Inline Conversion (X11 releases 12 and 13) 53

Converting X11 release 15 through 17 to release 18 or 19 55

Convert the NT/61 to X11 release 18 56
Convert the RT to X11 release 18 66
Convert the XT/71 to X11 release 18 76

Procedure 4:
Convert to later issue of the same release 89

Procedure 5:
Using a three-disk or four-disk configuration . . . 93

X11 releases 17 and 19 93

X11 release 20 and later 96

Procedure 6:
Performing a parallel reload 101

Parallel reload the 61C/81/81C 102
Completing the parallel reload on the option 61C/81/81C 106
Backing out of the parallel reload on the option 61C/81/81C 111

Parallel reload the NT/RT/61 114
Backing out of the parallel reload on the NT/RT/61 116
Completing the parallel reload on the NT/RT/61 118

Parallel reload the XT/71 121
Backing out of the parallel reload on the XT/71 124
Completing the parallel reload on the XT/71 126

Procedure 7:
CD-ROM software conversion 131

Parallel reload the 61C/81/81C 132
Backing out of the parallel reload on the option 61C/81/81C 144

Option 51C software conversion 147

Adding features 153
Using keycode diskettes 153
Using electronic keycode files 154
Entering the keycode manually 157

Procedure 8:
Installing new data cartridges and option packages 159

Systems equipped with NT6D63 IOP or NT5D20 IOP/CMDU cards 160

Systems equipped with QPC584, NT9D34, and QPC742 cards 161

Procedure 9:
Install a new Read Only Memory card 163

Replace ROM card on single CPU systems 166

Replace ROM card on dual CPU systems 167

Procedure 10:
Increasing memory 169

X11 release 24 169

X11 release 23 172

X11 release 22 175

X11 release 21 176

X11 releases 18 through 20 176

X11 release 17 and earlier 178

Increasing memory on NT9D19, NT5D10 CP and NT5D03 CP cards 180

Installing memory SIMMs on NT9D19, NT5D10 or NT5D03 CP cards 182

Installing new NT9D19, NT5D10 or NT5D03 CP cards on systems with IODU/C 196

Installing new NT9D19, NT5D10 or NT5D03 CP cards 201

Increasing memory on NT6D66 CP cards 210

Upgrading existing NT6D66AA/AB CP cards to 48 MB 211

Replacing 24 MB CP cards with new 48 MB CP cards 232

Procedure 11:
Software Installation Tool 243

General information 244

Status summary chart 246

Messages 247

Installation on systems with NT9D19, NT5D10 or NT5D03 CP cards 248
Main menu 249
Splitting the Cores 250
Installing software, database, and ROMs 251
Installing software and ROMs 253
Installing software only 254
Installing database only 255
Installing ROMs only 256
Updating flash ROM with CP software 257
Transferring a database from a previous system 257
Quitting 258
NT9D19, NT9D10 and NT5D03 CP card installation tool reference 259

Installation on systems with NT6D66 CP cards 275
Main menu 276
Splitting the Cores 277
Installing software, database, and ROMs 277
Installing software and ROMs 279
Installing software only 280
Installing database only 280
Installing ROMs only 281
Transferring a database from a previous system 282
Quitting 283
NT6D66 CP card installation tool reference 283

. 299

Procedure 12:
Postconversion procedure 301

Postconversion steps 302

Procedure 13: Upgrading to a new Call Processor card 309

Upgrading to a new CP card in Options 61C, 81, or 81C 310
Performing a data dump 310
Splitting the cores 311
Upgrading Core 1 312
Upgrading Core 0 315
Completing the upgrade 318

Upgrading to a new CP card in an Option 51C. 319
Performing a data dump 319
Installing the new CP card and system software 320
Completing the upgrade 323

Procedure 14: CD-ROM Software Installation Tool 325

Status Summary Charts 327

Messages 328

Introductory Screen 329

Install Menu 330
Installing Software, CP-BOOTROM, and IOP-ROM 332
Installing Software, Database, CP-BOOTROM, and IOP-ROM . . 332
Installing Software only 332
Installing Database only 333
Install CP-BOOTROM 334
Install CP-ROM (NT6D66 CP cards only) 334
Install IOP-ROM 335
Reinstalling CP-Software 335
To copy system software from the other Core 336
To go to the Tools Menu 336
To Install Keycode only 336
To quit 336

Tools Menu 338
Setting the system date and time 340
Partitioning the hard disk 340
Displaying the hard disk partition size 341

Regenerate the PDT password 341
To install CP-software at a specified slot 341
To print the CD-ROM content 341
To print the Keycode content 342
To print the Security Device content 343
To check the customer-specific part of the CD-ROM 343
To manually create a Keycode diskette 343
To archive the existing database 344
To go back to the Main Menu 344

List of figures

Figure 1
SIMM Identification on NT9D19 CP, NT5D10 CP or NT5D03 CP card 187

Figure 2
SIMM Installation on NT9D19, NT5D10 or NT5D03 CP card 188

Figure 3
SIMM Identification on the NT6D66AA CP card 216

Figure 4
SIMM Installation on the NT6D66AA CP card 217

Figure 5
NT6D66AB/DB CP card SIMM Identification 222

Figure 6
NT6D66AB/DB CP card SIMM Installation 224

List of tables

Table 1
Automatic Inline Conversion 5

Table 2
Release 21 memory requirements 25

Table 3
Release 22 memory requirements 26

Table 4
Release 23 memory requirements 27

Table 5
Release 23 software generics 28

Table 6
IODU/C and IOP/CMDU differences 29

Table 7
Release 24 memory requirements 30

Table 8
Release 24 software generics 31

Table 9
Software generic by machine type 32

Table 10
Print site data 41

Table 11
Option 61C, 81, 81C parallel reload summary 132

Table 12
Option 51C software conversion summary 147

Table 13
LD 143 commands 153

Table 14
QPC584 MSI and NT9D34 EMSI card switch settings 162

Table 15
QPC742 Floppy Disk Interface (FDI) 162

Table 16
ROM requirements by system type and X11 release
for ST, STE, NT, RT, and XT systems 164

Table 17
ROM requirements by system type and X11 release for 21, 21E,
51, 61, 71 and 81 systems 165

Table 18
Release 24 call processor memory requirements 169

Table 19
68040 NT9D19 CP card memory upgrades 170

Table 20
68060 NT5D10 CP card memory upgrades 171

Table 21
68060E NT5D03 CP card memory upgrades 171

Table 22
Release 23 call processor memory requirements 172

Table 23
68030 NT6D66 CP card memory upgrades 173

Table 24
68040 NT9D19 CP card memory upgrades 173

Table 25
68060 NT5D10 CP card memory upgrades 174

Table 26
68060 NT5D03 CP card memory upgrades 174

Table 27
Supported CP card memory upgrades 181

Table 28
Print site data (Part 1 of 2) 306

Introduction

This document explains how to perform the following:

- convert an X11 software release to a higher release
- convert software upissues within a single release
- perform parallel reloads for NT, RT, and XT, and system options 61, 61C, 71, 81, and 81C
- perform memory upgrades

THIS DOCUMENT IS FOR SOFTWARE CONVERSION AND MEMORY UPGRADES ONLY. The procedures in this document are not for any other purpose.

Specific machine types, as they are supported by X11 software releases, are shown in Table 9.

CAUTION

Do not convert a system unless you are thoroughly familiar with it and with conversion procedures. You must read through the procedure before starting.

Note: Converting software on single CPU systems disrupts call processing and allows service only to those telephones connected to Power Failure Transfer Units (PFTUs). Established calls may not be affected.

CAUTION

To avoid damaging equipment from electrostatic discharge, wear a properly connected anti-static wrist strap when working on Meridian 1 equipment.

To convert software on dual CPU systems with minimum disruption to call processing, use the parallel reload method in “Procedure 6: Performing a parallel reload” on page 101. If upgrading to X11 release 18, use “Procedure 7: CD-ROM software conversion” on page 131.

Follow Pre-conversion and Post-conversion procedures for every system conversion.

Throughout this document the term **media** refers to tape, disk, or CD-ROM, whichever applies to your system.

The term **Source** refers to the software that you are **currently** running. **Target** refers to the new software that you are converting to.

CAUTION

Read “Conversion notes” on page 5 before performing any operations.

It contains information crucial to the conversion process.

Related documentation

The following documents may be required when performing upgrades.

— *Product compatibility* (553-3001-156)

— *Upgrade system installation through X11 release 21* (553-3001-250)

— *Upgrade system installation to X11 release 24* (553-3001-258)

— *Disk drive upgrade procedures* (553-3001-251)

— *X11 features and services*

— *X11 input/output guide*

— *NT5D61 IODU/C Reference guide*

— *General Release Bulletins* provide hardware requirements and advisory notes for a given software release.

Conversion notes

Conversion procedures vary with the system type and **Source** release of software.

Table 1 shows the X11 releases supported by Automatic Inline Conversion.

Table 1
Automatic Inline Conversion

From (minimum) Source release/issue	Directly to Target release
10.xx	14, 15
11.xx	12, 13, 14, 15
12.xx	13, 14, 15
13.xx	14, 15
14.xx	15
15.xx	16, 17, 18
16.xx	17, 18
17.xx	18, 19
18.xx	19
19.xx	20, 21, 22, 23, 24
20.xx	20, 21, 22, 23, 24
X81 Phase 7 A, B, or C	20, 21, 23, 24
X81 Phase 8, A0, A1& A2	20, 21, 23, 24

Table 1
Automatic Inline Conversion (Continued)

From (minimum) Source release/issue	Directly to Target release
X81 Phase 8, B0, B1& B2	20, 21, 23, 24
21.xx	22, 23, 24
22.xx	23, 24
23.xx	24

Note: To convert to X11 release 12 or 13 from X11 release 10, you must go through X11 release 11. X11 release 11 is used to support Automatic Inline Conversion from X11 release 10 only. It is not a serviceable software release.

Note that, unlike previous releases, X11 release 10 offers Automatic Inline Conversion to release 15. It is no longer necessary to step up through each release.

To convert to a release higher than X11 release 15, you must convert to X11 release 15 first. You cannot, for example, go directly from X11 release 10 to X11 release 16. You must be operating on X11 release 17 before converting to X11 release 19 or higher. For example, X11 release 16 cannot be converted directly to X11 release 19, it must converted to X11 release 17 first.

Conversions may require any of the following hardware changes:

— upgrade from tape drive to disk drive (X11 release 10 and higher)

— 3.5-inch, 2 MB, High Density (HD) floppy disks (X11 release 15 through X11 release 17)

— 3.5-inch, 4 MB, Extra High Density (ED) floppy disks (X11 release 18 and later)

— upgrade from floppy disk unit (FDU) to small system multi disk unit (SMDU) in option 21E and STE systems

— replacement of security data cartridge for systems equipped with disks (A different cartridge is required for each intermediate release.)

— replacement of ROM daughter board for intermediate or Target release (See the ROM chart in “Procedure 9: Install a new Read Only Memory card” on page 163.)

— installation of new memory cards

It may be more time- and cost-effective to simply load new software and reenter system data, rather than going through all the procedures that a conversion requires. To determine the best option and how to take advantage of Target software features and services, consult your Northern Telecom representative.

CAUTION

Always load LD 43 from the **Source** (current) media. That is, the media containing the software currently running your system.

Conversion media

Northern Telecom supplies tapes, disks, or CD-ROM depending on system requirements, for conversion to a higher software release. If required, software for intermediate releases is also included. You do not need both tape and disk, except when upgrading from tape drive to disk drive.

If Automatic Inline is supported for your conversion, the conversion software is included in the **Target** software. Additional conversion media are not required.

The media received contains the conversion program (LD 66) for converting your current data to the format required for the next release. Check the labels on the media for accuracy. The conversion label contains the following information:

X mmm Z nnn where

X	= Machine type number (see Table 9)
mmm	= **Source** software release and minimum issue
Z	= Conversion tape vintage
nnn	= **Target** software release and minimum issue

System tape

X11 release 7 and earlier use tape drives as their media. X11 releases 8 and 9 use both tape and disk. The system tapes contain data for all features and services requested by the customer for the new software generic. The tape (as shipped from the factory) does not contain any customer data (for example, line, trunk, or set assignments). Three identical X11 system tapes are supplied to the conversion site.

System disks and data cartridges

For X11 release 10 and later, disk drives are required. Northern Telecom supplies three sets of floppy disks for each system, and one QMM42 data cartridge for each CPU. Software for options 51C, 61C, 81, and 81C include two sets of disks. The disks and data cartridge work for the system specified on the label only, and must match your system ID. These disks and data cartridges cannot be used to upgrade any other system. Each QMM42 Data Cartridge is installed on a QPC584 Mass Storage Interface (MSI), NT9D34 Enhanced Mass Storage Interface (EMSI), or QPC742 Floppy Drive Interface (FDI) card (see “Procedure 8: Installing new data cartridges and option packages” on page 159). In options 51C, 61C, 81, and 81C, the data cartridge is installed on the NT6D63 I/O Processor (IOP) card or NT5D20 IOP/CMDU card.

The data cartridge contains X11 release and software packaging information. If desired, a new option package on the same release may be added by installing a new data cartridge and loading floppy disks that contain the new package. However, the cartridge ID must match the disks installed in the system. A sysload is required to enable new packages.

CD-ROM and security devices

For X11 release 24 systems, the following media is required for new software installations:

- CD-ROM— A generic CD-ROM that contains all 12 software generics.
- Security device — Installed onto the IODU/C card to provide a unique program for each system. The device does not contain feature or software release specific information.
- Install diskette — Activates the Software Installation Tool. The Software Installation Kit contains three Install diskettes to support each Call Processor card (68060 and 68060E). Use the Install diskette that corresponds with your CP card type.
- Keycode diskette — Consists of “keycodes” that contain software feature data. The keycodes must validate against the security device.
- 2 MB customer database diskettes —A blank DOS formatted disk for archiving the customer database.
- Database transfer utility diskette — Supports the transfer of 4 MB databases to 2 MB. The Database Transfer utility is used with option 51C, 61C, 81, and 81C databases only.

The keycode contains the X11 software information. For new features or Incremental Software Management (ISM) limits, a new keycode is required (a new CD-ROM, security device, or install diskette is not required).

Software packaging

Remember to check your system packages prior to conversion. Be sure **Target** software contains all the packages required to support system operation.

General conversion information

This document supports conversions for ST, STE, NT, RT, XT, 21, 21E, 51, 51C, 61, 61C, 71, 81, and 81C systems only.

Note: Conversion from X37 to X11 is not supported.

Be sure your system has enough memory to complete the conversion. If not, go to "Procedure 10: Increasing memory" on page 169 **before you begin.** Refer to *Meridian 1 capacity engineering* (553-3001-149) for details concerning system capacity requirements.

To monitor the CPUs during parallel reload procedures, install a temporary Serial Data Interface (SDI) card, and connect a local TTY (or modem for remote TTY access). Refer to the parallel reload procedures for more information.

In systems equipped with superloops, calls will drop during initialization when Peripheral Software Download (PSDL) occurs. The Superloop Network (NT8D04) and Controller (NT8D01) cards download peripheral software prior to initialization completion. This may extend the duration of the system initialization when completing a conversion.

When a software upgrade is performed to add new feature packages, a sysload or parallel reload is required to enable the new software.

If a Force Download occurs during a parallel reload, initialization can take up to 15 minutes. Calls in process will be interrupted.

When QPC742D FDI Cards are used, install disks in both disk drives before powering up the system. This is not required with later vintages of the FDI card.

If you have Auxiliary Processors working with your system, be sure they are powered up after you complete your conversion.

CAUTION

Do not attempt backward data dumping between software versions, upissues, or releases. It will corrupt your data.

DN Expansion

X11 release 12 to X11 release 13 or higher conversion is designed to convert data blocks with the smaller DN fields on the **Source** disk to data blocks with expanded DN fields, irrespective of the DN Expansion package on the **Target** disk/system.

CDR Expansion is **not** required to enable DN expansion. However, in order for Call Detail Records to accurately reflect system activity, CDR Expansion must be enabled as well as DN Expansion. If DN Expansion is equipped and CDR Expansion is not, system operation is not affected, but CDR records will be inaccurate.

SL-1 STE systems and option 21E

Beginning with X11 release 20B, STE and option 21E systems must be upgraded to a small system multi disk unit (SMDU).

X11 release 21 is the highest supported X11 software release for STE and option 21 systems. The STE, and option 21E, must upgrade to the option 51C or option 61C before converting the customer database to X11 release 24.

SL-1 ST systems

SL-1 ST machines requiring the Memory Expansion capability or ISDN software options must upgrade to the QPC937A or QPC717D ROM card, and to the QPC709D card when loading X11 release 12, 13, or 14. X11 releases 15 through 17 use the QPC940 ROM. The ST machine is supported up to X11 release 17 only.

> ***Note:*** The ST and 21 machine must be upgraded to STE and 21E (respectively) to support X11 release 18 and later.

Upgrading from tape to disk drives

X11 release 10 requires disk drives. Convert your system from tape drive to disk drive media prior to upgrading to X11 release 10 software.

To convert from X11 release 5 to X11 release 8, you must go through X11 release 7.12 (for MS systems only) and 7.17. From X11 release 5, convert to X11 release 7.12 (on the MS). From 7.12, convert to 7.17. You can then convert to X11 release 8. All other systems can convert from X11 release 5 to X11 release 7.17, then to X11 release 8.

Upgrading from disk drives to CD-ROM

Upgrading a drive unit to CD-ROM requires the existing 4 MB database to be converted to 2 MB. The database is converted to 2 MB is using one of the following methods:

- using the Database Transfer utility (for systems equipped with IOP/CMDU or separate IOP and CMDU cards only)
- using the direct cabling method (for systems equipped with MDU or SMDU and EMSI cards)
- using the “Copy Database from Redundant Disk” command in the Meridian 1 Software Installation Tool (for redundant systems equipped with IOP/CMDU or separate IOP and CMDU cards)

Integrated Services Digital Network (ISDN)

Any ISDN site upgrading to X11 release 15 or higher must be configured with the QPC757 vintage C, D-Channel Handler (DCHI) card.

When performing a parallel reload, ISDN Primary Rate Interface (PRI) calls are dropped during initialization of **Target** software.

X11 release 18 and later support the NT6D80 Multi-purpose Serial Data Link (MSDL) card for D-channel interfaces.

X11 release 18 and later do not support even numbered port assignments on the NT6D11 International ISDN D-Channel card. The even port assignments must be updated to odd port assignments in LD 17 prior to converting. If not done, the D-channel will not be reestablished after service change. Only QPC757 D-Channel mode is supported.

Options 51C, 61C, and 81 require clock controller QPC471 vintage H or later, or QPC775 vintage C or later.

Option 81C requires clock controller QPC471 vintage H or later, or QPC775 vintage E or later.

ISDN Calling Line ID (CLID) enhancements

The Calling Line ID Enhancements feature delivers enhanced functionality pertaining to the construction and generation of Calling Line ID, and allows more program flexibility for Meridian 1 sets pertaining to CLID.

Prior to X11 release 22, CLID supported a single Listed Directory Number (LDN), a single Home NXX, and single Home Location Code. The Calling Line ID was built from key 0 of a set, or the LDN.

The CLID enhancement parameters have been enhanced to include multiple NXXs, multiple Home Locations Codes (HLOCs), multiple Numbering Plan Areas (NPAs), multiple Local Steering Codes (LSCs), and multiple Listed Directory Numbers (LDNs). The calling Line ID enhancement now allows more flexible CLID generation than prior releases.

With the CLID Enhancement feature, the system now supports:

- A new table driven feature with up to 4000 entries.
- Any entry number can be programmed against any DN on a per DN basis.
- Existing LDN can be used on a per DN key, per set basis.
- The existing Individual Directory Number (IDN) key of an ACD set can be sent as the CLID.
- The active DN key determines the CLID that is sent for conference and transfer.
- Supports the flexibility of 2-3 or 5-7 digits DNs.

During conversion, two CLID entries (0 and 1) are created in the customer data block. The entries are configured with ISDN CLID information from the existing customer data block, such as HNPA, HNXX, HLOC, etc. Entry 0 is used for the keys/sets that have a DID number. Entry 1 is used for the keys/sets that do not have a DID number.

Refer to *X11 features and services* for more information on the CLID Enhancement feature.

Converting ISDN systems

New software may contain changes to the ISDN D-Channel parameters that are downloaded to the DCHI or MSDL card. The system software automatically downloads the new parameters upon SYSLOAD if a parallel reload is not performed.

When performing a parallel reload, and switching to the second CPU, software- and hardware-disable and reenable all DCHI cards to ensure parameter downloading with X11 release 16 and earlier.

Ensure that the Release ID in the D-channel parameters (LD 17) at the far end is changed to the lowest release in you site configuration.

When a DCHI port is configured as a TTY port, INI messages may be truncated when printed after sysload. System performance is not affected, but you should view your history file for the entire message.

D-Channel monitor

When the D-channel monitor is software-enabled and deactivated with a maintenance telephone, a data dump and sysload reactivate the monitor. To avoid this situation, software-disable the D-channel monitor prior to datadump and sysload.

Incremental Software Management

Incremental Software Management (ISM) defines the maximum number of Terminal Numbers, Automatic Call Distribution (ACD) Directory Numbers, ACD positions (agents and supervisors), and AST sets allowed in a system. Before upgrading to X11 release 15.55 or higher, read the ISM section in *X11 features and services*.

With X11 release 17, ACD AST sets are configured individually in LD 10 and LD 11. When you are upgrading to X11 release 17, you must reenter your AST sets manually into the database in LD 10 and LD 11 because they will be lost during conversion.

X11 release 18 and later include D-channels (DCH), Application Module Links (AML), Digital Subscriber Loops (DSL), and Logical Terminal Identifier (LTID).

X11 release 19 and later include Meridian Packet Handlers (MPH) as part of ISM tracking.

> ***Note:*** DSL, LTID, and MPH are part of ISDN Basic Rate Interface (BRI). Refer to *ISDN Basic Rate Interface product description* (553-3901-101) for more details.

CAUTION
System information will be lost.
With Incremental Software Management (ISM) in X11 release 15.55 and higher, if SYS message 4327, 4328, 4329, or 4330 appears at sysload. Reload **Source** system disks. Order ISM disks with sufficient system parameters configured.

Patches

For option 51C, 61C, 81, and 81C systems, **patches are deleted** when converting to a new X11 software release, or when performing a software upissue. Software **patches are not deleted** when the same software release is reinstalled in the system.

For STE, option 21, 21E, 51, 61, and 71 systems running 15.53, 14.41, or earlier, patches must be removed prior to converting. Data corruption may occur if you do not remove the patches prior to conversion.

For STE, option 21, 21E, 51, 61, and 71 systems running release 16.65 and later, patches do not need to be removed prior to conversion. During a data dump (EDD), an EHM500 message prints out, rather than patch numbers, indicating existing patches will not be saved on **Target** media.

If a patch is included in your software, a plus sign (+) will appear next to the software issue number in LD 22.

Automatic Trunk Maintenance (ATM)

When converting X11 release 7 (prior to issue 7.09) to X11 release 8, ATM data must be removed prior to conversion, then restored after conversion.

Command Status Link (CSL)

When converting X11 release 8 (prior to issue 8.25) to X11 release 9, the Data Service DNs (DSDN) must be removed prior to conversion, then restored after conversion. Contact your Technical Support personnel to remove the DSDNs. To determine whether or not you have DSDNs, check in LD 22.

```
LD 22
REQ     PRT
TYPE    DSDN
CUST    <cr>
DN      <cr>
```

Converting X09 to X11 release 2

Automatic Route Selection (ARS) on X09 is replaced by BARS or NARS in X11. Due to the differences between the ARS and BARS data structures, complete data conversion is not supported. You can either convert the ARS data to BARS data and modify the resulting BARS data structure, or not convert ARS data at all and input completely new BARS data.

To deny conversion of ARS data to BARS data, input the command CDD BLD in LD 66.

An upgrade from X09 to X11 release 2 requires the X966Z205 conversion tape.

Conversion notes by release

X11 release 10

X11 release 10 requires disk drives. Convert your system from tape drive to disk drive media prior to upgrading to X11 release 10 software. Refer to “Conversion notes by release” on page 17 for the list of conversion packages and supported releases.

Refer to *Disk drive upgrade procedures* (553-3001-251) for complete instructions concerning tape to disk drive upgrades.

The following conversion software is required when upgrading to X11 release 10. Check your conversion media to be sure it is correct. You must have all the conversion software between your current release and X11 release 10 as well as the system software required for each release. For example, if you are running on X11 release 7, you must have conversion packages and the system media for X11 releases 8, 9, and 10.

— X11 release 2 to X11 release 3 conversion: X205B301
  Must be 2.05 or later

— X11 release 3 to X11 release 4 conversion: X306A401
  Must be 3.06 or later

— X11 release 4 to X11 release 5 conversion: X416C502
  Must be 4.16 or later

— X11 release 5 to X11 release 7 conversion: X516CR7
  Must be 5.16 or later

— X11 release 7 to X11 release 8 conversion: X709B810
  Must be 7.09 or later
  For system type 711, use 7.12 to 7.17 to X11 release 8.

— X11 release 8 to X11 release 9 conversion: X826A901
  Must be 8.26 or later

— X11 release 9 to X11 release 10 conversion: X903B1009
  Must be 9.03 or later

X11 release 11

This is not a serviceable release. The media for X11 release 11 is required for upgrading from X11 release 10 to release 12 or 13.

X11 release 12

Conversion to X11 release 12 requires the following software conversion media and site transition media:

— X11 release 10 to X11 release 11 conversion disk X1009A1120

— X11 release 11.20 site transition disk

SL-1 ST machines requiring the Memory Expansion or ISDN must upgrade to the new ROM card, QPC717D and QPC709D, when loading X11 release 12 through 14 software.

X11 release 13

Once a system has been converted to either X11 release 11 or 12, Automatic Inline Conversion takes place during conversion sysload.

X11 release 14

X11 release 14 supports Automatic Inline Conversion from X11 release 10, 12, and 13. Automatic Inline Conversion takes place during conversion sysload.

X11 release 15

X11 release 15 is a hardware breakpoint. It requires a new ROM card, and 3.5-inch 2 MB, High Density (HD) disks. It also introduces Meridian 1 system options 21, 51, 61, and 71. Refer to *Meridian 1 system overview* (553-3001-100) for complete information. It is imperative that ALL software and hardware requirements are met.

X11 release 16

You *must* be running X11 release 15 before upgrading to X11 release 16.

XT and 71 machines require a hard disk drive and QPC584 version F4, K, or higher, for the three-disk configuration on X11 release 16 and later.

System option 71 and XT machine types require three floppy disks to perform upgrades and conversions. QPC584 version F4, K, or higher, is required to support the procedure. See “Procedure 5: Using a three-disk or four-disk configuration” on page 93 for a complete description for upgrading your system using this method.

Be sure to check memory utilization on the XT and system option 71 machines before converting to X11 release 16. Note the memory stamp issued when any service change program between LD 10 and LD 19 is loaded. If the AVAIL field shows 100,000 or less, add a second memory board *before* conversion. Go to “Procedure 10: Increasing memory” on page 169 for steps to increase your memory.

Option 21 systems must have NT8D18 Release 11 or later to support X11 release 16 software.

X11 release 17

X11 release 17 requires the three-disk configuration for XT and 71 systems.

System option 71 and XT machine types require three floppy disks to perform upgrades and conversions. QPC584 version F4, K, or higher is required to support the procedure. See “Procedure 5: Using a three-disk or four-disk configuration” on page 93 for a complete description for upgrading your system using this method.

As of X11 release 17, each ACD AST set is defined individually by using LD 10 and LD 11. As a consequence, you must reconfigure ACD AST sets manually through LD 10 and LD 11 after upgrading to X11 release 17. See *X11 input/output guide* (553-3001-400).

X11 release 18

X11 release 18 introduces the system option 81. Refer to system documentation for complete information and hardware requirements.

System option 81 machines require clock controller QPC471 vintage H or later, or QPC775 vintage C or later.

X11 release 18 is a hardware breakpoint. The ST and 21 systems must be upgraded to ST Enhanced (STE) or 21 Enhanced (21E) machines to support X11 release 18. Refer to *Upgrade system installation through X11 release 21* (553-3001-250) for the STE and 21E upgrade procedures. The following hardware is required.

— NTND01 Integrated CPU and Memory (ICM)

— NTND02 Miscellaneous SDI Peripheral Signaling (MSPS)

— NTND31 Read Only Memory card

— QPC742F Floppy Disk Interface (FDI)

— NTND15 Floppy Disk Unit (FDU)

X11 release 18 requires the following hardware changes for the NT, RT, XT, 51, 61, and 71. See “Procedure 7: CD-ROM software conversion” on page 131 for hardware installation steps during the parallel reload.

— NTND08 Read Only Memory (ROM) card

— NTND09Bx 6-Mbyte memory card
NTND09Cx 12-Mbyte memory card

— NTND10 Changeover and Memory Arbitrator (CMA) card

— QPC584L Mass Storage Interface (MSI) card or
NT9D34 Enhanced Mass Storage Interface (EMSI) card

— QPC742F Floppy Disk Interface (FDI) card

— NTND15 Floppy Disk Unit (FDU)

— NTND16 Multi Disk Unit (MDU)

Note 1: With X11 release 18 and later, only STE, 21E, and RT systems support the optional FDI and FDU. All other systems require the MSI/EMSI and MDU.

Note 2: If you are replacing an NTND09Bx 6-MB card with the NTND09Cx 12 MB memory card, use "Procedure 6: Performing a parallel reload" on page 101 to enter parallel mode *before* changing the card. You **must** sysload for the changes to take effect. Refer to *Meridian 1 hardware replacement* (553-3001-520) for complete instructions.

The X11 release 18 feature Multiple Appearance DN Redirection Prime automatically assigns a MADN Redirection Prime (MARP) TN when you convert your system to X11 release 18. When converting to X11 release 18, MARP is not activated until you do so in LD 17. Refer to *X11 features and services* and *X11 input/output guide* (553-3001-400) for a complete description.

Overlay Cache Memory allocates memory buffers for quicker overlay storage and retrieval. When converting from a previous release, this feature is not enabled until you do so in LD 17. However, when converting to a higher issue of X11 release 18, some memory allocation changes may take place. This does affect the amount of memory used and available when converting your system. Refer to *X11 features and services* and *X11 input/output guide* (553-3001-400) for a complete description.

Existing AML (CSL) and DCH ports keep their device number and are given an equivalent logical number and a card type (CTYP) of ESDI or DCHI. For example: CSL 9 becomes AML 9 with device number of 9 and CTYP of ESDI; DCH 13 becomes DCH 13 with device number of 13 and CTYP of DCHI.

Asynchronous ESDI TTY ports on QPC513 ESDI cards are removed from the database.

Normal SDI ports are assumed to be on an SDI2 card type. The card type will have to be updated manually for other SDI card types. This can only be done by using the ADAN prompt with the OUT and NEW commands in LD 17.

Asynchronous ESDI TTY ports on QPC757 DCHI cards convert to TTY ports with CTYP of DCHI.

X11 release 19

X11 release 19 introduces system management changes. Refer to *X11 software management* (553-3001-300) and *X11 input/output guide* (553-3001-400) for details regarding the enhancements. The following are some of the system features available with X11 release 19 and later.

— Linked overlay programs (LD 10, LD 11, LD 20, LD 32)

— Program restructuring

— Fault management

— Feature improvements

- CPND, LAPW, and BARS
- Speed Call and Steering Codes
- History file, Log file, and session file
- I/O port lockout recovery

— System message lookup tool (option 81)

— Multi-user login

— Single Terminal Access

— Voice Mailbox Administration

With Voice Mailbox Administration (VMBA), the Meridian 1 system administrator uses Meridian 1 telephone administration LD 10 and LD 11 to administer and maintain voice mailboxes (VMBs).

X11 release 19 introduces the system option 61C. Refer to system documentation for complete information and hardware requirements.

X11 release 19 requires the three-disk configuration for XT and 71 systems.

If any patches reside in X11 release 19 software, the following information will be printed at sysload.

```
PAT000    Inserted
PAT001    Inserted
PAT003    Inserted
```

Use LD 22 (TYPE = ISSP) to view the following printout of system patch information.

Num	Name	PRS	ID	OVL Packages
+PAT00D	JACTEST1	BV01234	MTV2345	
+PAT001	AATEST	BV01345	MTV2346	
–PAT002	MTVPKG68	BV01456	MTV2567	2
+PAT003	TIMEPCH	BV02678	MTV2890	22

The plus (+) sign indicates that the patch will be installed. The minus (–) sign indicates that the patch will not be installed. Patches will not be installed when the code that is being patched is not propagated on the system. Refer to *X11 input/output guide* (553-3001-400) should any other messages appear.

X11 release 20

X11 release 20 supports Automatic Inline Conversion from X11 release 19, X81 Phase 7 and X81 Phase 8.

Option 21E and STE systems upgrading to X11 release 20 must use an NTND01CA ICM card. Verify the version of the ICM card in your system and replace it (if it is not version CA or later) before performing any software upgrade procedures. Refer to *Product compatibility* (553-3001-156) for a complete list of compatible versions.

Option 81 systems require additional memory on the NT6D66 CP cards. Procedures for upgrading memory are located in “Procedure 10: Increasing memory” on page 169.

The 48MB memory card is required for option 81 with X11 release 20 and later. It is recommended for the option 51C and 61C systems.

Option 51 and 61 systems require 4 disks to upgrade to X11 release 20 or later. Refer to “Procedure 5: Using a three-disk or four-disk configuration” on page 93 for complete information.

X11 release 21

X11 release 21 supports Automatic Inline Conversion from X11 release 19, 20, X81 Phase 7 and X81 Phase 8.

X11 release 21 introduces the NT9D19 CP card for options 81 and 81C. The NT9D19 CP card is a 68040 call processor with greater real time capability than the 68030 based NT6D66 CP card. Refer to Table 2 for CP card memory requirements.

Software installation must be independently performed on each side of a dual CPU system for the 68040 Call Processor.

> ***Note:*** NT9D19 CP cards require release 21 software with software generic 1911 for option 81 and 81C.

Table 2
Release 21 memory requirements

	Minimum memory requirement	
System type	**68030 CP card**	**68040 CP card**
option 51C	24 MB	not supported
option 61C	24 MB	not supported
option 81/81C	48 MB	48 MB

X11 release 22

X11 release 22 supports Atomatic Inline Conversion from X11 release 19, 20, 21, X81 Phase 7 and X81 Phase 8 in system options 51C, 61C, 81, and 81C. It also introduces the NT9D19 CP card for options 51C and 61C.

To install X11 release 22 software, your system must be operating with the required CP card memory. For systems equipped with NT6D66 CP cards, the minimum memory requirement is 48 MB. For systems equipped with NT9D19 CP cards, options 51C and 61C require a minimum of 48 MB and options 81 and 81C require a minimum of 64 MB. Refer to Table 2 for supported call processors and memory configurations for release 22.

> ***Note:*** In market regions where the NT9D19 64 MB CP card is not available, options 81 and 81C require NT9D19 96 MB CP cards to run X11 release 22.

Table 3
Release 22 memory requirements

	Minimum memory requirement	
System type	**68030 CP card**	**68040 CP card**
option 51C	48 MB	48 MB
option 61C	48 MB	48 MB
option 81/81C	48 MB	64 MB

If your system requires additional memory to install X11 release 22 software, refer to “Procedure 10: Increasing memory” on page 169.

Software installation must be independently performed on each side of a dual CPU system equipped with NT9D19 CP cards.

X11 release 23

X11 release 23 support Automatic Inline Conversion from X11 release 19, 20, 21, 22, X81 Phase 7 and X81 Phase 8 in system options 51C, 61C, 81 and 81C. It also introduces the NT5D10 (68060) Call Processor card, and the NT5D61 Input Output Disk Unit with CD-ROM (IODU/C) card.

> ***Note:*** The NT5D03 (68060E) Call Processor card is supported with software release 23.5X and later.

CP card options

With release 23, option 51C, 61C, 81 and 81C systems can use any one of the following four CP based processors available:

- NT5D03 CP card (68060E) for release 23.5X and later
- NT5D10 CP card (68060)
- NT9D19 CP card (68040)
- NT6D66 CP card (68030)

Memory requirements are determined by the system type and X11 software release level. Refer to Table 4 for the release 23 CP card memory requirements.

Table 4
Release 23 memory requirements

	Minimum memory requirement			
System type	**68030 CP card***	**68040 CP card**	**68060 CP card**	**68060E CP card**
option 51C	48 MB	48 MB	48 MB	48 MB
option 61C	48 MB	64 MB	64 MB	64 MB
option 81/81C**	48 MB	80 MB	80 MB	80 MB

Note: *The 68030 CP card is not available for new system sales or system upgrades

Note: **Some systems may require a CP card upgrade (refer to the release 23.5x General Release Bulletin).

Table 2 lists the X11 release 23 software generics for each system type.

Table 5
Release 23 software generics

System type	Software generic with 68030 CP card	Software generic with 68040 CP card	Software generic with 68060 CP card	Software generic with 68060E CP card
option 51C	1711	2211	2411	2811
option 61C	1811	2311	2511	2911
option 81/81C	1611	1911	2611	3011

NT5D61 IODU/C card

The NT5D61 Input/Output Disk Unit with CD-ROM (IODU/C) card introduces a CD ROM multi-drive unit for options 51C, 61C, 81, and 81C systems. The IODU/C card uses a security device and key codes to activate software features and ISM limits for new installations and upgrades. The IODU/C uses an industry-standard 2 MB floppy drive rather than the 4 MB floppy drive used in the existing CMDU and IOP/CMDU cards.

The IODU/C card is available in two vintages:

- NT5D61AA: includes hard drive, 2 MB floppy drive, and CD-ROM drive
- NT5D61BA: includes hard drive and 2 MB floppy drive

Note: NT5D61AA is mandatory for option 51C systems. Option 61C, 81, and 61C systems require at least one NT5D61AA IODU/C card to perform software installation from CD-ROM.

In the NT5D21 Core/Net module, the IODU/C occupies slots 17, 18, and 19. In the NT9D11 Core/Net and NT6D60 Core modules, the IODU/C card occupies slots 16, 17, and 18.

The primary differences between the IODU/C and IOP/CMDU cards are listed in Table 6.

Table 6
IODU/C and IOP/CMDU differences

	IODU/C	**IOP/CMDU**
Software installation	Reads generic software from a CD-ROM	Reads customized software from a 4 MB floppy diskette media
Feature activation	Controlled by a security device and keycode	Controlled by a security cartridge
Security device replacement	The security device on the IODU/C is replaced only in the unlikely event of failure	The security cartridge is replaced with each software order
Feature expansion/ ISM limit change	Requires new keycode only.	Requires shipment and reload of custom software and security cartridge.
2MB floppy media	Supports 2 MB floppy media. For large databases, the IODU/C supports multiple floppy diskette backup.	Supports 4 MB floppy media.

X11 release 24

X11 release 24 supports Automatic Inline Conversion from X11 release 19, 20, 21, 22, 23, X81 Phase 7 and X81 Phase 8 in system options 51C, 61C, 81or 81C. Software installation and conversion is supported on CD-ROM using an IODU/C drive.

With release 24, option 51C, 61C, 81, and 81C systems can use any of the following processors available:

- 68060E NT5D03 CP card
- 68060 NT5D10 CP card
- 68040 NT9D19 CP card

Memory requirements are determined by the system type and X11 software release level. Refer to Table 7 for the release 24 CP card memory requirements.

Table 7
Release 24 memory requirements

	Minimum memory requirement		
System type	**68040 CP card***	**68060 CP card**	**68060E CP card**
option 51C	48 MB	48 MB	48 MB
option 61C	64 MB	64 MB	64 MB
option 81/81C	80 MB**	80 MB	80 MB

Note: *The 68040 CP card is not available for new system sales.

Note: The 96 MB 68040 CP card is not supported on option 81/81C systems running X11 release 24. Option 81/81C systems using 96 MB 68040 cards must perform a memory upgrade or card replacement.

Table 8 lists the X11 release 24 software generics for each system type.

Table 8
Release 24 software generics

System type	Software generic with 68040 CP card	Software generic with 68060 CP card	Software generic with 68060E CP card
option 51C	2211	2411	2811
option 61C	2311	2511	2911
option 81/81C	1911	2611	3011*
Note: *Software option 298 is required on Option 81 systems, and software option 299 is required on Option 81C systems.			

X11 release supported by machine type

Table 9 shows the X11 release associated with each system and its available release levels. The last two digits in the “X11 system number” column indicate the software generic (X11); the first one or two digits indicate the system type. For example, the system number for system option 81C is 1911.

Table 9
Software generic by machine type (Part 1 of 2)

System type	X11 system number	Lowest supported X11 release	Highest supported X11 release
ST	1011	9	17
STE	1511	18	21
NT	1111	8	21
XT	1211	8	21
RT	1311	12	21
Option 21	1011	15	17
Option 21E	1511	18	21
Option 51	1111	15	21
Option 51C equipped with NT6D66 CP card	1711	20	23
Option 51C equipped with NT9D19 CP Card	2211	22	24
Option 51C equipped with NT5D10 CP card	2411	23	24
Option 51C equipped with NT5D03 CP card	2811	23.5X	24
Option 61	1111	15	21
Option 61C equipped with NT6D66 CP card	1811	19	24

Table 9
Software generic by machine type (Part 2 of 2)

System type	X11 system number	Lowest supported X11 release	Highest supported X11 release
Option 61C equipped with NT9D19 CP card	2311	22	24
Option 61C equipped with NT5D10 CP card	2511	23	24
Option 61C equipped with NT5D03 CP card	2911	23.5X	24
Option 81 equipped with NT6D66 CP card*	1611	18	24
Option 81 equipped with NT9D19 CP card*	1911	21	24
Option 71	1211	15	21
Option 81 equipped with NT5D10 CP card*	2611	23	24
Option 81 equipped with NT5D03 CP card*	3011	23.5X	24
Option 81C equipped NT6D66 CP card**	1611	21	24
Option 81C equipped with NT9D19 CP card**	1911	21	24
Option 81C equipped with NT5D10 CP card**	2611	23	24
Option 81C equipped with NT5D03 CP card**	3011	23.5X	24

Note 1: *Option 81 systems require software option 298.

Note 2: **Option 81C systems require software option 299.

Procedure 1: **Preconversion procedure**

Read the Conversion notes section in this document before beginning your conversion procedures. The conversion procedure used depends on the release of the **Source** and **Target** software. Make sure you have all the necessary hardware and software. Save a copy of your data dumped **Source** software until you are sure that all site data converted successfully.

Use this procedure to begin all software conversions. When you complete this procedure, refer to “Procedure 3: Convert from one X11 release to a later release” on page 47, “Procedure 4: Convert to later issue of the same release” on page 89, “Procedure 6: Performing a parallel reload” on page 101, “Procedure 7: CD-ROM software conversion” on page 131, or appropriate. After you have completed your conversion, perform the post-conversion steps in “Procedure 12: Postconversion procedure” on page 301.

The following items should be available before proceeding:

— the Controlled Release Bulletin for the new software

— the appropriate software and conversion media

— the CD-ROM, disk or tape drive (as required)

— 2 MB MDU for system option 71 and XT machines with X11 releases 15, 16, and 17

— 3.5-inch 2 MB High Density (HD) floppy disks for X11 release 15 through 17

— 3.5-inch 4 MB Extra High Density (ED) floppy disks for X11 release 18 and later

— 4 MB MDU or CMDU for X11 release 18 and later

— 4 MB IOP/CMDU or 2 MB IODU/C for X11 release 23 and later

— QPC584 F4, K, or higher, or NT9D34 for the three-disk configuration with X11 release 16 and 17

— QPC584L or NT9D34 for NT, XT, 51, 61, and 71 systems with X11 release 18 and later

— the security device(s) and keycodes required for systems equipped with IODU/C

— the security data cartridges required for each release if the system is equipped with disks (see “Procedure 8: Installing new data cartridges and option packages” on page 159)

— a new ROM daughterboard if required for an intermediate release or the **Target** release (see “Procedure 9: Install a new Read Only Memory card” on page 163)

— a temporary SDI card and a local TTY or remote TTY modem required to perform parallel reload in dual CPU systems

— new memory cards and CMAs, if required

Preconversion steps

1 Perform an overall system check. Make sure the system is performing normal call processing.

2 Get software information from LD 22.

```
LD 22
REQ     ISS
****    to exit overlay
```

With X11 release 16.65 and later, patches do not need to be removed prior to conversion. When datadumping (EDD), an EHM500 message is printed, rather than a list of patch numbers.

If converting from 15.53, 14.41, or earlier, you must have the patches removed prior to converting. Data corruption may occur if you do not remove the patches prior to conversion.

If a patch is included in your software and you are running on release 19 or higher, a plus sign (+) will appear next to the software issue number in LD 22.

3 Load the configuration record (LD 17) to find the storage currently available in the Protected and Unprotected Data Store (PDATA and UDATA). Check the General Release Bulletin to see if additional memory cards are required for the new software or for any option packages being added.

4 Print system data listed in Table 10. Verify all information is correct. Make corrections if necessary.

5 If additional memory is required for the conversion, change the MSPT, MEM, or MTYP prompts in the configuration record (LD 17). See “Procedure 10: Increasing memory” on page 169.

6 With X11 release 14 and later, perform a template audit. The template audit reviews the templates in your system and cleans up any duplicate or corrupted templates. The following is an example of the information generated by the system during the audit. **This may take an extended period of time on large systems**. It is recommended that it be run during a low traffic period.

> **WARNING**
> Do not abort this overlay until the audit is complete. If the overlay is interrupted, data will be corrupted.

LD 01 The audit begins as soon as LD 01 is entered.

```
TEMPLATE AUDIT
STARTING PBX TEMPLATE SCAN
TEMPLATE 0001 USER COUNT LOW        CHECKSUM OK
TEMPLATE 0002 USER COUNT HIGH       CHECKSUM OK
TEMPLATE 0003 NO USERS FOUND

STARTING SL1 TEMPLATE SCAN
TEMPLATE 0001 USER COUNT OK         CHECKSUM OK
•
•
TEMPLATE 0120 USER COUNT OK         CHECKSUM OK
TEMPLATE AUDIT COMPLETE
```

7 To ensure backup, perform a data dump to the **Source** system media currently in the drive. If the data dump is not successful, do not proceed with the conversion. The data dump problem must be corrected. Contact your NT technical support. If an MDU is equipped, disable and remove the QPC584 MSI card. Turn switch 3, position 4 (SW 3-4) ON. Reinsert and enable the card.

LD 43

EDD	DATADUMP COMPLETE (or DATABASE BACKUP COMPLETE) is printed when the data dump has been successfully completed. Investigate any EDD messages. Refer to *X11 input/output guide* (553-3001-400).

8 If parallel reload is to be used during the conversion, go to “Procedure 6: Performing a parallel reload” on page 101 or “Procedure 7: CD-ROM software conversion” on page 131. Be sure to perform the correct parallel reload procedure for your system.

Note: To monitor the CPUs during parallel reload procedures, install a temporary Serial Data Interface (SDI) card, and connect a local TTY (or modem for remote TTY access). Refer to the parallel reload procedures for more information.

If parallel reload is not required (single CPU system) then perform one or more of the following conversion procedures. Remember to perform the post-conversion steps (“Procedure 12: Postconversion procedure” on page 301) to complete the conversion.

— “Procedure 2: Converting from X11 release 8 or 9 to X11 release 10” on page 43

— “Procedure 3: Convert from one X11 release to a later release” on page 47

— “Procedure 4: Convert to later issue of the same release” on page 89

— “Procedure 5: Using a three-disk or four-disk configuration” on page 93

— “Procedure 8: Installing new data cartridges and option packages” on page 159

— “Procedure 9: Install a new Read Only Memory card” on page 163

— “Procedure 10: Increasing memory” on page 169

Items marked with asterisks (*) are required printout for conversion. Other items are recommended for a total system status.

Table 10
Print site data (Part 1 of 2)

Site data	Print command	
Terminal blocks for all TNs	LD 20	
	REQ	PRT
	TYPE	TNB
	CUST	<cr>
Directory Numbers	LD 20 (LD 22 prior to Release 16)	
	REQ	PRT
	TYPE	DNB
	CUST	<cr>
Attendant Console data block for all customers	LD 20	LD 20
	REQ	PRT
	TYPE	ATT, 2250
	CUST	<cr>
*Customer data block for all customers	LD 21	LD 21
	REQ	PRT
	TYPE	CDB
	CUST	<cr>
Route data block for all customers	LD 21	
	REQ	PRT
	TYPE	RDB
	CUST	Customer number
	ROUT	<cr>
	ACOD	<cr>
*Configuration Record	LD 22	
	REQ	PRT
	TYPE	CFN

Table 10
Print site data (Part 2 of 2)

Site data	Print command	
*Software packages	LD 22	
	REQ	PRT
	TYPE	PKG
*Software issue, ROM and tape ID	LD 22	
	REQ	ISS
	REQ	ROM
	REQ	TID
* Peripheral software versions	LD 22	
	REQ	PRT
	TYPE	PSWV
ACD data block for all customers	LD 23	
	REQ	PRT
	TYPE	ACD
	CUST	Customer Number
	ACDN	ACD DN (or <CR>)
Superloop card IDs and software version (peripheral controller, superloop network and controller cards)	LD 32	
	.	IDC loop
Multi-purpose ISDN Signaling Processor (MISP) card	LD 27	
	REQ	PRT
	TYPE	MISP
	LOOP	loop number (0-158)
	APPL	<cr>
	PH	<cr>
DTI/PRI data block for all customers	LD 73	
	REQ	PRT
	TYPE	DDB

Note: Items marked with asterisks (*) are required printout for conversion. Other items are recommended for a total system status.

Procedure 2:
Converting from X11 release 8 or 9 to X11 release 10

This procedure assumes that the **Source** software is X11 release 8 or 9, and you are currently using disk drives. For systems with earlier software releases, use the appropriate Controlled Release Bulletin.

Refer to *Upgrade system installation through X11 release 21* (553-3001-250) to determine if the following hardware is required.

— ROM cards for intermediate and Target releases

— Data cartridges for intermediate and Target releases when equipped with disk drives

— Additional memory cards

— Floppy and/or hard disk drive assemblies required for X11 release 10.

CAUTION
If the sysload is not successful, do not proceed with the conversion.
Reinstall your **Source** media, replace any changed hardware, and reload the system. Contact your technical support.

Convert to X11 release 10

1 Perform the steps in the pre-conversion procedure (“Procedure 1: Preconversion procedure” on page 35) if you have not already done so.

2 If an MDU or SMDU is equipped, disable and remove the QPC584 MSI or NT9D34 EMSI card. For the QPC584 card, turn position 4 on switch 3 (SW3-4) OFF. For the NT9D34 card, turn position 4 on switch 2 (SW2-4) OFF.

3 Reinsert the card, and set the ENB/DIS faceplate switch to ENB.

4 Insert the conversion disk into drive A, and load the conversion program (LD 66).

5 When the “CDD000” prompt is given, be sure the messages output to the TTY indicate the desired release, and remove the conversion disk.

6 Insert the **Target** disks. Be sure the **Target** disk labels match the conversion disk labels. System disks go into drives A, and B. **Both Target disks must be inserted.**

7 Set the QPC584, NT9D34, or QPC742 card ENB/DIS faceplate switch to DIS.

8 Remove the QPC584, NT9D34, or QPC742 card and install the new data cartridge.

9 Reinsert the QPC584, NT9D34, or QPC742 card and set the ENB/DIS switch to ENB.

10 Start conversion data dump with the command **CDD.**

11 When the conversion is complete, **DONE** is printed on your TTY.

12 In a dual CPU system, perform a sysload in CPU 1 by pressing the CPU RLD button (see “Procedure 6: Performing a parallel reload” on page 101).

In a single CPU system, perform a sysload by pressing the RLD button. The data is automatically converted.

13 When the sysload and initialization are complete, perform a data dump to the disks inserted in step 6.

14 Repeat steps 4 through 13 for each intermediate software release, if necessary.

After you have converted to X11 release 10, use “Procedure 3: Convert from one X11 release to a later release” on page 47 to convert to X11 release 12 or later.

Procedure 3:
Convert from one X11 release to a later release

Automatic inline conversion

The procedures in this section describe how to convert from one X11 release to a later release using Automatic Inline Conversion. Automatic Inline Conversion is a process of software conversion between individual releases that does not require additional hardware. Refer to Table 1 on page 5 for a list of X11 releases supported by Automatic Inline Conversion.

> ***Note:*** To perform these procedures, your **Source** software must be X11 release 10 or later.

To convert software in option 51C systems, refer to:

- “Convert with Automatic Inline Conversion: Option 51C (without IODU/C)” on page 48 or “Option 51C software conversion” on page 147

To convert software in system options 61C, 81, and 81C, refer to:

- “Procedure 6: Performing a parallel reload” on page 101 or “Procedure 7: CD-ROM software conversion” on page 131

To convert software in systems other than 51C, 61C, 81, and 81C, refer to

- “Convert with Automatic Inline Conversion: Option 51C (without IODU/C)” on page 48
- “Convert without Automatic Inline Conversion (X11 releases 12 and 13)” on page 53

Note: Automatic Inline Conversion from X11 release 10 is supported to X11 release 14 or 15 only. To go to X11 release 12 or 13, you must go through X11 release 11 first, using the procedure on page 53. You can use Automatic Inline from X11 release 11 to 12 or later.

Convert with Automatic Inline Conversion: Option 51C (without IODU/C)

The option 51C is available with X11 release 20 and later.

This procedure is for software conversions and upissues only. It is not an installation, upgrade, or maintenance procedure. Refer to system documentation for complete details regarding the option 51C.

Before converting software, determine whether your system requires additional memory. If your system is not operating with the minimum memory requirement, the CP card memory must be upgraded before continuing with this conversion procedure. Procedures for upgrading memory are located in “Procedure 10: Increasing memory” on page 169.

1 Perform a data dump:

LD 43	to load the program
EDD	to begin the data dump

When “DATABASE BACKUP COMPLETE” or “DATADUMP COMPLETE” displays on the terminal, proceed with the next step.

> **CAUTION**
> If the data dump is not successful, do not continue; contact your technical support organization. A data dump problem must be corrected before proceeding.

********	to exit the program

2 Connect a terminal to the CPSI port in the Core/Net module at J25 on the I/O panel at the back of the module. Be sure is configured as follows. The recommended baud rate is 9600, the same as the CPSI port.

- 7 data bits
- 1 stop bit
- Space parity
- Full duplex
- XON protocol

3 Set the END/DIS switch on the IOP/CMDU to DIS. Remove the IOP/CMDU and replace the QMM42 Data Cartridge with the **Target** cartridge.

4 Reset the IOP/CMDU and set the faceplate switch to ENB.

5 Install Target installation disk (labeled A1) into the IOP/CMDU.

6 Press the MAN RST button on the CP card. A sysload (cold start) will begin.

7 When the Software Installation Tool Main Menu appears, select the following options in sequence when you are prompted to do so:

<a>	to install software, CP-BOOT ROM and IOP-ROM
<y>	to start installation
<a>	to continue with the upgrade

8 Insert disk 2 from the software upgrade package into the CMDU or IOP/CMDU card. Follow the screen directions requiring disk insertion.

9 Following the software installation, install the CP-BOOT and IOP-ROMs. From the menu select the following:

<a>	to continue with ROM upgrade
<a>	to continue with ROM upgrade (CP-BOOT ROM)
<y>	to start installation
<a>	to continue with ROM upgrade (IOP-ROM)

10 Remove any diskettes from the CMDU or IOP/CMDU.

11 Select the following options to quit and reload the system:

<q>	to quit
<y>	to confirm quit
<a>	to reboot the system

The system will automatically perform a sysload.

Note: The following message appears on the system terminal:

DATA CONVERSION
X11 RELEASE xx.xx TO RELEASE 22.xx

12 Verify that the "DONE" message appears on the system terminal.

Note: The SYSTEM INI message may take 70 seconds or more to appear.

13 Verify CPU and CNI functionality:

LD 135	to load the overlay
STAT CPU	to check the CPU status
STAT CNI	to verify CNI functionality
********	to exit the program

14 Insert the release 24 software B1 diskette into the CMDU or IOP/CMDU.

15 Load the Equipment Data Dump Program (LD 43). At the prompt, enter

LD 43	to load the program

16 When "EDD000" appears on the terminal, enter

EDD	to begin the data dump

17 When "DATABASE BACKUP COMPLETE" or "DATADUMP COMPLETE" appears on the terminal, enter

********	to exit the program

CAUTION

If the data dump is not successful, do not continue; contact your technical support organization. A data dump problem must be corrected before proceeding.

Convert with Automatic Inline Conversion (X11 release 14 and later)

1 Perform the steps in the pre-conversion procedure (“Procedure 1: Preconversion procedure” on page 35) if you have not already done so.

2 Manually load LD 43 from the **Source** disk. When you see EDD000, disable the faceplate switch on the QPC584, NT9D34, or QPC742 card.

3 Remove the QPC584 or NT9D34 card and:

- for QPC584 cards, set position 4 on switch 3 (SW3-4) to OFF
- for NT9D34 cards, set position 4 on switch 2 (SW2-4) to OFF

4 Install the new data cartridge on the QPC584, NT9D34, or QPC742 card in the CPU (in dual-CPU systems, install the cartridge on the card in CPU 1), and reinsert the card.

5 Set the QPC584, NT9D34, or QPC742 card ENB/DIS faceplate switch to ENB.

6 Remove both **Source** disks and insert both **Target** disks. Dump **to** the **Target** disks.

DATADUMP COMPLETE	Output when data dump is successful.
BACKING UP DISK B1	Output when hard drive is equipped.
EDD034	
BACKUP FAILED	This appears when SW3-4 on the QPC584 or QPC742 card is OFF, or when SW2-4 on the NT9D34 card is OFF (see step 3, above). This is not an error.
[.]	Signifies completion of data dump.

If the data dump is not successful, do not proceed with the conversion. Contact your technical support.

7 Replace the ROM card if necessary. See “Procedure 9: Install a new Read Only Memory card” on page 163.

8 Replace the QPC583 or NTND09BA memory card with the NTND09CA 12 MB memory card.

9 On a dual CPU system, perform a sysload on CPU 1 only, by pressing the RLD button.

On a single CPU system, perform a sysload by pressing the RLD button. The data is automatically converted.

10 The following sysload and initialization messages are output on the TTY. If the sysload or initialization is not successful, do not proceed with the conversion. Contact your technical support personnel. If you need to return to the original software, reinstall your source disks.

SYS000
SYS092
SYS093
SYS511
SYS091
SYS090

DONE

INI000

CAUTION
System information will be lost.
With Incremental Software Management (ISM) in X11 release 15.55 and higher, if SYS message 4327, 4328, 4329, or 4330 appears at sysload, reload **Source** system disks and restore any changed hardware. Order ISM disks with sufficient system parameters configured.

11 Perform a data dump to two backup disk sets. Login and load the data dump program (LD 43). Insert the backup disks and dump **to** the disks.

EDD	DATADUMP COMPLETE is output when the data dump has been successfully completed.
BACKUP FAILED	This appears when SW3-4 on the QPC584 or QPC742 card is OFF, or when SW2-4 on the NT9D34 card is OFF. This is not an error.
[.]	

If you are doing parallel reload, go to “Completing the parallel reload on the NT/RT/61” on page 118.

If you are on a single CPU system, go to “Procedure 12: Postconversion procedure” on page 301.

Convert without Automatic Inline Conversion (X11 releases 12 and 13)

1 Perform the steps in the pre-conversion procedure (“Procedure 1: Preconversion procedure” on page 35) if you have not already done so.

2 If an MDU or SMDU is equipped, remove the QPC584 or NT9D34 card and:

- for QPC584 cards, set position 4 on switch 3 (SW3-4) to OFF
- for NT9D34 cards, set position 4 on switch 2 (SW2-4) to OFF

3 Reinsert the card, and set the QPC584 or NT9D34 card ENB/DIS faceplate switch to ENB.

4 Insert the conversion disk in drive A.

5 Load the Conversion program (LD 66).

6 When the “CDD000” prompt is given, be sure the messages output to the TTY indicate the desired release, and remove the conversion disk.

7 Insert the **Target** disks. Be sure the **Target** disk labels match the conversion disk labels. System disks goes into drives A, and B. **Both Target disks must be inserted.**

8 Set the QPC584, NT9D34, or QPC742 ENB/DIS faceplate switch to DIS.

9 Remove the QPC584, NT9D34, or QPC742 card and install the new data cartridge.

10 Reinsert the card and set the ENB/DIS faceplate switch to ENB.

11 Start conversion data dump with the command **CDD.**

12 When the conversion data dump is complete, **DONE** is printed on the TTY. Replace the ROM card if necessary. See “Procedure 9: Install a new Read Only Memory card” on page 163.

13 Replace the QPC583 or NTND09BA memory card with the NTND09CA 12 MB memory card.

14 For dual CPU systems, perform a sysload in CPU 1 only by pressing the CPU RLD button (see “Procedure 6: Performing a parallel reload” on page 101).

15 When the sysload and initialization are complete, perform a data dump to the **Target** disks inserted in step 7.

CAUTION
If the sysload is not successful, do not proceed with the conversion.
Reinstall your **Source** media, replace any changed hardware, and reload the system. Contact your technical support.

If you are doing parallel reload, go to “Completing the parallel reload on the NT/RT/61” on page 118.

If you are on a single CPU system, go to “Procedure 12: Postconversion procedure” on page 301.

Converting X11 release 15 through 17 to release 18 or 19

The conversion procedures in this section require hardware upgrades as well as software conversion. Be sure to follow the procedure for your system carefully to ensure complete system conversion.

X11 release 15, 16, or 17 must be the **Source** software release before converting to X11 release 18. To convert to X11 release 19 your **Source** software must be X11 release 17. For conversion from X11 release 18 to 19, refer to “Procedure 6: Performing a parallel reload” on page 101.

This procedure *does not* include upgrade procedures to the option 81 (X11 release 18) or the option 61C (X11 release 19). Refer to *Upgrade system installation* (553-3001-250) for complete upgrade information.

These conversions require upgraded memory for the NT, RT, XT, 61, and 71. The following hardware changes are required.

— NTND08 ROM

— QPC584L Mass Storage Interface (MSI)

— QPC742F Floppy Disk Interface (FDI)

— NTND09Bx 6-MB memory card
NTND09Cx 12-MB memory card

— NTND10 CMA

— NTND16 Multi Disk Unit (MDU)

— NTND15 Floppy Disk Unit (FDU)

Note 1: Two NTND80 cables are required for the NTND16 MDU. Be sure this cable is available before beginning your conversion.

Note 2: With X11 release 18 and later, only STE, 21E, and RT systems support optional FDI/FDU (QPC742F FDI, NTND15 FDU). All others require the MSI/MDU.

When performing these procedures you will install the **Source** software to verify system data, then convert to the **Target** X11 release 18 hardware and software.

> **CAUTION**
> **Hardware changes must be performed.**
> To return to the previous release, you must reseat the original hardware.

Note: The option 61C is available with X11 release 19 and later only. Refer to system documentation for information regarding the option 61C and option 81 systems.

Convert the NT/61 to X11 release 18

1 Perform the pre-conversion steps as shown in "Procedure 1: Preconversion procedure" on page 35.

2 Load LD 35 and get the status of the CPU, CMA, extenders, and memory. Ensure all common equipment is enabled.

LD 35	
STAT CPU	Get the status of the CPUs.
STAT CMA	Get CMA status.
STAT EXT	Get the extender status.
STAT MEM	Get the memory status.

3 Test and switch CPUs.

TCPU	Test the CPUs.
SCPU	Switch the CPUs.

4 Get the status of the other CPU, CMA, extenders, and memory. Ensure all common equipment is enabled.

STAT CPU	Get the status of the CPUs.
STAT CMA	Get CMA status.
STAT EXT	Get the extender status.

5 Ensure CPU 0 is enabled (CPU 1 is idle).

6 If equipped, set the QPC84 Power Monitor card (in CPU cabinet) ENL/DIS faceplate switch to DIS. Do not remove the card.

7 Place CPU 0 into Maintenance by setting the MAINT/NORM faceplate switch to MAINT.

8 List the enabled memories. Then disable the memory and CMA in CPU 1.

LENL	List enabled memory.
DIS 10	Disable CPU 1 memory.
DIS CMA 1	Disable CMA 1.

9 Type ******** to exit overlay.

10 Type **DIST**. This software-disables the QPC584/QPC742 in CPU 0.

11 On CPU 0, set the QPC584/QPC742 ENB/DIS faceplate switch to DIS.

12 Get a temporary Serial Data Interface card. For option 61 systems, a Serial Data Interface paddle board may be used. Use a spare. Verify the baud rate. If it does not match the TTY, output characters may be garbled. Be sure the card is configured exactly as the existing maintenance TTY device.

13 Place the temporary SDI card in a vacant slot in CPU 1. If using the SDI paddle board, place it in slot 12 in the rear of CPU 1.

14 Set the temporary SDI card ENB/DIS faceplate switch to ENB. Connect a local TTY, or a modem for a remote TTY, to the temporary SDI card.

15 If an MDU is equipped, remove the QPC584 card from CPU 1 and set switch 3, position 4 (SW3-4) to OFF.

16 Set the MAINT/NORM switch to MAINT in CPU 1. This will cause a sysload. If the sysload does not begin, press the RLD button on CMA 1 **only**.

The following messages will print out on your TTY. The CMA and SDI lights will go out, and the disk drives will run. The following SYS messages will appear (may differ slightly depending on the X11 release). Check for dial tone following the DONE and INI000 messages.

SYS000
SYS092
SYS093
SYS511
SYS091
SYS090
SYSLOAD RLS: xx
ISSUE: x

DONE

INI000

Note: When sysload is complete, midnight (daily) routines will begin. Logging in to the system temporarily interrupts the midnight routines.

17 Load LD 43 from the **Source** disk.

LD 43
EDD000 Indicates LD 43 is loaded.

18 When EDD000 appears, remove the QPC584/QPC742 card from CPU 1.

19 Install the Release 18 data cartridge on the QPC584L.
Set switches 1, 5, and 7 to ON. Insert the QPC584L MSI in the same slot on CPU 1.

20 Remove the original MDU/FDU.

21 Insert the NTND16 MDU.
Do not place the MDU next to a power converter.

Note: The MDU requires power and three adjacent card slots. Refer to *Disk drive upgrade procedures* (553-3001-251).

22 Attach the cables between the MDU and the MSI on CPU 1. Set the QPC584L ENB/DIS faceplate switch to ENB.

23 Insert **Target** A1 and B1 disks. Enter **EDD <CR>** to initiate datadump. Be sure the datadump is successful before moving on.

24 Set the CMA 1 ENB/DIS faceplate switch to DIS. Disconnect the CMA cables from the faceplate. **Disconnect the top cable first.**
Remove the CMA from CPU 1.

25 Set the NTND10 CMA card ENB/DIS faceplate switch to DIS.
Verify that pins 1 and 2 are set on jumper J3 on the NTND10 CMA.

26 Insert the NTND10 CMA card into CPU 1.
Connect the cables to the CMA card. **Connect the bottom cable first.**

27 Remove the Memory card from CPU 1.

28 Insert the NTND09 Memory card in the same slot.

29 Replace the original ROM on CPU 1 with the NTND08 ROM. Refer to "Procedure 9: Install a new Read Only Memory card" on page 163 for ROM replacement instructions.

30 Set the NTND10 CMA 1 ENB/DIS faceplate switch to ENB.

31 An automatic reload may occur at this point. If it does not, press the Reload button on CPU 1. The following messages print out on your TTY. Verify any other messages.

```
SYS000
SYS0092
SYS0093 INHIBITS 000012A
SYS0511
SYS0091
SYS0090
CONV RLS x ISSUE xx TO RLS x ISSUE xx

CONVERSION PROCESS COMPLETED
DONE
INI000
```

Note: When the sysload is complete, midnight routines will begin. Log in to the system to stop the procedures. You cannot interrupt LD 43.

32 Set the time and date in LD 02. Note that if Call Detail Recording (CDR) is used, system message ERR225 will appear. This is normal.

```
LD 02
STAD dd mm yyyy hh mm ss        Set Time and Date.
```

dd = day (for example, 05 for the fifth)
mm = month (for example, 09 for September)
yyyy = year (2 or 4 digits, for example 92 or 1992)
hh = hour (in 24-hour time, for example, 13:00 for 1:00 pm)
mm = minute (for example, 25)
ss = seconds (for example, 00)

33 Update the database to reflect the release 18 features. Refer to *X11 input/output guide* (553-3001-400), and *X11 features and services* (553-3001-305) for complete explanations. Be sure to update your memory and floppy disk types, and hard disk.

in LD 17	
LD 17	
REQ	CHG
TYPE	CFN
ADAN	CHG HDK 0
NUMD	1, (2)
FTYP	3S

34 Print system data listed in Table 10. Verify all information is correct. Make corrections if necessary.

To complete the parallel reload process, go to “Complete the NT/61 conversion” on page 62.

If the system fails to load, or SYSxxxx messages indicate data corruption, back out of the parallel reload process by performing the following steps.

Back out of the NT/61 conversion

1 Place CPU 1 into Normal with the MAINT/NORM switch.

2 Disable and unseat the temporary SDI card from CPU 1. Reconnect the CRT or TTY cable to the original port.

3 Disable and remove the QPC584L MSI card from CPU 1. Remove the Release 18 data cartridge from the card.

4 Insert the **Source** QPC742/QPC584 card and data cartridge. Be sure the **Source** data cartridge is installed. Set the ENB/DIS faceplate switch to ENB.

5 Remove the NTND16 MDU.

6 Insert the **Source** MDU/FDU. Connect the original cable between the MSI/FDI and the MDU/FDU.

7 Insert the **Source** A1 and B1 disks in the MDU/FDU.

8 Set the NTND10 CMA ENB/DIS faceplate switch to DIS. Disconnect the CMA cables. **Disconnect the top cable first**. Remove the NTND10 CMA.

9 Insert the **Source** CMA card. Be sure it is faceplate-disabled. Connect the original CMA cables. **Connect the bottom cable first.**

10 Remove the NTND09 Memory card.

11 Insert the **Source** memory card.

12 Replace the NTND08 ROM card with the **Source** ROM card. Refer to "Procedure 9: Install a new Read Only Memory card" on page 163 for instructions.

13 Set the CMA 1 ENB/DIS faceplate switch to ENB.

14 Set the QPC584/QPC742 card ENB/DIS faceplate switch to ENB.

15 Log in and type **ENLT**. This software-enables the QPC584/QPC742 card.

16 Load LD 35. Enable the CMA, and enable memory in CPU 1. Enabling memory may take a few minutes.

LD 35	
ENL CMA 1	Enable the CMA in CPU 1.
ENL 10	Enable the memory in CPU 1.

17 Get the status of the CPU, CMA, extenders, and memory. Ensure all common equipment is enabled.

STAT CPU	Get the status of the CPUs.
STAT CMA	Get CMA status.
STAT EXT	Get the extender status.
STAT MEM	Get the memory status.

18 Clear the display, and clear major and minor alarms in CPU 0.

CDSP	Clear the displays.
CMAJ	Clear major alarms.
CMIN ALL	Clear all minor alarms.

19 Place CPU 0 into Normal by setting the MAINT/NORM faceplate switch to NORM.

20 Test twice and switch CPUs.

TCPU	Test the CPUs.
TCPU	Test the CPU again.
SCPU	Switch the CPUs.
CDSP	Clear display in CPU 1.
********	Get out of overlay.

21 Type **ENLT**. This software enables the QPC584/QPC742 card.

22 Load LD 35. Test and switch CPUs.

LD 35	
TCPU	Test the CPUs.
SCPU	Switch the CPUs.

23 Type ******** to exit overlay.

24 Set the QPC84 Power Monitor card ENL/DIS faceplate switch to ENB (if equipped).

You are now out of the parallel reload process. Verify system operation. Go to “Procedure 12: Postconversion procedure” on page 301.

Complete the NT/61 conversion

1 Log in to the system on CPU 1.

2 Set the time and date in LD 02. Note that if Call Detail Recording (CDR) is used, system message ERR225 will appear. This is normal.

Note: The system stops time when coming out of parallel reload. Up to 90 seconds may be lost. Verify the time when this procedure is complete.

LD 02
STAD dd mm yyyy hh mm ss Set Time and Date.
dd = day (for example, 05 for the fifth)
mm = month (for example, 09 for September)
yyyy = year (2 or 4 digits, for example 92 or 1992)
hh = hour (in 24-hour time, for example, 13:00 for 1:00 pm)
mm = minute (for example, 25)
ss = seconds (for example, 00)

3 Load LD 22 and print **Target** peripheral software version. The **Source** peripheral software version was printed in the pre-conversion procedure. If there is a difference between the **Source** and **Target** peripheral software version, a forced download will occur during initialization when coming out of parallel reload. The system initialization will take longer, and established calls on IPE will be dropped.

```
LD 22
REQ          PRT
TYPE         PSWV
```

4 Disable and unseat the temporary SDI card from CPU 1. Reconnect the CRT or TTY cable to the original port.

> **CAUTION**
> **Call processing will be interrupted.**
> Perform these next steps carefully. This is the point at which your service is interrupted. Calls in process will be interrupted, especially if Peripheral Software Download takes place.

Perform the next 2 steps in succession.
This is the point at which call processing is interrupted; some calls may be dropped.

5 Place CPU 0 into normal by setting the MAINT/NORM faceplate switch to NORM.

6 Initialize CPU 1 by pressing the MAN INT button.

If the system does not initialize within 20 seconds, press the MAN INT button again.

The MSDL and MISP cards available with X11 release 18 and later download peripheral software after initialization. When these cards are present and the peripheral software versions have changed, wait for PSDL completion messages before continuing.

7 Test call processing. This includes, but is not limited to, the following.

Make internal, external and network calls.
Check attendant console activity.
Check DID trunks.

8 Set the QPC584/QPC742 card ENB/DIS faceplate switch to DIS in CPU 0. Remove the MSI/FDI from CPU 0.

9 Install the Release 18 data cartridge on the QPC584L.
Set switches 1, 5, and 7 to ON. Insert the QPC584L MSI in the same slot in CPU 0.

10 Attach the NTND80 cable between the NTND16 MDU and the QPC584L MSI on CPU 0.

11 Set the QPC584L MSI ENB/DIS faceplate switch to ENB on CPU 0.

12 Set the CMA 0 ENB/DIS faceplate switch to DIS. Disconnect the CMA cables from the faceplate. **Disconnect the top cable first**.
Remove the CMA from CPU 0.

13 Set the ENB/DIS switch to DIS on the NTND10 CMA card.
Verify pins 1 and 2 are set on jumper at J3 on the NTND10 CMA card.

14 Insert the NTND10 CMA card in CPU 0.
Connect the cables to the CMA card. **Connect the bottom cable first**.

15 Remove the Memory card from CPU 0.

16 Insert the NTND09 Memory card in the same slot on CPU 0.

17 Replace the ROM in CPU 0 with the NTND08 ROM. Refer to "Procedure 9: Install a new Read Only Memory card" on page 163 for ROM replacement instructions.

18 Set the NTND10 CMA 0 ENB/DIS faceplate switch to ENB.

19 Log back in and verify time and date. Update the time and date, if necessary.

LD 02	
TTAD	Verify time and date.
STAD dd mm yyyy hh mm ss	Set Time and Date.
TTAD	Verify time and date.

20 Enable the CMA, and memory in CPU 0. Enabling memory may take a few minutes.

LD 35	
ENL CMA 0	Enable CMA 0.
ENL 00	Enable the memory in CPU 0.

21 Clear the display, and clear major and minor alarms on CPU 1.

CDSP	Clear the displays on CPU 1.
CMAJ	Clear major alarms.
CMIN ALL	Clear minor alarms.

22 Place CPU 1 into Normal by setting the MAINT/NORM faceplate switch to NORM.

23 Get the status of the CPU, CMA, extenders, and memory. Ensure all common equipment is enabled.

STAT CPU	Get the status of the CPUs.
STAT CMA	Get CMA status.
STAT EXT	Get the extender status.
STAT MEM	Get the memory status.

24 Test twice and switch CPUs. Clear the display and test CPUs again.

TCPU	Test the CPUs.
TCPU	Test CPUs again.
SCPU	Switch the CPUs.
CDSP	Clear display.
TCPU	Test the CPUs again.
********	Exit overlay.

25 Type **ENLT**. This software-enables the QPC584/QPC742 card.

26 Load LD 35 and switch CPUs.

LD 35
SCPU

27 Get the status of the CPU, CMA, extenders, and memory. Ensure all common equipment is enabled.

STAT CPU	Get the status of the CPUs.
STAT CMA	Get CMA status.
STAT EXT	Get the extender status.
STAT MEM	Get the memory status.

28 Load an overlay to verify data cartridge operation.

29 Set the QPC84 Power Monitor card ENB/DIS faceplate switch to ENB (if equipped).

You have now completed the conversion to X11 release 18. Go to “Procedure 12: Postconversion procedure” on page 301.

Convert the RT to X11 release 18

1 Perform the pre-conversion steps as shown in “Procedure 1: Preconversion procedure” on page 35.

2 Load LD 35 and get the status of the CPU, CMA, extenders, and memory. Ensure all common equipment is enabled.

LD 35

STAT CPU	Get the status of the CPUs.
STAT CMA	Get CMA status.
STAT EXT	Get the extender status.
STAT MEM	Get the memory status.

3 Test and switch CPUs.

TCPU	Test the CPUs.
SCPU	Switch the CPUs.

4 Get the status of the other CPU, CMA, extenders, and memory. Ensure all common equipment is enabled.

STAT CPU	Get the status of the CPUs.
STAT CMA	Get CMA status.
STAT EXT	Get the extender status.
STAT MEM	Get the memory status.

5 Ensure CPU 0 is enabled (CPU 1 is idle).

6 If equipped, set the QPC84 Power Monitor card (in CPU cabinet) ENL/DIS faceplate switch to DIS. Do not remove the card.

7 Place CPU 0 into Maintenance by setting the MAINT/NORM faceplate switch to MAINT.

8 List the enabled memory. Disable the memory and CMA in CPU 1.

LENL	List enabled memory.
DIS 10	Disable CPU 1 memory.
DIS CMA 1	Disable CMA 1.

9 Type ******** to exit overlay.

10 Type **DIST**. This software disables the QPC584/QPC742 in CPU 0.

11 On CPU 0, set the QPC584/QPC742 ENB/DIS faceplate switch to DIS.

12 Get a temporary Serial Data Interface card. Use a spare. Verify the baud rate. If it does not match the TTY, output characters may be garbled. Be sure the card is configured exactly as the existing maintenance TTY device.

13 Place the temporary SDI card in vacant slot in CPU 1. If using the SDI paddle board, place it in slot 12 in the rear of CPU 1.

14 Set the temporary SDI card ENB/DIS faceplate switch to ENB. Connect a local TTY, or a modem for a remote TTY, to the temporary SDI card.

15 If an MDU is equipped, remove the QPC584 card from CPU 1 and set switch 3, position 4 (SW3-4) to OFF.

16 Set the MAINT/NORM switch to MAINT in CPU 1. This will cause a sysload. If the sysload does not begin, press the RLD button on CMA 1 **only**.

The following messages will print out on your TTY. The CMA and SDI lights will go out, and the disk drives will run. The following SYS messages will appear (may differ slightly depending on the X11 release). Check for dial tone following the DONE and INI000 messages.

SYS000
SYS092
SYS093
SYS511
SYS091
SYS090
SYSLOAD RLS: xx
ISSUE: x

DONE

INI000

Note: When sysload is complete, midnight (daily) routines will begin. Logging in to the system temporarily interrupts the midnight routines.

17 Load LD 43 from the **Source** disk.

LD 43
EDD000 Indicates LD 43 is loaded.

18 When EDD000 appears, remove the QPC584/QPC742 card from CPU 1.

19 Install the Release 18 data cartridge on the QPC584L MSI or QPC742F FDI. If using the QPC584L, Set switches 1, 5, and 7 to ON.
Insert the card in the same slot on CPU 1.

20 Remove the original MDU/FDU.

21 Insert the NTND16 MDU or NTND15 FDU.
Do not place the MDU next to a power converter.

Note: The MDU requires power and 3 adjacent card slots. Refer to *Disk drive upgrade procedures* (553-3001-251).

22 If using MDU/MSI, attach the NTND80 cable between the MDU and MSI on CPU 1. If using FDU/FDI, attach the cable between the FDU and FDI on CPU1. Set the ENB/DIS faceplate switch to ENB.

23 Insert **Target** A1 and B1 disks. Enter **EDD <CR>** to initiate datadump. Be sure the datadump is successful before moving on.

24 Set the CMA 1 ENB/DIS faceplate switch to DIS. Disconnect the CMA cables from the faceplate. **Disconnect the top cable first.**
Remove the CMA from CPU 1.

25 Set the NTND10 CMA ENB/DIS switch to DIS.
Verify that pins 1 and 2 are set on jumper J3 on the NTND10 CMA.

26 Insert the NTND10 CMA card into CPU 1.
Connect the cables to the CMA card. **Connect the bottom cable first.**

27 Remove the Memory card from CPU 1.

28 Insert the NTND09 Memory card in the same slot.

29 Replace the original ROM on CPU 1 with the NTND08 ROM. Refer to “Procedure 9: Install a new Read Only Memory card” on page 163 for ROM replacement instructions.

30 Set the NTND10 CMA 1 ENB/DIS faceplate switch to ENB.

31 An automatic reload may occur at this point. If it does not, press the Reload button on CPU 1. The following messages print out on your TTY. Verify any other messages.

SYS000
SYS0092
SYS0093 INHIBITS 000012A
SYS0511
SYS0091
SYS0090
CONV RLS x ISSUE xx TO RLS x ISSUE xx

CONVERSION PROCESS COMPLETED

DONE

INI000

Note: When sysload is complete, midnight routines will begin. Log in to the system to stop the procedures. You cannot interrupt LD 43.

32 Set the time and date in LD 02. Note that if Call Detail Recording (CDR) is used, system message ERR225 will appear. This is normal.

LD 02
STAD dd mm yyyy hh mm ss Set Time and Date.
dd = day (for example, 05 for the fifth)
mm = month (for example, 09 for September)
yyyy = year (2 or 4 digits, for example 92 or 1992)
hh = hour (in 24-hour time, for example, 13:00 for 1:00 pm)
mm = minute (for example, 25)
ss = seconds (for example, 00)

33 Update the database to reflect the release 18 features. Refer to *X11 input/output guide* (553-3001-400), and *X11 features and services* (553-3001-305) for complete explanations. Be sure to update your memory, floppy disk types, and hard disk.

in LD 17
LD 17

REQ	CHG
TYPE	CFN
ADAN	CHG HDK 0
NUMD	1, (2)
FTYP	3S

34 Print site data listed in Table 10. Verify all information is correct. Make corrections if necessary.

To complete the parallel reload process, go to “Complete the RT conversion” on page 73.

If the system fails to load, or SYSxxxx messages indicate data corruption, back out of the parallel reload process by performing the following steps.

Back out of the RT conversion

1 Place CPU 1 into normal with the MAINT/NORM switch.

2 Disable and unseat the temporary SDI card from CPU 1. Reconnect the CRT or TTY cable to the original port.

3 Disable and remove the QPC584L MSI or QPC742F FDI card from CPU 1. Remove the Release 18 data cartridge from the card.

4 Insert the **Source** QPC742/QPC584 card and data cartridge. Be sure the **Source** data cartridge is installed. Set the ENB/DIS faceplate switch to ENB.

5 Remove the NTND16 MDU or NTND15 FDU.

6 Insert the **Source** MDU/FDU. Connect the original cable between the MSI/FDI and the MDU/FDU.

7 Insert the **Source** A1 and B1 disks in the MDU/FDU.

8 Set the NTND10 CMA ENB/DIS faceplate switch to DIS. Disconnect the CMA cables. **Disconnect the top cable first**. Remove the NTND10 CMA.

9 Insert the **Source** CMA card. Be sure it is faceplate-disabled. Connect the original CMA cables. **Connect the bottom cable first.**

10 Remove the NTND09 Memory card.

11 Insert the **Source** memory card.

12 Replace the NTND08 ROM card with the **Source** ROM card. Refer to “Procedure 9: Install a new Read Only Memory card” on page 163 for instructions.

13 Set the CMA 1 ENB/DIS faceplate switch to ENB.

14 Set the QPC584/QPC742 card ENB/DIS faceplate switch to ENB.

15 Log in and type **ENLT**. This software-enables the QPC584/QPC742 card.

16 Load LD 35. Enable the CMA, and memory in CPU 1. Enabling memory may take a few minutes.

LD 35	
ENL CMA 1	Enable the CMA in CPU 1.
ENL 10	Enable the memory in CPU 1.

17 Get the status of the CPU, CMA, extenders, and memory. Ensure all common equipment is enabled.

STAT CPU	Get the status of the CPUs.
STAT CMA	Get CMA status.
STAT EXT	Get the extender status.
STAT MEM	Get the memory status.

18 Clear the display, and clear major and minor alarm in CPU 0.

CDSP	Clear the displays.
CMAJ	Clear major alarms.
CMIN ALL	Clear all minor alarms.

19 Place CPU 0 into Normal by setting the MAINT/NORM faceplate switch to NORM.

20 Test twice and switch CPUs.

TCPU	Test the CPUs.
TCPU	Test the CPU again.
SCPU	Switch the CPUs.
CDSP	Clear display in CPU 1.
********	Get out of overlay.

21 Type **ENLT**. This software enables the QPC584/QPC742 card.

22 Load LD 35. Test and switch CPUs.

LD 35	
TCPU	Test the CPUs.
SCPU	Switch the CPUs.

23 Type ******** to exit overlay.

24 Set the QPC84 Power Monitor card ENL/DIS faceplate switch to ENB (if equipped).

You are now out of the parallel reload process. Verify system operation. Go to “Procedure 12: Postconversion procedure” on page 301.

Complete the RT conversion

1 Log in to the system on CPU 1.

2 Set the time and date in LD 02. Note that if Call Detail Recording (CDR) is used, system message ERR225 will appear. This is normal.

Note: The system stops time when coming out of parallel reload. Up to 90 seconds may be lost. Check the time again when this procedure is complete.

LD 02
STAD dd mm yyyy hh mm ss Set Time and Date.
dd day (for example, 05 for the fifth)
mm= month (for example, 09 for September)
yy = year (2 or 4 digits, for example 92 or 1992)
hh = hour (in 24-hour time, for example, 13:00 for 1:00 pm)
mm = minute (for example, 25)
ss = seconds (for example, 00)

3 Load LD 22 and print the **Target** peripheral software version. The **Source** peripheral software version was printed in the pre-conversion procedure. If there is a difference between the **Source** and **Target** peripheral software version, a forced download will occur during initialization when coming out of parallel reload. The system initialization will take longer and established calls on IPE will be dropped.

LD 22
REQ PRT
TYPE PSWV

4 Disable and unseat the temporary SDI card from CPU 1. Reconnect the CRT or TTY cable to the original port.

CAUTION
Call processing will be interrupted.
Perform these next steps carefully. This is the point at which your service is interrupted. Calls in process will be interrupted, especially if Peripheral Software Download takes place.

Perform the next 2 steps in succession.
This is when call processing is interrupted; some calls may be dropped.

5 Place CPU 0 into Normal by setting the MAINT/NORM faceplate switch to NORM.

6 Initialize CPU 1 by pressing the MAN INT button.

If the system does not initialize within 20 seconds, press the MAN INT button again.

The MSDL and MISP cards available with X11 release 18 and later download peripheral software after initialization. When these cards are present and the peripheral software versions have changed, wait for PSDL completion messages before continuing.

7 Test call processing. This includes, but is not limited to, the following.

Make internal, external and network calls.
Check attendant console activity.
Check DID trunks.

8 Set the QPC584/QPC742 card ENB/DIS faceplate switch to DIS in CPU 0. Remove the MSI/FDI from CPU 0.

9 Install the Release 18 data cartridge on the QPC584L MSI or QPC742F FDI. If using the QPC584L, set switches 1, 5, and 7 to ON.
Insert the card in the same slot on CPU 1.

10 If using MDU/MSI, attach the NTND80 cable between the MDU and MSI on CPU 0.

If using FDU/FDI, attach the cable between the FDU and FDI on CPU 0. Set the ENB/DIS faceplate switch to ENB.

11 Set the CMA 0 ENB/DIS faceplate switch to DIS. Disconnect the CMA cables from the faceplate. **Disconnect the top cable first**.
Remove the CMA from CPU 0.

12 Set the ENB/DIS switch to DIS on the NTND10 CMA card.
Verify pins 1 and 2 are set on jumper at J3 on the NTND10 CMA card.

13 Insert the NTND10 CMA card in CPU 0.
Connect the cables to the CMA card. **Connect the bottom cable first**.

14 Remove the Memory card from CPU 0.

15 Insert the NTND09 Memory card in the same slot on CPU 0.

16 Replace the ROM in CPU 0 with the NTND08 ROM. Refer to "Procedure 9: Install a new Read Only Memory card" on page 163 for ROM replacement instructions.

17 Set the NTND10 CMA 0 ENB/DIS faceplate switch to ENB.

18 Log back in and verify time and date. Update the time and date, if necessary.

LD 02	
TTAD	Verify time and date.
STAD dd mm yyyy hh mm ss	Set Time and Date.
TTAD	Verify time and date.

19 Enable the CMA, and memory in CPU 0. Enabling memory may take a few minutes.

LD 35	
ENL CMA 0	Enable CMA 0.
ENL 00	Enable the memory in CPU 0.

20 Clear the display, and clear major and minor alarms on CPU 1.

CDSP	Clear the displays on CPU 1.
CMAJ	Clear major alarm.
CMIN ALL	Clear minor alarm.

21 Place CPU 1 into normal by setting the MAINT/NORM faceplate switch to NORM.

22 Get the status of the CPU, CMA, extenders, and memory. Ensure all common equipment is enabled.

STAT CPU	Get the status of the CPUs.
STAT CMA	Get CMA status.
STAT EXT	Get the extender status.
STAT MEM	Get the memory status.

23 Test twice and switch CPUs. Clear the display and test the CPUs again.

TCPU	Test the CPUs.
TCPU	Test CPUs again.
SCPU	Switch the CPUs.
CDSP	Clear display.
TCPU	Test the CPUs again.
********	Exit overlay.

24 Type **ENLT**. This software enables the QPC584/QPC742 card.

25 Load LD 35 and switch CPUs.

LD 35
SCPU

26 Get the status of the CPU, CMA, extenders, and memory. Ensure all common equipment is enabled.

STAT CPU	Get the status of the CPUs.
STAT CMA	Get CMA status.
STAT EXT	Get the extender status.
STAT MEM	Get the memory status.

27 Load an overlay to verify data cartridge operation.

28 Set the QPC84 Power Monitor card ENB/DIS faceplate switch to ENB (if equipped).

You have now completed the conversion to X11 release 18. Go to “Procedure 12: Postconversion procedure” on page 301.

Convert the XT/71 to X11 release 18

1 Perform the pre-conversion steps as shown in “Procedure 1: Preconversion procedure” on page 35.

2 Load LD 35 and get the status of the CPU, CMA, extenders, and memory. Ensure all common equipment is enabled.

LD 35

STAT CPU	Get the status of the CPUs.
STAT CMA	Get CMA status.
STAT EXT	Get the extender status.
STAT MEM	Get the memory status.

3 Test and switch CPUs.

TCPU	Test the CPUs.
SCPU	Switch the CPUs.

4 Get the status of the other CPU, CMA, extenders, and memory. Ensure all common equipment is enabled.

STAT CPU	Get the status of the CPUs.
STAT CMA	Get CMA status.
STAT EXT	Get the extender status.
STAT MEM	Get the memory status.

5 Ensure CPU 0 is enabled (CPU 1 is idle).

6 If equipped, set the QPC84/QPC173 Power Monitor card (in CPU cabinet) ENL/DIS faceplate switch to DIS. Do not remove the card.

7 Place CPU 0 into Maintenance by setting the MAINT/NORM faceplate switch to MAINT.

8 List the enabled memories. Disable the memories and CMA in CPU 1.

LENL	List enabled memories.
DIS 10	Disable CPU 1 memory (10, 11, 12 if equipped).
DIS CMA 1	Disable CMA 1.

9 Set the QPC215 Segmented Bus Extender ENB/DIS faceplate switch to DIS in CPU 1 only.

10 If using the QPC775 Clock Controller card, load LD 60 and software-disable clock 1. Then hardware-disable clock controller 1.

LD 60	
SSCK 0	Get the status of clock 0.
SSCK 1	Get the status of clock 1.
SWCK	Switch system clock to make clock 0 active (if necessary).
DIS CC 1	Disable clock controller 1.

Set the QPC775 ENB/DIS faceplate switch to DIS in CPU 1.

11 Type ******** to exit overlay.

12 Type **DIST**. This software disables the QPC584/QPC742 in CPU 0.

13 Set the QPC584/QPC742 ENB/DIS faceplate switch to DIS in CPU 0.

14 Get a temporary Serial Data Interface card. Use a spare. Verify the baud rate. If it does not match the TTY, output characters may be garbled. Be sure the card is configured exactly as the existing maintenance TTY device.

15 Place the temporary SDI card in a vacant slot in CPU 1.

16 Set the temporary SDI card ENB/DIS faceplate switch to ENB. Connect a local TTY, or a modem for a remote TTY, to the temporary SDI card.

17 If an MDU is equipped, remove the QPC584 card from CPU 1 and set switch 3, position 4 (SW3-4) to OFF.

18 Set the MAINT/NORM switch to MAINT in CPU 1. This will cause a sysload. If the sysload does not begin, press the RLD button on CMA 1 **only**.

The following messages will print out on your TTY. The CMA and SDI light will go out, and the disk drives will run. The following SYS messages will appear (may differ slightly depending on the X11 release). Check for dial tone following the DONE and INI000 messages.

SYS000
SYS092
SYS093
SYS511
SYS091
SYS090
SYSLOAD RLS: xx
ISSUE: x

DONE

INI000

Note: When sysload is complete, midnight (daily) routines will begin. Logging in to the system temporarily interrupts the midnight routines.

19 Load LD 43 from the **Source** disk.

LD 43
EDD000 indicates LD 43 is loaded

20 When EDD000 appears, remove the QPC584/QPC742 card from CPU 1.

21 Install the Release 18 data cartridge on the QPC584L.
Set switches 1, 5, and 7 to ON. Insert the QPC584L MSI in the same slot in CPU 1.

22 Remove the original MDU/FDU.

23 Insert the NTND16 MDU.
Do not place the MDU next to a power converter.

Note: The MDU requires power and 3 adjacent card slots. Refer to *Disk drive upgrade procedures* (553-3001-251).

24 Attach the cables between the MDU and the MSI on CPU 1. Set the QPC584L ENB/DIS faceplate switch to ENB.

25 Insert **Target** A1 and B1 disks. Enter **EDD <CR>** to initiate the data dump. Be sure the data dump is successful before moving on.

26 Set the CMA 1 ENB/DIS faceplate switch to DIS. Disconnect the CMA cables from the faceplate. **Disconnect the top cable first.**
Remove the CMA from CPU 1.

27 Set the NTND10 CMA ENB/DIS switch to DIS.
Verify that pins 1 and 2 are set on jumper J3 on the NTND10 CMA.

28 Insert the NTND10 CMA card into CPU 1.
Connect the cables to the CMA card. **Connect the bottom cable first**.

29 Remove Memory cards from CPU 1.

30 Insert NTND09 Memory cards in the same slots in CPU 1.

31 Replace the original ROM in CPU 1 with the NTND08 ROM. Refer to “Procedure 9: Install a new Read Only Memory card” on page 163 for ROM replacement instructions.

32 Set the NTND10 CMA 1 ENB/DIS faceplate switch to ENB.

33 An automatic reload may occur at this point. If it does not, press the Reload button on CPU 1. The following messages appear.

SYS000
SYS0092
SYS0093 INHIBITS 000012A
SYS0511
SYS0091
SYS0090
CONV RLS x ISSUE xx TO RLS x ISSUE xx

CONVERSION PROCESS COMPLETED
DONE

INI000

Note: When sysload is complete, midnight routines will begin. Log in to the system to stop the procedures. You cannot interrupt LD 43.

34 Set the time and date in LD 02. Note that if Call Detail Recording (CDR) is used system message ERR225 will appear. This is normal.

LD 02
STAD dd mm yyyy hh mm ss Set Time and Date.
dd = day (for example, 05 for the fifth)
mm = month (for example, 09 for September)
yyyy = year (2 or 4 digits, for example 92 or 1992)
hh = hour (in 24-hour time, for example, 13:00 for 1:00 pm)
mm = minute (for example, 25)
ss = seconds (for example, 00)

35 Update the database to reflect the X11 release 18 features. Refer to *X11 input/output guide* (553-3001-400), and *X11 features and services* (553-3001-305) for complete explanations. Be sure to update your memory, floppy disk types, and hard disk.

in LD 17	
REQ	CHG
TYPE	CFN
ADAN	CHG HDK 0
NUMD	1, (2)
FTYP	3S

36 Print system data listed in Table 10. Verify all information is correct. Make corrections if necessary.

Go to “Complete the XT/71 conversion” on page 84 to finish this process.

If the system fails to load, or SYSxxxx messages indicate data corruption, back out of the parallel reload process by performing the following steps.

Back out of the XT/71 conversion

1 Place CPU 1 into Normal with the MAINT/NORM switch.

2 Disable and unseat the temporary SDI card from CPU 1. Reconnect the CRT or TTY cable to the original port.

3 Disable and remove the QPC584L MSI card from CPU 1. Remove the Release 18 data cartridge from the card.

4 Insert the **Source** QPC742/QPC584 card and data cartridge. Be sure the **Source** data cartridge is installed. Set the ENB/DIS faceplate switch to ENB.

5 Remove the NTND16 MDU.

6 Insert the **Source** MDU/FDU. Connect the original cable between the MSI/FDI and the MDU/FDU.

7 Insert the **Source** A1 and B1 disks in the MDU/FDU.

8 Set the NTND10 CMA ENB/DIS faceplate switch to DIS. Disconnect the CMA cables. **Disconnect the top cable first**. Remove the NTND10 CMA.

9 Insert the **Source** CMA card. Be sure it is faceplate disabled. Connect the original CMA cables. **Connect the bottom cable first.**

10 Remove the NTND09 Memory cards.

11 Insert the **Source** memory cards.

12 Replace the NTND08 ROM card with the **Source** ROM card. Refer to “Procedure 9: Install a new Read Only Memory card” on page 163 for instructions.

13 Set the CMA 1 ENB/DIS faceplate switch to ENB.

14 Set the QPC584/QPC742 card ENB/DIS faceplate switch to ENB.

15 Log in and type **ENLT**. This software-enables the QPC584/QPC742 card.

16 Load LD 35. Enable the CMA, and memories in CPU 1. Enabling memory may take a few minutes.

LD 35	
ENL CMA 1	Enable the CMA in CPU 1.
ENL 10	Enable the memory in CPU 1 (10, 11, 12 if equipped).

17 Set the QPC215 SBEs faceplate switch to ENB.

18 Get the status of the CPU, CMA, extenders, and memory. Ensure all common equipment is enabled.

STAT CPU	Get the status of the CPUs.
STAT CMA	Get CMA status.
STAT EXT	Get the extender status.
STAT MEM	Get the memory status.

19 Clear the display, and clear major and minor alarms in CPU 0.

CDSP	Clear the displays.
CMAJ	Clear major alarms.
CMIN ALL	Clear all minor alarms.

20 Place CPU 0 into Normal by setting the MAINT/NORM faceplate switch to NORM.

21 Test twice and switch CPUs.

TCPU	Test the CPUs.
TCPU	Test the CPU again.
SCPU	Switch the CPUs.
CDSP	Clear display in CPU 1.
********	Get out of overlay.

22 Type **ENLT**. This software enables the QPC584/QPC742 card.

23 Load LD 35. Test and switch CPUs.

LD 35	
TCPU	Test the CPUs.
SCPU	Switch the CPUs.

24 Type ******** to exit overlay.

25 If using the QPC775 Clock Controller card, hardware-enable clock controller 1. Load LD 60 and enable clock 1 in the software.

Set the QPC775 ENB/DIS faceplate switch to ENB in CPU 1.

LD 60	
ENL CC 1	Enable clock controller 1.
SSCK 0	Get the status of clock 0.
SSCK 1	Get the status of clock 1.

26 If using the QPC471 Clock Controller card and PRI/DTI is equipped, load LD 60. Check clock tracking status. If necessary, force the clock to track on primary reference.

LD 60	
SSCK 0	Get the system clock status for clock 0.
SSCK 1	Get the system clock status for clock 1. If the clock is not tracking, DTI061 is printed.
TRCK PCK	Force the clock to track on primary reference.

27 Set the QPC84/QPC173 Power Monitor card (in the CPU cabinet) ENB/DIS faceplate switch to ENB (if equipped).

You are now out of the parallel reload process. Verify system operation. Go to “Procedure 12: Postconversion procedure” on page 301.

Complete the XT/71 conversion

1 Log in to the system on CPU 1.

2 Set the time and date in LD 02. Note that if Call Detail Recording (CDR) is used, system message ERR225 will appear. This is normal.

Note: The system stops time when coming out of parallel reload. Up to 90 seconds may be lost. Check the time again when this procedure is complete.

LD 02
STAD dd mm yyyy hh mm ss Set Time and Date.
dd = day (for example, 05 for the fifth)
mm = month (for example, 09 for September)
yyyy = year (complete, for example, 1991)
hh = hour (in 24-hour time, for example, 13:00 for 1:00 pm)
mm = minute (for example, 25)
ss = seconds (for example, 00)

3 Load LD 22 and print the **Target** peripheral software version. The **Source** peripheral software version was printed in the pre-conversion procedure. If there is a difference between the **Source** and **Target** peripheral software version, a forced download will occur during initialization when coming out of parallel reload. The system initialization will take longer and established calls on IPE will be dropped.

LD 22	
REQ	PRT
TYPE	PSWV

4 If using the QPC775 Clock Controller card, hardware-enable clock controller 1. Load LD 60 and enable clock 1 in the software.

Set the QPC775 ENB/DIS faceplate switch to ENB in CPU 1.

LD 60	
ENL CC 1	Enable clock controller 1**.**
SSCK 0	Get the status of clock 0.
SSCK 1	Get the status of clock 1.

5 Disable and unseat the temporary SDI card from CPU 1. Reconnect the CRT or TTY cable to the original port.

6 Set the QPC215 SBE ENB/DIS faceplate switch to ENB in CPU 1.

> **CAUTION**
> **Call processing will be interrupted**
> Perform the next steps carefully. This is the point at which your service is interrupted. Calls in process will be interrupted, especially if Peripheral Software Download takes place.

Perform the next two steps in succession.
This is the point at which call processing is interrupted; some calls may be dropped.

7 Set the QPC215 SBE ENB/DIS faceplate switch to DIS in CPU 0.

8 Initialize CPU 1 by pressing the MAN INT button.

If the system does not initialize within 20 seconds, press the MAN INT button again.

The MSDL and MISP cards available with X11 release 18 and later download peripheral software after initialization. When these cards are present and the peripheral software versions have changed, wait for PSDL completion messages before continuing.

9 Test call processing. This includes, but is not limited to, the following.

Make internal, external, and network calls.
Check attendant console activity.
Check DID trunks.

10 Place CPU 0 into Normal by setting the MAINT/NORM faceplate switch to NORM.

11 Set the QPC584/QPC742 card ENB/DIS faceplate switch to DIS in CPU 0. Remove the MSI/FDI from CPU 0.

12 Install the Release 18 data cartridge on the QPC584L.
Set switches 1, 5, and 7 to ON. Insert the QPC584L MSI in the same slot in CPU 0.

13 Attach the NTND80 cable between the NTND16 MDU and the QPC584L MSI on CPU 0.

14 Set the QPC584L MSI ENB/DIS faceplate switch to ENB on CPU 0.

15 Set the CMA 0 ENB/DIS faceplate switch to DIS. Disconnect the CMA cables from the faceplate. **Disconnect the top cable first**.
Remove the CMA from CPU 0.

16 Set the ENB/DIS switch to DIS on the NTND10 CMA card.
Verify pins 1 and 2 are set on the jumper at J3 on the NTND10 CMA card.

17 Insert the NTND10 CMA card in CPU 0.
Connect the cables to the CMA card. **Connect the bottom cable first**.

18 Remove the Memory cards from CPU 0.

19 Insert NTND09 Memory cards in memory slots beginning with 0 (immediately to the left of the CMA card).

20 Replace the ROM in CPU 0 with the NTND08 ROM. Refer to "Procedure 9: Install a new Read Only Memory card" on page 163 for ROM replacement instructions.

21 Set the NTND10 CMA 0 ENB/DIS faceplate switch to ENB.

22 Set the QPC215 SBE ENB/DIS faceplate switch to ENB in CPU 0.

23 Log back in and verify time and date. Update the time and date, if necessary.

LD 02	
TTAD	Verify time and date.
STAD dd mm yyyy hh mm ss	Set Time and Date.
TTAD	Verify time and date.

24 Enable the CMA, and enable memories in CPU 0. Enabling memory may take a few minutes.

LD 35	
ENL CMA 0	Enable CMA 0.
ENL 00	Enable the memory in CPU 0 (00, 01, 02 if equipped).

25 Clear the display, and clear major and minor alarms on CPU 1.

CDSP	Clear the displays on CPU 1.
CMAJ	Clear major alarm.
CMIN ALL	Clear minor alarm.

26 Place CPU 1 into Normal by setting the MAINT/NORM faceplate switch to NORM.

27 Get the status of the CPU, CMA, extenders, and memory. Ensure all common equipment is enabled.

STAT CPU	Get the status of the CPUs.
STAT CMA	Get CMA status.
STAT EXT	Get the extender status.
STAT MEM	Get the memory status.

28 Test twice and switch CPUs. Clear the display and test CPUs again.

TCPU	Test the CPUs.
TCPU	Test CPUs again.
SCPU	Switch the CPUs.
CDSP	Clear display.

TCPU	Test the CPUs again.
********	Exit overlay.

29 Type **ENLT**. This software-enables the QPC584/QPC742 card.

30 Load LD 35 and switch CPU.

LD 35
SCPU

31 Get the status of the CPU, CMA, extenders, and memory. Ensure all common equipment is enabled.

STAT CPU	Get the status of the CPUs.
STAT CMA	Get CMA status.
STAT EXT	Get the extender status.
STAT MEM	Get the memory status.

32 If using the QPC471 Clock Controller card and PRI/DTI is equipped, load LD 60. Check clock tracking status. If necessary, force the clock to track on primary reference.

LD 60	
SSCK 0	Get the system clock status for clock 0.
SSCK 1	Get the system clock status for clock 1. If the clock is not tracking, DTI061 is printed.
TRCK PCK	Force the clock to track on primary reference.

33 Set the QPC84/QPC173 Power Monitor card (in the CPU cabinet) ENB/DIS faceplate switch to ENB (if equipped).

You have now completed the conversion to X11 release 18.
Go to “Procedure 12: Postconversion procedure” on page 301.

Procedure 4:
Convert to later issue of the same release

CAUTION

To avoid damaging equipment from electrostatic discharge, wear a properly connected anti-static wrist strap when working on or near Meridian 1 equipment.

Note: **This procedure does not apply to options 51C, 61C, 81, or 81C.** When upgrading from one issue to another on an option 51C, 61C, 81 or 81C, the procedure is the same as that for upgrading from one release to another. Refer to the appropriate procedure for your system:

- For option 51C without IODU/C: “Convert with Automatic Inline Conversion: Option 51C (without IODU/C)” on page 48
- For option 51C with IODU/C: “Option 51C software conversion” on page 147
- For option 61C, 81, or 81C without IODU/C: “Parallel reload the 61C/81/81C” on page 102
- For options 61C, 81, or 81C with IODU/C: “You are now done with your parallel reload. Go to “Procedure 12: Postconversion procedure” on page 301.” on page 129

Use the procedure in this section to convert from one issue of software to another within the same release on systems *other* than options 51C, 61C, 81, and 81C. When upgrading from one issue to another within the same release, no additional conversion media is needed. If you are upgrading from one issue to another within the same release and adding software packages, you must also replace the data cartridge.

With X11 release 16.65 and later, patches do not need to be removed prior to conversion. When performing a data dump (EDD), an EHM500 message is printed, rather than a list of patch numbers.

If converting from 15.53, 14.41, or earlier, you must have the patches removed prior to converting. Data corruption may occur if you do not remove the patches prior to conversion.

If converting from release 19 or later, a plus sign (+) will appear next to the software issue number in LD 22 if a patch is included in your software.

Be sure you insert the A disk into drive A, and the B disk in drive B.

1 Perform the steps in the pre-conversion procedure (“Procedure 1: Preconversion procedure” on page 35) if operating a single CPU system. Perform the parallel reload procedure (“Procedure 6: Performing a parallel reload” on page 101) if operating a dual CPU system.

2 Load LD 43 from the **Source** disk.

LD 43
EDD000 Indicates LD 43 is loaded.

3 When you see EDD000, disable the QPC584, NT9D34, or QPC742 card in CPU 1 by setting the ENB/DIS faceplate switch to DIS.

4 If an MDU or SMDU is equipped, remove the QPC584 or NT9D34 card and:

- for QPC584 cards, set position 4 on switch 3 (SW3-4) to OFF
- for NT9D34 cards, set position 4 on switch 2 (SW2-4) to OFF

5 Perform this step if you are also adding software packages: Remove the **Source** data cartridge from the QPC584, NT9D34, or QPC742 card. Replace it with the **Target** data cartridge.

6 Reinsert the QPC584, NT9D34, or QPC742 card and set the ENB/DIS faceplate switch to ENB.

7 Remove both **Source** disks, and insert both **Target** disks (A1 and B1). Dump **to** the **Target** disks.

EDD	
DATADUMP COMPLETE	Output when data dump is successful.
BACKING UP DISK B1	Output when hard drive is equipped.
EDD034	
BACKUP FAILED	This appears when the QPC584 has SW3-4 OFF or the NT9D34 card has SW2-4 OFF. This is not an error.
[.]	Signifies completion of data dump.

If the data dump is not successful, do not proceed with the conversion. Contact your technical support personnel.

8 On a dual CPU system, perform a sysload on CPU 1 only by pressing the RLD button.

On a single CPU system, perform a sysload by pressing the RLD button. The data is automatically converted. Conversion is complete when you see the **DONE** message.

9 The following sysload and initialization messages are output on the TTY connected to CPU 1.

SYS000
SYS092
SYS093
SYS511
SYS091
SYS090

DONE

INI000

> **CAUTION**
> **System information will be lost.**
> With Incremental Software Management (ISM) in X11 release 15.55 and higher, if SYS message 4327, 4328, 4329, or 4330 appears at sysload, perform a sysload of **Source** system disks. Order ISM disks with sufficient system parameters configured. Contact your Northern Telecom representative.

If you are doing a parallel reload, go to “Completing the parallel reload on the NT/RT/61” on page 118.

If you are on a single CPU system, go to “Procedure 12: Postconversion procedure” on page 301 for post-conversion procedures.

Procedure 5:
Using a three-disk or four-disk configuration

These procedures describe how install system software and convert the customer database using a three-disk software package. If you have a release 17 or release 19 software, use the procedure below. If you have release 20 software, use the procedure that begins on page 96.

X11 releases 17 and 19

X11 releases 17 and 19 require a three-disk configuration for XT and 71 systems. This method takes place with three floppy disks labeled A1, A2, and B1. Disk A2 is a continuation of disk A1.

To support this procedure, a QPC584 card (vintage F4, K, or later) or an NT9D34 card is required. Other vintages cause the system to initialize when you attempt to load an overlay not located on the A1 disk.

The following overlays can be accessed from the A1 disk. In the event of hard drive failure, these overlays can be accessed from the floppy. Other LDs may also be available, depending on the disk space available, but only these listed are guaranteed to be accessible.

LDs 17, 22, 32, 34, 37, 43, 44, 45, 47, 48, 60, 96 with X11 release 17

LDs 17, 22, 32, 34, 37, 43, 44, 60, 96 with X11 release 19 and later

1 Load LD 43 from the **Source** release disk.

2 Remove the QPC584 or NT9D34 card and:

- for QPC584 cards, set position 4 on switch 3 (SW3-4) to OFF
- for NT9D34 cards, set position 4 on switch 2 (SW2-4) to OFF

3 Remove the **Source** data cartridge from the QPC584 or NT9D34 card and replace it with the **Target** data cartridge.

4 Reinsert the QPC584 or NT9D34 card and set the ENB/DIS faceplate switch to ENB.

5 Put **Target** disks A1 and B1 into the floppy disk drives.

6 Enter EDD to initiate a data dump to disks A1 and B1.

DATADUMP COMPLETE	Output when data dump is successful.
BACKING UP DISK B1	Output when hard drive is equipped.
EDD034	
BACKUP FAILED	This appears when the QPC584 card has SW3-4 OFF, or when the NT9D34 card has SW2-4 OFF. This is not an error.
[.]	Signifies completion of data dump.

If the data dump is not successful, do not proceed with the conversion. Contact your technical support personnel.

7 Replace the ROM card if necessary. See “Procedure 9: Install a new Read Only Memory card” on page 163.

8 Perform the sysload from the **Target** disks. The system does not prompt you to insert the A2 disk, because it is not needed for sysload.

9 This step is required for new hard drives only. If you are reconfiguring an existing hard drive, go on to step 11. Refer to *X11 input/output guide* (553-3001-400) for complete details concerning these prompts.

X11 release 17 and earlier

```
LD 17
REQ     CHG
TYPE    CFN
IOTB    YES
ADAN    CHG HDK 0
NUMD    1, (2)
FTYP    (3), 3S
```

X11 release 18 later

```
LD 17
REQ     CHG
TYPE    CFN
ADAN    CHG HDK 0
NUMD    1, (2)
FTYP    3S
```

You can now restore the hard disk from the floppies with the following steps. Perform a data dump to two sets of the backup disks only. Leave one set of the **Target** disks unconverted, with no database, until you are sure the system converted successfully.

10 If you are performing a parallel reload, go to “Completing the parallel reload on the NT/RT/61” on page 118.

11 Load LD 43 from the **Source** disk.

12 Type RES to initiate the floppy to hard disk restore.

13 After completing the A1 restore, the system prompts you to insert A2. The B1 disk restore is performed automatically after the A2 restore is complete. After completing the restore, reinsert A1 into the A disk drive.

14 If an MDU or SMDU is equipped, set the ENB/DIS faceplate switch on the QPC584 or NT9D34 card to DIS.

15 Remove the QPC584 or NT9D34 card and:

- for QPC584 cards, set position 4 on switch 3 (SW3-4) to ON
- for NT9D34 cards, set position 4 on switch 2 (SW2-4) to ON

16 Reinsert the QPC584 or NT9D34 card, and set the ENB/DIS switch to ENB.

17 Enter **EDD** to perform a data dump for backups.

The upgrade is now complete. From this point on, further data dumps will affect both hard drive and floppies.

Now go to “Procedure 12: Postconversion procedure” on page 301.

X11 release 20 and later

STE, RT, NT, XT systems and options 21E, 51, 61, and 71 require a four-disk configuration when installing release 20. This method takes place with four floppy disks labeled A1, A2, A3 and B. Disk A2 is a continuation of disk A1 and A3 is a continuation of disk A2. Unattended sysload is not supported.

A1 and B disks should remain in the MDU/SMDU when the system is idle, or unattended.

Use this procedure only if your system is running on release 19. If your system is not already running release 19, use "Procedure 3: Convert from one X11 release to a later release" on page 47 to convert to release 19, or the appropriate chapter in *Upgrade system installation to X11 release 24* (553-3001-258) to upgrade your system hardware and software.

To support this procedure, a QPC584 card (vintage F4, K, or later) or an NT9D34 card is required. Other vintages cause the system to initialize when you attempt to load an overlay not located on the A1 disk.

> ***Note:*** Release 20 requires that an NT9D33 SMDU (option 21E and STE systems) or NTND16 MDU (all other systems covered by this procedure) be installed in the system.

Only LD 43 can be accessed from disk A1. No other overlays can be accessed from disks A1, A2 or A3 until a RESTORE to the hard drive has been done.

1 Log into the system.

2 Load LD 43 from the **Source** release disk.

3 If an MDU or SMDU is equipped, remove the QPC584 or NT9D34 card and:

- for QPC584 cards, set position 4 on switch 3 (SW3-4) to OFF
- for NT9D34 cards, set position 4 on switch 2 (SW2-4) to OFF

4 Remove the **Source** data cartridge from the QPC584 or NT9D34 card and replace it with the **Target** data cartridge.

5 Reinsert the QPC584 or NT9D34 card and set the ENB/DIS faceplate switch to ENB.

6 Put **Target** disks A1 and B into the floppy disk drives.

7 Enter EDD to initiate a data dump to disks A1 and B.

DATADUMP COMPLETE	Output when data dump is successful.
BACKING UP DISK B	Output when hard drive is equipped.
EDD034	
BACKUP FAILED	This appears when the QPC584 card has SW3-4 OFF, or when the NT9D34 card has SW2-4 OFF. This is not an error.
[.]	Signifies completion of data dump.

CAUTION

If the data dump is not successful, do not continue; contact your technical support organization. A data dump problem must be corrected before proceeding.

8 Perform the sysload from the **Target** disks. When prompted, remove disk A1 from the A drive and insert disk A2. The system will prompt again, to remove disk A2, and insert A3. System messages similar to the following will appear:

SYS000
INSERT DISK A3 INTO DRIVE A
SYSLOAD RLS: xxISSUE:x
DONE
INI000

9 Immediately following the system initialization sequence, remove disk A3 from drive A and **insert disk A1**.

10 Log into the system.

11 Copy the contents of the data disks to the hard disk by entering

LD 43	to load the program
RES	to copy the entire contents of the backup to the hard disk

Insert additional system disks when requested.

12 When the RESTORE sequence is complete, remove disk A3 from drive A and insert disk A1.

13 Set the ENB/DIS switch on each MSI or EMSI card to DIS.

14 Remove the QPC584 or NT9D34 card and:

- for QPC584 cards, set position 4 on switch 3 (SW3-4) to ON
- for NT9D34 cards, set position 4 on switch 2 (SW2-4) to ON

15 Reinsert the QPC584 or NT9D34 card, and set the ENB/DIS switch to ENB.

16 This step is required for new hard drives only. Refer to *X11 input/output guide* (553-3001-400) for complete details concerning these prompts:

```
LD 17
REQ     CHG
TYPE    CFN
ADAN    CHG HDK 0
NUMD    1, (2)
FTYP    3S
```

17 If you are performing a parallel reload, go to “Completing the parallel reload on the NT/RT/61” on page 118.

18 Perform a data dump:

LD 43	to load the program
EDD	to begin the data dump

When “DATABASE BACKUP COMPLETE” or “DATADUMP COMPLETE” displays on the terminal, proceed with the next step.

> **CAUTION**
> If the data dump is not successful, do not continue; contact your technical support organization. A data dump problem must be corrected before proceeding.

********	to exit the program

19 Verify the system by using the test procedures described in *Meridian 1 system installation procedures* (553-3001-210) and *X11 input/output guide* (553-3001-400). Clear any faults discovered during testing.

The upgrade is now complete. From this point on, further data dumps will affect both hard drive and floppies.

Now go to “Procedure 12: Postconversion procedure” on page 301.

Procedure 6:
Performing a parallel reload

CAUTION

To avoid damaging equipment from electrostatic discharge, wear a properly connected anti-static wrist strap when working on or near Meridian 1 equipment.

Note: This procedure assumes your existing system is not equipped with the Input Output Disk Unit with CD-ROM (IODU/C) card. **For software conversion procedures using CD-ROM, refer to "Procedure 7: CD-ROM software conversion" on page 131.**

Use the parallel reload procedures to convert from one X11 release to a later release and to perform software upissues within the same X11 release. These parallel reload procedures are for software conversions only. Do *not* use this procedure for any other purpose.

These procedures must only be performed by someone with knowledge of the system and these procedures. Follow these procedures exactly.

Parallel reloads can be done from either CPU. For the purposes of this document, we begin with CPU 0. To better understand the process, read through the entire procedure before you begin.

> **CAUTION**
> **Check your CPU labels.**
> Be sure you are working with CPU 0 or CPU 1 as designated throughout the parallel reload procedures.

Parallel reload the 61C/81/81C

This procedure is for software conversions and upissues only. It is not an installation, upgrade, or maintenance procedure. Refer to system documentation for complete details regarding the option 61C/81/81C.

Before beginning this procedure, verify the following:

- Determine whether your system requires additional memory. Refer to “Procedure 10: Increasing memory” on page 169 for X11 release memory requirements.
- The hard disks must be synchronized. Refer to *X11 input/output guide* (553-3001-400) for synchronization information.

1 Load the Equipment Data Dump Program (LD 43). At the prompt, enter

LD 43	to load the program

2 When “EDD000” appears on the terminal, enter

EDD	to begin the data dump

3 When “DATABASE BACKUP COMPLETE” or “DATADUMP COMPLETE” appears on the terminal, enter

********	to exit the program

> **CAUTION**
> If the data dump is not successful, do not continue; contact your technical support organization. A data dump problem must be corrected before proceeding.

4 Load LD 137 and get the status of the hard disks to be sure they are synchronized. If not, synchronize them before proceeding.

LD 137	
STAT	Get the status of the hard disks.
SYNC	Synchronize the hard disks (if necessary). Synchronization may take up to 50 minutes.

5 Load LD 135 and get the status of the CPs (Core Processors), CNIs, and memories.

LD 135	
STAT CPU	Get the status of both CPs and memories.
STAT CNI	Get the status of all configured CNIs.

6 Test the standby (inactive) CP. Then switch CPs, and test again.

TEST CPU	Test the standby (inactive) CP.
SCPU	Switch CPs.
TEST CPU	Test the standby (inactive CP).

Note: Testing the CPs can take up to 20 minutes for each test. When the test is complete, the memories are automatically synchronized.

7 Be sure CP 0 is active and CP1 is standby. You may need to switch CPs again:

STAT CPU

8 Verify that CMDU 0 is active. You may need to switch CMDUs.

LD 137	
STAT	Get the status of CMDU and IOP.
SWAP	Switch CMDUs (if necessary).

9 Connect a terminal to the CPSI port in Core 1 to J25 of the I/O panel at the back of the core. Be sure it is configured as follows. The recommended baud rate is 9600, to be the same as the CPSI port.

- 7 data bits
- 1 stop bit
- Space parity
- Full duplex
- XON protocol

10 Place CP 0 in Maintenance by setting the MAINT/NORM switch to MAINT.

11 In Core 1, disable the NT6D65 Core to Network Interface (CNI) cards by setting the ENB/DIS faceplate switches to DIS.

12 In Core 1, set the ENB/DIS switch on the IOP or IOP/CMDU to DIS. Remove the IOP or IOP/CMDU and replace the QMM42 data cartridge with the **Target** cartridge.

13 In Core 1, reseat the IOP or IOP/CMDU, and set the faceplate switch to ENB.

14 Install Target installation disk 1 (labeled A1) into the CMDU or IOP/CMDU in Core 1.

15 In Core 1, perform the following three steps in uninterrupted sequence:

- press and hold the MAN RST button on the CP card
- set the MAINT/NORM switch on the CP card to MAINT
- release the MAN RST button

A sysload will begin (cold start) and the system will automatically load the software install program.

Note: If you need more complete information, refer to Procedure 11: Software Installation Tool.

16 When the Main Menu appears, select the following options in sequence when you are prompted to do so:

<a>	to install software CP-BOOT ROM and IOP-ROM (for NT6D66 CP cards) **or** CP-BOOT ROM and IOP-ROM (for NT9D19 CP, NT5D10 or NT5D03 cards)
<y>	to start installation
<a>	to continue with upgrade

17 Follow all screen directions requiring disk insertion from the software upgrade package into CMDU 1 or IOP/CMDU 1. A number of disks will be requested.

18 Following the software installation, select the following options:

<a>	to continue with ROM upgrade
<a>	to continue with ROM upgrade (CP-BOOT ROM)
<y>	to start installation
<a>	to continue with ROM upgrade (IOP-ROM)

19 Remove any diskettes from CMDU 1 or IOP/CMDU 1.

20 Select the following options to quit and reload the system:

<q>	to quit
<y>	to confirm quit
<a>	to reboot the system

The system will automatically perform a sysload and system initialization during which several messages will appear on the system terminal.

Note: SYS4695 is not an error message. This message is cleared when you perform a datadump.

Following system initialization, perform the steps in “Completing the parallel reload on the option 61C/81/81C” on page 106 to complete the software conversion.

If the system fails to load, or system messages indicate data corruption, back out of the parallel reload process by performing the steps in “Backing out of the parallel reload on the option 61C/81/81C” on page 111.

Completing the parallel reload on the option 61C/81/81C

1 If necessary, replace system patches. Contact your technical support.

2 Load LD 22 and print the **Target** peripheral software version. The **Source** peripheral software version was printed in the pre-conversion procedure. If there is a difference between the **Source** and **Target** peripheral software version, a forced download will occur during initialization when coming out of parallel reload. The system initialization will take longer and established calls on IPE will be dropped.

LD 22	
REQ	PRT
TYPE	PSWV

> **CAUTION**
> **Call processing will be interrupted**
> Perform the next steps carefully. This is the point at which your service is interrupted. Calls in process will be interrupted, especially if Peripheral Software Download takes place.

Perform the next 4 steps in succession. Call processing will be switched from Core 0 to Core 1.

3 In Core 0, set the DIS/ENB faceplate switch on the IOP or IOP/CMDU card to DIS.

4 In Core 0, disable the NT6D65 CNI cards by setting the ENB/DIS faceplate switches to DIS.

5 In Core 1, enable the NT6D65 CNI cards by setting the ENB/DIS faceplate to ENB.

6 In Core 1, press the MAN INT button.

7 Test call processing. This includes, but is not limited to, the following.

Check for dial tone.
Make internal, external, and network calls.
Check attendant console activity.
Check DID trunks.
Check any auxiliary processors.

Note: From this point forward you will be updating Core 0 with **Target** software.

8 Move the CPSI port cable from J25 on Core 1 to J25 on Core 0.

9 In Core 0, remove the IOP or IOP/CMDU card and replace the **Source** data cartridge with the **Target** cartridge.

10 Reseat the IOP or IOP/CMDU card and set the faceplate switch to ENB.

11 Insert **Target** installation disk 1 (labeled A1) into the CMDU or IOP/CMDU in Core 0.

12 On Core 0, press and release the MAN RST button.

13 Perform ***one*** of the following software/ROM upgrades, depending on whether your system is equipped with NT9D19/NT5D10/NT5D03 CP cards or NT6D66 CP cards:

For systems equipped with NT9D19, NT5D10 or NT5D03 CP cards:

— When the Main Menu appears, select the following options in sequence when you are prompted to do so:

<a>	to install software, CP-BOOT ROM and IOP-ROM
<y>	to start installation
<a>	to continue with upgrade

— Follow all screen directions requiring disk insertion into CMDU 0 or IOP/CMDU 0. A number of disks will be requested.

— Following the software installation, select the following options:

<a>	to continue with ROM upgrade
<a>	to continue with ROM upgrade (CP-BOOT ROM)
<y>	to start installation
<a>	to continue with ROM upgrade (IOP-ROM)

— Remove any diskettes from CMDU 0 or IOP/CMDU 0.

— Select the following options to quit and reload the system:

<q>	to quit
<yes>	to confirm quit
<a>	to reboot the system

The system will reboot. Wait for the “INI” and “DONE” messages to display before continuing.

Note: It will take at least 70 seconds between the “DONE” and “INI” messages.

— Continue with step 14.

For systems equipped with NT6D66 CP cards:

— From the main menu choose:

<e>	to upgrade the CP ROM
<y>	to start installation
<b>	to upgrade from floppy disk (insert disk 4 when you are prompted to do so)
<y>	to continue installing CP-ROM

Follow the on-screen directions until the CP ROM upgrade is complete.

— From the main menu choose:

<f>	to upgrade the IOP ROM
<y>	to start installation
<b>	to upgrade from floppy disk

— Follow on-screen directions until the IOP ROM upgrade is complete.

— Remove any diskettes from the floppy drive.

— Select the following options to quit and reload the system:

<q>	to quit
<yes>	to confirm quit
<a>	to reboot the system

The system will reboot. Wait for the “INI” and “DONE” messages to display before continuing. It will take at least 70 seconds between the “DONE” and “INI” messages.

Note: Refer to Procedure 11: Software Installation Tool if necessary.

14 In Core 0, enable the NT6D65 CNI cards by setting the ENB/DIS faceplate switches to ENB.

15 In Core 0, perform the following steps in uninterrupted sequence:

- press and release the MAN RST button
- when SYS700 messages appear on CP 0 LCD display, set the MAINT/NORM switch to NORM.

Within 60 seconds, the LCD will display the following messages, confirming the process.

RUNNING ROM OS
ENTERING CP VOTE

An “HWI534” message from the CPSI or SDI port indicates the start of memory synchronization. Within 10 minutes, an HWI533 message on Core 1 CPSI or SDI TTY indicates the memory synchronization is taking place. Wait until the memory synchronization is complete before continuing.

16 Set the MAINT/NORM switch on the CP card in Core 1 to NORM and perform a redundancy sanity test.

LD 135	
STAT CNI	Get status of CNI cards.
STAT CPU	Get status of CPU and memories.
TEST CNI core slot	Test each inactive CNI card.

Note: Testing the CPs and CNI cards and synchronizing memory can take up to 20 minutes for each test. When the CP test is complete, the memories are automatically synchronized.

17 Switch Cores, and test the other side.

TEST CPU	Test the standby (inactive) Core.
SCPU	Switch Cores.
TEST CNI core slot	Test each inactive CNI card.

Note: Testing the CP cards can take up to 20 minutes for each test. When the test is complete, the memories are automatically synchronized.

18 Clear the display, and minor alarms on both Cores.

CDSP	Clear the displays on the Cores.
CMAJ	Clear major alarm.
CMIN ALL	Clear minor alarm.

19 Get the status of the Cores, CNIs, and memories

STAT CPU	Get the status of both Cores.
STAT CNI	Get the status of all configured CNIs and memories.

20 Load LD 137 and synchronize hard disks. Synchronization may take up to 50 minutes. To be sure that the contents of CMDU 1 are copied to CMDU 0, verify that CMDU 0 is disabled.

LD 137	
STAT	Get the status of both CMDUs, IOPs, and redundancy.
SYNC	Enter “Yes” to synchronize disks. Wait until the memory synchronization successfully completes before continuing.

21 Get the status of the CMDUs and be sure CMDU 0 is active. Switch if necessary.

LD 137	
STAT	Get the status of CMDU and IOP.
SWAP	Switch CMDU (if necessary).
STAT CMDU	Get the status of the CMDUs. Be sure the same CMDU and CPU are active.

22 Insert the B1 disk into both IOP/CMDUs or CMDUs for backup. Load LD 43 and datadump. This creates a backup on the floppy disk in the active CMDU.

LD 43
EDD
Data dump complete (or database backup complete) is printed when the data dump has been successfully completed. Investigate any EDD messages. Refer to *X11 input/output guide* (553-3001-400).

You are now done with your parallel reload. Go to "Procedure 12: Postconversion procedure" on page 301.

Backing out of the parallel reload on the option 61C/81/81C

1 Place the original **Source** installation disk 1 in CMDU or IOP/CMDU in Core 1.

2 In Core 1, set the ENB/DIS switch on the NT6D63 IOP or NT5D20 IOP/CMDU to DIS. Remove the card and replace the data cartridge with the **Source** cartridge.

3 In Core 1, reseat the IOP or IOP/CMDU and set the faceplate switch to ENB.

4 In Core 1, press the MAN RST button.

5 When the install screen appears, select the following options in sequence, and insert the **source** B diskette containing the customer database when you are prompted to do so.

<b> to install software, database, CP-ROM, and IOP-ROM
<a> to start installation
<a> continue with upgrade

Follow all screen direction requiring disk insertion. A number of disks will be requested.

6 When the database installation screen appears, select the following:

<c> to transfer the previous system database (DBMT) (choose this option if the database was converted on-site)

or

<a> to install customer database (choose this option if the database was sent to Northern Telecom for conversion)

<a> to continue with the database install

<y> to delete the hardware infrastructure database files from the hard disk

7 When the ROM installation screen appears, select the following:

<a> to continue with the ROM upgrade

8 Following the database installation, upgrade the ROMs:

<a> to continue with ROM upgrade (CP-BOOT)

<y> to start installation

<a> to continue with ROM upgrade (IOP-ROM)

9 Remove the disk from the IOP/CMDU or CMDU in Core 1.

10 From the main menu, select the following options to quit and reload the system:

<q> to quit

<y> to confirm quit

11 Remove any diskettes from the floppy drive, and type

<a> to reboot the system

12 In Core 1, perform the following steps:

- enable the NT6D65 CNI cards by setting the ENB/DIS faceplate switches to ENB
- press and release the MAN RST button on the CP card

When SYS700 messages appear on the CP 1 LCD display

- set CP 1 MAINT/NORM switch to NORM.

Within 60 seconds, the LCD will display the following messages, confirming the process.

RUNNING ROM OS
ENTERING CP VOTE

An “HWI534” message from the CPSI or SDI port indicates the start of memory synchronization. Within 10 minutes, an “HWI533” message on Core 0 CPSI or SDI TTY indicates the memory synchronization is complete. Wait until the memory synchronization is complete before continuing.

13 In Core 0, set the MAINT/NORM switch on the CP card to NORM.

14 Perform a redundancy sanity test.

LD 135	
TEST CPU	Test the standby (inactive) Core.
SCPU	Switch the Cores.
CDSP	Clear display.
TEST CPU	Test the standby (inactive) Core.
SCPU	Switch the Cores.

Note: Testing the CPs can take up to 20 minutes for each test. When the test is complete, the memories are automatically synchronized.

15 Load LD 137 and synchronize hard disks. Synchronization may take up to 50 minutes. To be sure the contents of CMDU 0 are copied to CMDU 1, use the STAT command to verify that CMDU 1 is disabled.

LD 137	
STAT CMDU	Get the status of both CMDUs.
SYNC	Synchronize disks.

You are now out of the parallel reload process, and have returned to the **Source** software. Go to “Procedure 12: Postconversion procedure” on page 301.

Parallel reload the NT/RT/61

1 Perform the pre-conversion steps as shown in “Procedure 1: Preconversion procedure” on page 35.

2 Load LD 35 and get the status of the CPU, CMA, extenders, and memory. Ensure all common equipment is enabled.

LD 35	
STAT CPU	Get the status of the CPUs.
STAT CMA	Get CMA status.
STAT EXT	Get the extender status.
STAT MEM	Get the memory status.

3 Test and switch CPUs.

TCPU	Test the CPUs.
SCPU	Switch the CPUs.

4 Get the status of the other CPU, CMA, extenders, and memory. Ensure all common equipment is enabled.

STAT CPU	Get the status of the CPUs.
STAT CMA	Get CMA status.
STAT EXT	Get the extender status.
STAT MEM	Get the memory status.

5 Ensure CPU 0 is enabled (CPU 1 is idle).

6 If equipped, set the QPC84 Power Monitor card ENL/DIS faceplate switch to DIS. Do not remove the card.

7 Place CPU 0 into Maintenance by setting the MAINT/NORM faceplate switch to MAINT.

8 List the enabled memory. Disable the memory and CMA in CPU 1.

LENL	List enabled memory.
DIS 10	Disable CPU 1 memory.
DIS CMA 1	Disable CMA 1.
********	to exit the program

9 Type **DIST**. This software-disables the QPC584/QPC742 in CPU 0.

10 If using the QPC775 Clock Controller card, software disable clock 1. Then hardware disable clock controller 1.

LD 60	get the status of clock 0
SSCK 0	get the status of clock 1
SSCK 1	switch system clock to make clock 0 active (if necessary)
DIS CC 1	disable clock controller 1
********	to exit the program

11 Set the QPC584/QPC742 ENB/DIS faceplate switch to DIS in CPU 0.

12 Get a temporary Serial Data Interface card. For option 61 systems, a Serial Data Interface paddle board may be used. Use a spare. Verify the baud rate. If it does not match the TTY, output characters may be garbled. Be sure the card is configured exactly as the existing maintenance TTY device.

13 Place the temporary SDI card in a vacant slot in CPU 1. If using the SDI paddle board, place it in slot 12 in the rear of CPU 1.

14 Set the temporary SDI card ENB/DIS faceplate switch to ENB. Connect a local TTY, or a modem for a remote TTY, to the temporary SDI card.

15 If an MDU is equipped, set the QPC584 card ENB/DIS faceplate switch to DIS in CPU 1. Remove the card and set switch 3, position 4 (SW3-4) to OFF. Reinsert the card and reenable the ENB/DIS faceplate switch.

16 Place CPU 1 into Maintenance by setting the MAINT/NORM switch to MAINT. This will cause a sysload. If the sysload does not begin, press the RLD button on CMA 1 **only**.

The following messages will print out on your TTY. The CMA and SDI lights will go out, and the disk drives will run. The following SYS messages will appear (may differ slightly depending on the X11 release).

SYS000
SYS092
SYS093
SYS511
SYS091
SYS090
SYSLOAD RLS: xx
ISSUE: x

DONE

INI000

Note: When sysload is complete, midnight (daily) routines will begin. Logging in to the system temporarily interrupts the midnight routines.

At this time you can begin your software conversion. See "Procedure 2: Converting from X11 release 8 or 9 to X11 release 10" on page 43 through "Procedure 5: Using a three-disk or four-disk configuration" on page 93.

To complete the parallel reload process, go to "Completing the parallel reload on the NT/RT/61" on page 118.

If the system fails to load, or SYSxxxx messages indicate data corruption, back out of the parallel reload process by performing the following steps.

Backing out of the parallel reload on the NT/RT/61

1 Place CPU 1 into Normal by setting the MAINT/NORM faceplate switch to NORM.

2 Reconnect the CRT or TTY cable to the original port. Disable and unseat the temporary SDI card from CPU 1.

If an MDU is equipped, return the QPC584 in CPU 1 to its original state: disable, remove, and set SW3-4 to ON. Reinsert the card.

3 Set the QPC584/QPC742 card ENB/DIS faceplate switch to ENB in CPU 0.

4 Log in and type **ENLT**. This software-enables the QPC584/QPC742 card.

5 List disabled memories. Enable the CMA, and memory in CPU 1. Enabling the memories may take several minutes.

LD 35	
LENL	List the enabled memories.
ENL CMA 1	Enable the CMA in CPU 1.
ENL 10	Enable the memory in CPU 1.

6 Get the status of the CPU, CMA, extenders, and memory. Ensure all common equipment is enabled. Clear the displays and minor alarms.

STAT CPU	Get the status of the CPUs.
STAT CMA	Get CMA status.
STAT EXT	Get the extender status.
STAT MEM	Get the memory status.
CDSP	Clear the displays.
CMIN ALL	Clear all minor alarms.

7 Place CPU 0 into Normal by setting the MAINT/NORM switch to NORM.

8 Test twice and switch CPUs.

TCPU	Test the CPUs.
TCPU	Test the CPU again.
SCPU	Switch the CPUs.
CDSP	Clear display in CPU 1.
********	Get out of overlay.

9 Type **ENLT**. This software-enables the QPC584/QPC742 card.

10 Load LD 35. Test and switch CPUs.

LD 35	
TCPU	Test the CPUs.
SCPU	Switch the CPUs.

11 Type ******** to exit overlay.

12 Set the QPC84 Power Monitor card ENB/DIS faceplate switch to ENB (if equipped).

You are now out of the parallel reload process. Verify system operation. Refer to “Procedure 12: Postconversion procedure” on page 301.

Completing the parallel reload on the NT/RT/61

When you have finished converting the software according to Procedures 2 through 5, use these steps to complete the parallel reload process.

1 Log in to the system on CPU 1.

2 Set the time and date in LD 02. Note that if Call Detail Recording (CDR) is used system message ERR225 will appear. This is normal.

Note: The system stops time when coming out of parallel reload. Up to 90 seconds may be lost. Verify the time when this procedure is complete.

LD 02
STAD dd mm yyyy hh mm ss Set Time and Date
dd = day (for example, 05 for the fifth)
mm= month (for example, 09 for September)
yyyy = year (last 2 digits or all four, for example 92 or 1992)
hh hour (in 24-hour time, for example, 13:00 for 1:00 pm)
mm= minute (for example, 25)
ss seconds (for example, 00)

3 Load LD 22 and print **Target** peripheral software version. The **Source** peripheral software version was printed in the pre-conversion procedure. If there is a difference between the **Source** and **Target** peripheral software version, a forced download will occur during initialization when coming out of parallel reload. The system initialization will take longer and established calls on IPE will be dropped.

LD 22
REQ PRT
TYPE PSWV

4 Disable and unseat the temporary SDI card from CPU 1. Reconnect the CRT or TTY cable to the original port.

CAUTION
Call processing will be interrupted.
Perform these next steps carefully. This is the point at which your service is interrupted. Calls in process will be interrupted, especially if Peripheral Software Download takes place.

Perform the next two steps in succession.
This is the point at which call processing is interrupted; some calls may be dropped.

5 Place CPU 0 into Normal by setting the MAINT/NORM faceplate switch to NORM.

6 Initialize CPU 1 by pressing the MAN INT button.

If the system does not initialize within 20 seconds, press the MAN INT button one more time.

Some cards require peripheral software download after initialization. When these cards are present and the peripheral software versions have changed, wait for PSDL completion messages before continuing.

7 Test call processing. This test includes, but is not limited to, the following:

Make internal, external, and network calls.
Check attendant console activity.
Check DID trunks.

8 Log back in and verify time and date. Update the time and date if necessary.

LD 02	
TTAD	Verify time and date.
STAD dd mm yyyy hh mm ss	Set Time and Date.
TTAD	Verify time and date.

9 List disabled memory. Enable CMA and memory in CPU 0. Enabling the memory may take several minutes.

LD 35	
LDIS	List disabled memory.
ENL CMA 0	Enable CMA 0.
ENL 00	Enable the memory in CPU 0.

10 Clear the display, and minor alarm.

CDSP	Clear the displays on CPU 1.
CMAJ	Clear major alarm.
CMIN ALL	Clear minor alarm.

11 Place CPU 1 into Normal by setting the MAINT/NORM faceplate switch to NORM.

12 Get the status of the CPU, CMA, extenders, and memory. Ensure all common equipment is enabled.

STAT CPU	Get the status of the CPUs.
STAT CMA	Get CMA status.
STAT EXT	Get the extender status.
STAT MEM	Get the memory status.

13 Test and switch CPUs. Clear the display and test again.

TCPU	Test the CPUs.
SCPU	Switch the CPUs.
CDSP	Clear the displays.
TCPU	Test the CPUs.
SCPU	Switch the CPUs.

14 Get the status of the CPU, CMA, extenders, and memory. Ensure all common equipment is enabled.

STAT CPU	Get the status of the CPUs.
STAT CMA	Get CMA status.
STAT EXT	Get the extender status.
STAT MEM	Get the memory status.

15 Type ******** to exit overlay.

16 Remove the QPC584/QPC742 card. Replace the **Source** data cartridge with the **Target** cartridge. Reinsert the card.

17 Set the QPC584/QPC742 card ENB/DIS faceplate switch to ENB in CPU 0.

18 Type **ENLT.** This software-enables the QPC584/QPC742 card.

19 Load an overlay to verify data cartridge operation.

20 Set the QPC84 Power Monitor card ENB/DIS faceplate switch to ENB, if equipped.

You are now done with your parallel reload.

Now go to “Procedure 12: Postconversion procedure” on page 301.

Parallel reload the XT/71

1 Perform the pre-conversion steps as shown in “Procedure 1: Preconversion procedure” on page 35.

2 Load LD 35 and get the status of the CPU, CMA, extenders, and memory. Ensure all common equipment is enabled.

LD 35	
STAT CPU	Get the status of the CPUs.
STAT CMA	Get CMA status.
STAT EXT	Get the extender status.
STAT MEM	Get the memory status.

3 Test and switch CPUs.

TCPU	Test the CPUs.
SCPU	Switch the CPUs.

4 Get the status of the other CPU, CMA, extenders, and memory. Ensure all common equipment is enabled.

STAT CPU	Get the status of the CPUs.
STAT CMA	Get CMA status.
STAT EXT	Get the extender status.
STAT MEM	Get the memory status.

5 Ensure CPU 0 is enabled (CPU 1 is idle).

6 If equipped, set the QPC84/QPC173 Power Monitor card (in the CPU cabinet) ENL/DIS faceplate switch to DIS. Do not remove the card.

7 Place CPU 0 into Maintenance by setting the MAINT/NORM faceplate switch to MAINT.

8 List the enabled memories. Then disable the memories and CMA in CPU 1.

LENL	List enabled memories.
DIS 10	Disable CPU 1 memory (10, 11, 12 if equipped).
DIS CMA 1	Disable CMA 1.

9 Set the QPC215 Segmented Bus Extenders (SBE) ENB/DIS faceplate switch to DIS in CPU 1.

10 If using the QPC775 Clock Controller card, load LD 60 and software-disable clock 1. Then hardware-disable clock controller 1.

LD 60	
SSCK 0	Get the status of clock 0.
SSCK 1	Get the status of clock 1.
SWCK	Switch system clock to make clock 0 active (if necessary).
DIS CC 1	Disable clock controller 1.

Set the QPC775 ENB/DIS faceplate switch to DIS in CPU 1.

11 Type ******** to exit overlay.

12 Type **DIST**. This software-disables the QPC584/QPC742 in CPU 0.

13 Set the QPC584/QPC742 ENB/DIS faceplate switch to DIS in CPU 0.

14 Get a temporary Serial Data Interface card. Use a spare. Verify the baud rate. If it does not match the TTY, output characters may be garbled. Be sure the card is configured exactly as the existing maintenance TTY device.

15 Place the temporary SDI card in any vacant **non-memory** slot in CPU 1.

16 Set the temporary SDI card ENB/DIS faceplate switch to ENB. Connect a local TTY, or a modem for a remote TTY, to the temporary SDI card.

17 If an MDU is equipped, set the QPC584 card ENB/DIS faceplate switch to DIS in CPU 1. Remove the card and set switch 3, position 4 (SW3-4) to OFF. Reinsert the card and reenable the ENB/DIS faceplate switch.

18 Set the MAINT/NORM switch to MAINT in CPU 1. This will cause a sysload. If the sysload does not begin, press the RLD button on CMA 1 **only**.

The following messages will print out on your TTY. The CMA and SDI lights will go out, and the disk drives will run. The following SYS messages will appear (may differ slightly depending on the X11 release). Check for dial tone following the DONE and INI000 messages.

SYS000
SYS092
SYS093
SYS511
SYS091
SYS090
SYSLOAD RLS: xx
ISSUE: x

DONE

INI000

Note: When sysload is complete, midnight (daily) routines will begin. Logging in to the system temporarily interrupts the midnight routines.

At this time you can begin your software conversion. See Procedures 2 through 5 in this document.

To complete the parallel reload process, go to “Completing the parallel reload on the XT/71” on page 126.

If the system fails to load, or SYSxxxx messages indicate data corruption, back out of the parallel reload process by performing the following steps.

Backing out of the parallel reload on the XT/71

1 Place CPU 1 into Normal with the MAINT/NORM faceplate switch.

2 Reconnect the CRT or TTY cable to the original port. Disable and unseat the temporary SDI card from CPU 1.

If an MDU is equipped, return the QPC584 in CPU 1 to its original state: disable, remove, and set SW3-4 to ON. Reinsert and enable the card.

3 Set the QPC584/QPC742 card ENB/DIS faceplate switch to ENB in CPU 0.

4 Log in and type **ENLT**. This software enables the QPC584/QPC742 card.

5 List disabled memories. Enable the CMA, and enable memories in CPU 1. Enabling the memories may take several minutes.

LD 35	
LENL	List the enabled memories.
ENL CMA 1	Enable the CMA in CPU 1.
ENL 10	Enable the memory in CPU 1 (10, 11, 12 if equipped).

6 Get the status of the CPU, CMA, extenders, and memory. Ensure all common equipment is enabled. Clear the displays and minor alarms.

STAT CPU	Get the status of the CPUs.
STAT CMA	Get CMA status.
STAT EXT	Get the extender status.
STAT MEM	Get the memory status.
CDSP	Clear the displays.
CMIN ALL	Clear all minor alarms.

7 Set the QPC215 SBE ENB/DIS faceplate switch to ENB in CPU 1.

8 Place CPU 0 into Normal by setting the MAINT/NORM faceplate switch to NORM.

9 Test twice and switch CPUs.

TCPU	Test the CPUs.
TCPU	Test the CPU again.
SCPU	Switch the CPUs.
CDSP	Clear display in CPU 1.
********	Get out of overlay.

10 Type **ENLT**. This software-enables the QPC584/QPC742 card.

11 Load LD 35. Test and switch CPUs.

LD 35	
TCPU	Test the CPUs.
SCPU	Switch the CPUs.

12 Type ******** to exit overlay.

13 If using the QPC775 Clock Controller card, hardware-enable clock controller 1. Load LD 60 and enable clock 1 in the software.

Set the QPC775 ENB/DIS faceplate switch to ENB in CPU 1.

LD 60	
ENL CC 1	Enable clock controller 1**.**
SSCK 0	Get the status of clock 0.
SSCK 1	Get the status of clock 1.

If using the QPC471, Clock Controller card, and PRI/DTI is equipped, load LD 60. Check clock tracking status. If necessary, force the clock to track on primary reference.

LD 60	
SSCK 0	Get the system clock status for clock 0.
SSCK 1	Get the system clock status for clock 1. If the clock is not tracking, DTI061 is printed.
TRCK PCK	Force the clock to track on primary reference.

14 If equipped, set the QPC84/QPC173 Power Monitor card (in the CPU cabinet) ENB/DIS faceplate switch to ENB.

You are now out of the parallel reload process. Verify system operation. Refer to “Procedure 12: Postconversion procedure” on page 301.

Completing the parallel reload on the XT/71

When you have finished converting the software according to Procedures 2 through 5, use these steps to complete the parallel reload process.

1 Log in to the system on CPU 1.

2 Set the time and date in LD 02. Note that if Call Detail Recording (CDR) is used, system message ERR225 will appear. This is normal.

Note: The system stops time when coming out of parallel reload. Up to 90 seconds may be lost. Verify the time when this procedure is complete.

LD 02
STAD dd mm yyyy hh mm ss Set Time and Date.
dd = day (for example, 05 for the fifth)
mm = month (for example, 09 for September)
yyyy = year (complete, for example, 1991)
hh = hour (in 24-hour time, for example, 13:00 for 1:00 pm)
mm = minute (for example, 25)
ss = seconds (for example, 00)

3 Load LD 22 and print **Target** peripheral software version. The **Source** peripheral software version was printed in the pre-conversion procedure. If there is a difference between the **Source** and **Target** peripheral software version, a forced download will occur during initialization when coming out of parallel reload. The system initialization will take longer and established calls on IPE will be dropped.

LD 22
REQ PRT
TYPE PSWV

4 If using the QPC775 Clock Controller card, hardware-enable clock controller 1. Load LD 60 and enable clock 1 in the software.

Set the QPC775 ENB/DIS faceplate switch to ENB in CPU 1.

LD 60
ENL CC 1 Enable clock controller 1**.**
SSCK 0 Get the status of clock 0.
SSCK 1 Get the status of clock 1.

5 Disable and unseat the temporary SDI card from CPU 1. Reconnect the CRT or TTY cable to the original port.

6 Set the QPC215 SBEs ENB/DIS faceplate switches to ENB in CPU 1.

> **CAUTION**
> **Call processing will be interrupted.**
> Perform the next steps carefully. This is the point at which your service is interrupted. Calls in process will be interrupted, especially if Peripheral Software Download takes place.

Perform the next 2 steps in succession.
This is the point at which call processing is interrupted; some calls may be dropped.

7 Set the QPC215 SBE ENB/DIS faceplate switch to DIS in CPU 0.

8 Initialize CPU 1 by pressing the MAN INT button.

If the system does not initialize within 20 seconds, press the MAN INT button again.

Some cards require peripheral software download after initialization. When these cards are present and the peripheral software versions have changed, wait for PSDL completion messages before continuing.

9 Test call processing. This includes, but is not limited to, the following.

Make internal, external, and network calls.
Check attendant console activity.
Check DID trunks.

10 Set the QPC215 SBE ENB/DIS faceplate switch to ENB in CPU 0.

11 Place CPU 0 into Normal by setting the MAINT/NORM faceplate switch to NORM.

12 Log back in and verify time and date. Update the time and date if necessary.

LD 02	
TTAD	Verify time and date.
STAD dd mm yyyy hh mm ss	Set Time and Date.
TTAD	Verify time and date.

13 Replace the QPC583 or NTND09BA memory card with the NTND09CA 12 MB memory card.

14 List disabled memories. Enable CMA, and enable memories in CPU 0. Enabling the memories may take several minutes.

LD 35	
LDIS	List disabled memories.
ENL CMA 0	Enable CMA 0.
ENL 00	Enable the memory in CPU 0 (00, 01, 02 if equipped).

15 Clear the display and minor alarms.

CDSP	Clear the displays on CPU 1.
CMAJ	Clear major alarm.
CMIN ALL	Clear minor alarms for all customers.

16 Place CPU 1 into Normal by setting the MAINT/NORM faceplate switch to NORM.

17 Get the status of the CPU, CMA, extenders, and memory. Ensure all common equipment is enabled.

STAT CPU	Get the status of the CPUs.
STAT CMA	Get CMA status.
STAT EXT	Get the extender status.
STAT MEM	Get the memory status.

18 Test and switch CPUs. Clear the display and test again.

TCPU	Test the CPUs.
SCPU	Switch the CPUs.
CDSP	Clear the displays.
TCPU	Test the CPUs.
SCPU	Switch the CPUs.

19 Get the status of the CPU, CMA, extenders, and memory. Ensure all common equipment is enabled.

STAT CPU	Get the status of the CPUs.
STAT CMA	Get CMA status.
STAT EXT	Get the extender status.
STAT MEM	Get the memory status.

20 Type ******** to exit overlay.

21 Remove the QPC584/QPC742 card. Replace the **Source** data cartridge with the **Target** cartridge. Reinsert the card.

22 Set the QPC584/QPC742 card ENB/DIS faceplate switch to ENB in CPU 0.

23 Type **ENLT.** This software-enables the QPC584/QPC742 card.

24 If using the QPC471 Clock Controller card and PRI/DTI is equipped, load LD 60. Check clock tracking status. If necessary, force the clock to track on primary reference.

LD 60	
SSCK 0	Get the system clock status for clock 0.
SSCK 1	Get the system clock status for clock 1. If the clock is not tracking, DTI061 is printed.
TRCK PCK	Force the clock to track on primary reference.

25 Set the QPC84/QPC173 Power Monitor card (in CPU cabinet) ENB/DIS faceplate switch to ENB, if equipped.

You are now done with your parallel reload. Go to “Procedure 12: Postconversion procedure” on page 301.

Procedure 7:
CD-ROM software conversion

CAUTION
To avoid damaging equipment from electrostatic discharge, wear a properly connected anti-static wrist strap when working on or near Meridian 1 equipment.

Use the procedures in this section if your system is equipped with NT5D61 Input Output Disk Unit with CD-ROM (IODU/C) card(s). If your system is not equipped with the IODU/C card, do not use these procedures.

The procedures in this section describe how to:

- convert one X11 release to a later release
- perform a software upissue within in the same X11 release
- add new features
- modify Incremental Software Management (ISM) limits

To better understand the process, read through the entire procedure before you begin.

Parallel reload the 61C/81/81C

> ***Note:*** This procedure does not include instructions for installing new IODU/C cards. To use this procedure, your system must already be equipped with IODU/C cards.

Use the parallel reload procedures to convert from one X11 release to a later release or to upissue software within the same X11 release. These parallel reload procedures are for software conversions only. Do *not* use this procedure for any other purpose. Parallel reloads can be done from either CPU. For the purposes of this document, we begin with CPU 0.

Table 11 summarizes the required steps to perform this procedure.

Table 11
Option 61C, 81, 81C parallel reload summary

Step	Page
1. Verify memory	page 133
2. Perform a data dump	page 133
3. STAT the hardware	page 134
4. Split the Cores	page 135
5. Install software on Core/Net 1	page 136
6. Check for peripheral software download	page 138
7. Switch call processing from Core/Net 0 to Core/Net 1	page 139
8. Test Core/Net 1	page 139
9. Install software on Core/Net 0	page 139
10. Exit split mode	page 141
11. Test Core/Net 0 and 1	page 142
12. Synchronize the hard disks	page 143
13. Perform a data dump	page 144

Verify memory

Determine whether your system requires additional memory. Refer to “Procedure 10: Increasing memory” on page 169 for memory requirements and upgrade procedures.

Perform a data dump

1 Load the Equipment Data Dump Program (LD 43). At the prompt, enter

LD 43	to load the program

2 When “EDD000” appears on the terminal, enter

EDD	to begin the data dump

3 When “DATABASE BACKUP COMPLETE” or “DATADUMP COMPLETE” appears on the terminal, enter

********	to exit the program

CAUTION

If the data dump is not successful, do not continue; contact your technical support organization. A data dump problem must be corrected before proceeding.

STAT the hardware

1 Load LD 137 and get status of the hard disks.

Note: Be sure the hard disks are synchronized. If not, synchronize before proceeding.

LD 137	
STAT	Get the status of the hard disks
SYNC	Synchronize hard disks if necessary. Synchronization may take up to 50 minutes
TEST CMDU	Performs hard and floppy disk test.
********	exit program

2 Load LD 135 and get status of the CPs, CNIs and memories.

LD 135	
STAT CPU	Get the status of both CPs and memory
STAT CNI	Get the status of all configured CNIs

3 Test the standby (inactive) CP. Then switch CPs, and test again.

TEST CPU	Test standby (inactive) CP

Wait until the terminal returns a complete test message. The message “HWI533 or HWI534” does not mean the test has completed!

SCPU	Switch CPs
TEST CPU	Test the standby (inactive) CP

Note: Testing the CPs can take up to 20 minutes for each test. When the test is complete, the memories are automatically synchronized.

Split the Cores

1 Be sure CP 0 is active and CP1 is standby. You may need to switch CPs again:

STAT CPU	
********	exit program

2 Verify that IODU/C 0 is active. You may need to switch IODU/Cs.

LD 137	
STAT	Get the status of IODU/C
SWAP	Switch IODU/Cs if necessary
********	exit program

3 Connect a terminal to the CPSI port in Core/Net 1 to J25 of the I/O panel at the back of the Core/Net. Be sure it is configured as follows. The recommended baud rate is 9600, to be the same as the CPSI port.

7 data bits, 1 stop bit, Space parity, Full duplex, XON protocol

4 Place CP 0 in Maintenance by setting the MAINT/NORM switch to MAINT.

5 In Core/Net 1, disable the NT6D65 Core/Net to Network Interface (CNI) cards by setting the ENB/DIS faceplate switches to DIS.

Install software on Core/Net 1

1 Place the CP Install disk that corresponds with the installed CP card type into the IODU/C in Core/Net 1.

2 Install the CD-ROM into the CD drive:

- press the button on the CD-ROM drive to open the CD-ROM disk holder
- place the CD-ROM disk into the holder with the disk label showing
- use the four tabs to secure the CD-ROM drive
- press the button again to close the CD-ROM disk holder (don't push the holder in by hand)

3 In Core/Net 1, perform the following three steps in uninterrupted sequence:

- press and hold the MAN RST button on the CP card
- set the MAINT/NORM switch on the CP card to MAINT
- release the MAN RST button

A sysload will begin (cold start). Wait for the Main Menu to appear on the terminal before proceeding.

Note 1: If the CD-ROM is not in the CD drive of the IODU/C, the installation procedure will not continue. Please insert the CD-ROM into the drive to continue.

Note 2: If a problem is detected during the system verification, Install stops, prints an error message, and aborts the installation. If the verification is not successful, do not continue; contact your technical support organization.

4 Press <CR> to continue.

5 Log into the system and enter the time and date, when prompted.

6 Initiate the database installation by selecting the following command from the menu:

<u> to Install menu

7 Remove the CP Install Program diskette and insert the Keycode diskette, when prompted.

<a> to continue with keycode validation

<y> to confirm that the keycode matches the CD-ROM release

8 When the Install Menu is displayed, select the following options in sequence when you are prompted to do so

<b> to install software, database, CP-BOOT ROM, and IOP-ROM

<a> to verify that the CD-ROM is now in drive

The Installation Status Summary screen appears that lists the options to be installed.

<y> Yes, start Installation

<a> Continue with Upgrade

When the ROM installation screen appears, select the following prompts in sequence:

<a> Continue with ROM Upgrade

The following message appears:

Software Release XXXX was installed successfully on Core 1. All files were copied from CDROM to the hard disk.

Please press <CR> to when ready...

<a> Continue with ROM upgrade

<a> Yes, start Installation

<a> Continue with ROM upgrade

When the Installation Status Summary screen appears, press <CR> when ready...

When the INSTALL MENU appears:

<d> To install Database only

When the database installation screen appears, insert the first 2 MB database diskettes in the IODU/C.

<a> to install the customer database

<y> to start installation

<a> to continue the database installation

<y> to load the database

<a> to continue with ROM upgrade

<cr>	Are you sure you want to continue with IOP ROM
<a>	to install the IOP-ROM from hard disk
<y>	Yes, start installation
<a>	to continue with ROM upgrade

The Installation Status Summary screen appears. Verify that CD to disk, disk to ROM, Database, CP-BOOTROM, and IOP-ROM were installed.

<cr>	press return to continue
<q>	to quit (remove any diskettes from the floppy drive)
<y>	Yes, to confirm quit
<a>	to reboot the system

The system will automatically perform a sysload during which several messages will appear on the system terminal. Wait for “DONE” and then “INI” messages to be displayed before continuing.

If the system fails to load, or system messages indicate data corruption, back out of the parallel reload process by performing the steps in “Backing out of the parallel reload on the option 61C/81/81C” on page 144.

Check for peripheral software download

1 Load LD 22 and print Target peripheral software version. The Source peripheral software version was printed during the pre-conversion procedure. If there is a difference between the Source and Target peripheral software version, a forced download will occur during initialization when coming out of parallel reload. System initialization will take longer and established calls on IPE will be dropped.

LD 22	
REQ	PRT
TYPE	PSWV
********	exit program

Switch call processing to Core/Net 1

CAUTION

Call Processing will be interrupted! Perform these next steps carefully. This is the point at which your service is interrupted. Calls in process will be interrupted, especially if Peripheral Software Download takes place. Some calls may be dropped.

Perform the next four steps in succession. Call processing will be switched from Core/Net 0 to Core/Net 1.

1 In Core/Net 0, set the DIS/ENB faceplate switch on the IODU/C card to DIS.

2 In Core/Net 0, disable the NT6D65 CNI cards by setting the ENB/DIS faceplate switches to DIS.

3 In Core/Net 1, enable the NT6D65 CNI cards by setting the ENB/DIS faceplate to ENB.

4 In Core/Net 1, press the MAN INT button.

Note: Call processing is now switched from Core/Net 0 to Core/Net 1.

Test Core/Net 1

1 Test Call Processing. This includes, but is not limited to the following:

- Check for dial tone.
- Make internal, external, and network calls.
- Check attendant console activity.
- Check DID trunks.
- Check any auxiliary processors.

Note: From this point forward you will be upgrading Core/Net 0 with new software.

Install software on Core/Net 0

1 Move the CPSI port cable from J25 on Core/Net 1 to J25 on Core/Net 0.

2 Set the IODU/C faceplate switch to ENB.

3 Insert the CP Install diskette into Core/Net 0.

4 Press the MAN RST button on the CP card in Core/Net 0 to reboot the system and start the Software Installation Tool. (The terminal displays SYSLOAD messages during file loading. When SYSLOAD is completed, the NT logo appears.)

5 When the NT logo appears, press <CR> to continue.

6 When the Main Menu appears, select the following options in sequence:

<u>	to Install menu

7 Remove the CP Install Program diskette and insert the Keycode diskette. Select the following when prompted:

<a>	to continue with keycode validation
<y>	to confirm that the keycode matches the CD-ROM release

8 When the Install Menu appears, select the following options in sequence to copy the software form Core/Net 1 to Core/Net 0, install CP-software, ROMs, and transfer the database to the redundant disk:

<o>	to copy system software from the other core
<a>	to copy /p partition from Core1 to Core 0
<a>	to continue with upgrade

When the software has copied successfully, you must install CP-software from the hard disk to Flash EEPROM, and install CP-BOOT ROM.

<CR>	press <CR> when you are ready to continue
<y>	to start installation
<a>	to continue with ROM upgrade
<y>	to start installation
<a>	to continue with ROM upgrade.

When the installation is complete, the Installation Status Summary screen appears.

<CR>	to return to the Install Menu

When the Install Menu appears, install IOP-ROM:

<f>	to install IOP-ROM only

When the Installation Status Summary screen appears:

<y>	to start installation
<y>	to continue installing IOP-ROM
<a>	to continue with ROM upgrade

When the installation is complete, the Installation Status Summary screen appears.

<CR>	to return to the Install Menu

When the Install Menu appears, install the database:

<d>	to install database only
<d>	to copy database from the redundant disk

When the Installation Status Summary screen appears:

<y>	to start installation
<a>	to continue transferring the database from the redundant disk

When the Installation Status Summary screen appears, press:

<CR>	to return to the Install Menu

When the Install Menu appears, remove any diskettes in the floppy before rebooting the system:

<q>	to quit
<y>	to confirm quit
<a>	to reboot the system

Wait for “DONE” and then “INI” messages to be displayed before continuing.

Exiting split mode

1 **Connect CPSI port or maintenance SDI port**

1 **Enable the NT6D65 CNI cards by setting the ENB/DIS faceplate switch to ENB in Core/Net 0**.

2 Perform the following in uninterrupted sequence:

- **Press and release the MAN RST button in Core/Net 0.**
- **When SYS700 messages appears on LCD display on Core/Net 0, set the MAINT/NORM switch to NORM in Core/Net 0.**

In 60 seconds, the LCD will display and confirm your processes with:

RUNNING ROM OS
ENTERING CP VOTE

An HWI534 message indicates the start of memory synchronization. In 10 minutes, an HWI533 message on Core/Net 1 CSPI or SDI terminal indicates the memory synchronization is complete.

3 **In Core/Net 1, set the MAINT/NORM switch on the CP card to NORM**.

Test Core/Net 1 and Core/Net 0

1 Perform a redundancy sanity test using the following sequence:

LD 135	
STAT CNI	Get status of CNI cards
STAT CPU	Get status of CPU and memory
TEST CPU	Test the inactive Core/Net
TEST CNI c s	Test each inactive CNI card

2 Switch Cores and test the other side (Core/Net 0)

SCPU	Switch cores
TEST CPU	Test the inactive Core/Net
TEST CNI c s	Test each inactive CNI card

Note: Testing the CP and CNI cards and synchronizing memory can take up to 20 minutes for each test. When the CP test is complete, the CP the memory is automatically synchronized.

3 Clear the display and minor alarms on both Cores.

CDSP	Clear the displays on the Cores
CMAJ	Clear major alarms
CMIN ALL	Clear minor alarms

4 Get the status of the Cores, CNIs, and memory.

STAT CPU	Get the status of both Cores
STAT CNI	Get the status of all configured CNIs and memory

Note: You may need to execute the STAT CNI command twice before receiving a response from the system.

********	exit program

Synchronize the hard disks

1 Load LD 137 and synchronize the hard disks. Synchronization may take up to 50 minutes. To be sure that the contents of IODU/C 1 are copied to IODU/C 0, verify that IODU/C 0 is disabled.

LD 137	
STAT	Get the status of the IODU/C and redundancy
SYNC	Enter "Yes" to synchronize disks. Wait until the memory synchronization successfully completes before continuing.
TEST CMDU	Performs hard and floppy disk test.

2 Get the status of the CMDU's and be sure CMDU 0 is active. Switch if necessary.

STAT	Get the status of IODU/C and redundancy
SWAP	Switch CMDU if necessary
STAT CMDU	Get the status of the IODU/Cs. Be sure the same IODU/C and CPU are active.
********	exit program

Perform a data dump

Load the Equipment Data Dump Program (LD 43). At the prompt, enter

LD 43	to load the program

3 When “EDD000” appears on the terminal, enter

EDD	to begin the data dump

4 When “DATABASE BACKUP COMPLETE” or “DATADUMP COMPLETE” appears on the terminal, enter

********	to exit the program

> **CAUTION**
> If the data dump is not successful, do not continue; contact your technical support organization. A data dump problem must be corrected before proceeding.

Backing out of the parallel reload on the option 61C/81/81C

1 Place the original **Install disk** 1 into the IODU/C in Core/Net 1.

2 In Core/Net 1, press the MAN RST button.

3 Select <u> to initiate the Install Tool.

4 Remove the CP Install diskette and insert the source keycode diskette.

5 Select <a> to continue with keycode validation.

6 When the install screen appears, select the following options in sequence, and insert the **source** database diskette when you are prompted to do so.

<b>	to install software, database, CP-BOOT ROM, and IOP-ROM
<a>	to start installation
<a>	continue with upgrade

7 When the database installation screen appears, select the following:

<c>	to transfer the previous system database (DBMT) (choose this option if the database was converted on-site)

or

<a> to install customer database (choose this option if the database was sent to Northern Telecom for conversion)

<a> to continue with the database install

<y> to delete the hardware infrastructure database files from the hard disk

8 When the ROM installation screen appears, select the following:

<a> to continue with the ROM upgrade

9 Following the database installation, upgrade the ROMs:

<a> to continue with ROM upgrade (CP-BOOT)

<y> to start installation

<a> to continue with ROM upgrade (IOP-ROM)

10 Remove the disk from the IODU/C in Core/Net 1.

11 From the main menu, select the following options to quit and reload the system:

<q> to quit

<y> to confirm quit

12 Remove any diskettes from the floppy drive, and type

<a> to reboot the system

13 In Core/Net 1, perform the following steps:

- enable the NT6D65 CNI cards by setting the ENB/DIS faceplate switches to ENB
- press and release the MAN RST button on the CP card

When SYS700 messages appear on the CP 1 LCD display

- set CP 1 MAINT/NORM switch to NORM.

Within 60 seconds, the LCD will display the following messages, confirming the process.

RUNNING ROM OS
ENTERING CP VOTE

An “HWI534” message from the CPSI or SDI port indicates the start of memory synchronization. Within 10 minutes, an “HWI533” message on Core/Net 0 CPSI or SDI TTY indicates the memory synchronization is complete. Wait until the memory synchronization is complete before continuing.

14 In Core/Net 0, set the MAINT/NORM switch on the CP card to NORM.

15 Perform a redundancy sanity test.

LD 135	
TEST CPU	Test the standby (inactive) Core/Net.
SCPU	Switch the Cores.
CDSP	Clear display.
TEST CPU	Test the standby (inactive) Core/Net.
SCPU	Switch the Cores.

Note: Testing the CPs can take up to 20 minutes for each test. When the test is complete, the memories are automatically synchronized.

16 Load LD 137 and synchronize hard disks. Synchronization may take up to 50 minutes. To be sure the contents of CMDU 0 are copied to CMDU 1, use the STAT command to verify that CMDU 1 is disabled.

LD 137	
STAT CMDU	Get the status of both CMDUs.
SYNC	Synchronize disks.
TEST CMDU	Performs hard and floppy disk test.

You are now out of the parallel reload process, and have returned to the **Source** software.

Option 51C software conversion

Use this procedure to convert from one X11 software release to another on option 51C systems only.

Table 11 summarizes the required steps to perform this procedure.

Table 12
Option 51C software conversion summary

Step	Page
1. Verify memory	page 133
2. Perform a data dump	page 133
3. STAT the hardware	page 134
4. Install software	page 136
5. Check for peripheral software download	page 138
6. Test the system	page 139
7. Perform a data dump	page 144

Verify memory

Determine whether your system requires additional memory. Refer to "Procedure 10: Increasing memory" on page 169 for memory requirements and upgrade procedures.

Perform a data dump

1 Load the Equipment Data Dump Program (LD 43). At the prompt, enter

LD 43 to load the program

2 When "EDD000" appears on the terminal, enter

EDD to begin the data dump

3 When “DATABASE BACKUP COMPLETE” or “DATADUMP COMPLETE” appears on the terminal, enter

********	to exit the program

> **CAUTION**
> If the data dump is not successful, do not continue; contact your technical support organization. A data dump problem must be corrected before proceeding.

STAT the hardware

1 Load LD 137 and get status of the hard disk.

LD 137	
STAT	Get the status of the hard disks

2 Load LD 135 and get status of the CP, CNI and memory.

LD 135	
STAT CPU	Get the status of the CP and memory
STAT CNI	Get the status of the CNI

Install software

1 Select the CP Install diskette which matches the Call Processor (CP) type on your system.

2 Insert the CP Install diskette into the floppy drive of the IODU/C.

3 Press MAN RST on the CP card.

The system will be booted from the floppy and the Install tool will be automatically invoked. The following screen appears

4 Press <CR> to continue.

5 Log into the system and enter the time and date, when prompted.

6 Initiate the database installation by selecting the following command from the menu:

<u> to Install menu

7 Remove the CP Install Program diskette and insert the Keycode diskette, when prompted.

<a> to continue with keycode validation

<y> to confirm that the keycode matches the CD-ROM release

8 When the Install Menu is displayed, select the following options in sequence when you are prompted to do so

<b> to install software, database, CP-BOOT ROM, and IOP-ROM

<a> to verify that the CD-ROM is now in drive

The Installation Status Summary screen appears that lists the options to be installed.

<y> Yes, start Installation

<a> Continue with Upgrade

When the ROM installation screen appears, select the following prompts in sequence:

<a> Continue with ROM Upgrade

The following message appears:

Software Release XXXX was installed successfully. All files were copied from CDROM to the hard disk.

Please press <CR> to when ready...

<a> Continue with ROM upgrade

<a> Yes, start Installation

<a> Continue with ROM upgrade

When the Installation Status Summary screen appears, press <CR> when ready...

When the INSTALL MENU appears:

<d> To install Database only

When the database installation screen appears, insert the first 2 MB database diskettes in the IODU/C.

<a> to install the customer database

<y> to start installation

<a> to continue the database installation

<y> to load the database

<a> to continue with ROM upgrade

<cr> Are you sure you want to continue with IOP ROM

<a> to install the IOP-ROM from hard disk

<y> Yes, start installation

<a> to continue with ROM upgrade

The Installation Status Summary screen appears. Verify that CD to disk, disk to ROM, Database, CP-BOOTROM, and IOP-ROM were installed.

<cr> press return to continue

<q> to quit (remove any diskettes from the floppy drive)

<y> Yes, to confirm quit

<a> to reboot the system

The system will automatically perform a sysload during which several messages will appear on the system terminal. Wait for “DONE” and then “INI” messages to be displayed before continuing.

Check for Peripheral Software Download

1 Load LD 22 and print Target peripheral software version. The Source peripheral software version was printed during the pre-conversion procedure. If there is a difference between the Source and Target peripheral software version, a forced download will occur during initialization when coming out of parallel reload. System initialization will take longer and established calls on IPE will be dropped.

LD 22	
REQ	PRT
TYPE	PSWV

Test call processing

1 Test Call Processing. This includes, but is not limited to the following:

- Check for dial tone.
- Make internal, external, and network calls.
- Check attendant console activity.
- Check DID trunks.
- Check any auxiliary processors.

Complete the upgrade

1 Perform a redundancy sanity test using the following sequence:

LD 135	
STAT CNI	Get status of CNI card
STAT CPU	Get status of CPU and memory

2 Clear the display and minor alarms..

CDSP	Clear the displays on the Cores
CMAJ	Clear major alarms
CMIN ALL	Clear minor alarms
********	exit program

The software conversion is complete.

Adding features

Adding new features and/or modifying Incremental Software Management (ISM) limits requires the installation of a new keycode. Keycodes are delivered via diskette or electronic file transfer and installed using the key management commands in LD 143 or the Meridian 1 Software Installation Tool.

This section describes how to install a keycode to activate features and/or modify ISM limits using the commands listed in Table 13.

Table 13
LD 143 commands

Keycode delivery	Keycode Installation command
Diskette	Use the KNEW_F0 or KNEW_F1 command in LD 143
Electronic file on a PC	Use the KUPL command in LD 143, followed by the KNEW_HD command (see note)
Faxed to the customer site (paper-based keycode)	Use the KMAN command in LD 143, followed by the KNEW_HD command
Note: If the keycode is downloaded from the Keycode Distributor Server (KDS), use the KUPL command to install the keycode. Refer to the “Distributor Keycode Application” section in this document for more information about KDS.	

Using keycode diskettes

With multi-users, access to LD 143 is limited to the system administrator or support personnel. Limited Access Password (LAPW) defines the users to this overlay to limit access to the configured database.

1 Insert the keycode diskette into the floppy drive on the IODU/C card.

2 In LD 143, print the pending keycode contents. Use “KSHO F0” if your keycode is on the diskette in the floppy drive on Core/Net 0, or “KSHO F1” if your keycode is on the diskette in the floppy drive on Core/Net 1:

LD 143	to load the program
KSHO F0 **or** **KSHO F1**	print the contents of the candidate keycode

3 Perform the KDIF command. Use “KDIF F0 REC” if the keycode diskette is inserted in the floppy drive on Core/Net 0, or “KDIF F1 REC” if the keycode is inserted in the floppy drive on Core/Net 1:

KDIF F0 REC or KDIF F1 REC	to print the differences between the candidate and the current keycodes
********	to exit LD 143

4 Perform the KNEW command:

LD 143	to load the program
KNEW HD	to copy the keycode to the other Core/Net
********	to exit the program

5 Reboot the system at a time that will minimize service impact.

The new keycode will not take effect until the system reboots.

Using electronic keycode files

Note: To perform this procedure, a PC running Windows 95® is required.

In this procedure, an electronic keycode file is “copied” from a PC and then “pasted” into the Meridian 1 system using LD 143. The new keycode must reside on the PC prior to performing the following procedures.

1 On the PC, access the Meridian 1 system (via a modem) with a communication application.

2 Shrink the Meridian 1 system window and move it to one side of the screen.

3 Load the Keycode Management Program (LD 143).

LD 143	to load program
KUPL	upload keycode to the target system

4 On the PC, from the Start menu:

- select the Program header,
- select the Main header,
- open the File Manager
- then open the keycode folder.

Note: The entire keycode must be copied. This includes the information header that proceeds the keycode.

5 Move the cursor from the keycode folder to the keycode file.

6 Select the File header and then select Rename to rename the keycode file with an extension (i.e., keycode.txt). This will allow you to associate the file to a text application.

7 Select Association under the File header and associate the file with a text application (i.e., Note pad).

8 Double click the keycode.txt file and it will now open as a text file to view the content.

9 Shrink the window and move it to one side of the screen, adjacent to the Meridian 1 system window.

10 Highlight the keycode file or on the Edit menu “Select All” and then select “Copy” to copy the keycode.

11 In the Meridian 1 system window, “paste” the new keycode into LD 143.

12 Press <CR> in the system window. This will upload the keycode. The new keycode file will be saved onto the Meridian 1 system hard disk.

13 The menu will prompt you to store the new keycode on a floppy diskette. This is an option, you may select to save the keycode by choosing <y>, or if not, select <n>. Complete the step if <y> is selected.

Insert a new floppy diskette or all data will be erased on the diskette currently in the system.

- Remove the backup disk.
- Insert a new floppy diskette (not the backup diskette) for the new keycode.
- Select <y> on the screen menu and press enter. The new keycode will be stored in the floppy diskette
- Remove the keycode diskette and replace it with the database diskette. Label the keycode diskette.

14 If there are no validation errors, use the command.

> **CAUTION**
> The keycode will be enabled at the next sysload if the KNEW command is executed. To provide appropriate site support, it is highly recommended that execution of KNEW be conducted onsite prior to sysload and not conducted remotely.

KNEW HD to validate the new keycode.

The uploaded keycode is validated against the security device. It will reside on the user's hard disk and on a backed up floppy disk.

15 If there are validation errors, repeat steps. If validation is not successful, contact your technical support organization.

16 If successful, exit the overlay and go the next step.

- Exit.

******** to exit the program

17 The new keycode with new capabilities will be activated at the next restart (sysload). To minimize service impact, manually restart the system at an appropriate time to enable new capabilities.

Entering the keycode manually

Before beginning this procedure, you must have a copy of the keycode. The keycode can reside on paper or as an electronic file. To enter the keycode manually, you will type the keycode in LD 143 as 21 lines, 16 characters per line.

1 Log into the system.

2 Load the Keycode Management Program (LD 143).

LD 143	to load program
KMAN	manually enter the keycode to the target system

3 Type keycode file, 21 lines of 16 characters each. Press return to go to the next line.

Note: When entering the keycode, do not enter the header information that proceeds the keycode.

4 Type “end” at line 22 to end the process.

5 Press enter. The new keycode file will be saved on the hard disk.

6 If there are no validation errors, use the command.

KNEW	to validate the new keycode.

The uploaded keycode is validated against the security device. It will reside on the user’s hard disk and can be backed up on a floppy disk.

7 If there are validation errors, repeat steps 2- 6. If validation is not successful, contact your technical support organization. If successful, continue to the next step.

8 The menu will prompt you the option of storing the new keycode on a floppy diskette.

Insert a new floppy diskette or all data will be erased on the diskette currently in the system.

- Remove the backup diskette.
- Insert a new floppy diskette (not the backup diskette) for the keycode.
- Select <y> on the screen menu and press enter. The new keycode will be stored in the floppy diskette
- Remove the keycode diskette and replace it with the database diskette. Label the keycode diskette.
- Exit.

******** to exit the program

9 The new keycode with new capabilities will be activated at the next restart (sysload). To minimize service impact, manually restart the system at an appropriate time to enable new capabilities.

Procedure 8:
Installing new data cartridges and option packages

CAUTION

To avoid damaging equipment from electrostatic discharge, wear a properly connected anti-static wrist strap when working on Meridian 1 equipment.

Note: This procedure does not apply to systems equipped with NT5D61 IODU/C cards.

The QMM42 Data Cartridge contains the system ID number and equipped software options. The software will not load without the correct data cartridge. In options 51C, 61C, 81 and 81C (Commercial Processor systems), the data cartridge is installed on the NT6D63 I/O Processor (IOP) card or NT5D20 IOP/CMDU card.In systems other than the Commercial Processor systems, the data cartridge is installed on the QPC584 Mass Storage Interface (MSI) card, NT9D34 Enhanced Mass Storage Interface (EMSI) card, or QPC742 Floppy Disk Interface (FDI) card.

If desired, a new option package on the same release may be added by installing a new data cartridge and loading floppy disks that contain the new package. The cartridge ID must match the disks installed in the system. A sysload is required to enable new packages.

Note: Be sure to observe anti-static precautions.

Systems equipped with NT6D63 IOP or NT5D20 IOP/CMDU cards

Perform steps 1 through 6 to install a new data cartridge. If you are also adding new software packages, perform steps 1 through 7.

1 Set the ENB/DIS switch on the IOP or IOP/CMDU card to DIS.

2 Unhook the locking devices on the card; pull it out of the card cage.

3 Remove the data cartridge anchor screw and unplug the cartridge from the connectors on the card.

4 Plug the replacement data cartridge into the connectors on the card. Lightly tighten the anchor screw.

5 Reinsert the card and hook the locking devices.

6 Set the ENB/DIS faceplate switch on the IOP or IOP/CMDU card to ENB.

7 If you are adding new software packages, refer to the following procedure to reinstall system software:

- "Installing software and ROMs" on page 253 for systems equipped with NT9D19 or NT5D10 Call Processor cards
- "Installing software and ROMs" on page 279 for systems equipped with NT6D66 Call Processor cards

Note: Following software installation, a sysload is required to enable the new package(s).

Systems equipped with QPC584, NT9D34, and QPC742 cards

Perform steps 1 through 8 to install a new data cartridge. If you are adding new software packages, perform steps 1 through 9. Before you begin, check Tables 14 and 15 to ensure switch settings are correct. Also check that your label matches your **Target** release.

1 Set the ENB/DIS faceplate switch to DIS.

2 Disconnect the cable to the card you are removing.

3 Unhook the locking devices on the card; pull it out of the card cage.

4 Remove the data cartridge anchor screw and unplug from the connectors on the component side of the card.

5 Plug the replacement data cartridge into the connectors on the component side of the card. Slightly tighten the anchor screw.

6 Reinsert the card and hook the locking devices.

7 Reconnect the cable to the card.

8 Set the card ENB/DIS faceplate switch to ENB.

9 If you are adding new software packages, refer to “Procedure 3: Convert from one X11 release to a later release” on page 47 and reinstall system software.

Note: Following software installation, a sysload is required to enable the new package(s).

Table 14
QPC584 MSI and NT9D34 EMSI card switch settings

Options	QPC584 = SW 3 NT9D34 = SW 2							
	1	2	3	4	5	6	7	8
5.25-in. floppy drives only	on	off	off	off	off	off	off	off
5.25-in. floppy drives and 5.25-in. hard drive	on	off	off	on	off	off*	off	off
3.5-in. floppy drives only	on	off	off	off	on	off	**	***
3.5-in. floppy drives and 3.5-in. hard drive	on	off	off	on	on	off	**	***

Note: QPC584 vintage E or later is required for 3.5-in. drives. Vintage F4, K, or later is required for the three-disk configuration. Vintage L or later is required for X11 release 18.

* When a QMM38 MSU is replaced, set switch 6 to ON before the faulty QMM38 is powered down, so the disk head will retract (shipping mode). After the replacement MSU is installed, set switch 6 to OFF.

** For 4 MB (ED) disks set to ON.
For 2 MB (HD) disks set to OFF.

*** For STE, or 21E, set to ON *when* the NTND01 Integrated CPU/Memory (ICM) Card is installed.
For all other systems, set to OFF.

Table 15
QPC742 Floppy Disk Interface (FDI)

Options	SW 1							
	1	2	3	4	5	6	7	8
5.25-in. floppy drives	on	off	off	off	off	off	off	off
3.5-in. floppy drives	on	off	off	off	on	off	*	**

Note: Vintage D or later is required for 3.5-in. drives. Vintage F or later is required for X11 release 18.

* For 4 MB (ED) disks set to ON.
For 2 MB (HD) disks set to OFF.

** For STE, or 21E, set to ON *when* the NTND01 Integrated CPU/Memory (ICM) Card is installed.
For all other systems, set to OFF.

Procedure 9:
Install a new Read Only Memory card

In the option 51C, 61C, 81 and 81C systems, ROM capability is provided by the CP card. In previous systems the Read Only Memory (ROM) card is attached to the component side of the CPU, CPU Function, or the CM card. This procedure applies only to the previous system cards. See the list below for the cards pertaining to your system.

> ***Note:*** X11 release 21 is the last release that supports system options prior to options 51C, 61C, 81 and 81C.

— X11 release 17 and earlier

- ST/21 QPC687 CPU card
- NT/RT/XT 51/61/71 QPC579 CPU Function (FN) card

— X11 release 18 and later

- STE/21E NTND01 ICM card
- NT/RT/XT 51/61/71 QPC579 CPU Function (FN) card

— X11 release 21

- STE/21E
- NT/RT/XT 51/61/71 QPC579 CPU Function (FN) card

Tables 16 and 17, on the following pages, list the ROM cards required for each system and for each X11 release.

Be sure to observe antistatic precautions.

Table 16
ROM requirements by system type and X11 release for ST, STE, NT, RT, and XT systems

X11 release	System type			
	ST	STE	NT/RT	XT
7	QPC717B	N/A	QPC602	QPC602
8	QPC717B	N/A	QPC602	QPC602
9	QPC717B	N/A	QPC602	QPC602
10	QPC717B	N/A	QPC602	QPC602
12	QPC717D	N/A	QPC602	QPC602
13	QPC717D	N/A	QPC602	QPC602
14	QPC717D or QPC937	N/A	QPC602	QPC602
15	QPC940	N/A	QPC939	QPC939
16	QPC940	N/A	QPC939	QPC939
17	QPC940	N/A	QPC939	QPC939
18	N/A	NTND31	NTND08	NTND08
19	N/A	NTND31	NTND08	NTND08
20	N/A	NTND31	NTND08	NTND08
21 see note 1	N/A	NTND31	NTND08	NTND08

Note: ST systems are not supported with X11 release 18 and later. You must upgrade to the ST Enhanced (STE).

Note 1: X11 release 21 is the highest supported software release for all of these system types.

Table 17
ROM requirements by system type and X11 release for 21, 21E, 51, 61, 71 and 81 systems

X11 rls	System type				
	21	**21E**	**51 see note 1**	**61 see note 1**	**71 see note 1**
7 to 14	N/A	N/A	N/A	N/A	N/A
15	QPC940	N/A	QPC939	QPC939	QPC939
16	QPC940	N/A	QPC939	QPC939	QPC939
17	QPC940	N/A	QPC939	QPC939	QPC939
18	see note 2	NTND31	NTND08	NTND08	NTND08
19	N/A	NTND31	NTND08	NTND08	NTND08
20	N/A	NTND31	NTND08	NTND08	NTND08
21	N/A	NTND31	NTNT08	NTND08	NTND08

Note 1: System options, 51, 61, and 71 are available for X11 release 15 through release 21.

Note 2: System option 21 is not supported with X11 release 18 and later. You must upgrade to 21 Enhanced (21E).

Replace ROM card on single CPU systems

> **CAUTION**
> Call processing will stop when you remove the ICM, CPU, or CPU FN card.

1 To replace the ROM card, you must remove the card.

- If the SDI port is configured on the QPC687 card, software-disable it, and disconnect the cable to the SDI port.

2 Unhook the locking devices on the card. Pull it out of the card cage.

3 Gently unplug the ROM card from the connectors on the component side of the card.

> **CAUTION**
> When you remove the ROM card, do not touch other components on the card.

4 Plug the replacement ROM card into the connectors on the component side of the card.

- For the NTND31 ROM, install the screw and washer at each corner.

5 Reinsert the card and hook the locking devices.

6 Set the ENB/DIS switch to ENB on the card.

7 A system reload is required. Press the RLD button.

Replace ROM card on dual CPU systems

CAUTION
This procedure must take place on the inactive CPU.

1. Disable the Function card by setting the associated QPC580 CPU Interface (IF) card ENB/DIS faceplate switch. Disconnect the cable between the Function and Interface cards in the inactive CPU.
2. Unhook the locking devices on the QPC579 Function card; pull it out of the card cage.
3. Gently unplug the ROM card from the connectors on the component side of the Function card.

CAUTION
When you remove the ROM card, do not touch other components on the Function card.

4. Plug the replacement ROM card into the connectors on the component side of the QPC579 Function card.
5. Reinsert the QPC579 Function card and hook the locking devices. Enable the Function card by setting the QPC580 Interface card ENB/DIS faceplate switch to ENB.
6. Connect the cable between the Function and Interface cards.

Procedure 10:
Increasing memory

X11 release 24

To install X11 release 24, your system must be operating with the required CP card memory. If your system is not operating with the minimum memory requirement, the CP card(s) memory must be upgraded before installing release 24 software.

Release 24 supports NT9D19 (68040), NT5D10 (68060), and NT5D03 (68060E) Call Processor cards. The minimum memory requirement for each system option is listed in Table 18.

Table 18
Release 24 call processor memory requirements

System type	Minimum memory requirement	Call processor card
option 51C	48 MB	NT9D19 (68040), NT5D10 (68060), or NT5D03 (68060E)
option 61C	64 MB	NT9D19 (68040), NT5D10 (68060), or NT5D03 (68060E)
option 81 and 81C	80 MB	NT9D19 (68040)*, NT5D10 (68060) or NT5D03 (68060E)
Note: * The 96 MB NT9D19 (68040) CP card is not supported on option 81/81C systems running release 24. Option 81/81C systems with 96 MB NT9D19 CP cards must perform a memory upgrade or card replacement.		

A CP card memory upgrade consists of:

- installing 16 MB DRAM SIMMs on the existing CP card board

  or

- installing a new, complete CP card

The supported memory upgrades for each Meridian 1 release 24 Call Processor card are listed in Tables 19, 20 and 21.

Table 19
68040 NT9D19 CP card memory upgrades

Existing Call Processor card	Supported memory upgrade	Upgrade method
48 MB NT9D19AA/AB	48 to 64 MB	Install one 16 MB DRAM SIMM on each existing CP card. See page 182.
64 MB NT9D19CA/CB	64 to 80 MB	Install one 16 MB DRAM SIMM on each existing CP card. See page 182.
80 MB NT9D19EA/EB	80 to 96 MB	Replace the NT9D19CA/CB CP card with a new NT9D19EA/EB CP card. See page 196 (IODU/C) or page 201 (IOP/CMDU).
96 MB NT9D19HA/HB	96 to 112 MB	Install one 16 MB DRAM SIMM on each existing CP card. See page 182.

Table 20
68060 NT5D10 CP card memory upgrades

Existing Call Processor card	Supported memory upgrade	Upgrade method
48 MB NT5D10AA	48 to 64 MB	Install one 16 MB DRAM SIMM on each existing CP card. See page 182.
64 MB NT5D10CA	64 to 80 MB	Install one 16 MB DRAM SIMM on each existing CP card. See page 182.
80 MB NT5D10DA	80 to 96 MB	Replace the NT5D10CA CP card with a new NT5D10DA CP card. See page 196 (IODU/C) or page 201 (IOP/CMDU).
96 MB NT5D10HA	96 to 112 MB	Install one 16 MB DRAM SIMM on each existing CP card. See page 182.

Table 21
68060E NT5D03 CP card memory upgrades

Existing Call Processor card	Supported memory upgrade	Upgrade method
48 MB NT5D03AA	48 to 64 MB	Install one 16 MB DRAM SIMM on each existing CP card. See page 182.
64 MB NT5D03BA	64 to 80 MB	Install one 16 MB DRAM SIMM on each existing CP card. See page 182.
80 MB NT5D03CA	80 to 96 MB	Replace the NT5D03BA CP card with a new NT5D03CA CP card. See page 196 (IODU/C) or page 201 (IOP/CMDU).
80 MB NT5D03DA	96 to 112 MB	Install one 16 MB DRAM SIMM on each existing CP card. See page 182.
112 MB NT5D03EA	112 to 128 MB	Install one 16 MB DRAM SIMM on each existing CP card. See page 182.

X11 release 23

To install X11 release 23, your system must be operating with the required CP card memory. If your system is not operating with the minimum memory requirement, the CP card(s) memory must be upgraded before installing release 23 software.

Release 23 supports NT6D66 (68030), NT9D19 (68040), and NT5D10 (68060) Call Processor cards, and release 23.5x introduces the NT5D03 (68060E) Call Processor card. The minimum memory requirement for each system option is listed in Table 22.

Table 22
Release 23 call processor memory requirements

System type	Minimum memory requirement	Call processor card
option 51C and 61C	48 MB	NT6D66 (68030), NT9D19 (68040) or NT5D10 (68060)
option 81 and 81C	48 MB 64 MB	NT6D66 (68030 NT9D19 (68040), NT5D10 (68060) or NT5D03 (68060E)

A CP card memory upgrade consists of:

- installing 16 MB DRAM SIMMs on the existing CP card board

  or

- installing a new, complete CP card

The supported memory upgrades for each release 23 Meridian 1 Call Processor card are listed in Tables 23 through 26.

Table 23
68030 NT6D66 CP card memory upgrades

Existing Call Processor card	Supported memory upgrade	Upgrade method
24 MB NT6D66AA/DA	24 MB to 48 MB	Remove two 4 MB DRAM, and install two 16 MB DRAM SIMM on each existing CP card. See page 211.
24 MB NT6D66AB/DB	24 MB to 48 MB	Remove one 8 MB DRAM, and install two 16 MB DRAM SIMM on each existing CP card. See page 211.
Note: The NT6D66DA 48 MB CP card is not available for new system sales or system upgrades. ***Note:*** Refer to “Increasing memory on NT6D66 CP cards” on page 210 for memory upgrade procedures.		

Table 24
68040 NT9D19 CP card memory upgrades

Existing Call Processor card	Supported memory upgrade	Upgrade method
48 MB NT9D19AA/AB	48 to 64 MB	Install one 16 MB DRAM SIMM on each existing CP card. See page 182.
64 MB NT9D19CA/CB	64 to 80 MB	Install one 16 MB DRAM SIMM on each existing CP card. See page 182.
80 MB NT9D19EA/EB	80 to 96 MB	Replace the NT9D19CA/CB CP card with a new NT9D19EA/EB CP card. See page 196 (IODU/C) or page 201 (IOP/CMDU).
96 MB NT9D19HA/HB	96 to 112 MB	Install one 16 MB DRAM SIMM on each existing CP card. See page 182.

Table 25
68060 NT5D10 CP card memory upgrades

Existing Call Processor card	Supported memory upgrade	Upgrade method
48 MB NT5D10AA	48 to 64 MB	Install one 16 MB DRAM SIMM on each existing CP card. See page 182.
64 MB NT5D10CA	64 to 80 MB	Install one 16 MB DRAM SIMM on each existing CP card. See page 182.
80 MB NT5D10DA	80 to 96 MB	Replace the NT5D10CA CP card with a new NT5D10DA CP card. See page 196 (IODU/C) or page 201 (IOP/CMDU).
96 MB NT5D10HA	96 to 112 MB	Install one 16 MB DRAM SIMM on each existing CP card. See page 182.

Table 26
68060 NT5D03 CP card memory upgrades

Existing Call Processor card	Supported memory upgrade	Upgrade method
48 MB NT5D03AA	48 to 64 MB	Install one 16 MB DRAM SIMM on each existing CP card. See page 182.
64 MB NT5D03BA	64 to 80 MB	Install one 16 MB DRAM SIMM on each existing CP card. See page 182.
80 MB NT5D03CA	80 to 96 MB	Replace the NT5D03BA CP card with a new NT5D03CA CP card. See page 196 (IODU/C) or page 201 (IOP/CMDU).
80 MB NT5D03DA	96 to 112 MB	Install one 16 MB DRAM SIMM on each existing CP card. See page 182.

X11 release 22

To install X11 release 22, your system must be operating with the required CP card memory.

For systems equipped with NT9D19 CP cards, the minimum memory requirement is:

- options 51C and 61C: 48 MB
- options 81 and 81C: 64 MB

Note: In market regions where the NT9D19 64 MB CP card is not available, options 81 and 81C require NT9D19 96 MB CP cards to run X11 release 22.

For systems equipped with NT6D66 CP cards, the minimum memory requirement is 48 MB for all system options.

If your system is not operating with the minimum memory requirement, the CP card(s) memory must be upgraded before installing release 22 software. For memory upgrade procedures, refer to “Increasing memory on NT9D19, NT5D10 CP and NT5D03 CP cards” on page 180 or “Increasing memory on NT6D66 CP cards” on page 210.

X11 release 21

To run release 21, options 81 and 81C must have 48 MB NT6D66DA/DB CP cards installed. If your system has 24 MB CP cards, they must be upgraded to 48 MB before installing release 21 software.

If you are upgrading 24MB CP cards by adding memory SIMMs, follow the procedure "Upgrading existing NT6D66AA/AB CP cards to 48 MB" on page 211. If you are replacing CP cards with new 48MB CP cards, follow the procedure "Replacing 24 MB CP cards with new 48 MB CP cards" on page 232.

X11 releases 18 through 20

X11 release 18 requires significant hardware changes for all systems. These hardware changes must be made during the conversion process. Refer to "Procedure 6: Performing a parallel reload" on page 101 for the conversion and upgrade details. The hardware requirements for NT, RT, XT, 61, and 71 for X11 release 18 and later are listed below.

— NTND08 ROM

— NTND09Bx 6-MB Memory Card
NTND09Cx 12-MB memory Card

— NTND10 CMA

— QPC584L Mass Storage Interface (MSI) or
NT9D34 Enhanced Mass Storage Interface (EMSI)

— NTND16 Multi Disk Unit (MDU)

— QPC742F Floppy Disk Interface (FDI)

— NTND15 Floppy Disk Unit (FDU)

Note 1: The FDI and FDU, or the MSI/EMSI and MDU are optional for RT systems. NT, XT, 51, 61, and 71 systems require the MSI and MDU.

Note 2: If you are replacing an NTND09Bx 6-MB card with the NTND09Cx 12-MB memory card, use "Procedure 6: Performing a parallel reload" on page 101 to enter parallel mode *before* changing the card. You **must** sysload for the changes to take affect. Refer to *Meridian 1 hardware replacement* (553-3001-520) for complete instructions.

Note 3: Do not mix NTND09 memory cards with QPC583 memory cards.

Note 4: NTND10 CMA cards are backward compatible with QPC583 memory cards and QPC581 CMA cards. Set pins 2 and 3 on jumper J3 to support backward compatibility.

The ST and 21 must be upgraded to ST Enhanced (STE) or 21 Enhanced (21E) machines to support X11 release 18. Refer to *Upgrade system installation* (553-3001-250) for the STE and 21E upgrade procedures. The following hardware is required.

— NTND01 Integrated CPU and Memory (ICM)

— NTND02 Miscellaneous SDI Peripheral Signaling (MSPS)

— NTND31 ROM

— NTND15 Floppy Disk Unit (FDU) or
NT9D33 Small System Multi Disk Unit (SMDU)

— QPC742F Floppy Disk Interface (FDI) or
NT9D34 Enhanced Mass Storage Interface (EMSI) card

X11 release 17 and earlier

CAUTION

To avoid damaging equipment from electrostatic discharge, wear a properly connected anti-static wrist strap when working on Meridian 1 equipment.

With X11 release 17 and earlier, if you find that you need to increase the memory in your system, perform the following procedure.

With X11 release 12 through 14, an ST memory upgrade is supported. The only other systems supporting memory upgrades with X11 release 17 or earlier are XT and 71 systems.

CAUTION
Perform this procedure from your **Source** media, prior to conversion.

1 Load LD 17 to perform a change.

LD 17		
REQ	CHG	Change system data.
CEQU	YES	Change Common Equipment parameters.
MTYP	xxx	Enter the new memory type.

See *X11 input/output guide* (553-3001-400) for a complete explanation of these prompts and allowed responses.

2 Perform a data dump to your **Source** media.

Install required memory boards and invoke system reload. Additional system memory is now provisioned and active.

3 You are now ready to perform your conversion, or parallel reload.

Increasing memory on NT9D19, NT5D10 CP and NT5D03 CP cards

Use the following procedures to increase the on-board CP card memory on the NT9D19, NT5D10 or NT5D03 CP cards.

Memory upgrades consist of installing memory SIMMs on your existing NT9D19 or NT5D10 or NT5D03 CP card, or installing new, complete CP card(s) depending on memory requirements. Refer to Table 27 on page 181 for a listing of the supported CP card memory upgrades.

Several system upgrades to option 51C, 61C, 81, and 81C include procedures to upgrade CP card memory. If you are upgrading to one of these systems, do not use the procedures in this document; instead, locate the upgrade procedure that applies to your system (see *Upgrade system installation to X11 release 24* (553-3001-258) and use the memory upgrade procedure contained therein.

CAUTION

Northern Telecom recommends that only properly trained distributor personnel perform this memory SIMM upgrade. Upgrade memory on NT9D19, NT5D10, or NT5D03 CP cards involves some risk of damage to SIMMs and CP cards; personnel performing this upgrade do so at their own risk. Personnel should have spare CP cards on hand or risk installation delay or system down time. Northern Telecom assumes no responsibility for any damage incurred, installation delays due to board damage, or loss due to damage or system down time.

Table 27
Supported CP card memory upgrades

Existing Call Processor card	Supported memory upgrade	Upgrade method
48 MB NT9D19AA/AB	48 to 64 MB	Install one 16 MB DRAM SIMM on each existing CP card. See page 182.
64 MB NT9D19CA/CB	64 to 80 MB	Install one 16 MB DRAM SIMM on each existing CP card. See page 182.
80 MB NT9D19EA/EB	80 to 96 MB	Replace the NT9D19CA/CB CP card with a new NT9D19EA/EB CP card. See page 196 (IODU/C) or page 201 (IOP/CMDU).
96 MB NT9D19HA/HB	96 to 112 MB	Install one 16 MB DRAM SIMM on each existing CP card. See page 182.
48 MB NT5D10AA	48 to 64 MB	Install one 16 MB DRAM SIMM on each existing CP card. See page 182.
64 MB NT5D10CA	64 to 80 MB	Install one 16 MB DRAM SIMM on each existing CP card. See page 182.
80 MB NT5D10DA	80 to 96 MB	Replace the NT5D10CA CP card with a new NT5D10DA CP card. See page 196 (IODU/C) or page 201 (IOP/CMDU).
96 MB NT5D10HA	96 to 112 MB	Install one 16 MB DRAM SIMM on each existing CP card. See page 182.
48 MB NT5D03AA	48 to 64 MB	Install one 16 MB DRAM SIMM on each existing CP card. See page 182.
64 MB NT5D03BA	64 to 80 MB	Install one 16 MB DRAM SIMM on each existing CP card. See page 182.
80 MB NT5D03CA	80 to 96 MB	Replace the NT5D03BA CP card with a new NT5D03CA CP card. See page 196 (IODU/C) or page 201 (IOP/CMDU).

Table 27
Supported CP card memory upgrades (Continued)

Existing Call Processor card	Supported memory upgrade	Upgrade method
80 MB NT5D03DA	96 to 112 MB	Install one 16 MB DRAM SIMM on each existing CP card. See page 182.
112 MB NT5D03EA	112 to 128 MB	Install one 16 MB DRAM SIMM on each existing CP card. See page 182.
Note: NT9D19 CP cards are supported with X11 release 22 and later. NT5D10 CP cards are supported with X11 release 23. NT5D03 CP cards are supported from X11 release 23.5.		

Installing memory SIMMs on NT9D19, NT5D10 or NT5D03 CP cards

These procedures describe how to increase the CP card memory by installing memory SIMMS on the following NT9D19, NT5D10 and NT5D03 CP card(s):

- NT9D19 48 MB to 64 MB
- NT9D19 64 MB to 80 MB
- NT5D10 48 MB to 64 MB
- NT5D10 64 MB to 80 MB
- NT5D03 48 MB to 64 MB
- NT5D03 64 MB to 80 MB

Note: This procedure **cannot** be used to upgrade an NT9D19 64 MB CP card to 96 MB, an NT5D10 80 MB CP card to 112 MB, or an NT5D03 80 MB CP card to 128 MB. Those memory upgrades consist of installing new, complete CP cards (see “Installing new NT9D19, NT5D10 or NT5D03 CP cards” on page 201).

Memory SIMM precautions

Upgrading a CP card consists of the installation of new SIMM(s). If you are installing memory SIMMs on the CP cards, view the video tape “CP Card SIMMs Installation Video” included in the upgrade package before attempting this upgrade.

CAUTION

Memory SIMMs are static-sensitive semiconductor devices which require that you take some electrostatic discharge (ESD) precautions. An ESD-safe work station is recommended on which the CP card can be placed. The minimum requirement is a properly-grounded ESD ground strap worn by the upgrade personnel at all times.

1 Find and test an appropriate ground point for the antistatic mat, as described in the video tape provided.

2 Attach the antistatic mat ground wire to the ground point.

3 Place ESD wrist strap on your wrist and connect the wrist strap ground wire to the antistatic mat.

Upgrade preparation

Before proceeding with the upgrade procedure, make a backup copy of the customer database using the data dump routine:

1 Log into the system.

2 Load the Equipment Data Dump Program (LD 43). At the prompt, enter

LD 43	to load the program

3 When “EDD000” appears on the terminal, enter

EDD	to begin the data dump

4 When “DATABASE BACKUP COMPLETE” or “DATADUMP COMPLETE” appears on the terminal, enter

********	to exit the program

CAUTION

If the data dump is not successful, do not continue; contact your technical support organization. A data dump problem must be corrected before proceeding.

5 Check the total memory allocation before the upgrade.

LD 10	to load the program

When the header for overlay 10 is displayed, note the value associated with Total Memory. Compare the Total Memory before and after the upgrade. Total Memory should be greater after the upgrade.

Exit the program:

********	to exit the program

Splitting the cores

Note: This section is not applicable for option 51C systems. Skip to "Upgrading the CP card memory" on page 186 to continue with the upgrade.

1 Verify that the disk drives are synchronized:

LD 137	to load the program
STAT	to get the status of the disk drives

If the disks are synchronized, proceed with step 2. If they are not synchronized, execute the SYNC command:

SYNC	to synchronize the drives
********	to exit the program

2 Verify that CPU 0 is the active CPU:

LD 135	to load the program
STAT CPU	to check CPU status

If CPU 0 is active, proceed with step 3. If CPU 0 is not the active CPU, swap CPUs and verify again:

SCPU	to swap CPUs
STAT CPU	to check CPU status

3 Set the MAINT/NORM switch on the NT9D19, NT5D10 or NT5D03 CP card in Core 0 to MAINT.

4 Set the ENB/DIS switch on all CNI cards in Core 1 to DIS.

5 Perform the following three steps in uninterrupted sequence:

- press and hold the MAN RST button on the CP card in Core 1
- set the MAINT/NORM switch on the CP card in Core 1 to MAINT
- release the MAN RST button

The system is now operating in split mode, with call processing on Core 0.

Upgrading the CP card memory

1 Connect a terminal to the CPSI port in Core 1 to J25 of the I/O panel at the back of the core. Be sure it is configured as follows. The recommended baud rate is 9600, to be the same as the CPSI port.

- 7 data bits
- 1 stop bit
- Space parity
- Full duplex
- XON protocol

2 Press the MAN RST button on the NT9D19, NT5D10 or NT5D03 CP card in Core 1, immediately disengage the lock latches and remove the card.

3 Place the CP card SIMM-side up on the antistatic mat.

4 Locate the DRAM (Dynamic Random Access Memory) SIMM (Single Inline Memory Module) connectors (see Figure 1 on page 187).

Figure 1
SIMM Identification on NT9D19 CP, NT5D10 CP or NT5D03 CP card

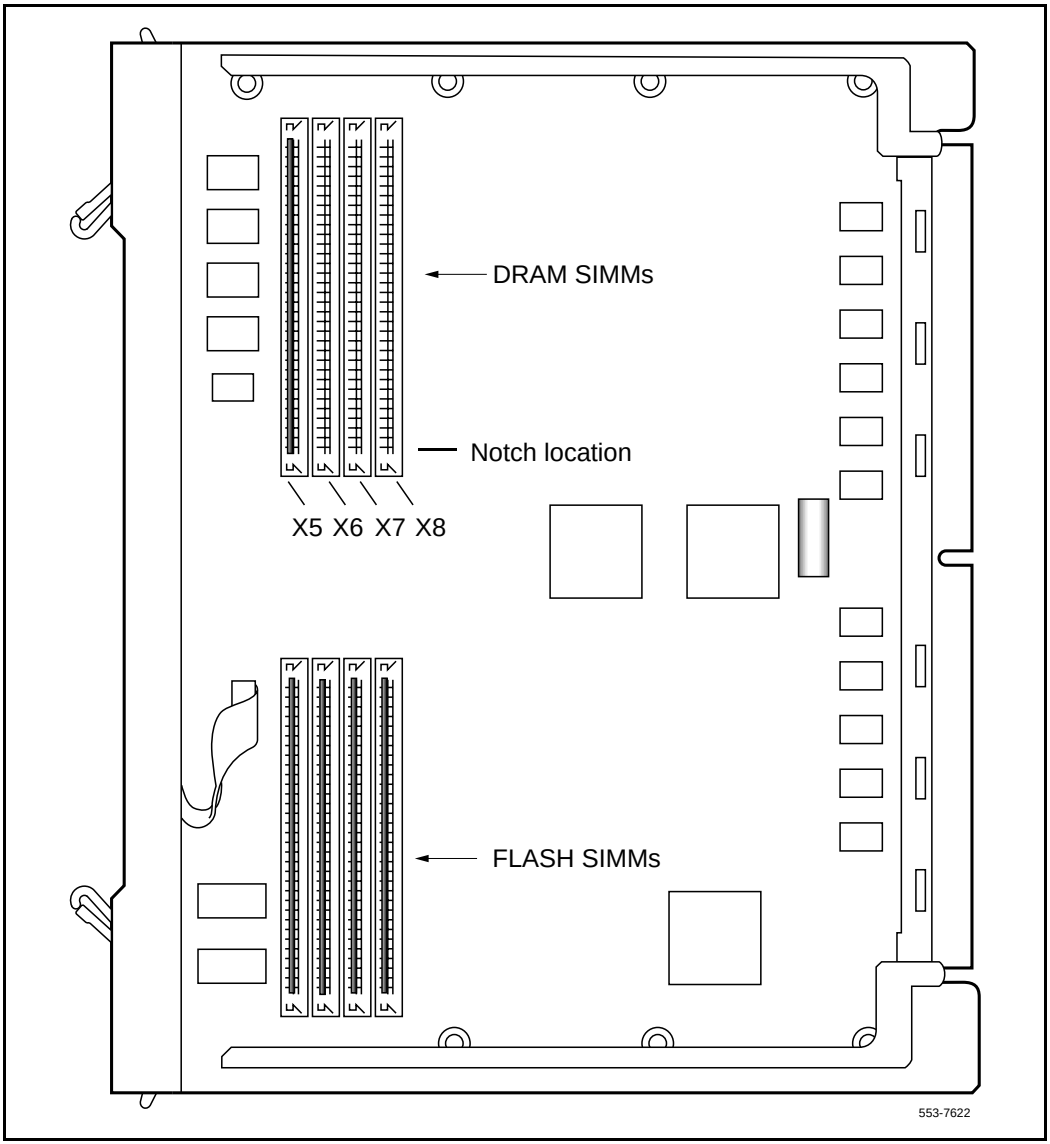

Figure 2
SIMM Installation on NT9D19, NT5D10 or NT5D03 CP card

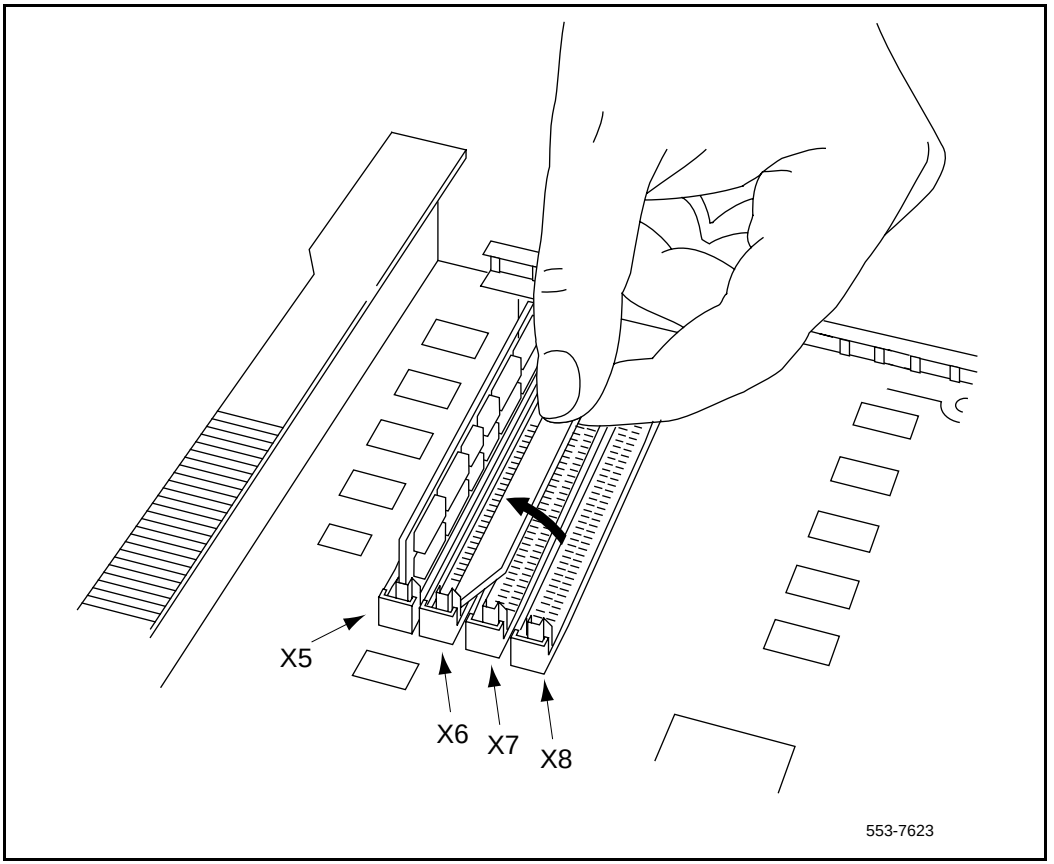

5 Install a new 16 MB SIMM in the SIMM connector designated X6, for the 48 MB to 64 MB upgrade; install a new 16 MB SIMM in the SIMM designated X7 for the 64 MB to 80 MB upgrade:

- Orient the new SIMM so that the notch at one end of the SIMM aligns with the key at one end of the SIMM socket (see Figure 2 on page 188).
- Hold the SIMM approximately at a 50- to 70-degree angle and gently insert the SIMM into the socket (see Figure 2 on page 188).
- Using your thumbs and index fingers only (at the upper corners of the SIMM), carefully lean the SIMM toward the others until it is upright and the latch at each end of the SIMM snaps into place. If necessary, use the non-conductive screw driver to assist you in opening each latch while you move the SIMM into the upright position.

CAUTION

Do not force the SIMM into the socket. Any damage caused to the socket will require replacement of the entire NT9D19, NT5D10 **or** NT5D03 CP CP card.

6 Verify that the MAINT/NORM switch on the newly upgraded CP card is set to MAINT.

7 Insert the CP card in Core 1 in the same slot and secure the lock latches. The system will automatically perform a sysload during which several messages will appear on the system terminal.

8 Verify that the “DONE” message appears on the system terminal.

Note: The SYSTEM INI message may take 70 seconds or more to appear.

9 After the system initializes, log into the system.

10 Set the date and time:

LD 2	to load the overlay
STAD	DD MM YY HR MN SC

11 Load the Equipment Data Dump Program (LD 43). At the prompt, enter

LD 43	to load the program

12 When “EDD000” appears on the terminal, enter

EDD	to begin the data dump

13 When “DATABASE BACKUP COMPLETE” and “DATADUMP COMPLETE” appears on the terminal, enter

********	to exit the program

CAUTION

If the data dump is not successful, do not continue; contact your technical support organization. A data dump problem must be corrected before proceeding.

14 For options 61C, 81, and 81C, continue with step 17. For option 51C systems, skip to “Completing the upgrade for option 51C” on page 194.

15 Set the ENB/DIS switch on the IOP or IOP/CMDU card to DIS in Core 0.

16 Set the ENB/DIS switches on all CNI cards in Core 0 to DIS.

17 Set the ENB/DIS switches on all CNI cards in Core 1 to ENB.

CAUTION

Disabling CNI cards in Core 0 will momentarily interrupt call processing. Calls established or in process will be dropped. Call processing will resume after the “SYSTEM INI” messages appear on the system terminal (approximately 1 minute).

18 Press the MAN INT button on the CP Card in Core 1.

After the system initialization has finished (INI messages are no longer displayed on the system terminal), check for dial tone on a telephone set. If dial tone is present, upgrade Core 0.

Upgrading the CP card memory in Core 0

1 Connect a terminal to the CPSI port in Core 1 to J25 of the I/O panel at the back of the core. Be sure it is configured as follows. The recommended baud rate is 9600, to be the same as the CPSI port.

- 7 data bits
- 1 stop bit
- Space parity
- Full duplex
- XON protocol

2 Press the MAN RST button on the NT9D19, NT5D10 or NT5D03 CP card in Core 0 and then immediately disengage the lock latches and remove the card.

3 Place the CP card SIMM-side up on the antistatic mat.

4 Locate the DRAM SIMM connectors (see Figure 1 on page 187).

5 Install a new 16 MB SIMM in the SIMM connector designated X6, for the 48 MB to 64 MB upgrade; install a new 16 MB SIMM in the SIMM designated X7 for the 64 MB to 80 MB upgrade:

- Orient the new SIMM so that the notch at one end of the SIMM aligns with the key at one end of the SIMM socket (see Figure 2 on page 188).
- Hold the SIMM approximately at a 50- to 70-degree angle and gently insert the SIMM into the socket (see on page 188).
- Using your thumbs and index fingers only (at the upper corners of the SIMM), carefully lean the SIMM toward the others until it upright and the latch at each end of the SIMM snaps into place. If necessary, use the non-conductive screw driver to assist you in opening each latch while you move the SIMM into the upright position.

CAUTION

Do not force the SIMM into the socket. Any damage caused to the socket will require replacement of the NT9D19, NT5D10 or NT5D03 CP card.

- Using your thumbs and index fingers only (at the upper corners of the SIMM), carefully lean the SIMM toward the others until it is upright and the latch at each end of the SIMM snaps into place. If necessary, use the non-conductive screw driver to assist you in opening each latch while you move the SIMM into the upright position.

6 Insert the CP card in the same slot in Core 0 and secure the lock latches.

The system will automatically perform a sysload during which several messages will appear on the system terminal.

7 Perform the following three steps in rapid succession:

- Press and hold the MAN RST button
- Set the MAINT/NORM switch on the CP card in Core 0 to NORM
- Release the MAN RST button

An “HW1534” message from the CPSI (Core 1) or SDI port indicates the start of memory synchronization. Within 10 minutes, an “HWI533” message from the CPSI (Core 1) or SDI port indicates that the contents of Core 0 memory is copied to Core 1 memory. Wait until the memory synchronization is complete before continuing.

8 Set the ENB/DIS switches on all CNI cards in Core 0 to ENB.

9 Set the MAINT/NORM switch on the CP card in Core 1 to NORM.

Completing the upgrade for options 61C, 81, and 81C

1 Check total memory allocation after the upgrade.

LD 10	to load the program

When the header for overlay 10 is displayed, note the value associated with Total Memory. Compare Total Memory before and after the upgrade. Total Memory should be greater after the upgrade.

Exit the program:

********	to exit the program

2 Verify CPU redundancy and CNI function:

LD 135	to load the overlay
STAT CPU	to check the status of CPU 0
STAT CNI	to verify function of CNIs in Core 0
TEST CPU	to test CPU 0
SCPU	switch to CPU 0
STAT CPU	to check the status of CPU 1
STAT CNI	to verify function of CNIs in Core 1
TEST CPU	to test CPU 1
SCPU	switch to CPU 1
********	to exit the program

3 Synchronize the disk drives:

LD 137	to load the overlay
SYNC	to synchronize the disk drives
********	to exit the program

4 Apply the new labels to the upgraded card, making sure to use the correct label for the card you are upgrading.

5 Apply the new bar code label next to the existing bar code label at the top of the faceplate; do not cover the existing label with the new one. Discard all unused labels.

The CP card memory upgrade for options 61C, 81, or 81C is complete.

Completing the upgrade for option 51C

1 Check total memory allocation after the upgrade.

LD 10	to load the program

When the header for overlay 10 is displayed, note the value associated with Total Memory. Compare Total Memory before and after the upgrade. Total Memory should be greater after the upgrade.

Exit the program:

********	to exit the program

2 Verify CPU and CNI functionality:

LD 135	to load the overlay
STAT CPU	to check the status of CPU 0
STAT CNI	to verify function of CNIs in Core 0
********	to exit the program

3 Apply the new labels to the upgraded card, making sure to use the correct label for the card you are upgrading.

4 Apply the new bar code label next to the existing bar code label at the top of the faceplate; do not cover the existing label with the new one. Discard all unused labels.

The CP card memory upgrade for option 51C is complete.

Installing new NT9D19, NT5D10 or NT5D03 CP cards on systems with IODU/C

Note: Use this procedure if your system is equipped with the IODU/C card (see page 196 if your system is equipped with IOP/CMDU or separate IOP and CMDU cards).

The following procedures describe how to increase the CP card memory by installing a new CP card with higher memory capacity. It can be used to replace and upgrade the following CP cards:

- **80 MB** NT9D19EA card with a new **96 MB** NT9D19CA card
- **80 MB** NT5D10CA card with a new **112 MB** NT5D10DA card
- **80 MB** NT5D03DA card with a new **128 MB** NT5D03EA card

Before starting the procedure, make a backup copy of the customer database using the data dump routine:

1 Log into the system.

2 Load the Equipment Data Dump Program (LD 43). At the prompt, enter

LD 43	to load the program

3 When “EDD000” appears on the terminal, enter

EDD	to begin the data dump

4 When “DATABASE BACKUP COMPLETE” or “DATADUMP COMPLETE” appears on the terminal, enter

********	to exit the program

CAUTION

If the data dump is not successful, do not continue; contact your technical support organization. A data dump problem must be corrected before proceeding.

5 Check total memory allocation before the upgrade.

LD 10	to load the program

When the header for overlay 10 is displayed, note the value associated with Total Memory. After the upgrade, compare Total Memory before and after the upgrade. Total Memory should be greater after the upgrade.

Exit the program:

********	to exit the program

Split the cores

1 To access the Core during the replacement procedure, connect a terminal to the system. The CP card you are replacing must be in the inactive Core. Check the status of the NT5D10 or NT5D03 Call Processor card:

LD 135

STAT CPU	determine which CP card is active

If necessary, switch Cores:

SCPU	switch Cores
********	exit LD 135

2 Set the NORM/MAINT switch on the NT5D10 or NT5D03 Call Processor card to MAINT on the *active* Core.

3 Set the ENB/DIS switch on all CNI cards on the *inactive* Core to DIS.

4 Perform the following three steps on the *inactive* Core in an uninterrupted sequence:

- Press and hold down the MAN RST button on the CP card on the inactive Core.
- Set the NORM/MAINT switch to MAINT.
- Release the MAN RST button.

The system is now in split mode where each Core is functioning independently and the automatic switchover has been disabled.

Installing equipment

1 Set the NORM/MAINT switch to MAINT on the replacement card.

2 Insert the CP Install Program diskette which corresponds with the NT5D10 or NT5D03 Call Processor (68060 or 68060E).

3 Remove the current CP card and put it in a static bag and box.

4 Insert the CP replacement card into its vacated slot and hook the locking devices.

5 Press the MAN RST button on the replacement CP card.

6 When the NT Logo Screen appears on the terminal, press <CR>.

7 Press <CR> to continue.

8 Log into the system and enter the time and date, when prompted.

9 Initiate the database installation by selecting the following command from the menu:

<u>	to Install menu

10 Remove the CP Install Program diskette and insert the Keycode diskette, when prompted.

<a>	to continue with keycode validation
<y>	to confirm that the keycode matches the CD-ROM release

11 When the Install Menu appears, select the following options in sequence:

<g>	to reinstall CP software
<y>	to start installation
<a>	to continue ROM upgrade
<cr>	to return to the Install Menu

12 When the Install Menu appears, select the following options in sequence

<e>	to install CP-BOOTROM
<y>	to start installation
<a>	to continue with the upgrade

13 A Status Summary is displayed indicating what was installed. Press <CR> to return to the Install Menu.

14 **Remove the diskette** from the IODU/C.

15 Select the following options to quit the Install Tool:

<q>	to quit
<y>	to confirm quit
<a>	to reboot the system.

Note: The system will reboot. Wait for the “INI” and “DONE” messages to display before continuing. It will take at least 70 seconds between the “DONE” and “INI” messages.

After the system initialization has finished (INI messages are no longer displayed on the system terminal), check for dial tone on a telephone set.

16 Following a successful dial tone test, perform the following basic sanity tests:

- Make sure calls can be placed
- Check for error messages, line noise, chatter, or other problems. Track sources and resolve problems as necessary.

To place the system back in the redundant (normal) mode with automatic switchover capability. Perform the following five steps in uninterrupted sequence on the *inactive* Core (the Core with the replaced CP card):

17 Press and hold down the MAN RST button on the CP card of the *inactive* Core.

18 While holding down the MAN RST button, set the NORM/MAINT switch on the same CP card to NORM.

19 Enable all CNI switches in the inactive Core.

20 Release the MAN RST button.

21 Set the CP card in the active Core to NORM.

After several minutes, an “HWI533” message is issued by the *active* Core indicating that the *inactive* Core memory is being synchronized with the *active* Core memory.

22 Log into the system through the terminal, then check the status of the replacement CP card from the active side:

LD 135	load LD 135
STAT CPU	obtain the CPU status

23 If there are CCED messages generated by the STAT CPU command on the replacement CP card, set the NORM/MAINT switch to MAINT, press the reload (MAN RST) button and set the NORM/MAINT switch back to NORM. **(**It may take 2 to 4 minutes for memory synchronization to take place.)

After the HWI0533 message is displayed, test the replacement CP card from the active CPU:

TEST CPU	the test causes a cold start on the inactive CPU

If the test results in:

CCED014	"Test failed because unable to enter SPLIT mode"

On the active CP card set the NORM/MAINT switch to NORM, and from the active side enter:

TEST CPU	to test the CP card

24 Set the NORM/MAINT switch to NORM on the active CP card (if not already set).

25 Check the status of the CPUs:

STAT CPU

26 Test the CPU.

TEST CPU

27 Check the status of the CNIs:

STAT CNI

28 Switch Cores and exit the program:

SCPU	
********	exit LD 135

Installing new NT9D19, NT5D10 or NT5D03 CP cards

> ***Note:*** Use this procedure for systems that are equipped with IOP/CMDU or separate IOP and CMDU cards.

The following procedures describe how to increase the CP card memory by installing a new CP card with higher memory capacity. It can be used to replace and upgrade the following CP cards:

- **80 MB** NT9D19EA card with a new **96 MB** NT9D19CA card
- **80 MB** NT5D10CA card with a new **112 MB** NT5D10DA card
- **80 MB** NT5D03DA card with a new **128 MB** NT5D03EA card

Upgrade preparation

Before proceeding with the upgrade procedure, make a backup copy of the customer database using the data dump routine:

1 Log into the system.

2 Load the Equipment Data Dump Program (LD 43). At the prompt, enter

LD 43	to load the program

3 When “EDD000” appears on the terminal, enter

EDD	to begin the data dump

4 When “DATABASE BACKUP COMPLETE” or “DATADUMP COMPLETE” appears on the terminal, enter

********	to exit the program

> **CAUTION**
>
> If the data dump is not successful, do not continue; contact your technical support organization. A data dump problem must be corrected before proceeding.

5 Check total memory allocation before the upgrade.

LD 10	to load the program

When the header for overlay 10 is displayed, note the value associated with Total Memory. After the upgrade, compare Total Memory before and after the upgrade. Total Memory should be greater after the upgrade.

Exit the program:

********	to exit the program

Splitting the Cores

Note: This section is not applicable to option 51C systems. Skip to "Replacing the CP card and upgrading the software" on page 204 to continue with the memory upgrade.

To install a new CP card in Core 1, first split the CPUs:

1 Verify that the disk drives are synchronized:

LD 137	to load the program
STAT	to get the status of the disk drives

If the disks are synchronized, proceed with step 2. If they are not synchronized, execute the SYNC command:

SYNC	to synchronize the drives
********	to exit the program

2 Verify that CPU 0 is the active CPU:

LD 135	to load the program
STAT CPU	to check CPU status

If CPU 0 is active, proceed with step 3. If CPU 0 is not the active CPU, swap CPUs and verify again:

SCPU	to swap CPUs
STAT CPU	to check CPU status

3 Set the MAINT/NORM switch on the NT9D19 or NT5D10 or NT5D03 CP card in Core 0 to MAINT.

4 Set the ENB/DIS switch on all CNI cards in Core 1 to DIS.

5 Perform the following three steps in uninterrupted sequence:

- press and hold the MAN RST button on the CP card in Core 1
- set the MAINT/NORM switch on the CP card in Core 1 to MAINT
- release the MAN RST button

Replacing the CP card and upgrading the software

1 Connect a terminal to the CPSI port to J25 of the I/O panel at the back of the core. Be sure it is configured as follows. The recommended baud rate is 9600, to be the same as the CPSI port.

- 7 data bits
- 1 stop bit
- Space parity
- Full duplex
- XON protocol

2 Press the MAN RST button on the NT9D19 or NT5D10 or NT5D03 CP card in Core 1 and then immediately disengage the lock latches and remove the card.

3 Verify that the MAINT/NORM switch on the new NT9D19 or NT5D10 or NT5D03 CP card is set to MAINT.

4 Set the ENB/DIS switch on the IOP/CMDU card in Core 1 to DIS and remove the card. Replace the current QMM42 cartridge with the new QMM42 cartridge. Reinstall and enable the card.

5 Insert disk A1 from the target software upgrade package into the CMDU or IOP/CMDU.

6 Insert a new NT9D19/NT5D10/NT5D03CP card in the same slot and secure the lock latches. The system will automatically load the software installation program.

7 From the main menu, select the following:

<g>	to update the flash ROMs from the hard disk
<y>	to confirm installation

8 Press <CR> to return to the main menu.

9 Upon successful installation of software on the flash ROMs, select the following to update the CP-BOOT ROM:

<e>	to install CP-BOOT ROM
<y>	to confirm installation

10 Press <CR> to return to the main menu.

11 Select the following to quit and reload the system:

<q>	to quit
<y>	to confirm quit
<a>	to reboot the system

The system will automatically perform a sysload.

12 Verify that the “DONE” message appears on the system terminal.

Note: The SYSTEM INI message may take 70 seconds or more to appear.

13 After the system initializes, log into the system.

14 Set date and time:

LD 2	to load the overlay
STAD	**DD MM YY HR MN SC**

15 Load the Equipment Data Dump Program (LD 43). At the prompt, enter

LD 43	to load the program

16 When “EDD000” appears on the terminal, enter

EDD	to begin the data dump

17 When “DATABASE BACKUP COMPLETE” and “DATADUMP COMPLETE” appears on the terminal, enter

********	to exit the program

CAUTION

If the data dump is not successful, do not continue; contact your technical support organization. A data dump problem must be corrected before proceeding.

18 For options 61C, 81, and 81C, continue with step 19. For option 51C systems, skip to “Completing the upgrade for option 51C” on page 194.

19 Set the ENB/DIS switch on the IOP or IOP/CMDU card to DIS in Core 0.

20 Set the ENB/DIS switches on all CNI cards in Core 0 to DIS.

21 Set the ENB/DIS switches on all CNI cards in Core 1 to ENB.

> **CAUTION**
> Disabling CNI cards in Core 0 will momentarily interrupt call processing. Calls established or in process will be dropped. Call processing will resume after the “SYSTEM INI” messages appear on the system terminal (approximately 1 minute).

22 Press the MAN INT button on the CP Card in Core 1.

After the system initialization has finished (INI messages are no longer displayed on the system terminal), check for dial tone on a telephone set. If dial tone is present, proceed with the next step.

Upgrading Core 0

Once the CP card in Core 1 is upgraded, you may proceed to upgrade the CP card in Core 0:

1 Connect a terminal to the CPSI port in Core 1 to J25 of the I/O panel at the back of the core. Be sure it is configured as follows. The recommended baud rate is 9600, to be the same as the CPSI port.

- 7 data bits
- 1 stop bit
- Space parity
- Full duplex
- XON protocol

2 Verify that the MAINT/NORM switch on the CP card in Core 0 is set to MAINT.

3 Verify that the ENB/DIS switches on all CNI cards in Core 0 are set to DIS.

4 Verify that the IOP or IOP/CMDU card in Core 0 is set to DIS and remove the card. Replace the current QMM42 cartridge with the QMM42 cartridge for release 24 software. Reinstall and enable the card.

Replacing the CP card and upgrading the software in Core 0

1 Press the MAN RST button on the NT9D19, NT5D10 or NT5D03 CP card in Core 0 and then immediately disengage the lock latches and remove the card.

2 Insert disk A1 of the software upgrade package into CMDU or IOP/CMDU 0.

3 Verify that the MAINT/NORM switch on the new NT9D19, NT5D10 or NT5D03 CP card is set to MAINT.

4 Insert a new NT9D19, NT5D10 or NT5D03 CP card in the same slot in Core 0 and secure the lock latches. The system will automatically load the software installation program.

5 From the main menu, select the following:

<g>	to update the flash ROMs from the hard disk
<y>	to confirm installation

6 Press <CR> to return to the main menu.

7 Upon successful installation of software on the flash ROMs, select the following to update the CP-BOOT ROM:

<e>	to install CP-BOOT ROM
<y>	to confirm installation

8 Press <CR> to return to the main menu.

9 Remove the disk from the CMDU or IOP/CMDU.

10 Select the following to quit and reload the system:

<q>	to quit
<y>	to confirm quit
<a>	to reboot the system

The system will automatically perform a sysload.

11 Perform the following three steps in rapid succession:

- Press and hold the MAN RST button
- Set the MAINT/NORM switch on the CP card in Core 0 to NORM
- Release the MAN RST button

A “HW1534” message from the CPSI (Core 1) or SDI port indicates the start of memory synchronization. Within 10 minutes, an “HWI533” message from the CPSI or SDI port indicates that the contents of Core 0 memory is copied to Core 1 memory. Wait until the memory synchronization is complete before continuing.

12 Set the ENB/DIS switches on all CNI cards in Core 0 to ENB.

13 Set the MAINT/NORM switch on the CP card in Core 1 to NORM.

Completing the upgrade for options 61C, 81, and 81C

1 Check total memory allocation after the upgrade.

LD 10	to load the program

When the header for overlay 10 is displayed, note the value associated with Total Memory. Compare Total Memory before and after the upgrade. Total Memory should be greater after the upgrade.

Exit the program:

********	to exit the program

To complete the field upgrade of the NT9D19 or NT5D10 or NT5D03 CP card, synchronize the disk drives, and verify CPU and CNI status:

2 Verify CPU redundancy and CNI function:

LD 135	to load the overlay
STAT CPU	to check the status of CPU 0
STAT CNI	to verify function of CNIs in Core 0
TEST CPU	to test CPU 0
SCPU	switch to CPU 0
STAT CPU	to check the status of CPU 1
STAT CNI	to verify function of CNIs in Core 1
TEST CPU	to test CPU 1

SCPU	switch to CPU 1
********	to exit the program

3 Synchronize the disk drives:

LD 137	to load the overlay
SYNC	to synchronize the disk drives
********	to exit the program

The field upgrade to the new memory configuration is complete.

Completing the upgrade for option 51C

To complete the NT9D19, NT5D10 or NT5D03 CP card upgrade, verify CPU and CNI status:

1 Check total memory allocation after the upgrade.

LD 10	to load the program

When the header for overlay 10 is displayed, note the value associated with Total Memory. Compare Total Memory before and after the upgrade. Total Memory should be greater after the upgrade.

Exit the program:

********	to exit the program

2 Verify CPU redundancy and CNI function:

LD 135	to load the overlay
STAT CPU	to check the status of CPU 0
STAT CNI	to verify function of CNIs in Core 0
********	to exit the program

The upgrade to the new memory configuration is complete.

Increasing memory on NT6D66 CP cards

This memory upgrade is not compatible with release 19 or earlier software.

Use the following procedures to upgrade the CP card memory on NT6D66AA/AB CP cards in options 51C and 61C. Several system upgrades to option 51C and 61C include procedures to upgrade CP card memory. If you are upgrading to one of these systems, do not use the procedures in this document; instead, locate the upgrade procedure that applies to your system (see *Upgrade system installation to X11 release 24* (553-3001-258) and use the memory upgrade procedure contained therein. Options 51C and 61C running release 20 or later software may also have CP card memory upgraded, but it is not required.

Memory upgrades consist of replacing memory SIMMs on each card, or installing new, complete 48 MB CP cards. These procedures also include steps for performing an upissue from release 19 to release 22 on option 51C, 61C, and 81C systems.

This memory upgrade procedures also include steps for performing the Automatic Inline Conversion procedure supported by X11 release 22 from X11 release 21. If your system is running on a software release earlier than release 21, it must be converted to release 21 before continuing with the procedure.

> ***Note:*** This procedure is for upgrading memory on NT6D66AA/AB CP cards only.

CAUTION

Northern Telecom recommends that only properly trained distributor personnel perform this memory SIMM upgrade. Upgrade memory on NT6D66AA/AB CP cards involves some risk of damage to SIMMs and CP cards; personnel performing this upgrade to so at their own risk. Personnel should have spare CP cards on hand or risk installation delay or system down time. Northern Telecom assumes no responsibility for any damage incurred, installation delays due to board damage, or loss due to damage or system down time.

If your system is an option 51C or 61C that is already running on X11 release 21 software, it is not necessary to reinstall release 21 software. However, you must still use “Procedure 11: Software Installation Tool” to upgrade CP and IOP ROMs, where indicated in this procedure.

Upgrading existing NT6D66AA/AB CP cards to 48 MB

These procedures include instructions describing how to increase CP card memory by installing additional memory SIMMs on each of the CP cards.

Upgrading the NT6D66AA/AB CP card consists of

— splitting the CPUs

— upgrading the system software in Core 1

— upgrading the ROMs in Core 1

— installing memory SIMMs on CP card in Core 1

— swapping CPUs

— install memory SIMMs on CP card in Core 0

— upgrading the system software in Core 0

— upgrading the ROMs in Core 0

— synchronizing the hard disks

Memory SIMM precautions

Upgrading a CP card consists of the removal of SIMM(s) and the installation of new larger capacity SIMM(s). If you are installing memory SIMMs on the CP cards, view the video tape “CP Card SIMMs Installation Video” included in the upgrade package before attempting this upgrade.

CAUTION

Memory SIMMs are static-sensitive semiconductor devices which require that you take some electrostatic discharge (ESD) precautions. An ESD-safe work station is recommended on which the CP card can be placed. The minimum requirement is a properly-grounded ESD ground strap worn by the upgrade personnel at all times.

1 Find and test an appropriate ground point for the antistatic mat, as described in the video tape provided.

2 Attach the antistatic mat ground wire to the ground point.

3 Place ESD wrist strap on your wrist and connect the wrist strap ground wire to the antistatic mat.

Upgrade preparation

Before proceeding with the upgrade procedure, make a backup copy of the customer database using the data dump routine:

1 Log into the system.

2 Load the Equipment Data Dump Program (LD 43). At the prompt, enter

LD 43	to load the program

3 When “EDD000” appears on the terminal, enter

EDD	to begin the data dump

4 When “DATABASE BACKUP COMPLETE” or “DATADUMP COMPLETE” appears on the terminal, enter

********	to exit the program

CAUTION

If the data dump is not successful, do not continue; contact your technical support organization. A data dump problem must be corrected before proceeding.

5 Check total memory allocation before the upgrade.

LD 10	to load the program

When the header for overlay 10 is displayed, note the value associated with Total Memory. After the upgrade, compare Total Memory before and after the upgrade. Total Memory should be greater after the upgrade.

Exit the program:

********	to exit the program

Upgrading Core1

To upgrade a new CP card in Core 1, first split the CPUs:

Split the CPUs

1 Verify that the disk drives are synchronized:

LD 137	to load the program
STAT	to get the status of the disk drives

If the disks are synchronized, proceed with step 2. If they are not synchronized, execute the SYNC command:

SYNC	to synchronize the drives
********	to exit the program

2 Verify that CPU 0 is the active CPU:

LD 135	to load the program
STAT CPU	to check CPU status

If CPU 0 is active, proceed with step 3. If CPU 0 is not the active CPU, swap CPUs and verify again:

SCPU	to swap CPUs
STAT CPU	to check CPU status

3 Set the MAINT/NORM switch on the NT6D66 CP card in Core 0 to MAINT.

4 Set the ENB/DIS switch on all CNI cards in Core 1 to DIS.

5 Perform the following three steps in uninterrupted sequence:

- press and hold the MAN RST button on the CP card in Core 1
- set the MAINT/NORM switch on the CP card in Core 1 to MAINT
- release the MAN RST button

The system is now operating in split mode.

Install system software and upgrade ROMs

At this time you will install system software if it is not already installed on the hard drive.

1 Connect a terminal to the CPSI port in Core 1 to J25 of the I/O panel at the back of the core. Be sure it is configured as follows. The recommended baud rate is 9600, to be the same as the CPSI port.

- 7 data bits
- 1 stop bit
- Space parity
- Full duplex
- XON protocol

2 Set the ENB/DIS switch on the NT6D67 IOP card in Core 1 to DIS and remove the card. Replace the current QMM42 cartridge with the new QMM42 cartridge. Reinstall and enable the card.

3 Insert disk A1 from the software package into the CMDU or IOP/CMDU in Core 1.

4 Press the MAN RST button on the NT6D66 CP card in Core 1. The system will automatically load the software installation program.

5 From the main menu, select the following:

<a>	to install software, CP-BOOT and IOP ROMs
<y>	to confirm installation of all components
<a>	to start the upgrade

Follow the screen directions requiring disk insertion. Multiple disks will be requested.

6 When the software installation procedure has completed, select the following options in sequence to perform the ROM upgrade:

<a>	to continue with ROM upgrade
<a>	to continue with CP-BOOT ROM upgrade
<y>	to start installation
<a>	to continue with IOP-ROM upgrade
<y>	to start installation

7 Remove any diskettes from the CMDU or IOP/CMDU.

8 Select the following options to quit and reload the system:

<q>	to quit
<yes>	to confirm quit
<a>	to reboot the system

Upgrading the NT6D66AA CP card memory in Core 1

1 Press the MAN RST button on the NT6D66AA CP card in Core 1 and then immediately disengage the lock latches and remove the card.

2 Place the CP card SIMM-side up on the antistatic mat.

3 Locate the two SIMMs designated T5 and T6 (see Figure 3).

4 Remove the SIMM from location T6 first, then from location T5:

- Using the non-conductive screw driver provided, carefully move each latch away first from one end of the SIMM, and then the other end. The SIMM will pivot away from the others until it is at approximately a 50- to 70-degree angle to the board (see Figure 4).

Figure 3
SIMM Identification on the NT6D66AA CP card

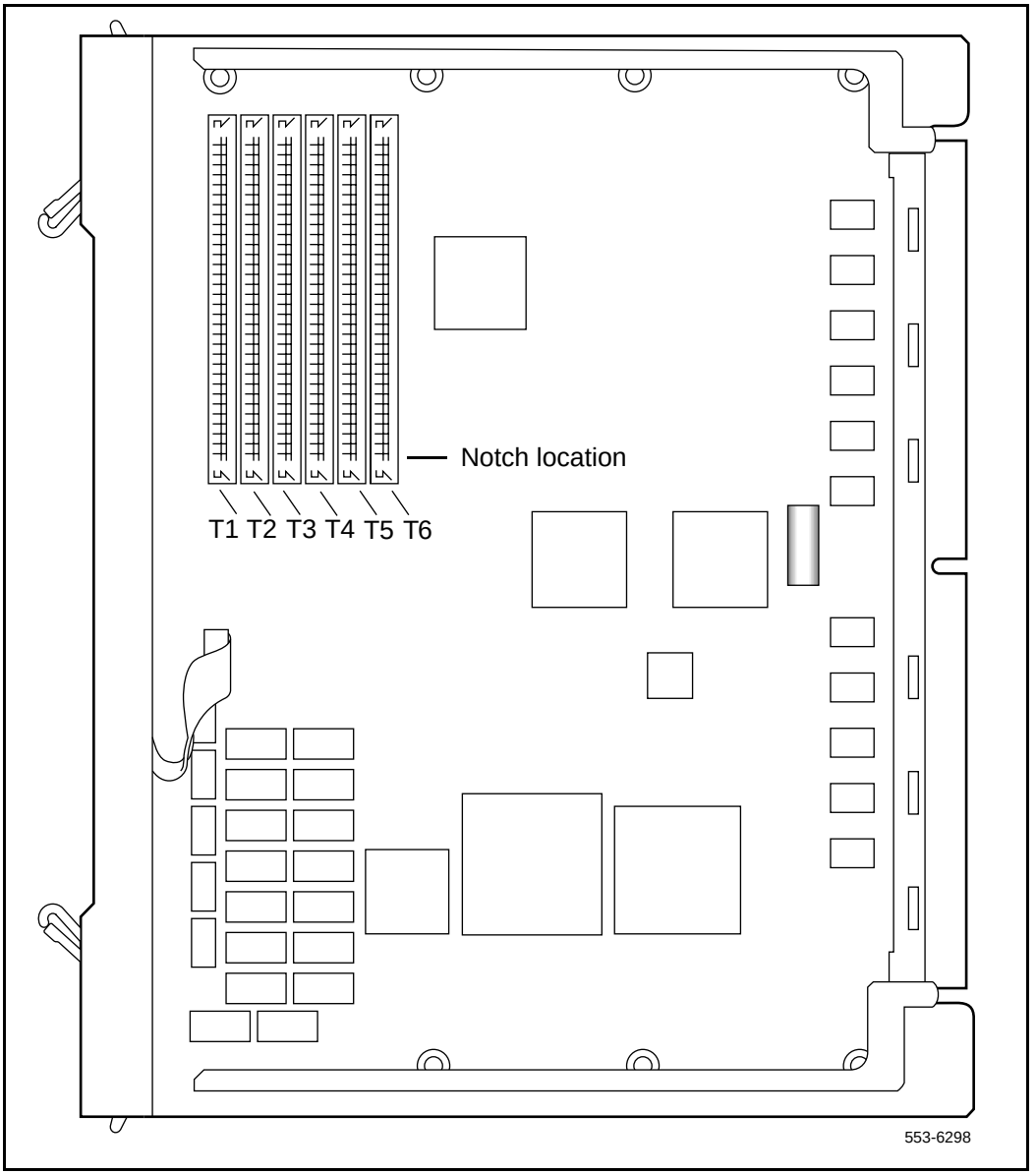

Figure 4
SIMM Installation on the NT6D66AA CP card

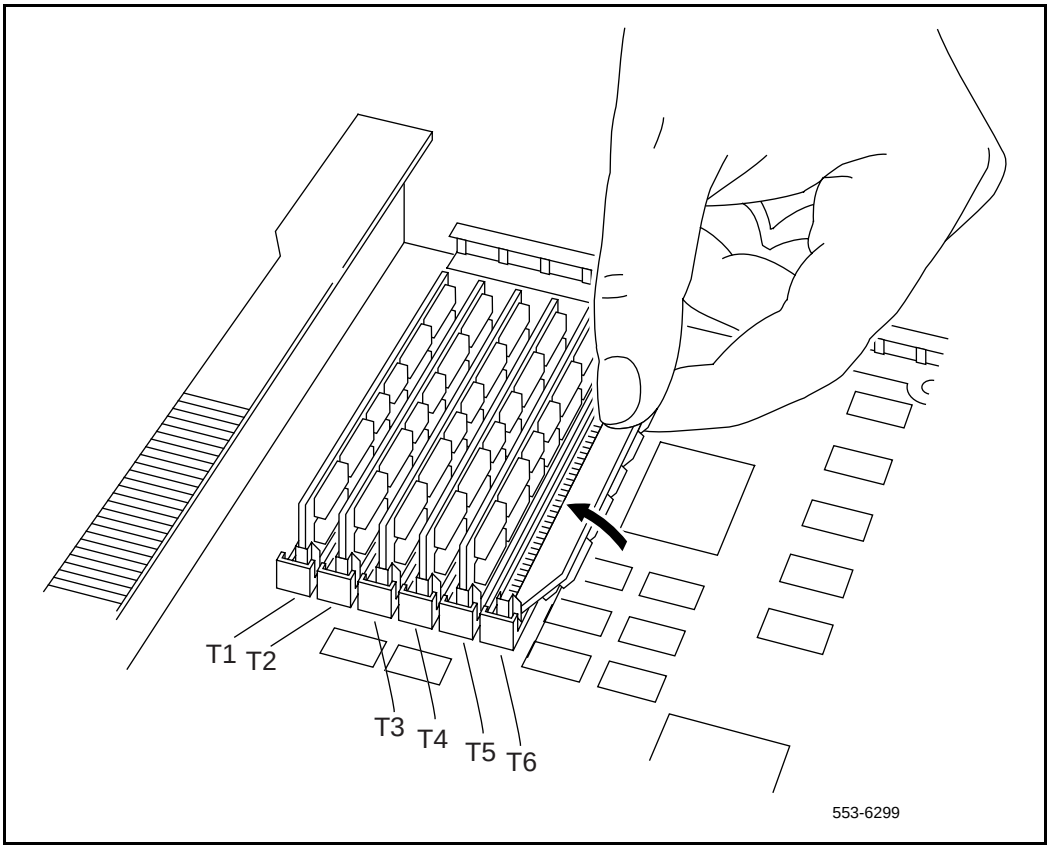

Note: If, using the non-conductive screw driver, the SIMM does not release from the latches, use your thumbnails, one on each latch, to release the latches: for plastic latches, the latches are located on the ends of each SIMM; for metal latches, levers protrude from each latch. Carefully move the latches outward simultaneously until the SIMM pivots away from the others and it is at approximately a 50- to 70-degree angle to the board.

- Gently lift the old SIMM out of the socket.

5 Install a new 16 MB SIMM at location T5 first, then one at location T6:

- Orient the new SIMM so that the notch at one end of the SIMM aligns with the key at one end of the SIMM socket (see Figure 3).
- Hold the SIMM at approximately a 50- to 70-degree angle and gently insert the SIMM into the socket (see Figure 4).

> **CAUTION**
> Do not force the SIMM into the socket. Any damage caused to the socket will require replacement of the NT6D66 CP card.

- Using your thumbs and index fingers only (at the upper corners of the SIMM), carefully lean the SIMM toward the others until it is upright and the latch at each end of the SIMM snaps into place. If necessary, use the non-conductive screw driver to assist you in opening each latch while you move the SIMM into the upright position.

6 Verify that the MAINT/NORM switch on the newly upgraded CP card is set to MAINT.

7 Insert the CP card in the same slot in Core 1 and secure the lock latches. The system will automatically perform a sysload during which several messages will appear on the system terminal.

8 Verify that the message “SYS702 48” appears on the system terminal during the sysload.

9 Verify that the “DONE” message appears on the system terminal.

Note: The SYSTEM INI message may take 70 seconds or more to appear.

10 After the system initializes, log into the system.

11 Set date and time:

LD 2	to load the overlay
STAD	**DD MM YY HR MN SC**

12 Configure the system with the new memory configuration:

LD 17	to load the overlay

13 For each prompt, type the following response:

REQ	**CHG**
TYPE	**CEQU**

14 Press the RETURN key until the “MCFN” prompt appears, then type

MCFN	**4 4 4 4 16 16**

Note: Be sure to insert one space between the values when typing.

15 Press the RETURN key until the “REQ” prompt appears and then enter:

REQ	********

16 Load the Equipment Data Dump Program (LD 43). At the prompt, enter

LD 43	to load the program

17 When “EDD000” appears on the terminal, enter

EDD	to begin the data dump

18 When “DATABASE BACKUP COMPLETE” or “DATADUMP COMPLETE” appears on the terminal, enter

********	to exit the program

CAUTION

If the data dump is not successful, do not continue; contact your technical support organization. A data dump problem must be corrected before proceeding.

19 Set the ENB/DIS switch on the IOP or IOP/CMDU card to DIS in Core 0.

20 Set the ENB/DIS switches on all CNI cards in Core 1 to ENB.

21 Set the ENB/DIS switches on all CNI cards in Core 0 to DIS.

> **CAUTION**
> Disabling CNI cards in Core 0 will momentarily interrupt call processing. Calls established or in process will be dropped. Call processing will resume after the “SYSTEM INI” messages appear on the system terminal (approximately 1 minute).

22 Press the MAN INT button on the CP Card in Core 1.

After the system initialization has finished (INI messages are no longer displayed on the system terminal), check for dial tone on a telephone set. If dial tone is present, proceed with the next step.

Upgrading Core 0

Once the CP card in Core 1 is upgraded, you may proceed to upgrade the CP card in Core 0:

1 Connect a terminal to the CPSI port in Core 1 to J25 of the I/O panel at the back of the core. Be sure it is configured as follows. The recommended baud rate is 9600, to be the same as the CPSI port.

- 7 data bits
- 1 stop bit
- Space parity
- Full duplex
- XON protocol

2 Verify that the MAINT/NORM switch on the CP card in Core 0 is set to MAINT.

3 Verify that the ENB/DIS switches on all CNI cards in Core 0 are set to DIS.

4 Verify that the ENB/DIS switch on the IOP or IOP/CMDU card in Core 0 is set to DIS and remove the card. Replace the current QMM42 cartridge with the new QMM42 cartridge. Reinstall and enable the card.

Upgrading the NT6D66BAB CP card memory in Core 1

1 Press the MAN RST button on the NT6D66AB CP card in Core 1 and then immediately disengage the lock latches and remove the card.

2 Place the CP card SIMM-side up on the antistatic mat.

3 Locate the 8 MB SIMM designated T3 (see Figure 3) .

4 Remove the SIMM from location T3:

- Using the non-conductive screw driver provided, carefully move each latch away first from one end of the SIMM, and then the other end. The SIMM will pivot away from the others until it is at approximately a 50- to 70-degree angle to the board (see Figure 4).

Note: If, using the non-conductive screw driver, the SIMM does not release from the latches, use your thumbnails, one on each latch, to release the latches: for plastic latches, the latches are located on the side facing the card faceplate; for metal latches, the levers protrude from each latch. Carefully move the latches outward simultaneously until the SIMM pivots away from the others and it is at approximately a 50- to 70-degree angle to the board

- Gently lift the SIMM out of the socket.

Figure 5
NT6D66AB/DB CP card SIMM Identification

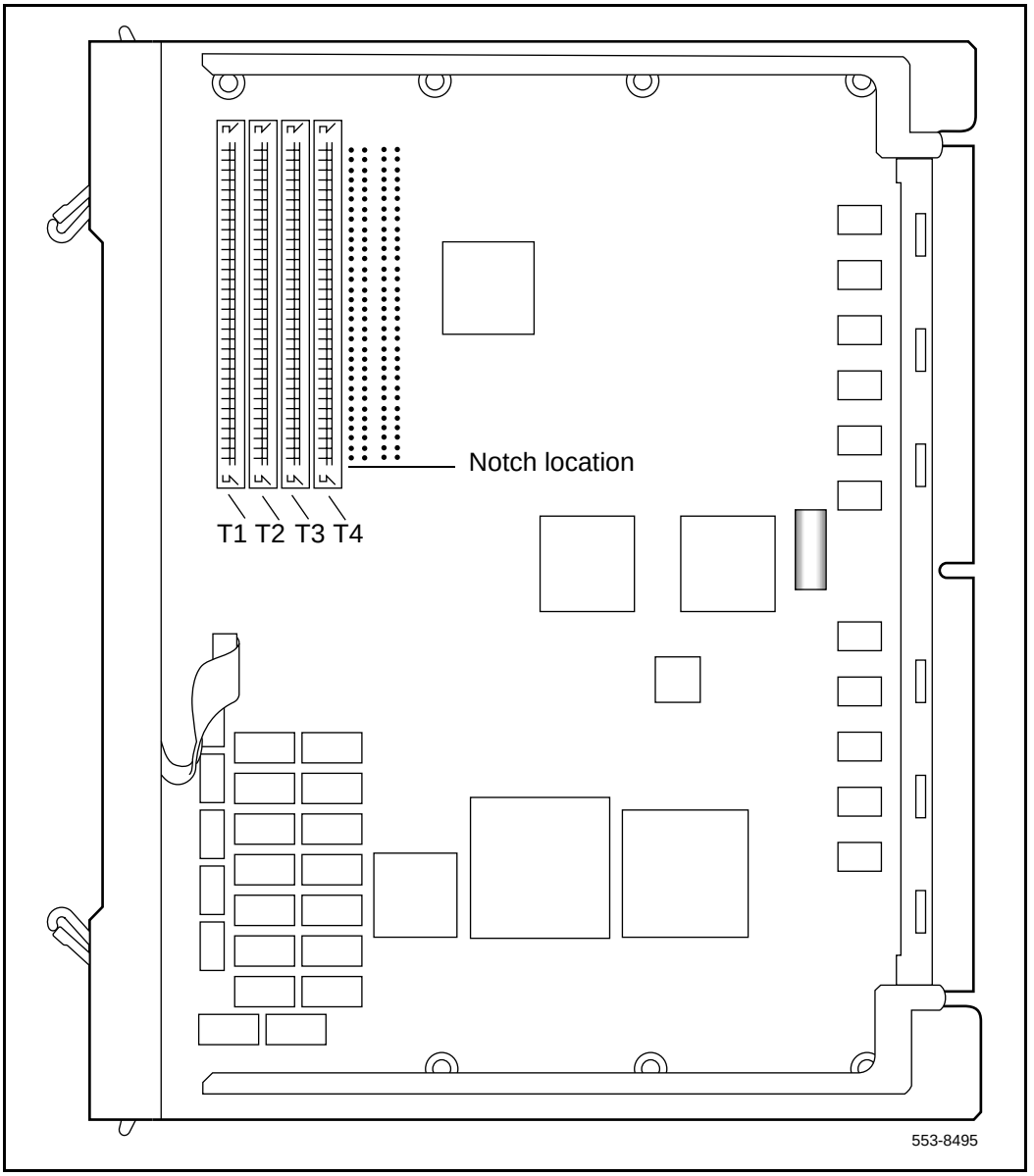

5 Install each of the two new 16 MB SIMMs beginning with SIMM socket T3:

- Orient the new SIMM so that the notch at one end of the SIMM aligns with the key at one end of the SIMM socket (see Figure 5 on page 222).
- Hold the SIMM at approximately a 50- to 70-degree angle and gently insert the SIMM into the socket (see Figure 6 on page 224).

CAUTION

Do not force the SIMM into the socket. Any damage caused to the socket will require replacement of the entire NT6D66 CP card.

- Using your thumbs and index fingers only (at the upper corners of the SIMM), carefully lean the SIMM toward the others until it is upright and the latch at each end of the SIMM snaps into place. If necessary, use the non-conductive screw driver to assist you in opening each latch while you move the SIMM into the upright position.
- Repeat Step 4 and install the second 16 MB SIMM in socket T4.

6 Verify that the MAINT/NORM switch on the newly upgraded CP card is set to MAINT.

7 Insert the CP card in the same slot in Core 1 and secure the lock latches. The system will automatically perform a sysload during which several messages will appear on the system terminal.

8 Verify that the message “SYS702 48” appears on the system terminal during the sysload.

9 Verify that the “DONE” message appears on the system terminal.

Note: The SYSTEM INI message may take 70 seconds or more to appear.

10 After the system initializes, log into the system.

Figure 6
NT6D66AB/DB CP card SIMM Installation

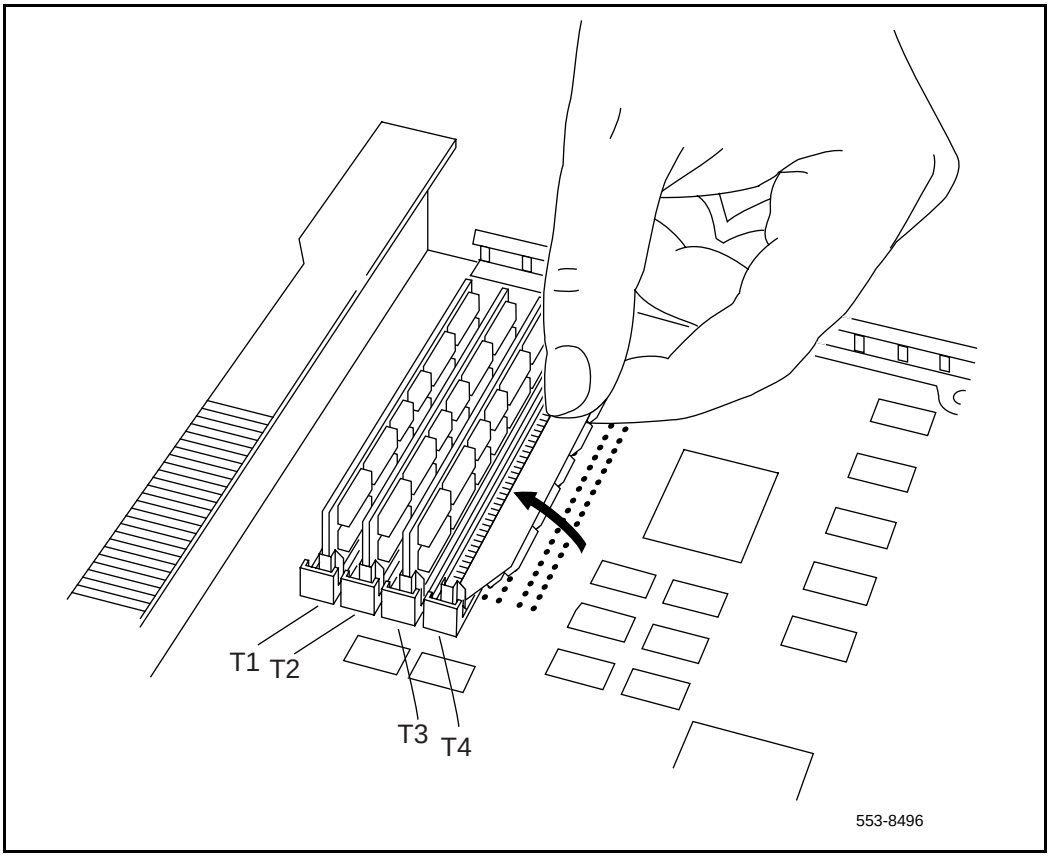

11 Set date and time:

LD 2	to load the overlay
STAD	**DD MM YY HR MN SC**

12 Configure the system with the new memory configuration:

LD 17	to load the overlay

13 For each prompt, type the following response:

REQ	**CHG**
TYPE	**CEQU**

14 Press the RETURN key until the “MCFN” prompt appears, then type:

MCFN	**8 8 16 16**

Note: Be sure to insert one space between the values when typing.

15 Press the RETURN key until the “REQ” prompt appears and then enter:

REQ	********

16 Load the Equipment Data Dump Program (LD 43). At the prompt, enter

LD 43	to load the program

17 When “EDD000” appears on the terminal, enter

EDD	to begin the data dump

18 When “DATABASE BACKUP COMPLETE” or “DATADUMP COMPLETE” appears on the terminal, enter

********	to exit the program

CAUTION

If the data dump is not successful, do not continue; contact your technical support organization. A data dump problem must be corrected before proceeding.

19 Set the ENB/DIS switch on the IOP or IOP/CMDU card to DIS in Core 0.

20 Set the ENB/DIS switches on all CNI cards in Core 1 to ENB.

21 Set the ENB/DIS switches on all CNI cards in Core 0 to DIS.

> **CAUTION**
> Disabling CNI cards in Core 0 will momentarily interrupt call processing. Calls established or in process will be dropped. Call processing will resume after the “SYSTEM INI” messages appear on the system terminal (approximately 1 minute).

22 Press the MAN INT button on the CP Card in Core 1.

After the system initialization has finished (INI messages are no longer displayed on the system terminal), check for dial tone on a telephone set. If dial tone is present, proceed with the next step.

Upgrading Core 0

Once the CP card in Core 1 is upgraded, you may proceed to upgrade the CP card in Core 0:

1 Connect a terminal to the CPSI port in Core 1 to J25 of the I/O panel at the back of the core. Be sure it is configured as follows. The recommended baud rate is 9600, to be the same as the CPSI port.

- 7 data bits
- 1 stop bit
- Space parity
- Full duplex
- XON protocol

2 Verify that the MAINT/NORM switch on the CP card in Core 0 is set to MAINT.

3 Verify that the ENB/DIS switches on all CNI cards in Core 0 are set to DIS.

4 Verify that the ENB/DIS switch on the IOP or IOP/CMDU card in Core 0 is set to DIS and remove the card. Replace the current QMM42 cartridge with the new QMM42 cartridge. Reinstall and enable the card.

Updating CP ROMs

1 Insert disk A1 from the software upgrade package into CMDU or IOP/CMDU 0.

2 Verify that the MAINT/NORM switch on the NT6D66 CP card in Core 0 is set to MAINT.

3 Press the MAN RST button on the CP card in Core 0. The system will automatically load the software installation program.

4 At the main menu, select the following options to upgrade the CP ROMs and follow the screen directions to update the CP ROMs from the floppy disk.

<e>	to upgrade CP ROMs only
<y>	to start the upgrade
<b>	to upgrade CP ROMs from floppy disk

Follow all screen directions until you have upgraded the CP ROMs.

5 When the CP ROM upgrade is complete, select the option to return to the main menu.

6 At the main menu, select the following options to upgrade the IOP ROMs and follow the screen directions to update the IOP ROMs from the floppy disk:

<f>	to upgrade IOP ROMs only
<y>	to start the upgrade
<b>	to upgrade IOP ROMs from floppy disk

Follow the screen directions to complete the IOP ROM upgrade and return to the main menu.

7 Select the following options to quit:

<q>	to quit
<yes>	to confirm quit

8 Remove the diskette from the CMDU or IOP/CMDU in Core 0.

9 Press the MAN RST button on the NT6D66 CP card in Core 0 and then immediately disengage the lock latches and remove the card.

Updating the core 0 NT6D66AA CP card memory

1 Place the CP card SIMM-side up on the antistatic mat.

2 Locate the two 4 MB SIMMs designated T5 and T6 (see Figure 3 on page 216)

3 Remove the SIMM from location T6 first, then from location T5:

- Using the non-conductive screw driver provided, carefully move each latch away first from one end of the SIMM, and then the other end. The SIMM will pivot away from the others until it is at approximately a 50- to 70-degree angle to the board (see Figure 4 on page 217).

Note: If, using the non-conductive screw driver, the SIMM does not release from the latches, use your thumbnails, one on each latch, to release the latches: for plastic latches, the latches are located on the ends of each SIMM; for metal latches, levers protrude from each latch. Carefully move the latches outward simultaneously until the SIMM pivots away from the others and it is at approximately a 50- to 70-degree angle to the board.

- Gently lift the SIMM out of the socket.

Updating the core 0 NT6D66AB CP card memory

1 Place the CP card SIMM-side up on the antistatic mat.

2 Locate the 8 MB SIMM designated T3 (see Figure 5 on page 222)

3 Remove the SIMM from location T3:

- Using the non-conductive screw driver provided, carefully move each latch away first from one end of the SIMM, and then the other end. The SIMM will pivot away from the others until it is at approximately a 50- to 70-degree angle to the board (see Figure 6 on page 224).

Note: If, using the non-conductive screw driver, the SIMM does not release from the latches, use your thumbnails, one on each latch, to release the latches: for plastic latches, the latches are located on the ends of each SIMM; for metal latches, levers protrude from each latch. Carefully move the latches outward simultaneously until the SIMM pivots away from the others and it is at approximately a 50- to 70-degree angle to the board.

- Gently lift the SIMM out of the socket.

4 Install a new 16 MB SIMM at location T3 first, then one at location T4:

- Orient the new SIMM so that the notch at one end of the SIMM aligns with the key at one end of the SIMM socket (see Figure 5 on page 222).
- Hold the SIMM at approximately a 50- to 70-degree angle and gently insert the SIMM into the socket (see Figure 6 on page 224).

CAUTION

Do not force the SIMM into the socket. Any damage caused to the socket will require replacement of the NT6D66 CP card.

- Using your thumbs and index fingers only (at the upper corners of the SIMM), carefully lean the SIMM toward the others until it is upright and the latch at each end of the SIMM snaps into place. If necessary, use the non-conductive screw driver to assist you in opening each latch while you move the SIMM into the upright position.

5 Insert the CP card in the same slot in Core 0 and secure the lock latches.

The system will automatically perform a sysload during which several messages will appear on the system terminal. Verify that the message “SYS702 48” appears on the terminal during the sysload.

6 Perform the following three steps in rapid succession:

- Press and hold the MAN RST button
- Set the MAINT/NORM switch on the CP card in Core 0 to NORM
- Release the MAN RST button

Within 10 minutes, an “HWI533” message from the CPSI (Core 1) or SDI port indicates that the contents of Core 0 memory is copied to Core 1 memory. Wait until the memory synchronization is complete before continuing.

7 Set the ENB/DIS switches on all CNI cards in Core 0 to ENB.

Completing the upgrade

To complete the field upgrade of the new NT6D66 CP card, synchronize the disk drives, verify CPU and CNI status, and apply the new labels:

1 Check total memory allocation after the upgrade.

LD 10	to load the program

When the header for overlay 10 is displayed, note the value associated with Total Memory. Compare Total Memory before and after the upgrade. Total Memory should be greater after the upgrade.

Exit the program:

********	to exit the program

2 Synchronize the disk drives:

LD 137	to load the overlay
SYNC	to synchronize the disk drives
********	to exit the program

3 Verify CPU redundancy and CNI function:

LD 135	to load the overlay
STAT CPU	to check the status of CPU 0
STAT CNI	to verify function of CNIs in Core 0
TEST CPU	to test CPU 0
SCPU	switch to CPU 0
STAT CPU	to check the status of CPU 1
STAT CNI	to verify function of CNIs in Core 1
TEST CPU	to test CPU 1
SCPU	switch to CPU 1
********	to exit the program

4 Apply the new NT6D66DA labels over the NT6D66AA card designation on the faceplate of each NT6D66AA CP card upgraded, or apply new NT6D66DB labels over the NT6D66AB card designation on the faceplate of each NT6D66AB CP card upgraded.

The field upgrade of existing 24MB to 48MB CP cards is complete.

Replacing 24 MB CP cards with new 48 MB CP cards

These procedures include instructions describing how to install new 48 MB NT6D66DA/DB CP cards.

Upgrading the CP Card consists of

— splitting the CPUs

— upgrading the system software on Core 1

— installing the new 48 MB CP card in Core 1

— upgrading the ROMs in Core 1

— swapping CPUs

— installing the new 48 MB CP card in Core 0

— upgrading the ROMs in Core 0

— synchronizing the hard disks

Upgrade preparation

Before proceeding with the upgrade procedure, make a backup copy of the customer database using the data dump routine:

1 Log into the system.

2 Load the Equipment Data Dump Program (LD 43). At the prompt, enter

LD 43	to load the program

3 When “EDD000” appears on the terminal, enter

EDD	to begin the data dump

4 When “DATABASE BACKUP COMPLETE” or “DATADUMP COMPLETE” appears on the terminal, enter

********	to exit the program

CAUTION

If the data dump is not successful, do not continue; contact your technical support organization. A data dump problem must be corrected before proceeding.

5 Check total memory allocation before the upgrade.

LD 10	to load the program

When the header for overlay 10 is displayed, note the value associated with Total Memory. After the upgrade, compare Total Memory before and after the upgrade. Total Memory should be greater after the upgrade.

Exit the program:

********	to exit the program

Upgrading Core1

To install a new CP card in Core 1, first split the CPUs:

Split the CPUs

1 Verify that the disk drives are synchronized:

LD 137	to load the program
STAT	to get the status of the disk drives

If the disks are synchronized, proceed with step 2. If they are not synchronized, execute the SYNC command:

SYNC	to synchronize the drives
********	to exit the program

2 Verify that CPU 0 is the active CPU:

LD 135	to load the program
STAT CPU	to check CPU status

If CPU 0 is active, proceed with step 3. If CPU 0 is not the active CPU, swap CPUs and verify again:

SCPU	to swap CPUs
STAT CPU	to check CPU status

3 Set the MAINT/NORM switch on the NT6D66DA/DB CP card in Core 0 to MAINT.

4 Set the ENB/DIS switch on all CNI cards in Core 1 to DIS.

5 Perform the following three steps in uninterrupted sequence:

- press and hold the MAN RST button on the CP card in Core 1
- set the MAINT/NORM switch on the CP card in Core 1 to MAINT
- release the MAN RST button

6 Set the ENB/DIS switch on the NT6D67 IOP card in Core 1 to DIS and remove the card. Replace the current QMM42 cartridge with the new QMM42 cartridge. Reinstall and enable the card.

Install system software

At this time you will install system software if it is not already installed on the hard drive. Install the system software onto the hard drive using the instructions in Procedure 11: Software Installation Tool. Choose option *c* from the Software Installation Tool main menu to insure installation of the new system software.

1 Connect a terminal to the CPSI port in Core 1 to J25 of the I/O panel at the back of the core. Be sure it is configured as follows. The recommended baud rate is 9600, to be the same as the CPSI port.

- 7 data bits
- 1 stop bit
- Space parity
- Full duplex
- XON protocol

2 To activate the Software Installation Tool, insert disk A1 from the software package into the CMDU or IOP/CMDU in Core 1.

3 Press the MAN RST button on the NT6D66DA/DB CP card in Core 1. The system will automatically load the software installation program.

4 From the main menu, select the following:

<c>	to install software
<y>	to confirm installation of all components
<a>	to start the upgrade

Follow the screen directions requiring disk insertion. Additional disks will be requested. When software installation is complete, return to the main menu.

5 Remove the disk from the CMDU or IOP/CMDU.

CAUTION

Do not reboot the system from the Installation Tool menu at this time. Continue with the next section.

Replacing the CP card and updating ROMs in Core 1

1 Press the MAN RST button on the NT6D66AA/AB CP card in Core 1 and then immediately disengage the lock latches and remove the card.

2 Verify that the MAINT/NORM switch on the new NT6D66DA/DB CP card is set to MAINT.

3 Insert disk A1 from the software upgrade package into CMDU or IOP/CMDU 1.

4 Insert the new NT6D66DA/DB CP card in the same slot in Core 1 and secure the lock latches. The system will automatically load the software installation program.

5 At the main menu, select the following options to upgrade the CP ROMs and follow the screen directions to update the CP ROMs from the hard disk drive.

<e>	to upgrade CP ROMs only
<y>	to start the upgrade
<a>	to upgrade CP ROMs from hard disk drive

Follow all screen directions until you have upgraded the CP ROMs.

6 When the CP ROM upgrade is complete, select the option to return to the main menu.

7 At the main menu, select the following options to upgrade the IOP ROMs and follow the screen directions to update the IOP ROMs from the hard disk drive:

<f>	to upgrade IOP ROMs only
<y>	to start the upgrade
<a>	to upgrade IOP ROMs from hard disk drive

Follow the screen directions to complete the IOP ROM upgrade and return to the main menu.

8 Remove the diskette from CMDU or IOP/CMDU 1.

9 Select the The following options to quit and reload the system:

<q>	to quit
<y>	to confirm quit
<a>	to reboot the system

10 Power cycle the CP card in Core 1 as follows: Press the MAN RST button and then immediately disengage the lock latches and unseat the card from the backplane. Wait 5 seconds, reinsert the CP card, and secure the lock latches.

11 The system will automatically perform a sysload. Verify that the message “SYS702 48” appears on the system terminal during the sysload.

12 Verify that the “DONE” message appears on the system terminal.

Note: The SYSTEM INI message may take 70 seconds or more to appear.

13 After the system initializes, log into the system.

14 Set date and time:

LD 2	to load the overlay
STAD	**DD MM YY HR MN SC**

15 Configure the system with the new memory configuration:

LD 17	to load the overlay

16 For each prompt, type the following response:

REQ	**CHG**
TYPE	**CEQU**

17 Press the RETURN key until the “MCFN” prompt for a NT6D66DA CP card appears, then type:

MCFN **4 4 4 4 16 16**

or,

Press the RETURN key until the “MCFN” prompt for a NT6D66DB CP card appears, then type:

MCFN **8 8 16 16**

Note: Be sure to insert one space between the values when typing.

18 Press the RETURN key until the “REQ” prompt appears and then enter:

REQ ********

19 Load the Equipment Data Dump Program (LD 43). At the prompt, enter

LD 43 to load the program

20 When “EDD000” appears on the terminal, enter

EDD to begin the data dump

21 When “DATABASE BACKUP COMPLETE” or “DATADUMP COMPLETE” appears on the terminal, enter

******** to exit the program

CAUTION

If the data dump is not successful, do not continue; contact your technical support organization. A data dump problem must be corrected before proceeding.

22 Set the ENB/DIS switch on the IOP/CMDU card to DIS in Core 0.

23 Set the ENB/DIS switches on all CNI cards in Core 1 to ENB.

24 Set the ENB/DIS switches on all CNI cards in Core 0 to DIS.

> **CAUTION**
> Disabling CNI cards in Core 0 will momentarily interrupt call processing. Calls established or in process will be dropped. Call processing will resume after the “SYSTEM INI” messages appear on the system terminal (approximately 1 minute).

25 Press the MAN INT button on the CP Card in Core 1.

After the system initialization has finished (INI messages are no longer displayed on the system terminal), check for dial tone on a telephone set. If dial tone is present, proceed with the next step.

Upgrading Core 0

Once the CP card in Core 1 is upgraded, you may proceed to upgrade the CP card in Core 0:

1 Verify that the MAINT/NORM switch on the CP card in Core 0 is set to MAINT.

2 Verify that the ENB/DIS switches on all CNI cards in Core 0 are set to DIS.

3 Verify that the ENB/DIS switch on the IOP or IOP/CMDU card in Core 0 is set to DIS and remove the card. Replace the current QMM42 cartridge with the new QMM42 cartridge. Reinstall and enable the card.

Replacing the CP card and updating ROMs in Core 0

1 Connect a terminal to the CPSI port in Core 1 to J25 of the I/O panel at the back of the core. Be sure it is configured as follows. The recommended baud rate is 9600, to be the same as the CPSI port.

- 7 data bits
- 1 stop bit
- Space parity
- Full duplex
- XON protocol

2 Press the MAN RST button on the NT6D66AA/AB CP card in Core 0 and then immediately disengage the lock latches and remove the card.

3 Insert disk A1 from the software upgrade package into CMDU or IOP/CMDU 0.

4 Verify that the MAINT/NORM switch on the new NT6D66DA/DB CP card is set to MAINT.

5 Insert a new NT6D66DA/DB CP card in the same slot in Core 0 and secure the lock latches. The system will automatically load the software installation program.

6 At the main menu, select option *e* to upgrade the CP ROMs and follow the screen directions to update the CP ROMs from the floppy disk.

7 When the install screen appears, select the following options in sequence when you are prompted to do so:

<e>	to upgrade CP ROMs only
<y>	to start the upgrade
<b>	to upgrade CP ROMs from floppy disk

Follow all screen directions until you have upgraded the CP ROMs.

8 When the CP ROM upgrade is complete, select the option to return to the main menu.

9 At the main menu, select the following options to upgrade the IOP ROMs and follow the screen directions to update the IOP ROMs from the hard disk drive:

<f>	to upgrade IOP ROMs only
<y>	to start the upgrade
<a>	to upgrade IOP ROMs from hard disk drive

Follow the screen directions to complete the IOP ROM upgrade and return to the main menu.

10 Select the following options to quit and reload the system:

<q>	to quit
<yes>	to confirm quit

11 Power cycle the CP card in Core 0 as follows: Press the MAN RST button and then immediately disengage the lock latches and unseat the card from the backplane. Wait 5 seconds, reinsert the CP card, and secure the lock latches.

The system will automatically perform a sysload during which several messages will appear on the system terminal. Verify that the message “SYS702 48” appears on the terminal during the sysload.

12 Perform the following three steps in rapid succession:

- Press and hold the MAN RST button
- Set the MAINT/NORM switch on the CP card in Core 0 to NORM
- Release the MAN RST button

A “HW1534” message from the CPSI (Core1) or SDI port indicates the start of memory synchronization. Within 10 minutes, an “HWI533” message from the CPSI or SDI port indicates that the contents of Core 0 memory is copied to Core 1 memory. Wait until the memory synchronization is complete before continuing.

13 Set the ENB/DIS switches on all CNI cards in Core 0 to ENB.

Completing the upgrade

To complete the field upgrade of the new NT6D66DA/DB CP card, synchronize the disk drives, and verify CPU and CNI status:

1 Check total memory allocation after the upgrade.

LD 10	to load the program

When the header for overlay 10 is displayed, note the value associated with Total Memory. Compare Total Memory before and after the upgrade. Total Memory should be greater after the upgrade.

Exit the program:

********	to exit the program

2 Synchronize the disk drives:

LD 137	to load the overlay

SYNC	to synchronize the disk drives
********	to exit the program

3 Verify CPU redundancy and CNI function:

LD 135	to load the overlay
STAT CPU	to check the status of CPU 0
STAT CNI	to verify function of CNIs in Core 0
TEST CPU	to test CPU 0
SCPU	switch to CPU 0
STAT CPU	to check the status of CPU 1
STAT CNI	to verify function of CNIs in Core 1
TEST CPU	to test CPU 1
SCPU	switch to CPU 1
********	to exit the program

The field upgrade using new 48 MB CP cards is complete.

Procedure 11:
Software Installation Tool

> ***Note:*** This section describes the Software Installation Tool for systems without the NT5D61 IODU/C card. For information on the Software Installation Tool for systems with IODU/C, refer to “Procedure 14: CD-ROM Software Installation Tool” in this document.

Use this procedure to install only the specific items listed here.

The Software Installation Tool is for use with options 51C, 61C, 81, and 81C systems to convert software and system components to a later release, or to upissue within the same release for systems running X11 release 18 and later (option 61C is available with X11 release 19 and later; option 51C is available with X11 release 20 and later).

The Software Installation Tool is comprised of multiple 3.5-inch 4 MB extra high density (ED) disks. Program disks are labeled A1, A2, A3, …; two are used to store the database and are labeled B1 database and B1 backup database. Be sure the correct disk is installed in the drive before performing a procedure.

The options available with the Software Installation Tool are listed below. Additionally, a tools menu is used to update the system time and date and view the hard disk partition size.

— Install the system software

— Install or transfer the customer database

— Upgrade the CP and/or IOP ROMs

System **patches are deleted** when converting to a new X11 software release, or when performing a software upissue. System patches must be removed prior to conversion or data corruption may occur. Software **patches are not deleted** when the same software release is reinstalled in the system.

There are two different procedures in this chapter for installing software and database, and upgrading ROMs. You will perform only one of these procedures, depending upon the type of call processor (CP) card installed in your system.

Depending upon your system call processor card, refer to “Installation on systems with NT6D66 CP cards” on page 275 or “Installation on systems with NT9D19, NT5D10 or NT5D03 CP cards” on page 248. These sections are intended as a guide through the procedure.General reference information can be found in “NT6D66 CP card installation tool reference” on page 283 or “NT9D19, NT9D10 and NT5D03 CP card installation tool reference” on page 259.

Do not turn off the system during the installation process. If you need to quit the installation process, do so from within the Software Installation Tool before powering off the system.

Read this entire procedure before attempting to perform an installation.

General information

The options available with the Software Installation Tool are listed below. Additionally, a tools menu is used to update the system time and date and view the hard disk partition size.

— Install the system software

— Install or transfer the customer database

— Upgrade the CP and/or IOP ROMs

CAUTION

The screens shown in this procedure are examples. They are not intended to exactly represent the displays that will appear for your system, nor do the choices entered represent those you should necessarily choose. Be sure to watch the terminal display, and follow the on-screen instructions.

Pay close attention to the menus when they appear; they display the options available at any given stage.

When you press <CR>, the Software Installation Tool performs system and disk checks to be sure the installation can take place. If there is a problem, the Software Installation Tool stops the process and prints a system message. The message indicates the problem found and any necessary action.

Throughout the process, status messages appear on the TTY display. Shown below are the status messages received after pressing <CR>.

```
> OBTAIN and CHECK SYSTEM CONFIGURATION.
> Validate hard disk partitions.
> Obtain database file names.
> Process the Install Control file.
> Installing for release [X11 release number].
> System Information obtained successfully.

System Date and Time now is:
Saturday 04-01-1995, 15:37:04
```

If the system time and date is not set, a time and date shown is 00-00-0000, 00:00:00. The Software Installation Tool prompts for an update, and it can be entered at this time. Be sure the correct time and date is set before proceeding with the installation. This can be changed at any time with the Tools Menu.

Status summary chart

The summary chart appears for all the installation options. This example is shown when option <b> (all components) is chosen from the main menu.

Note: Your screen may differ from the below example.

INSTALLATION STATUS SUMMARY

Number of disks: 8
Site Identification: <customer ID number>

Option	Selection	Status	Comment
Software	yes		from rel <number> to <number>
Database	yes		
CP-ROM	yes		
IO-ROM	yes		

553-5539

Please enter:
<CR> --> <y> - Yes, start Installation now.
<n> - No, stop Installation. Go back to Main Menu

Enter choice >

The possible values and meanings for each column are defined below.

— Selection

- **yes** indicates the item will be installed.
- **no** indicates the item was not selected, and will not be updated.

— Status

- **quit** indicates the quit option was used, and the process was exited.
- **ok** indicates the selection was installed successfully.
- **error** indicates the installation was not successful. A system message is given when the Software Installation Tool encounters a problem. Follow the actions required by the message.
- **ignore** applies to the CP ROM and IOP ROM upgrade only. This appears when the process was exited when asked to replace a release and issue with the same release and issue.
- **blank** indicates the status is not yet determined if Selection = Yes. If Selection = No, the field remains blank.

— Comment

- **from rel <number> to rel <number>** gives the Source and Target release and issue numbers.

Messages

When the Software Installation Tool encounters a problem, a system message appears on the terminal display. These messages fall into two categories: warning and non-warning.

Warning messages are not critical errors. The Software Installation Tool proceeds with the installation following the appearance of this message. Refer to *X11 input/output guide* for details regarding these messages.

Non-warning messages appear when a critical problem is encountered. The Software Installation Tool stops the process, and an action is recommended. When the action is complete, the Software Installation Tool can be restarted. In some cases, the tool allows you to restart by pressing the carriage return <CR>.

Installation messages (INST) are defined fully in *X11 input/output guide*. Refer to that document for more details.

Installation on systems with NT9D19, NT5D10 or NT5D03 CP cards

These are the exact steps used to perform the conversion required on systems that have NT9D19, NT5D10 or NT5D03 CP cards installed. All the steps begin with the main menu. If more information is needed, refer to “NT9D19, NT9D10 and NT5D03 CP card installation tool reference” on page 259.

The following are the recommended options to choose for certain situations.

— When upissuing software within the same release, adding new software packages, or going to a later X11 release, choose the default option <a>.

— When upgrading to an Option 51C/61C/81 or 81C system, or for a new Option 51C/61C/81 or 81C installation, choose option <b>.

— When a specific component is required, choose options <c>, <d>, <e>, <f>, or <g>.

Note: When installing new software, it is always recommended to upgrade the ROMs as well.

When the procedure is complete, the Software Installation Tool does not automatically restart. You will be prompted that the process is complete and you may choose another option if necessary. Quitting the process automatically restarts the system. Do *not* press the RST button on either side.

Note: Be sure to install new system software and upgrade ROMs on *both* cores.

Main menu

Before the Software Installation Tool is activated, verify that the system is in split mode and a terminal is connected to the CPSI port (J25) in the inactive Core.

To activate the Software Installation Tool, insert disk A1 from the software package into the inactive CMDU or IOP/CMDU. Press the MAN RST button on the NT9D19 CP Card in the same Core.

Throughout the installation, the option to stop and return to the main menu is always available. The main menu shows all the available options.

```
 NT Meridian - 1  Software/Database/PEROM INSTALL Tool  (Version)

                    M A I N   M E N U

            This tool will install or upgrade your Meridian-1 System
            Software, Database and PE-ROM (both CP and IOP ROM). You will be
            prompted throughout the installation and given the opportunity
            to Quit at any time.

            Please enter:

<CR>-->     <a> - To install Software, CP-BOOT ROM, IOP-ROM.

            <b> - To install Software, Database, CP-BOOT ROM, IOP-ROM.

            <c> - To install Software only.

            <d> - To install Database only.

            <e> - To install CP-BOOT ROM only.

            <f> - To install IOP-ROM only.

            <g> - To reinstall CP-software.

            <t> - To go to the Tools Menu.

            <q> - Quit.

            Enter choice >
```

Splitting the Cores

Use the following procedure to place the system in split mode and transfer call processing to Core 0.

Note: This procedure is not applicable to the option 51C.

1 If Core 1 is active, switch Cores:

STAT CPU	to get the status of the Cores
SCPU	to switch to Core 0 (if necessary)
********	to exit the program

2 In Core 0, set the NORM/MAINT faceplate switch on the CP card to MAINT.

3 In Core 1, set the ENB/DIS switch on all NT6D65 CNI cards to DIS.

4 In Core 1, set the NORM/MAINT faceplate switch on the CP card to MAINT.

5 Press the MAN RST button on the CP card in Core 1.

The system is now operating in split mode.

Installing software, database, and ROMs

Use this procedure when upgrading to an option 51C, 61C, 81, or 81C, or for a new option 51C, 61C, 81, 81C installation.

> ***Note:*** For dual-CPU systems, verify that the system is operating in split mode before activating the Software Installation Tool.

Enter the following commands to install the software, database, and ROM requirements for your system.

1 From the main menu, select the following:

<b>	to install all components
<y>	to confirm that you want to install all the components
<a>	to start the upgrade

Follow the screen directions requiring disk insertion. A number of disks will be requested. After the software has been copied from the floppies to the hard disk, the software on the flash ROM will be updated with this new software. When everything except the database has been installed, the database installation menu appears. The system database can be installed from the B1 database disk, or from an existing backup disk.

2 From the menu select the following:

<a>	to install the default database from the B1 disk
OR	
<b>	to install the database from an existing backup disk
<y>	to begin the installation

3 Following the database installation, install the CP and IOP ROMs. From the menu select the following:

> **CAUTION**
> If a previous attempt to install software on the CP flash ROMs was not successful, do not update the CP-BOOT ROMs; resolve any problem with CP flash ROM updating before attempting to update the CP-BOOT ROMs.

For CP-BOOT ROM:

<a>	to install CP-BOOT ROM only
<y>	to start installation

Follow screen directions until the menu returns.

For IOP ROM:

<a>	to install IOP ROM only
<y>	to start installation

Follow screen directions until the menu returns.

4 Remove the disk from the CMDU or IOP/CMDU.

5 Quit and reload the system. From the main menu, select

<q>	to quit
<y>	to confirm quit
<a>	to reboot the system

6 Repeat this procedure for the second core.

Installing software and ROMs

Use this procedure when going to a later X11 release, adding software packages, or for a software upissue.

> ***Note:*** For dual-CPU systems, verify that the system is operating in split mode before activating the Software Installation Tool.

Enter the following commands to install the software and update ROMs for your system.

1 From the main menu, select the following:

<a>	to install software, CP-BOOT ROM and IOP ROM
<y>	to confirm that you want to install all the components
<a>	to start the upgrade

2 Follow the screen directions requiring disk insertion. A number of disks will be requested.

3 After the software has been copied from the floppies to the hard disk, the software on the flash ROM will be updated with this new software. Following the software installation, install the CP and IOP ROMs. From the menu select the following:

CAUTION

If a previous attempt to install software on the CP flash ROMs was not successful, do not update the CP-BOOT ROMs; resolve any problem with CP flash ROM updating before attempting to update the CP-BOOT ROMs.

For CP-BOOT ROM:

<a>	to install CP-BOOT ROM only
<y>	to start installation

Follow screen directions until the menu returns.

For IOP ROM:

<a>	to install IOP ROM only
<y>	to start installation

Follow screen directions until the menu returns.

4 Remove the disk from the CMDU or IOP/CMDU.

5 Quit and reload the system. From the main menu, select

<q>	to quit
<y>	to confirm quit
<a>	to reboot the system

6 Repeat this procedure for the second core.

Installing software only

Note: For dual-CPU systems, verify that the system is operating in split mode before activating the Software Installation Tool.

Choose the following options to install the software and update the flash ROM for your system.

1 Beginning with the main menu, select the following:

<c>	to install software
<y>	to confirm that you want to install all the components
<a>	to start the upgrade

Follow the screen directions requiring disk insertion. A number of disks will be requested. Following the software installation, quit and reboot the system.

2 From the menu select the following options:

<c>	to install software on the flash ROMs
<y>	to begin the installation

3 Press <CR> to return to the main menu.

4 Upon successful installation of software on the flash ROMs, choose option <e> from the main menu to update the CP-BOOT ROM.

5 Repeat this procedure for the second core.

Installing database only

Note: For dual-CPU systems, verify that the system is operating in split mode before activating the Software Installation Tool.

The system database can be installed from the B1 database disk or from an existing backup disk. Remove the “A” disk and insert the database disk now.

Note: This procedure pertains to database *installation* only. Database *transfer* from a previous system disk is discussed on page 257.

Enter the following commands to install the software, database and ROM requirements for your system.

1 From the main menu, select the following:

<d>	to install the database
<a>	to install the default database from the B1 disk
OR	
<b>	to install the database from an existing backup disk
<y>	to begin the installation

Follow the screen directions requiring disk insertion.

2 Press <CR> to return to the main menu.

3 Repeat this procedure for the second core.

Installing ROMs only

Note: For dual-CPU systems, verify that the system is operating in split mode before activating the Software Installation Tool.

The CP-BOOT ROM and IOP ROM are installed individually. To be sure you install the required IOP ROM version, install it from the floppy disk.

CAUTION

If a previous attempt to install software on the CP flash ROMs was not successful, do not update the CP-BOOT ROMs; resolve any problem with CP flash ROM updating before attempting to update the CP-BOOT ROMs.

1 From the main menu select the following:

For CP-BOOT ROM:

<e>	to install CP-BOOT ROM only
<y>	to start installation
<a>	to confirm

For IOP ROM:

<f>	to install IOP ROM only
<y>	to start installation
<b>	to install IOP ROM from floppy

2 Press <CR> to return to the main menu.

Updating flash ROM with CP software

Note: For dual-CPU systems, verify that the system is operating in split mode before activating the Software Installation Tool.

The CP flash ROM is installed individually. The flash ROM is updated with system software from the hard disk.

1 From the main menu select the following:

For CP-BOOT ROM:

<g>	to update flash ROMs from the hard disk
<y>	to confirm installation

2 Press <CR> to return to the main menu.

3 Upon successful installation of software on the flash ROMs, choose option <e> to update the CP-BOOT ROM.

4 Repeat this procedure for the second core.

Transferring a database from a previous system

Note: For dual-CPU systems, verify that the system is operating in split mode before activating the Software Installation Tool.

The option to transfer a database from a previous system type (not an Option 51C, 61C, 81, or 81C) is available under the database install menu (option <d> in the main menu):

1 Insert the B1 disk into the CMDU or IOP/CMDU at this time.

2 From the main menu, select the following:

<d>	to install the database
<c>	to transfer the previous system database
<a>	to transfer the database from the floppy to the hard drive
<y>	to begin the installation
<a>	to confirm the database conversion

Follow screen directions requesting additional disks.

3 Remove the disk from CMDU or IOP/CMDU.

4 Press <CR> to return to the main menu.

Quitting

Throughout the installation process, the option to quit is always available. When you choose to quit, the system will reload. Be sure there are no disks in the floppy disk drive when quitting.

1 Remove the disk from CMDU or IOP/CMDU.

2 Quit and reload the system. From the main menu, select

<q>	to quit
<y>	to confirm quit
<a>	to reboot the system

NT9D19, NT9D10 and NT5D03 CP card installation tool reference

The following information is intended as general reference information for the Software Installation Tool for systems equipped with NT9D19, NT5D10 or NT5D03 CP cards. For specific installation procedures, use the procedures above.

Installing system software

System software is installed when you choose <a>, <b>, or <c> on the terminal screen. Software is copied from each floppy disk, in sequence, and written to the hard disk drive in the CMDU or IOP/CMDU.

When you have confirmed the installation, the following screen appears:

```
 NT Meridian - 1  Software/Database/PEROM INSTALL Tool  (Version)

You have chosen to UPGRADE your system from

Release: <number> to Release <number>.

This will erase all old system files. Database files will NOT be erased. You may Continue with
Software installation or Quit now and leave your system unchanged.

Note: ERASED FILES CANNOT BE RECOVERED.

Please enter:

<CR> -->            <a> - Continue with Upgrade.

                    <q> - Quit.

Enter choice >
```

If you choose to continue with the software installation, the Software Installation Tool begins the upgrade. When required, the tool prompts for the next required disk. For a sample, see the following figure.

```
Enter choice > a

> Starting Software Install

> Upgrading from release <number> to release <number>

> Initialize volume “/p”

> Create Directories

> Create directory “/p/etc”

> Create directory “/p/hidir

> Copy from “f0/p/os/diskos” to “/p/os/diskos”

> Copy from “f0/p/disk.sys” to “/p/disk.sys”

      NT Meridian - 1  Software/Database/PEROM INSTALL Tool  (Version)

Please insert disk [2] into the floppy drive.

Please enter:

<CR> -->          <a> - Disk [2] is now in the floppy drive.

                        Continue with installation.

                  <q> - Quit.

Enter Choice >
```

The tool responds in the same manner throughout the procedure. If the incorrect disk is inserted, or the disk is not inserted completely, a system message appears. Insert (or reinsert) the correct disk and press <CR> to continue with the upgrade.

After system software has been installed on the hard disk from floppy disks, you will be given the option to update the flash ROM. Choose option <a>. The system software will then be written to flash ROM:

CAUTION

Always choose option <a> to update flash ROM. If you do not update flash ROM, the new system software will not be written to flash ROM and the system will continue to run under the old system software.

```
                    Enter Choice>

                    >Copy from “/f0/disk0009.dat” to “/p/install/disk0009.dat”
                    >Append from “/f0/p/data/errlang1.msg” to “/p/data/errlang1.msg”
                    >Copy from “/f0/p/data/errlang1.idx” to “/p/data/errlang1.idx”
                    >Copy from “/f0/p/etc/debug” to “/p/etc/debug”
                    >Copy from “/f0/p/etc/netstart” to “/p/etc/netstart”
                    >Copy from “/f0/p/etc/nosl1” to “/p/etc/nosl1”
                    >Copy from “/f0/p/etc/tools” to “/p/etc/tools”

 NT Meridian - 1  Software/Database/PEROM INSTALL Tool  (Version)

                    You have chosen to Upgrade CP-software in card slot 14 from
                    the context: xnnnnnn to the context: xnnnnnn.

                    This will replace old CP-software with the ROM image files:
                    “/p/os/flashos, /p/sl1/sl1res, /p/sl1/ovlres, /p/os/flashfs”

                    You may Continue with ROM upgrade or Quit now and leave ROM
                    unchanged.

<CR> –>             <a>  –  Continue with ROM Upgrade.
                    <q>  –  Quit.
```

At this point in the installation, all previously installed system patches have been erased. Contact your technical support for information regarding any new patches that need to be inserted. Patch insertion must be done manually.

When you have successfully installed the components, the following message appears:

```
NT Meridian - 1  Software/Database/PEROM INSTALL Tool  (Version)

Success, the Meridian 1 Software release: <number> was installed successfully on side
<number>.

Diskettes 1 to x were read and all files were copied from floppy disk to the hard disk.
CP-software was installed to flash ROM. If you chose to install Database, Install will ask you to
insert disk x later on.

Please press <CR> when ready…
```

Continuing with the installation takes you either to the next phase in the installation (i.e. database installation, ROM upgrade, etc.), or to the main menu (if you choose to quit).

Installing the customer database

Database installation offers several choices. All these options are available through a display screen.

— Install Option 51C/61C/81 or 81C database from backup floppy disk

— Install a default database from the Installation Tool B1 disk

— Transfer the customer database from a previous system type (not an Option 51C, 61C, 81, or 81C) on 2 MB or 4 MB floppy disk

— Report the version and issue of an existing database on the hard disk drive

— Quit the installation process

CAUTION

Before upgrading the system database, be sure a backup of the previous (source) database is on hand. Should any problems arise, it may be necessary to return to the previous database.

```
NT Meridian - 1  Software/Database/PEROM INSTALL Tool  (Version)

You have chosen to do a Database Installation. You may:

- Install the CUSTOMER Database from a previous backup floppy.

- Install the DEFAULT Database from the installation floppy
     (diskette number x).

- Transfer previous system Database from floppy to the hard disk.

- Check the Database that currently exists on hard disk prior to
   the start of this installation.

Note: If installing the Database from a floppy disk, please
insert the correct disk now.

Please enter:

<CR> -->          <a> - Install CUSTOMER Database.
                        Customer Database backup floppy is now in the drive.

                  <b> - Install DEFAULT Database.
                        Installation floppy disk [x] is now in the drive.

                  <c> - Transfer the previous system Database (DBMT).

                  <d> - Check the Database that exists on the hard disk.

                  <q> - Quit

Enter choice >
```

Choosing <a>, <b>, or <c> will erase the source database files on the hard disk and replace them with the new database files. Option <d> checks the hard disk for an existing database file, and if it exists, reports the version and issue of the database. If a file is missing, a system message appears indicating the missing file. Refer to *X11 input/output guide* for message details.

If you choose option <a> and your are upgrading or installing software only (not changing system type; i.e. from an Option 61C to 81C), you will see this screen:

```
NT Meridian - 1  Software/Database/PEROM INSTALL Tool  (Version)

Enter Choice>  a
>Starting database install
>CONFIG
>Copy from "/f0/config.rec" to "/u/db/config.rec"
>DATA
>Copy from "/f0/database.rec" to "/u/db/database.rec"
>HI
>Copy from “/f0/hi/cp.db” to “/u/db/hi/cp.db”
>Copy from “/f0/hi/hi.db” to “/u/db/hi/hi.db”
>Copy from “/f0/hi/ipb.db” to “/u/db/hi/ipb.db”
>Copy from “/f0/hi/iop.db” to “/u/db/hi/iop.db”
>Copy from “/f0/hi/cnib.db” to “/u/db/hi/cnib.db”
>Copy from “/f0/hi/simm.db” to “/u/db/hi/simm.db”
```

If you are changing machine types (i.e. from an Option 51C, 61C, 81, or 81C to an Option 51C, 61C, 81, or 81C), you will see the following screen. You will be asked to confirm the deleting of HI database files. These files will be replaced by new files. Enter <y> to confirm.

```
 NT Meridian - 1  Software/Database/PEROM INSTALL Tool  (Version)

                        Enter Choice> a
        >Starting database install
        >CONFIG
        >Copy from "/f0/config.rec" to "/u/db/config.rec"
        >DATA
        >Copy from "/f0/database.rec" to "/u/db/database.rec"
        >HI
        An  upgrade  from  machine type 1811 to 1611  has  been detected.
        The  Hardware  Infrastructure (HI)  data  base for the  previous
        system (stored on the hard disk) needs to be erased.

        - "YES" option: HI data base on the hard disk will be erased.
          Default HI data base from new system will be
          used.
        - "NO"  option: HI data base  from the  previous system  will be
          used.

        You may delete the HI data base from the hard disk by choosing
        YES or Continue with Database Install by choosing NO.

        Note: ERASED DATABASE FILES CANNOT BE RECOVERED.

        Please enter:
<CR> ->   <y> - Yes, delete the HI data base files from the hard disk.
          <n> - No, continue copying the previous Database to hard disk.

        Enter Choice>
```

Installing the database from backup or install disk

Choosing option <a> or <b> begins the database installation process. This replaces the customer database with a new database from either a backup or installation floppy. Option <a> requires the backup floppy disk; option <b> requires the B1 installation disk.

The following screen appears:

```
 NT Meridian - 1  Software/Database/PEROM INSTALL Tool  (Version)

You have chosen to install Database from the floppy drive onto the hard disk from Release:
<number> to Release: <number>.

This will overwrite existing database files with new content. If the correct Database disk is not in
the drive, please insert it now.

You may Continue with the Database install or Quit and leave your Database unchanged.

Note: ERASED DATABASE FILES CANNOT BE RECOVERED.

Please enter:

<CR> -->          <a> - Continue with the Database Install.

                  <b> - Quit.

Enter Choice >
```

Transferring a database from a previous system type

Menu option <c> transfers a database from a previous system type (not an Option 51C, 61C, 81, or 81C). This menu option does not change the content of the database, only the file format.

You are now presented with two choices:

— transfer the database from floppy to hard disk

— display version and issue of the database on the disk in the floppy drive

```
NT Meridian - 1  Software/Database/PEROM INSTALL Tool  (Version)

                You are in the Database Media Transfer menu. This operation
                allows you to transfer from a previous system database on the
                floppy disk to the new system on the hard disk. Or you can
                check the version of the database on the floppy disk before you
                do the transferring .

                Please enter:

<CR> -->        <a> - Transfer the database from floppy to hard disk.

                <b> - Display the version and issue of database on floppy drive.

                <q> - Quit

Enter Choice >
```

If you choose option <b>, you will be prompted to insert the B1 disk.

```
NT Meridian - 1  Software/Database/PEROM INSTALL Tool  (Version)

You have chosen to display the version and issue of the Database
on the floppy disk. Please insert the source floppy disk (B1) in
the floppy drive now. The installation tool automatically identifies
2MB or 4MB floppy type.

Please press <CR> when ready…

>Display Database's version and issue

        * MERIDIAN - 1 DATABASE *
```

Version	1211
Issue	1819

```
Press <CR> when ready…
```

Choosing option <a> allows you to transfer a previous database to an Option 51C/61C/81 or 81C database. The disk can be either 2 MB or 4 MB capacity.

```
NT Meridian - 1  Software/Database/PEROM INSTALL Tool  (Version)

You have chosen to transfer the Database from floppy onto the hard disk of side "X". This will
erase the database on the hard disk. If you quit now, the database will be left unchanged.
Please confirm before Install does the transferring.

If you would like to transfer the database, but the floppy disk B1 is not in the drive, please insert
it now.

Please enter:

<CR> -->          <a> - Yes, transfer the database.

                  <q> - Quit.

Enter Choice >
```

Continuing with the installation takes you either to the next phase in the installation (i.e., ROM upgrade, etc.), or to the main menu.

Installing IOP ROMs

Always choose this option whenever the software is upgraded. On dual CPU systems, ROMs should be upgraded on both CPUs.

```
 NT Meridian - 1  Software/Database/PEROM INSTALL Tool  (Version)

        You have chosen to upgrade the IOP ROM in card slot xx from
        the release xx.xx to release xx.xx.

        This will replace old IOP ROM with the ROM image files:
        "/p/os/ioprom".

        You may Continue with ROM upgrade or Quit now and leave ROM
        unchanged.


        Please enter:

<CR> ->  <a> - Continue with IOP ROM Upgrade.

        <q> - Quit.

        Enter Choice >
```

Choose option <a> to upgrade the IOP ROM.

If a message displays indicating that the ROM installation failed, attempt to upgrade the ROMs again by choosing the option again.

Installing CP-BOOT ROMs

This option updates the CP-BOOTROM on the CP card. Always choose this option when installing new system software.

You are now given the choice to program the ROM or quit. Choose option <a> to update the ROM.

```
 NT Meridian - 1  Software/Database/PEROM INSTALL Tool  (Version)

        You have chosen to upgrade the CP-BOOT ROM in card slot xx from
        the context: xnnnnnn to the context: xnnnnnn.

        This will replace old CP-BOOT ROM with the ROM image files:
        "/p/os/cprom".

        You may Continue with ROM upgrade or Quit now and leave ROM
        unchanged.


        Please enter:

<CR> ->  <a> - Continue with CP-BOOT ROM Upgrade.

         <q> - Quit.

         Enter Choice >
```

Continuing will return you to the main menu.

Installing CP software

This option updates the CP flash ROM with CP software from the hard disk.

```
 NT Meridian - 1  Software/Database/PEROM INSTALL Tool  (Version)

        You have chosen to upgrade the CP-software in card slot xx from
        the context: xnnnnnn to the context: xnnnnnn.

        This will replace old CP-software with the ROM image files:
        "/p/os/flashos, /p/sl1/sl1res, /p/sl1/ovlres, /p/os/flashfs".

        You may Continue with ROM upgrade or Quit now and leave ROM
        unchanged.


        Please enter:

<CR> ->  <a> - Continue with ROM Upgrade.

        <q> - Quit.

        Enter Choice >
```

Quitting the Software Installation Tool

Throughout the installation process, the option to quit is always available. When you quit from one of the installation screens (software installation screen, ROM screen, or database installation screen), you are returned to the main menu. When you quit the Installation Tool from the main menu, the system reboots automatically. Be sure any floppy disks are removed from the floppy disk drive **before** you quit the tool and reboot the system.

When you choose Quit from one of the installation screens, the following menu appears.

```
NT Meridian - 1  Software/Database/PEROM INSTALL Tool  (Version)

You have chosen to Quit. Please confirm.

Please enter:

<CR> ->          <y> - Yes, Quit.

                 <n> - No, DO NOT Quit.

Enter Choice >
```

When you choose Quit from the main menu, you are prompted to choose whether to quit the Installation Tool, or return to the main menu.

```
NT Meridian - 1  Software/Database/PEROM INSTALL Tool  (Version)

You have chosen to Quit from Install. Now, you have the option to:

- Reboot the system. If you have any floppy disk in the drive, it will reboot from this floppy. If you
take out the floppy disk, it will reboot from the hard disk.

- Continue loading from where you left off prior to install. If disk 1 is not in the drive now, please
put disk 1 in the drive now.

- Go back to Install's Main Menu.

Please enter:

<CR> ->          <a> - Reboot the system.

                 <b> - Continue loading.

                 <m> - Go back to Main Menu.


Enter Choice >
```

The Tools menu

The Tools menu gives you two options: to set the time and date, or to partition the hard disk.

```
NT Meridian - 1  Software/Database/PEROM INSTALL Tool  (Version)

                          TOOLS MENU

This is the Tools Menu for Install. You can select the tool that is appropriate. Please select one
of the options below.

Please enter:

<CR> ->          <a> - To set the system date and time.

                 <b> - To partition the hard disk.

                 <c> - To display the partition size of the hard disk.

                 <d> - To install CP software at a specific slot.

                 <m> - To go back to Main Menu.

Enter Choice >
```

Time and Date

The Tools menu provides you with a means to set the time and date. It will reset the time and date, if already configured.

Setting the time and date is done with the following menu. When asked to enter the time and date, enter it in the following format. A space or dash can be used to separate the items.

dd mm yyy
hh mm ss
or
dd-mm-yyyy
hh-mm-ss

```
 NT Meridian - 1  Software/Database/PEROM INSTALL Tool  (Version)
```

You have selected the option to set the system date and time. This will change the internal clock of your system to a new date and time.

The system date and time are also used by Install to time-stamp the new files created.

Pressing the carriage-return at the prompt below will leave the system date and time unchanged.

Please enter the new date or time.

Current date is: Thursday 04 - 01 - 1993

Enter new date (dd mm yyyy)? 2 4 1993

Date is set to: Friday 04 - 02 - 1993

Current time is: 12:05:05

Enter new time (hh mm ss)? 13 05 05

Time is set to: 13:05:05

System Date and Time now is:

Friday 04 - 02 - 1993, 13:05:05

Hard disk partition

This tool is available for use by Northern Telecom support personnel only. A password is required to go further with that choice.

Display hard disk partition size

This tool allows you to view the size of the partition on the hard disk. The manufacturer and model number of the hard disk are also displayed.

Install CP software at specific slot

This tool is available for use by Northern Telecom support personnel only. A password is required to go further with that choice.

Installation on systems with NT6D66 CP cards

These are the exact steps used to perform the conversion required on systems that have NT6D66 CP cards installed. All the steps begin with the main menu. If more information is needed, refer to “NT6D66 CP card installation tool reference” on page 283.

The following are the recommended options to choose for certain situations.

— When upissuing software within the same release, adding new software packages, or going to a later X11 release, choose the default option <a> from the main menu to install software, CP-ROM and IOP-ROM.

— When upgrading to an Option 51C/61C/81 or 81C system, or for a new Option 51C/61C/81 or 81C installation, choose option <b> from the main menu to install software, database, CP-ROM, and IOP-ROM.

— When a specific component is required, choose the following options from the main menu:

- <c> for software only
- <d> for database only
- <e> for CP-ROM only
- <f> for IOP-ROM only

Note: When installing new software, it is always recommended to upgrade the ROMs as well.

When the procedure is complete, the Software Installation Tool does not automatically restart. You will be prompted that the process is complete and you may choose another option if necessary. Quitting the process automatically restarts the system. Do *not* press the RST button on either side.

When upissuing software (choosing option <a>), install the software and ROMs on one core only. The second core requires IOP-ROM and CP-ROM installation only. Synchronizing the disks places the new software on both Cores.

Main menu

Before the Software Installation Tool is activated, verify that the system is in split mode (not applicable for option 51C) and that a terminal is connected to CPSI port J25 on the I/O panel (in the inactive Core for dual CPU systems). Option 51C systems will be taken out of service.

To activate the Software Installation Tool, insert disk A1 from the software package into the inactive CMDU or IOP/CMDU. Press the MAN RST button on the NT6D66 CP Card in the same Core.

Throughout the installation, the option to stop and return to the main menu is always available. The main menu shows all the available options.

```
 NT Meridian - 1  Software/Database/PEROM INSTALL Tool  (Version)

MAIN MENU

This tool will install or upgrade your Meridian - 1 System Software, Database and PE-ROM
(both CP-ROM and IOP-ROM). You will be prompted throughout the installation and given the
opportunity to Quit at any time.

Please enter:

<CR>-->          <a> - To install Software, CP-ROM, IOP-ROM.

                 <b> - To install Software, Database, CP-ROM, IOP-ROM.

                 <c> - To install Software only.

                 <d> - To install Database only.

                 <e> - To install CP-ROM only.

                 < f> - To install IOP-ROM only.

                 <g> - To go to the Tools Menu.

                 <q> - Quit.

Enter choice >
```

Splitting the Cores

Use the following procedure to place the system in split mode and transfer call processing to Core 0.

Note: This procedure is not applicable to the option 51C.

1 If Core 1 is active, switch Cores:

STAT CPU	to get the status of the Cores
SCPU	to switch to Core 0 (if necessary)
********	to exit the program

2 In Core 0, set the NORM/MAINT faceplate switch on the CP card to MAINT.

3 In Core 1, set the ENB/DIS switch on all NT6D65 CNI cards to DIS.

4 In Core 1, set the NORM/MAINT faceplate switch on the CP card to MAINT.

5 Press the MAN RST button on the CP card in Core 1.

The system is now operating in split mode.

Installing software, database, and ROMs

Use this procedure when upgrading to an option 51C, 61C, 81, or 81C, or when installing a new option 51C, 61C, 81 or 81C system.

Note: For dual-CPU systems, verify that the system is operating in split mode before activating the Software Installation Tool.

1 From the main menu, select the following:

<b>	to install all components
<y>	to confirm that you want to install all the components
<a>	to start the upgrade

Follow the screen directions requiring disk insertion. A number of disks will be requested. When everything except the database has been installed, the database installation menu appears. The system database can be installed from the B1 database disk, or from an existing backup disk.

2 From the menu select the following:

<a>	to install the default database from the B1 disk
OR	
<b>	to install the database from an existing backup disk
<y>	to begin the installation

3 Following the database installation, install the CP and IOP ROMs. From the menu select the following:

For CP ROM:

<a>	to install CP ROM
<y>	to start installation

Follow screen directions until main menu returns.

For IOP ROM:

<a>	to install IOP ROM
<y>	to start installation

Follow screen directions until main menu returns.

4 Remove the disk from the CMDU or IOP/CMDU.

5 Quit and reload the system. From the main menu, select

<q>	to quit
<y>	to confirm quit
<a>	to reboot the system

6 Repeat this procedure for the second core.

Installing software and ROMs

Use this procedure when preforming a software upissue, adding new software packages, or going to a later X11 release.

> ***Note:*** For dual-CPU systems, verify that the system is operating in split mode before activating the Software Installation Tool.

Enter the following commands to install the software and update ROMs for your system.

1 From the main menu, select the following:

<a>	to install software, CP and IOP ROMs
<y>	to confirm that you want to install all the components
<a>	to start the upgrade

2 Follow the screen directions requiring disk insertion. A number of disks will be requested. Following the software installation, install the CP and IOP ROMs. From the menu select the following:

For CP ROM:

<a>	to install CP ROM
<y>	to start installation

Follow screen directions until main menu returns.

For IOP ROM:

<a>	to install IOP ROM
<y>	to start installation

Follow screen directions until main menu returns.

3 Remove the disk from the CMDU or IOP/CMDU.

4 Quit and reload the system. From the main menu, select

<q>	to quit
<y>	to confirm quit
<a>	to reboot the system

5 Repeat this procedure for the second core.

Installing software only

Note: For dual-CPU systems, verify that the system is operating in split mode before activating the Software Installation Tool.

Choose the following options to install the software.

1 Beginning with the main menu, select the following:

<c>	to install software
<y>	to confirm that you want to install all the components
<a>	to start the upgrade

Follow the screen directions requiring disk insertion. A number of disks will be requested. Following the software installation, quit and reboot the system.

2 Press <CR> to return to the main menu.

3 Repeat this procedure for the second core.

Installing database only

Note: For dual-CPU systems, verify that the system is operating in split mode before activating the Software Installation Tool.

The system database can be installed from the B1 database disk or from an existing backup disk. Remove the “A” disk and insert the database disk now.

Note: This pertains to database installation only. Database transfer from a previous system disk is discussed later in this chapter.

Enter the following commands to install the software, database and ROM requirements for your system.

1 From the main menu, select the following:

<d>	to install the default database
<a>	to install the database from the B1 disk
OR	
<b>	to install the database from an existing backup disk
<y>	to begin the installation

Follow the screen directions requiring disk insertion. Following the database installation, quit and reboot the system.

2 Press <CR> to return to the main menu.

3 Repeat this procedure for the second core.

Installing ROMs only

Note: For dual-CPU systems, verify that the system is operating in split mode before activating the Software Installation Tool.

The CP and IOP ROMs are installed individually. To be sure you install the required ROM version, install it from the floppy disk.

1 From the main menu select the following:

For CP ROM:

<e>	to install CP ROM only
<y>	to start installation
<b>	to install CP ROM from floppy disk

Follow screen directions until main menu returns.

For IOP ROM:

<f>	to install IOP ROM only
<y>	to start installation
< b>	to install IOP ROM from floppy

Follow screen directions requesting additional disks.

2 Press <CR> to return to the main menu.

3 Repeat this procedure for the second core.

Transferring a database from a previous system

Note: For dual-CPU systems, verify that the system is operating in split mode before activating the Software Installation Tool.

Menu option <c> transfers a database from a previous system type (not an Option 51C, 61C, 81, or 81C). The B1 disk must be in the CMDU or IOP/CMDU at this time.

1 From the main menu, select the following:

<d>	to install the database
<c>	to transfer the previous system database
<a>	to transfer the database from the floppy to the hard drive
<y>	to begin the installation
<a>	to confirm the database conversion

Follow screen directions requesting additional disks.

2 Remove the disk from CMDU or IOP/CMDU.

3 Press <CR> to return to the main menu.

Quitting

Note: For dual-CPU systems, verify that the system is operating in split mode before activating the Software Installation Tool.

Throughout the installation process, the option to quit is always available. When you choose to quit, the system will reload. Be sure there are no disks in the floppy disk drive when quitting.

1 Remove the disk from CMDU or IOP/CMDU.

2 Quit and reload the system. From the main menu, select

<q>	to quit
<y>	to confirm quit
<a>	to reboot the system

NT6D66 CP card installation tool reference

The following information is intended as general reference information for the Software Installation Tool for systems equipped with NT6D66 CP cards. For specific installation procedures, use the procedures above.

Installing system software

System software is installed when you choose <a>, <b>, or <c> from the main menu. Software is copied from each floppy disk, in sequence, and written to the hard disk drive in the CMDU or IOP/CMDU.

When you have confirmed the installation, the following screen appears:

```
 NT Meridian - 1  Software/Database/PEROM INSTALL Tool  (Version)

You have chosen to UPGRADE your system from

Release: <number> to Release <number>.

This will erase all old system files. Database files will NOT be erased. You may Continue with
Software installation or Quit now and leave your system unchanged.

Note: ERASED FILES CANNOT BE RECOVERED.

Please enter:

<CR> -->            <a> - Continue with Upgrade.

                    <b> - Quit.

Enter choice >
```

If you choose to continue with the software installation, the Software Installation Tool begins the upgrade. When required, the tool prompts for the next required disk. For a sample, see the following figure.

```
Enter choice > a

> Starting Software Install

> Upgrading from release <number> to release <number>

> Initialize volume “/p”

> Create Directories

> Create directory “/p/etc”
```

```
> Create directory "/p/hidir

> Copy from "f0/p/os/diskos" to "/p/os/diskos"

> Copy from "f0/p/disk.sys" to "/p/disk.sys"

        NT Meridian - 1  Software/Database/PEROM INSTALL Tool  (Version)

Please insert disk [2] into the floppy drive.

Please enter:

<CR> -->          <a> - Disk [2] is now in the floppy drive.

                        Continue with installation.

                  <q> - Quit.

Enter Choice >
```

The tool responds in the same manner throughout the procedure. If the incorrect disk is inserted, or the disk is not inserted completely, a system message appears. Insert (or reinsert) the correct disk and press <CR> to continue with the upgrade.

At this point in the installation, all previously installed system patches have been erased. Contact your technical support for information regarding any new patches that need to be inserted. Patch insertion must be done manually.

When you have successfully installed the components, the following message appears:

```
        NT Meridian - 1  Software/Database/PEROM INSTALL Tool  (Version)

Success, the Meridian 1 Software release: <number> was installed successfully on side
<number>.

Diskette 1 to x were read and all files were copied from floppy disk to the hard disk. If you chose
to install Database, Install will ask you to insert disk x later on.

Please press <CR> when ready…
```

Continuing with the installation takes you either to the next phase in the installation (i.e. database installation, ROM upgrade, etc.), or to the main menu (if you choose to quit).

Installing the customer database

Database installation offers several choices. All these options are available through a display screen.

— Install Option 51C/61C/81 or 81C database from backup floppy disk

— Install a default database from the Installation Tool B1 disk

— Transfer the customer database from a previous system type (not an Option 51C, 61C, 81, or 81C) on 2 MB or 4 MB floppy disk

— Report the version and issue of an existing database on the hard disk drive

— Quit the installation process

CAUTION

Before upgrading the system database, be sure a backup of the previous (source) database is on hand. Should any problems arise, it may be necessary to return to the previous database.

```
NT Meridian - 1  Software/Database/PEROM INSTALL Tool  (Version)

You have chosen to do a Database Installation. You may:

- Install the CUSTOMER Database from a previous backup floppy.

- Install the DEFAULT Database from the installation floppy
     (diskette number x).

- Transfer previous system Database from floppy to the hard disk.

- Check the Database that currently exists on hard disk prior to
   the start of this installation.

Note: If installing the Database from a floppy disk, please
insert the correct disk now.

Please enter:

<CR> -->          <a> - Install CUSTOMER Database.
                        Customer Database backup floppy is now in the drive.

                  <b> - Install DEFAULT Database.
                        Installation floppy disk [x] is now in the drive.

                  <c> - Transfer the previous system Database (DBMT).

                  <d> - Check the Database that exists on the hard disk.

                  <q> - Quit

Enter choice >
```

Choosing <a>, <b>, or <c> will erase the source database files on the hard disk and replace them with the new database files. Option <d> checks the hard disk for an existing database file, and if it exists, reports the version and issue of the database. If a file is missing, a system message appears indicating the missing file. Refer to *X11 input/output guide* for message details.

If you choose option <a> and your are upgrading or installing software only (not changing system type; i.e. from an Option 61C to 81C), you will see this screen:

```
NT Meridian - 1  Software/Database/PEROM INSTALL Tool  (Version)

Enter Choice>  a
>Starting database install
>CONFIG
>Copy from "/f0/config.rec" to "/u/db/config.rec"
>DATA
>Copy from "/f0/database.rec" to "/u/db/database.rec"
>HI
>Copy from “/f0/hi/cp.db” to “/u/db/hi/cp.db”
>Copy from “/f0/hi/hi.db” to “/u/db/hi/hi.db”
>Copy from “/f0/hi/ipb.db” to “/u/db/hi/ipb.db”
>Copy from “/f0/hi/iop.db” to “/u/db/hi/iop.db”
>Copy from “/f0/hi/cnib.db” to “/u/db/hi/cnib.db”
>Copy from “/f0/hi/simm.db” to “/u/db/hi/simm.db”
```

If you are changing machine types (i.e. from an Option 51C, 61C, 81, or 81C to an Option 51C, 61C, 81, or 81C), you will see the following screen. You will be asked to confirm the deleting of HI database files. These files will be replaced by new files. Enter <y> to confirm.

```
 NT Meridian - 1  Software/Database/PEROM INSTALL Tool  (Version)

                        Enter Choice> a
        >Starting database install
        >CONFIG
        >Copy from "/f0/config.rec" to "/u/db/config.rec"
        >DATA
        >Copy from "/f0/database.rec" to "/u/db/database.rec"
        >HI
        An  upgrade  from  machine type 1811 to 1611  has  been detected.
        The  Hardware  Infrastructure (HI)  data  base for the  previous
        system (stored on the hard disk) needs to be erased.

        - "YES" option: HI data base on the hard disk will be erased.
          Default HI data base from new system will be
          used.
        - "NO" option: HI data base from the previous system will be
          used.

        You may delete the HI data base from the hard disk by choosing
        YES or Continue with Database Install by choosing NO.

        Note: ERASED DATABASE FILES CANNOT BE RECOVERED.

        Please enter:
<CR> ->   <y> - Yes, delete the HI data base files from the hard disk.
          <n> - No, continue copying the previous Database to hard disk.

        Enter Choice>
```

Installing the database from backup or install disk

Choosing option <a> or <b> begins the database installation process. This replaces the customer database with a new database from either a backup or installation floppy. Option <a> requires the backup floppy disk; option <b> requires the B1 installation disk.

The following screen appears:

```
 NT Meridian - 1  Software/Database/PEROM INSTALL Tool  (Version)

You have chosen to install Database from the floppy drive onto the hard disk from Release:
<number> to Release: <number>.

This will overwrite existing database files with new content. If the correct Database disk is not in
the drive, please insert it now.

You may Continue with the Database install or Quit and leave your Database unchanged.

Note: ERASED DATABASE FILES CANNOT BE RECOVERED.

Please enter:

<CR> -->          <a> - Continue with the Database Install.

                  <b> - Quit.

Enter Choice >
```

Transferring a database from a previous system type

Menu option <c> transfers a database from a previous system type (not an Option 51C, 61C, 81, or 81C). This menu option does not change the content of the database, only the file format.

You are now presented with two choices:

— transfer the database from floppy to hard disk

— display version and issue of the database on the disk in the floppy drive

```
NT Meridian - 1  Software/Database/PEROM INSTALL Tool  (Version)

                You are in the Database Media Transfer menu. This operation
                allows you to transfer from a previous system database on the
                floppy disk to the new system on the hard disk. Or you can
                check the version of the database on the floppy disk before you
                do the transferring .

                Please enter:

<CR> -->        <a> - Transfer the database from floppy to hard disk.

                <b> - Display the version and issue of database on floppy drive.

                <q> - Quit

Enter Choice >
```

If you choose option <b>, you will be prompted to insert the B1 disk.

```
NT Meridian - 1  Software/Database/PEROM INSTALL Tool  (Version)

You have chosen to display the version and issue of the Database
on the floppy disk. Please insert the source floppy disk (B1) in
the floppy drive now. The installation tool automatically identifies
2MB or 4MB floppy type.

Please press <CR> when ready…

>Display Database's version and issue

        * MERIDIAN - 1 DATABASE *
```

Version	1211
Issue	1819

```
Press <CR> when ready…
```

Choosing option <a> allows you to transfer a previous database to an Option 51C/61C/81 or 81C database. The disk can be either 2 MB or 4 MB capacity.

```
NT Meridian - 1  Software/Database/PEROM INSTALL Tool  (Version)

You have chosen to transfer the Database from floppy onto the hard disk of side 0. This will
erase the database on the hard disk. If you quit now, the database will be left unchanged.
Please confirm before Install does the transferring.

If you would like to transfer the database, but the floppy disk B1 is not in the drive, please insert
it now.

Please enter:

<CR> -->          <a> - Yes, transfer the database.

                  <q> - Quit.

Enter Choice >
```

Continuing with the installation takes you either to the next phase in the installation (i.e., ROM upgrade, etc.), or to the main menu.

Installing IOP ROMs

Always choose this option whenever the software is upgraded. On dual CPU systems, ROMs should be upgraded on both CPUs.

```
NT Meridian - 1  Software/Database/PEROM INSTALL Tool  (Version)

You have chosen to install IOP-ROM. However, there are two sources the IOP-ROM can be
installed from:

- Hard disk. ROM image file from the hard disk will be installed

- Floppy disk. ROM image file from the floppy disk will be installed

Please make a selection of which source of the ROM image file you would like to install.

Please enter:

<a> - Install IOP-ROM from the hard disk (Current rel. iss: xx.xx).

<b> - Install IOP-ROM from the floppy disk.

<q> - Quit.

Enter Choice >
```

Choose option <a> (upgrade the ROMs from the hard disk) if you have just installed new system software.

Choose option <b> (upgrade the ROMs from floppy disk) if the software was not recently installed, or the ROM upgrade is being done on the second CPU following a parallel reload.

If a message displays indicating that the ROM installation failed, attempt to upgrade the ROMs again by choosing the option again.

Installing CP ROMs

It is recommended that the ROM information be upgraded whenever the software is upgraded. On dual CPU systems, ROMs should be upgraded on both CPUs.

The CP ROM menu is shown here; the IOP ROM menu is similar.

```
 NT Meridian - 1  Software/Database/PEROM INSTALL Tool  (Version)

You have chosen to install CP-ROM. However, there are two sources the CP-ROM can be
installed from:

- Hard disk. ROM image file from the hard disk will be installed

- Floppy disk. ROM image file from the floppy disk will be installed

Please make a selection of which source of the ROM image file you would like to install.

Please enter:

<a> - Install CP-ROM from the hard disk (context xnnnnnn).

<b> - Install CP-ROM from the floppy disk.

<q> - Quit.

Enter Choice >
```

Choose option <a> (upgrade the ROMs from the hard disk) if you have just installed new system software.

Choose option <b> (upgrade the ROMs from floppy disk) if the software was not recently installed, or the ROM upgrade is being done on the second CPU following a parallel reload.

If a message displays indicating that the ROM installation failed, attempt to upgrade the ROMs again by choosing the option again.

> ***Note:*** X11 Release 21 changed the CP ROM version format from “rel.iss: xx.xx (e.g., 4.05) to software release/issue or context xnnnnnn (e.g., x112116).

Quitting the Software Installation Tool

Throughout the installation process, the option to quit is always available. When you quit from one of the installation screens (software installation screen, ROM screen, or database installation screen), you are returned to the main menu. When you quit the Installation Tool from the main menu, the system reboots automatically. Be sure any floppy disks are removed from the floppy disk drive **before** you quit the tool and reboot the system.

When you choose Quit from one of the installation screens, the following menu appears.

```
NT Meridian - 1  Software/Database/PEROM INSTALL Tool  (Version)

You have chosen to Quit. Please confirm.

Please enter:

<CR> ->          <y> - Yes, Quit.

                 <n> - No, DO NOT Quit.

Enter Choice >
```

When you choose Quit from the main menu, you are prompted to choose whether to quit the Installation Tool, or return to the main menu.

```
 NT Meridian - 1  Software/Database/PEROM INSTALL Tool  (Version)

You have chosen to Quit from Install. Now, you have the option to:

- Reboot the system. If you have any floppy disk in the drive, it will reboot from this floppy. If you
take out the floppy disk, it will reboot from the hard disk.

- Continue loading from where you left off prior to install. If disk 1 is not in the drive now, please
put disk 1 in the drive now.

- Go back to Install's Main Menu.

Please enter:

<CR> ->          <a> - Reboot the system.

                 <b> - Continue loading.

                 <m> - Go back to Main Menu.


Enter Choice >
```

The Tools menu

The Tools menu gives you two options: to set the time and date, or to partition the hard disk.

```
NT Meridian - 1  Software/Database/PEROM INSTALL Tool  (Version)

                          TOOLS MENU

This is the Tools Menu for Install. You can select the tool that is appropriate. Please select one
of the options below.

Please enter:

<CR> ->          <a> - To set the system date and time.

                 <b> - To partition the hard disk.

                 <c> - To display the partition size of the hard disk.

                 <m> - To go back to Main Menu.


Enter Choice >
```

Time and Date

The Tools menu provides you with a means to set the time and date. It will reset the time and date, if already configured.

Setting the time and date is done with the following menu. When asked to enter the time and date, enter it in the following format. A space or dash can be used to separate the items.

dd mm yyy
hh mm ss
or
dd-mm-yyyy
hh-mm-ss

```
 NT Meridian - 1  Software/Database/PEROM INSTALL Tool  (Version)
```

You have selected the option to set the system date and time. This will change the internal clock of your system to a new date and time.

The system date and time are also used by Install to time-stamp the new files created.

Pressing the carriage-return at the prompt below will leave the system date and time unchanged.

Please enter the new date or time.

Current date is: Saturday 04 - 01 - 1995

Enter new date (dd mm yyyy)? 2 4 1995

Date is set to: Sunday 04 - 02 - 1995

Current time is: 12:05:05

Enter new time (hh mm ss)? 13 05 05

Time is set to: 13:05:05

System Date and Time now is:

Sunday 04 - 02 - 1995, 13:05:05

Hard disk partition

The disk partition tool is available for use by Northern Telecom support personnel only. A password is required to go further with that choice.

Display hard disk partition size

This tool allows you to view the size of the partition on the hard disk. The manufacturer and model number of the hard disk are also displayed.

Procedure 12:
Postconversion procedure

This procedure verifies that the conversion process was successful, and system data converted completely. This is the last part of the total conversion procedure. Perform these steps **after** you have completed all other procedures for your system.

The site data should be printed before and after conversion (see Table 28). If the data has changed, make the necessary updates on the **Target** release, and datadump to the new system media. You must print out the items marked with an asterisk (*) to be sure everything converted properly. All other items on Table 28 are provided if you want to print them.

Check the General Release Bulletin (GRB), and the Conversion notes (earlier in this document) to verify any database updates that need to be made as a result of conversion. Be sure to verify all SYSxxx messages that may appear during the conversion process. These messages may indicate some database updates are required.

CAUTION

Test call processing thoroughly. This may include more testing than is described in this procedure, depending on system configuration. This procedure is intended to show some of the basic tests performed to complete the conversion process.

Note: When parallel reload is complete, the attendant consoles will be in Night mode. If you are performing these procedures during the day, contact the attendant. If these procedures are taking place during the evening, you may not want to perform these call processing steps.

Postconversion steps

1 Print system data listed in Table 28, “Print site data (Part 1 of 2),” on page 306. Verify that all information matches the printouts created before conversions. Make changes if necessary.

2 From any unrestricted telephone, dial the access code for an outside line (usually 9), and dial the listed Directory Number (DN) for the customer. Verify that the correct Incoming Call Indicator (ICI) lights at the attendant console.

3 If the customer is equipped with more than one console, transfer the call to another console.

4 Extend the call to a telephone, and release the call from the console.

5 From the called telephone, transfer the call back to the attendant.

6 Answer and release the call.

7 From any telephone dial the DN for the attendant. Verify that the correct ICI lights at the console, then release the call.

8 Busy-out one trunk group using a Trunk Group Busy (TGB) key on the console.

9 From any telephone with TGAR 0-7, dial the access code of the busied-out trunk group, to verify that the call is intercepted to the console and receives either overflow tone or a recorded announcement.

10 Restore the trunk group to the in-service state using the Trunk Group Busy (TGB) key on the console.

11 During the conversion procedure the Central Office may have busied-out the DID trunks. If DID trunks are equipped, from any unrestricted telephone, dial the access code for an outside line, and dial a DID number into the system.

12 If a private network is used, from any unrestricted telephone, dial the network access code and place a CDP, ESN, BARS/NARS, or ISDN call as applicable to your system.

For system options 51C, 61C, 81, and 81C, go to step 22. System options 21, 51, 61, 71, ST, NT, RT, and XT, use steps 13 through 21.

13 If an MDU or SMDU is present, the **Target** software and converted data must be restored to the hard drive. If you are using the three-disk configuration, you will be prompted to insert the A2 disk. Refer to "Procedure 5: Using a three-disk or four-disk configuration" on page 93 for additional detail.

LD 43
RES Restore software and system data to hard drive
Output reads as follows:
RESTORING DISK A1
DISK A1 RESTORED INSERT DISK A2
You must insert disk A2 before the A1 countdown is complete.
RESTORING DISK B1
RESTORE COMPLETE TOTAL DISKS = 2 (or 3)

14 If Restore is successful, disable and remove the QPC584 MSI or NT9D34 EMSI card from CPU 1 and:

- for QPC584 cards, set position 4 on switch 3 (SW3-4) to ON
- for NT9D34 cards, set position 4 on switch 2 (SW2-4) to ON

Repeat for CPU 0.

15 Enter ******** to exit the overlay.

16 Type **ENLT.** This software enables the QPC584 MSI, NT9D34 EMSI, or QPC742 FDI card.

17 Load LD 35 to test and switch CPUs.

LD 35
TCPU Test CPUs.
SCPU Switch CPUs.
******** To abort overlay.

18 Perform a data dump to two additional copies of the **Target** system media. Put copy 2 of the A1 and B1 disks into the drives, and load LD 43. If an MDU or SMDU is equipped, use the Backup command. If an FDU is equipped, use the datadump command. Repeat for copy 3 of A1 and B1.

LD 43

BKO Back up with an MDU or SMDU.
or
EDD Back up with an FDU.

19 If not done previously, set the time and date. Note that if Call Detail Recording (CDR) is used, system message ERR225 will appear. This is normal.

LD 02
STAD dd mm yyyy hh mm ss

dd = day (for example, 05 for the fifth)
mm = month (for example, 09 for September)
yyyy = year (last 2 or all four digits, for example, 92 or 1992)
hh = hour (in 24-hour time, for example, 13:00 for 1:00 pm)
mm = minute (for example, 25)
ss = seconds (for example, 00)

20 If you have auxiliary processors working with your system, be sure they are powered up. Be sure the Application Module Links (AML) are up. DCH and AML messages may indicate problems during the conversion. Investigate any of these messages.

21 Keep one copy of the **Source** software, as it was backed up in the pre-conversion procedure, in case it becomes necessary to reconvert. After the **Target** software has been running well for a few weeks, return your original software to Northern Telecom through your distribution channel.

For option 51C, 61C, 81, and 81C systems only.

22 Load LD 135 to test and switch CPUs. (Omit this step for option 51C.)

LD 135

TEST CPU	Test CPU.
SCPU	Switch CPUs.
********	To abort overlay.

23 Load LD 137 to get the status of the CMDUs and IOPs.

LD 137	
STAT	Get the status of both CMDUs and IOPs.
********	To abort overlay.

24 Load LD 43 to back up the other set of B1 disks. Insert the B1 disk in the active CMDU.

LD 43

BKO Back up to the backup disks and the active CMDU.

25 If not done previously, set the time and date. Note that if Call Detail Recording (CDR) is used, system message ERR225 will appear. This is normal.

LD 02
STAD dd mm yyyy hh mm ss

dd = day (for example, 05 for the fifth)
mm = month (for example, 09 for September)
yyyy = year (last 2 or all four digits, for example, 92 or 1992)
hh = hour (in 24-hour time, for example, 13:00 for 1:00 pm)
mm = minute (for example, 25)
ss = seconds (for example, 00)

26 If you have auxiliary processors working with your system, be sure they are powered up. Be sure the Application Module Links (AML) are up. DCH and AML messages may indicate problems during the conversion. Investigate any of these messages.

27 Keep one copy of the **Source** software, as it was backed up in the pre-conversion procedure, in case it becomes necessary to reconvert. After the **Target** software has been running well for a few weeks, return your original software to Northern Telecom through your distribution channel.

Items marked with asterisks (*) are required printout for conversion. Other items are recommended for a total system status.

Table 28
Print site data (Part 1 of 2)

Site data	Print command	
Terminal blocks for all TNs	LD 20	
	REQ	PRT
	TYPE	TNB
	CUST	<cr>
Directory Numbers	LD 20 (LD 22 prior to Release 16)	
	REQ	PRT
	TYPE	DNB
	CUST	<cr>
Attendant Console data block for all customers	LD 20	
	REQ	PRT
	TYPE	ATT, 2250
	CUST	<cr>
*Customer data block for all customers	LD 21	
	REQ	PRT
	TYPE	CDB
	CUST	<cr>
Route data block for all customers	LD 21	
	REQ	PRT
	TYPE	RDB
	CUST	Customer number
	ROUT	<cr>
	ACOD	<cr>
*Configuration Record	LD 22	
	REQ	PRT
	TYPE	CFN
*Software Packages	LD 22	
	REQ	PRT
	TYPE	PKG

Table 28
Print site data (Part 2 of 2)

Site data	Print command	
* Software Issue, ROM and tape ID	LD 22	
	REQ	ISS
	REQ	ROM
	REQ	TID
* Peripheral software versions	LD 22	
	REQ	PRT
	TYPE	PSWV
ACD data block for all customers	LD 23	
	REQ	PRT
	TYPE	ACD
	CUST	Customer Number
	ACDN	ACD DN (or <CR>)
Superloop card IDs and software version	LD 32	
(peripheral controller, superloop network and controller cards)	.	IDC loop
Multi-purpose ISDN Signaling Processor (MISP) card	LD 27	
	REQ	PRT
	TYPE	MISP
	LOOP	loop number (0–158)
	APPL	<cr>
	PH	<cr>
DTI/PRI data block for all customers	LD 73	
	REQ	PRT
	TYPE	DDB

Note: Items marked with asterisks (*) are required printout for conversion. Other items are recommended for a total system status.

Procedure 13: Upgrading to a new Call Processor card

CAUTION

Personnel performing this upgrade do so at their own risk. Personnel should have spare CP cards on hand or risk installation delay and/or system down time. Northern Telecom assumes no responsibility for any damage incurred, system down time, or loss due to damage or down time.

This section contains procedures for performing CP card upgrades on Options 51C, 61C, 81, or 81C systems running X11 release 24 or later software.

Note: The procedures in the section can be used for NT9D19, NT5D10, and NT5D03 CP card memory configurations.

Note: There should be an SDI TTY connection at J30, which should remain connected at all times to monitor system status.

Upgrading to a new CP card in Options 61C, 81, or 81C

Use the following instructions if you are converting a system to release 24 and are installing NT9D19, NT5D10 or NT5D03 CP cards.

Installing a new CP card in an Option 61C, 81, or 81C consists of:

— splitting the CPUs

— installing a new CP card in Core 1

— upgrading the system software and CP ROMs on Core 1

— swapping CPUs

— installing a new CP card in Core 0

— upgrading the system software and CP ROMs on Core 0

— synchronizing the hard disks

Performing a data dump

Before starting the upgrade, make a backup copy of the customer database on 2MB diskettes using the data dump routine:

1 Log into the system.

2 Load the Equipment Data Dump Program (LD 43). At the prompt, enter

LD 43	to load the program

3 When “EDD000” appears on the terminal, enter

EDD	to begin the data dump

4 When “DATADUMP COMPLETE” and “DATABASE BACKUP COMPLETE” appear on the terminal, enter

********	to exit the program

CAUTION

If the data dump is not successful, do not continue; contact your technical support organization. A data dump problem must be corrected before proceeding.

Splitting the cores

1 Verify that the disk drives are synchronized:

LD 137	to load the program
STAT	to get the status of the disk drives

If the disks are synchronized, proceed with step 2. If they are not synchronized, execute the SYNC command:

SYNC	to synchronize the drives
********	to exit the program

2 Verify that clock controller 0 is active. If it is not, switch to clock controller 0:

LD 60	to load the program
SSCK 0	to get the status of clock controller 0
SWCK	to switch to clock controller 0 (if necessary)
********	to exit the program

3 Verify that Core 0 is the active Core:

LD 135	to load the program
STAT CPU	to check CPU status
TEST CPU	to test the CPU

If Core 0 is active, proceed with step 5. If Core 0 is not the active CPU, swap Cores and verify again:

SCPU	to swap CPUs
STAT CPU	to check CPU status

4 Verify that CMDU 0 is active. You may need to switch CMDUs.

LD 137	
STAT	Get the status of IODU/C
SWAP	Switch IODU/Cs (if necessary).

5 Set the MAINT/NORM switch on the CP card in Core 0 to MAINT.

6 Set the ENB/DIS switch on all CNI cards in Core 1 to DIS.

7 Perform the following three steps in uninterrupted sequence:

- press and hold the MAN RST button on the CP card in Core 1
- set the MAINT/NORM switch on the CP card in Core 1 to MAINT
- release the MAN RST button

Upgrading Core 1

At this time you will install the new CP card and X11 system software on Core 1 if it is not already installed on the hard drive.

1 Connect a terminal to the CPSI port in Core 1 to J25 of the I/O panel at the back of the core. Be sure it is configured as follows. The recommended baud rate is 9600, to be the same as the CPSI port.

- 7 data bits
- 1 stop bit
- Space parity
- Full duplex
- XON protocol

2 Disengage the lock latches and remove the CP card from Core 1.

3 Insert the CP Install Program diskette which corresponds to the CP card to which you are upgrading into IODU/C 1 (68030, 68040, 68060 or 68060E).

4 Install the CD-ROM disk into the CD-ROM drive on the IODU/C in Core 1. To install the CD-ROM:

- press the button on the CD-ROM drive to open the CD-ROM disk holder
- place the CD-ROM disk into the holder with the disk label showing
- press the button again to close the CD-ROM disk holder (don’t push the holder in by hand)

5 Verify that the MAINT/NORM switch on the new NT9D19, NT5D10 or NT5D03 CP card is set to MAINT.

6 Insert the new CP card in the same slot in Core 1 and secure the lock latches.

A sysload will begin (cold start). Wait for the Main Menu to appear on the terminal before proceeding.

7 Press <CR> to continue.

8 Log into the system and enter the time and date, when prompted.

9 Initiate the database installation by selecting the following command from the menu:

<u> to Install menu

10 Remove the CP Install Program diskette and insert the Keycode diskette, when prompted.

<a> to continue with keycode validation

<y> to confirm that the keycode matches the CD-ROM release

11 When the Install Menu is displayed, select the following options in sequence when you are prompted to do so

<a> to install software, CP-BOOTROM, and IOP-ROM

<a> to verify that the CD-ROM is now in drive

The Installation Status Summary screen appears that lists the options to be installed.

<y> Yes, start the installation

<a> continue with upgrade

When the ROM installation screen appears, select the following prompts in sequence:

<a> to install CP-ROM from hard disk

<a> to continue with ROM upgrade

When all files are copied from the CD-ROM to hard disk, press <CR> to continue.

<a> to install the IOP-ROM from hard disk

<y> Yes, start installation

<a> to continue with ROM upgrade

The Installation Status Summary screen appears. Verify that CD to disk, disk to ROM, CP-BOOTROM, and IOP-ROM were installed.

<cr> press return to return to the Install Menu.

<q> to quit (remove any diskettes from the floppy drive)

<y> Yes, to confirm quit

<a> to reboot the system

The system will automatically perform a sysload during which several messages will appear on the system terminal. Wait for "DONE" and then "INI" messages to be displayed before continuing.

Note: SYS4695 is not an error message. This message is cleared when you perform a data dump.

12 Set the ENB/DIS switches on all CNI cards in Core 1 to ENB.

CAUTION

Disabling CNI cards in Core 0 will momentarily interrupt call processing. Calls established or in process will be dropped. Call processing will resume after the "SYSTEM INI" messages appear on the system terminal (approximately 1 minute).

13 Perform the following three steps in uninterrupted sequence:

- set the DIS/ENB faceplate switch on the IODU/C card in Core 0 to DIS
- set the ENB/DIS switch on all CNI cards in Core 0 to DIS
- press and release the MAN INT button on the CP card in Core 1

After the system initialization has finished (INI messages are no longer displayed on the system terminal), check for dial tone on a telephone set.

14 Following a successful dial tone test, perform the following basic sanity tests:

- Make sure calls can be placed.
- Check for error messages, line noise, chatter, or other problems. Track sources and resolve problems as necessary.

Upgrading Core 0

Once the CP card in Core 1 is upgraded, upgrade the CP card in Core 0 and install system software:

1 Connect a terminal to the CPSI port in Core 0 to J25 of the I/O panel at the back of the core. Be sure it is configured as follows. The recommended baud rate is 9600, to be the same as the CPSI port.

- 7 data bits
- 1 stop bit
- Space parity
- Full duplex
- XON protocol

2 Verify that the MAINT/NORM switch on the CP card in Core 0 is set to MAINT.

3 Verify that the ENB/DIS switches on all CNI cards in Core 0 are set to DIS.

4 Disengage the lock latches and remove the CP card from Core 0.

5 Insert the Install diskette that corresponds with the CP card you will be installing into IODU/C 0.

6 Verify that the MAINT/NORM switch on the new NT9D19, NT5D10 or NT5D03 CP card is set to MAINT.

7 Insert the new CP card in the same slot in Core 0 and secure the lock latches.

The system will perform a sysload and load the IODU/C Software Installation Tool.

8 When the NT Logo Screen appears on the terminal, the Software Installation Tool has loaded. Press **<CR>** to go to the Install Main Menu.

9 Set the system date and time. When prompted to enter the time and date, enter it in the following format. A space or dash can be used to separate the items.

dd mm yyyy
hh mm ss
or
dd-mm-yyyy
hh-mm-ss

10 At the Main menu select **<u>** to go to the Install menu.

11 Insert the Keycode diskette when prompted and select **<a>** to continue with the keycode validation.

Once the keycode is validated against the Security Device, the Install menu is displayed.

12 When the Install menu appears, select the following options in sequence when you are prompted to do so:

<o>	to copy system software from Core 1 to Core 0.
<y>	to start installation
<a>	to continue with upgrade

13 At the Install menu, select the following options to install CP-BOOTROM:

<e>	to install CP-BOOTROM
<y>	to start the upgrade
<a>	to upgrade CP-BOOTROM from the hard disk drive

14 At the Install menu, select the following options to install IOP-ROM:

<f>	to install IOP-ROM
<y>	to start the upgrade
<a>	to upgrade IOP-ROM from the hard disk drive

15 **Remove the diskette** from IODU/C 0.

16 Select the following options to quit and reload the system:

<q>	to quit
<y>	to confirm quit
<a>	to reboot the system

The system will automatically perform a sysload and system initialization during which several messages will appear on the system terminal. Wait until initialization has finished (INI messages are no longer displayed on the system terminal) before continuing.

17 In Core 0, enable the NT6D65 CNI cards by setting the ENB/DIS faceplate switches to ENB.

18 Connect a terminal to the CPSI port in Core 1 to J25 of the I/O panel in the back of the core.

19 In Core 0, perform the following steps in uninterrupted sequence:

- press and release the MAN RST button
- when SYS700 messages appear on CP 0 LCD display, **set the MAINT/NORM switch to NORM**.

Within 60 seconds, the LCD will display the following messages, confirming the process.

RUNNING ROM OS
ENTERING CP VOTE

An “HWI534” message from the CPSI or SDI port indicates the start of memory synchronization. Within 10 minutes, an HWI533 message on Core 1 CPSI or SDI TTY indicates the memory synchronization is taking place. Wait until the memory synchronization is complete before continuing.

20 Set the MAINT/NORM switch on the CP card in Core 1 to NORM.

21 Synchronize the disk drives:

LD 137	to load the overlay
STAT	to get the status of both CMDUs, IOPs and redundancy
SYNC	to synchronize the disk drives

TEST CMDU	Performs hard and floppy disk test.
********	to exit the program

Completing the upgrade

To complete the upgrade, verify CPU and CNI status and perform a data dump.

1 Verify CPU redundancy and CNI function:

LD 135	to load the overlay
STAT CPU	to check the status of the CPU
STAT CNI	to verify function of the CNIs
TEST CPU	to test the CPU
SCPU	switch CPUs
STAT CPU	to check the status of the CPU
STAT CNI	to verify function of the CNIs
TEST CPU	to test the CPU
SCPU	switch to CPUs
********	to exit the program

Backup the customer database on 2MB diskettes.

2 Load the Equipment Data Dump Program (LD 43). At the prompt, enter

LD 43	to load the program

3 When “EDD000” appears on the terminal, enter

EDD	to begin the data dump

4 When “DATADUMP COMPLETE” and “DATABASE BACKUP COMPLETE” appear on the terminal, enter

********	to exit the program

CAUTION

If the data dump is not successful, do not continue; contact your technical support organization. A data dump problem must be corrected before proceeding.

5 Evaluate the number of call registers and telephone buffers that are configured for the system. Refer to *Meridian 1 capacity engineering* (553-3001-149).

The CP card upgrade is complete.

Upgrading to a new CP card in an Option 51C.

> **CAUTION**
> Installing the NT9D19, NT5D10 or NT5D03CP card in the Option 51C will require system downtime. Schedule for this when planning the system upgrade.

Power to the entire column must be shut off to perform this upgrade. This will cause loss of service to the whole telephone system. Plan the upgrade for a time when the impact to the telephone users will be minimal.

Installing an NT9D19, NT5D10 or NT5D03 CP card in an Option 51C system consists of:

— installing a new CP card in the Core module

— upgrading the system software and CP ROMs

Performing a data dump

Before starting the upgrade procedure, make a backup copy of the customer database using the data dump routine:

1 Log into the system.

2 Load the Equipment Data Dump Program (LD 43). At the prompt, enter

LD 43	to load the program

3 When “EDD000” appears on the terminal, enter

EDD	to begin the data dump

4 When “DATADUMP COMPLETE” and “DATABASE BACKUP COMPLETE” appear on the terminal, enter

******** to exit the program

> **CAUTION**
> If the data dump is not successful, do not continue; contact your technical support organization. A data dump problem must be corrected before proceeding.

Installing the new CP card and system software

At this time you will install the new CP card and system software if it is not already installed on the hard drive.

1 Connect a terminal to the CPSI port in the Core module to J25 of the I/O panel at the back of the core. Be sure it is configured as follows. The recommended baud rate is 9600, to be the same as the CPSI port.

- 7 data bits
- 1 stop bit
- Space parity
- Full duplex
- XON protocol

2 Set the NORM/MAINT switch to MAINT, disengage the lock latches and remove the CP card from the Core module.

3 Insert the Install diskette that corresponds to the CP card you will be installing into the IODU/C.

4 Install the CD-ROM disk into the CD-ROM drive. To install the CD-ROM:

- press the button on the CD-ROM drive to open the CD-ROM disk holder
- place the CD-ROM disk into the holder with the disk label showing
- press the button again to close the CD-ROM disk holder (don't push the holder in by hand)

5 Verify that the MAINT/NORM switch on the new NT9D19, NT5D10 or NT5D03 CP card is set to NORM.

6 Verify that the ENB/DIS switch on the CNI card is set to ENB.

7 Insert the new CP card in the same slot in the Core module and secure the lock latches.

The system will automatically load the software install program.

8 When the NT Logo Screen appears on the terminal, the Software Installation Tool has loaded. Press **<CR>** to go to the Install Main Menu.

9 Set the system date and time. When prompted to enter the time and date, enter it in the following format. A space or dash can be used to separate the items.

dd mm yyyy
hh mm ss
or
dd-mm-yyyy
hh-mm-ss

10 At the Main menu select **<u>** to go to the Install menu.

11 Insert the Keycode diskette when prompted and select **<a>** to continue with the keycode validation.

Once the keycode is validated against the Security Device, the Install menu is displayed.

12 When the Install menu appears, select the following options in sequence when you are prompted to do so:

<a>	to install software, CP-BOOT ROM and IOP-ROM
<y>	to start installation
<a>	to continue with the upgrade

13 Following the software installation, install the CP-BOOT and IOP-ROMs. From the menu select the following:

<a>	to continue with ROM upgrade
<a>	to continue with ROM upgrade (CP-BOOT ROM)
<y>	to start installation
<a>	to continue with ROM upgrade (IOP-ROM)

14 **Remove the diskette** from the IODU/C.

15 Select the following options to quit and reload the system:

<q>	to quit
<yes>	to confirm quit
<a>	to reboot the system

The system will automatically perform a sysload and system initialization during which several messages will appear on the system terminal. Wait until initialization has finished (INI messages are no longer displayed on the system terminal) before continuing.

Note: SYS4695 is not an error message. This message is cleared when you perform a data dump.

Note: If you are converting from a software release prior to release 24, the following message appears on the system terminal:

DATA CONVERSION
X11 RELEASE XX.xx TO RELEASE YY.yy

16 Verify that the “DONE” message appears on the system terminal.

Note: The SYSTEM INI message may take 70 seconds or more to appear.

Completing the upgrade

To complete the CP card upgrade, verify CPU and CNI status.

1 Verify CPU and CNI functionality:

LD 135	to load the overlay
STAT CPU	to check the CPU status
STAT CNI	to verify CNI functionality
********	to exit the program

Backup the customer database to 2MB diskettes:

2 Load the Equipment Data Dump Program (LD 43). At the prompt, enter

LD 43	to load the program

3 When “EDD000” appears on the terminal, enter

EDD	to begin the data dump

4 When “DATADUMP COMPLETE” and “DATABASE BACKUP COMPLETE” appear on the terminal, enter

********	to exit the program

CAUTION

If the data dump is not successful, do not continue; contact your technical support organization. A data dump problem must be corrected before proceeding.

5 Evaluate the number of call registers and telephone buffers that are configured for the system. Refer to *Meridian 1 capacity engineering* (553-3001-149).

The CP card upgrade is complete.

Procedure 14:
CD-ROM Software Installation Tool

This chapter details the screen displays and options of the CD-ROM Software Installation Tool (hereafter referred to as “Software Installation Tool”) that is compatible on option 51C, 61C, 81, and 81C systems equipped with the NT5D61 Input/Output Disk Unit with CD-ROM (IODU/C).

This tool is based on the existing Software Installation Tool, but has notable differences in menus as well as new functionality to support installation of software from CD-ROM, copying of system software from Core to Core, copying of database from Core to Core, and Keycode installation.

The IODU/C card no longer uses a Security Cartridge, but instead uses both a Security Device and an electronic **keycode** file. This keycode file is stored on a 2MB diskette and must be inserted into the IODU/C floppy drive and authenticated each time the Software Installation Tool is loaded and the Install Menu is accessed.

On systems equipped with an IODU/C, the database is stored on 2MB diskettes, not 4MB diskettes. A Database Transfer Utility diskette, specific to Call Processor type, is available to convert a 4MB database to a 2MB database. Refer to *NT5D61 IODU/C Reference guide* (P0872703) or *Meridian 1 hardware replacement* (553-3001-520) for procedures on replacing CMDU or IOP/CMDU cards with IODU/C.

The Tools Menu has new options for finding the CD-ROM status (option <g>), printing the Keycode (option <h>), printing information about the Security Device (option <i>), checking the customer-specific CD-ROM data (<j>), manually creating a Keycode diskette (<k>), and archiving the database (<s>).

Do not turn off the system during the installation process. If you need to quit the installation process, do so from within the Software Installation Tool before powering off the system.

Read the entire procedure before attempting to perform an installation.

Before the Software Installation Tool is activated, verify that the system is in split mode (not applicable for option 51C) and that a terminal is connected to CPSI port J25 on the I/O panel (in the inactive Core for dual CPU systems). Option 51C systems will be taken out of service.

To activate the Software Installation Tool, insert the Install diskette specific to your Call Processor type and the CD-ROM containing system software (if you will be installing that component). Press the MAN RST button on the CP card in the same Core.

The IODU/C Software Installation Tool requires the following items:

- 2MB diskettes (used to store, backup, and restore the database)
- an Install diskette specific to the system's Call Processor card
- a Keycode diskette
- a CD-ROM containing system software

Note: If you will be installing system software from CD-ROM (options <a>, <b>, or <c> from the Install Menu), then insert the CD into the CD-ROM drive before loading the Software Installation Tool.

CAUTION

The screens shown in this procedure are examples. They are not intended to exactly represent the displays that will appear for your system, nor do the choices entered represent those you should necessarily choose. Be sure to watch the terminal display, and follow the on-screen instructions.

Pay close attention to the menus when they appear; they display the options available at any given stage.

Status Summary Charts

Status Summary Charts are displayed for the purpose of informing the user about what items will be installed or have been installed. This example is shown when option <b> (all components) is chosen from the Install Menu.

Note: Your screen may differ from the below example.

INSTALLATION STATUS SUMMARY

Option	Choice	Status	Comment
SW: CD to disk	yes		from xxxx to xxxx
SW: disk to ROM	yes		
Database	yes		
CP-BOOTROM	yes		
IOP-ROM	yes		

Please enter:
<CR> -> <y> - Yes, start Installation.
<n> - No, stop Installation. Return to the Main Menu.

Enter Choice> **y**

553-7731

The possible values and meanings for each column are defined below.

— Choice

- **yes** indicates the item will be installed
- **no** indicates the item was not selected, and will not be updated.

— Status

- **quit** indicates the quit option was used, and the process was exited.
- **ok** indicates the choice was installed successfully.
- **error** indicates the installation was not successful. A system message is given when the Software Installation Tool encounters a problem. Follow the actions required by the message.
- **ignore** applies to the CP ROM and IOP-ROM upgrade only. This appears when the process was exited when asked to replace a release and issue with the same release and issue.
- **blank** indicates the status is not yet determined if Choice = Yes. If Choice = No, the field remains blank.

— Comment

- **from rel <number> to rel <number>** gives the Source and Target release and issue numbers.

Messages

When the Software Installation Tool encounters a problem, a system message appears on the terminal display. These messages fall into two categories: warning and non-warning.

Warning messages are not critical errors. The Software Installation Tool proceeds with the installation following the appearance of this message. Refer to *X11 input/output guide* for details regarding these messages.

Non-warning messages appear when a critical problem is encountered. The Software Installation Tool stops the process, and an action is recommended. When the action is complete, the Software Installation Tool can be restarted. In some cases, the tool allows you to restart by pressing the carriage return <CR>.

Installation messages (INST) are defined fully in *X11 input/output guide.* Refer to that document for more details.

Introductory Screen

The first screen that appears after loading the NT5D61 Software Installation Tool is the NT Logo Screen.

This screen is displayed after the user presses <CR> from the NT Logo Screen. From this screen, the user may select option <u> to go to the Install Menu, or <t> to go to the Tools Menu. Alternately, option <q> to quit is available at this screen.

```
        Nortel Meridian - 1  Software/Database/PEROM CDROM INSTALL Tool (x11)
        ═══════════════════════════════════════════════════════════════════
                                   M A I N   M E N U

        The Software Installation Tool will install or upgrade Meridian-1
        System Software, Database and the PE-ROM (both CP and IOP ROM).
        You will be prompted throughout the installation and given the
        opportunity to quit at any time.

        Please enter:
<CR>-->  <u> - To Install menu.
         <t> - To Tools menu.
         <q> - Quit.

         Enter choice > u                                   553-7780
```

Install Menu

Note: A Keycode diskette is required before accessing the Install Menu.

Before the Install Menu screen is displayed, an intermediary screen shown below prompts the user to insert their Keycode diskette for validation against the Security Device.

```
        Nortel Meridian - 1  Software/Database/PEROM CDROM INSTALL Tool (x11)
        ___ ___ ___ ___ ___ ___ ___ ___ ___ ___ ___ ___ ___ ___ ___ ___ ___ ___ ___ ___
        ___ ___ ___ ___ ___ ___ ___ ___ ___ ___ ___ ___ ___ ___ ___ ___ ___ ___ ___ ___

        Please insert the diskette with the keycode file into the floppy
        drive.

        Please enter:
<CR>--> <a> - Continue with the keycode validation
            (the keycode diskette is in the floppy drive).
        <q> - Quit.

        Enter Choice > a                                          553-7729
```

Following successful Keycode validation, the Install Menu screen is displayed, as shown below.

> ***Note:*** If the Software Installation Tool is loaded on a Core equipped with an NT5D61BA IODU/C (which lacks a CD-ROM drive), options <a>, <b>, and <c> will not appear.

```
Nortel Meridian - 1  Software/Database/PEROM CDROM INSTALL Tool (x11)
═══ ═══ ═══ ═══ ═══ ═══ ═══ ═══ ═══ ═══ ═══ ═══ ═══ ═══ ═══ ═══ ═══ ═══ ═══ ═══ ═══ ═══ ═══
                         I N S T A L L   M E N U

The Software Installation Tool will install or upgrade Meridian-1
System Software, Database and the PE-ROM (both CP and IOP ROM).
You will beprompted throughout the installation and given the
opportunity to quit at any time.

Please enter:
<CR>-->  <a> - To install Software, CP-BOOTROM, IOP-ROM.
         <b> - To install Software, Database, CP-BOOTROM, IOP-ROM.
         <c> - To install Software only.
         <d> - To install Database only.
         <e> - To install CP-BOOTROM only.
         <f> - To install IOP-ROM only.
         <g> - To reinstall CP-Software.
         <o> - To copy System Software from the other Core.
         <t> - To go to the Tools menu.
         <k> - To install Keycode only.
               For Feature Expansion, use OVL143.
         <q> - Quit.

                                                   553-7789
         Enter Choice >
```

Each option from the Install Menu is described in the following pages.

Installing Software, CP-BOOTROM, and IOP-ROM

> ***Note:*** For dual-CPU systems, verify that the system is operating in split mode before activating the Software Installation Tool.

This option is selected for the sequential installation of software, CP-BOOTROM, and IOP-ROM. This option differs from option <b> in that the database is not installed. Use option <a> when going to a later X11 release or for a software upissue.

Installing Software, Database, CP-BOOTROM, and IOP-ROM

> ***Note:*** For dual-CPU systems, verify that the system is operating in split mode before activating the Software Installation Tool.

This option is selected when you wish to sequentially install all components - software, database, CP-BOOTROM, and IOP-ROM.

Option <b> is used during the upgrade procedures from NT5D20 IOP/CMDU, NT6D63 IOP and NT6D64 CMDU, NT9D33 SMDU, NTND16 FDU, NT8D69 MDU, and NTND16 MDU cards to NT5D61 IODU/C cards.

Installing Software only

> ***Note:*** For dual-CPU systems, verify that the system is operating in split mode before activating the Software Installation Tool.

This option is selected when you wish to install system software from the CD-ROM to the hard drive. When selecting option <c>, IOP-ROM and CP-BOOTROM are not installed.

Installing Database only

Note: For dual-CPU systems, verify that the system is operating in split mode before activating the Software Installation Tool.

The Database Menu of the Software Installation Tool is accessed by the <d> option on the Install Menu. The following options are available for installing a database:

```
Nortel Meridian - 1  Software/Database/PEROM CDROM INSTALL Tool (x11)
═══════════════════════════════════════════════════════════════════

You will now perform the database installation.

Note: If you are installing the Database from a floppy disk,
      please insert the correct disk now.


Please enter:
<CR>--> <a> - Install CUSTOMER Database
   (the customer database diskette must be in the Core 1 disk drive).
<b> - Install DEFAULT Database
    (the installation CDROM must be in the Core 1 disk drive).
<d> - Copy Database from the redundant disk.
<e> - Check the Database that exists on the hard disk.
<q> - Quit.

Enter Choice > a                                          553-7779
```

- Option <a> is to install the backup customer database from one or more 2MB diskettes.
- Option <b> allows installation from the CD-ROM containing the default database. This option is used on new systems which have no existing database.
- Option <d> copies the existing database from the redundant Core. This option is used when the database has already been installed on one Core. This option is used when upgrading from IOP/CMDU to IODU/C cards.

- Option <e> displays the version and issue of the current database residing on the Core. If database files are missing, error messages will be printed.

CAUTION

Before upgrading the system database, be sure a backup of the previous (source) database is on hand. Should any problems arise, it may be necessary to return to the previous database.

Install CP-BOOTROM

Note: Installation of CP-BOOTROM is available on systems with NT9D19, NT5D10 or NT5D03 Call Processor cards only. For systems with the NT6D66 Call Processor card, CP-ROM is installed instead of CP-BOOTROM. See page 334 for installing CP-ROM on a system equipped with an NT6D66.

Note: For dual-CPU systems, verify that the system is operating in split mode before activating the Software Installation Tool.

Option <e> is for installing new CP-BOOTROM. This option is used to install CP-BOOTROM while on Core 0 in a software upgrade, when software has already been installed using options <a> or <b> on Core 1, and software has already been copied onto Core 0 using option <o>.

The next screen displayed after selecting option <e> will show the version of CP-BOOTROM being replaced and version being installed, and the card slot where the CP-BOOTROM is being installed. The user is prompted to select <a> to continue with the CP-BOOTROM upgrade.

Install CP-ROM (NT6D66 CP cards only)

Note: Installation of CP-ROM is available on systems with NT6D66 Call Processor cards only. For systems with the NT9D19, NT5D10 or NT5D03 Call Processor cards, CP-BOOTROM is installed instead of CP-ROM. See page 334 for installing CP-ROM on a system equipped with an NT6D66.

> ***Note:*** For dual-CPU systems, verify that the system is operating in split mode before activating the Software Installation Tool.

Option <e> is for installing new CP-ROM. This option is used to install CP-ROM while on Core 0 in a software upgrade, when software has already been installed using options <a> or <b> on Core 1, and software has already been copied onto Core 0 using option <o>.

The next screen displayed after selecting option <e> will prompt the user to choose whether to install the CP-ROM from the hard disk (option <a>), or from CD-ROM (option <b>). If software has just been installed successfully, then option <a> should be used. However, if software was not installed, select option <b> to install from CD-ROM.

Install IOP-ROM

> ***Note:*** For dual-CPU systems, verify that the system is operating in split mode before activating the Software Installation Tool.

Option <f> is for installing new IOP-ROM. This option is used to install IOP-ROM while on Core 0 in a software upgrade, when software has already been installed using options <a> or <b> on Core 1, and software has already been copied onto Core 0 using option <o>, and CP-BOOTROM has been installed using option <e>.

The next screen displayed after selecting option <f> will show the version of IOP-ROM being replaced and version being installed, and the card slot where the IOP-ROM is being installed. The user is prompted to select <a> to continue with the IOP-ROM upgrade.

Reinstalling CP-Software

> ***Note:*** For dual-CPU systems, verify that the system is operating in split mode before activating the Software Installation Tool.

This option is used if a flash programming error occurs during software installation through options <a>, <b>, or <c>. Option <g>, which assumes that software files have already been installed on the hard disk, copies these files from the hard disk to the Flash EEPROM.

To copy system software from the other Core

> ***Note:*** For dual-CPU systems, verify that the system is operating in split mode before activating the Software Installation Tool.

Option <o> is used during a software upgrade when software has already been installed on Core 1, and the Software Installation Tool has been loaded on Core 0.

> ***Note:*** This option does not perform the installation of CP-BOOTROM (option <e>) or IOP-ROM (option <f>).

To go to the Tools Menu

Option <t> displays the Tools Menu and its options, which are described beginning on page 338.

To Install Keycode only

Option <k> is used when you wish to replace an existing Keycode.

To quit

> ***Note:*** For dual-CPU systems, verify that the system is operating in split mode before activating the Software Installation Tool.

Throughout the installation process, the option to quit is always available. Quitting with the Software Installation Tool quit commands is preferable to pressing the MAN RST button on the CP card, since quitting from the tool will erase unneeded temporary files.

When you are done using the NT5D61 Software Install Tool remove the diskette from the IODU/C and select option <q> to quit from the Main Menu. The terminal displays a confirmation to quit. Pressing <y> confirms the quit.

```
Nortel Meridian - 1  Software/Database/PEROM CDROM INSTALL Tool (x11)
═══════════════════════════════════════════════════════════════════

You selected to Quit. Please confirm.

Please enter:
<CR>--> <y> - Yes, Quit.
<n> - No, DO NOT Quit.

Enter choice > y                                        553-7751
```

The final screen displayed before quitting reminds the user that the Install diskette should be removed from the IODU/C floppy drive before pressing <a> to reboot the system.

```
Nortel Meridian - 1  Software/Database/PEROM CDROM INSTALL Tool (x11)
═══════════════════════════════════════════════════════════════════

You have selected to Quit the Software Installation Tool
You may reboot the system or return to the Main Menu.
Before rebooting the system, remove Install diskette from the floppy drive.

----------------------------------------------
DO NOT REBOOT USING BUTTON!!
----------------------------------------------

Please enter:
<a> - Reboot the system.
<CR>--> <m> - Return to the Main menu.

Enter Choice > a                                        553-7752
```

Tools Menu

To load the Software Installation Tool which contains the Tools Menu, insert the Install diskette which is compatible with your Call Processor card. Press the MAN RST button on the CP card to load the tool.

The first screen that appears after loading the NT5D61 Software Installation Tool is the NT Logo Screen.

This screen is displayed after the user presses <CR> from the NT Logo Screen. From this screen, selecting option <t> brings the user to the Tools Menu.

```
Nortel Meridian - 1  Software/Database/PEROM CDROM INSTALL Tool (x11)
═══════════════════════════════════════════════════════════════════════

                              M A I N   M E N U

The Software Installation Tool will install or upgrade Meridian-1
System Software, Database and the PE-ROM (both CP and IOP ROM).
You will be prompted throughout the installation and given the
opportunity to quit at any time.

Please enter:
<CR>-->  <u> - To Install menu.
         <t> - To Tools menu.
         <q> - Quit.

Enter choice > t                                          553-7797
```

Note: Insertion of the Keycode diskette is not required for accessing the Tools Menu.

The Tools Menu has new options for finding the CD-ROM status (option <g>), printing the Keycode (option <h>), printing information about the Security Device (option <i>), checking the customer-specific CD-ROM data (<j>), manually creating a Keycode diskette (<k>), and archiving the database (<s>).

The Tools Menu is displayed below.

```
Nortel Meridian - 1  Software/Database/PEROM CDROM INSTALL Tool (x11)

                                TOOLS MENU

This is the Tools Menu for Install. You can select the tool that
is appropriate. Please select one of the options below.

Please enter:
<CR>--> <a> - To set the system date and time.
        <b> - To partition the hard disk.
        <c> - To display the partition size of hard disk.
        <d> - To regenerate PDT Password.
        <g> - To print CDROM content.
        <h> - To print Keycode content.
        <i> - To print Security Device content.
        <j> - To Check the customer specific part of CDROM.
        <k> - To manually create Keycode floppy diskette.
        <r> - To install Keycode only.
        <s> - To archive existing database.
        <z> - To check MDU connection.
        <m> - To return to the Main Menu
                                                        553-7796

        Enter choice >
```

Each option from the Tools Menu is described in the following pages.

Setting the system date and time

This option is used to change the system date and time for the system's internal clock. The correct date and time will ensure that files are time-stamped accurately.

```
Nortel Meridian - 1  Software/Database/PEROM CDROM INSTALL Tool (x11)
__ __ __ __ __ __ __ __ __ __ __ __ __ __ __ __ __ __ __ __ __ __ __ __

You have selected the option to set the system date and time.
This will change the internal clock of your system to a new data
and time.

The system date and time are also used by Install to time-stamp the new files
created.

Pressing the carriage return at the prompt below will leave the
system date or time unchanged.

Please enter the new date or time.


Current date is: Tuesday 04-29-1997
Enter new date (dd mm yyyy) ? 30 4 1997
Date is set to: Wednesday 04-30-1997

Current time is: 15:52:00
Enter new time (hh mm ss) ? 15 05 45
Time is set to: 15 05 45

System Date and Time now is:
Wednesday 04-30-1997, 15:05:46                                553-7743
```

Partitioning the hard disk

Note: Option <b> requires a password, and should only be performed by Northern Telecom support personnel.

WARNING
Partitioning a disk erases all files from it.

Displaying the hard disk partition size

Option <c> displays the partition sizes of the hard disk. The manufacturer and model number of the hard disk are also displayed.

```
IODU 0
Hard Disk from: MAXTOR:7120SCS, Size:124MB,Sectors:248502
Unprotected     Part Size:30MB,  Sectors: 60000
Spare           Part Size:30MB,  Sectors: 60000
CardId          Part Size:1MB,  Sectors: 2000
Protected       Part Size:60MB,  Sectors: 120000
                                                553-7742
```

Regenerate the PDT password

Note: Option <d> requires a password, and should only be performed by Northern Telecom support personnel.

To install CP-software at a specified slot

Note: Option <e> requires a password, and should only be performed by Northern Telecom support personnel.

To print the CD-ROM content

Option <g> is used to find whether a CD-ROM exists on each IODU/C, and whether its sectors are readable. After selecting <g>, three options are available:

- **Fast** readability test, which takes about 17 seconds for each CD-ROM and reads 1/30th of the CD-ROM sectors.
- **Extensive** readability test, which takes about 3 minutes for each CD-ROM and reads 1/4th of the CD-ROM sectors.
- **Total** readability test, which takes about 6 minutes for each CD-ROM and reads all sectors of the CD-ROMs.

Note: The failure of a CD-ROM drive to read a known good CD-ROM may indicate a problem with the CD-ROM drive.

To print the Keycode content

Option <h> is used when you wish to display the information contained in the current Keycode. The information displayed includes machine type, software version, ISM limits, and which feature packages are enabled.

```
System Serial Number          :  46379
Software Version              :  1811
System Type                   :  Option 61C
Call Processor                :  CP68030
Release                       :  23
Issue                         :  30G
NTI Order Number              :  000000000000
NT SDID - 1                   :  00000000
NT SDID - 2                   :  00000000
Date and Time of Manufacture  :  06/03/1998 - 14:53:38

Note:  ( ) indicates that information is not available

ISM Limits:
  Loop Limit        :  32
  Sys TNs Limit     :  32767
  ACD Agt Limit     :  32767
  ACD DNs Limit     :  24000
  AST Limit         :  32767
  DSL Limit         :  100
  LTID Limit        :  100
  DCH Limit         :  64
  AML Limit         :  16
  MPH DSL Limit     :  100
  RAN CON Limit     :  32767
  RAN RTE Limit     :  512
  MUS CON Limit     :  1000
  Brand Index       :  1

Options Packages:
   0-2 4-5 7-25 28-29 232-55 57-65
   67 70-77 79-81 84 86 88-93
   95 98-105 107-109 111 113-121 125
  127 129 132-134 136 139-140 145-151
  153-155 157-160 162 164 170 172-175
  178-181 186 191-192 196 202-212 214-216
   218-219 222-225 227-229 231 233-235 240
   242-243 245-248 250-251 253-256 258-259 262-263
   286 290-293 296-297 301-303 305-310 313-316
   321 323-324 327-335
                                                553-7745
```

To print the Security Device content

Option <i> shows specific information about the Security Device, such as Serial Number. This enables the user to find information about the Security Device without removing the NT5D61 IODU/C card.

```
Engineering Code (Side x)   :NT5D61AA
Card Serial Number          :06NNTM1831RRC3 IOP
NT SDID                     :20000080
Security Device Type        :NT_TCH
System Serial Number        :46379          553-7746
```

To check the customer-specific part of the CD-ROM

Option <j> is used to check the readability of the Keycode-specified system software on the CD-ROM drive. Once all files have been checked successfully, the message “Checking directory /cdx/xxxx_DMR.Nxx ended successfully” is displayed to indicate completion.

To manually create a Keycode diskette

Option <k> is used to manually type in a keycode and save it to a 2MB diskette. Upon selecting this option, you may enter the characters into 21 Keycode entry lines of 16 characters each, which will compose the Keycode file to be saved on a 2MB diskette in the floppy drive.

Characters may be entered on the Keycode entry lines in one of two ways:

- manually entering each 16-character line followed by a **<CR>** or
- “pasting” each individual 16-character line, then pressing **<CR>** (available on a PC running Windows 95 ®, using the Copy command (Control-C) to copy a line of characters from a keycode file, positioning the cursor on the current Keycode entry line, and using the Paste command (Control-V) to paste the line).

If a line is entered which does not have 16 characters, a message will be displayed informing the user to reenter the line correctly.

To archive the existing database

This option is one of the methods (the ABKO and BKO commands from overlay 143 are other methods) that is available to backup the customer database to 2MB diskettes. The size of the backup files and the estimated number of 2MB diskettes required to store the database will be displayed.

To go back to the Main Menu

Option <m> is selected to return the user from the Tools Menu to the Main Menu, where the user may select to quit (<q>) or go to the Install Menu (<u>).

Index

A

adding new packages, 159
AML ports, upgrades to X11 release 18, 21
ARS (Automatic Route Selection), 16
AST sets
    defining ACD, 19
    Incremental Software Management, 14
ATM (Automatic Trunk Maintenance), 16
Automatic Inline Conversion
    procedures, X11 release 14 or later, 51
    upgrades to releases 13/14, 15, 18
    upgrading to X11 release 20, 24
    upgrading to X11 release 21, 25
    X11 releases supporting, 5
Auxiliary Processors, post-conversion power up of, 10

B

BARS/NARS, 16

C

call processing, effect of software upgrades on, 2
CCED system messages
    CP Card replacement, 200
CDR Expansion, 11
CD-ROM, upgrading disk drives to, 12
conversion media
    defined, 2
    described, 7
    option 61C/81C installation tool, 243
    X11 release 17, upgrades to, 19
conversion software (X11 release 10 upgrades), 17
converting software
    Automatic Inline Conversion, 5
    ISDN systems, 12
    option 61C/81 installation tool, 243
    overview, 1
    post-conversion procedure, 301
    pre-conversion procedure, 35
    requirements for, 6
    systems supported in documentation, 10
    to later issues of same release, 275
    to later issues of same releases, 89
    to later X11 releases, 47
Core 1, upgrading, 213
CP (Call Processor) Cards
    installing, 198
CP card upgrade, 310, 319
CP ROM menu, 294
CP/IOP ROMs, installing, 252, 253, 256, 269, 271, 278, 279, 281, 293
CPU (central processor unit), 10
CPU cards, attaching ROM cards to, 163
CPU Function cards, attaching ROM cards to, 163
CSL (Command Status Link), removing, 16

D

data cartridges
    described, 8
    installing new, 159
data dumps
    between software versions, upissues, release, 10
    pre-conversion procedure, 39
data, preventing corruption of, 10, 38

databases
installing, 251, 255, 262, 265, 280, 286, 289, 299
verifying required updates, 301
date/time, setting system, 273, 297
DCH ports (X11 release 18 upgrades), 21
D-channel monitors, 14
D-channel parameters, 14
DCHI ports configured as TTY ports, 14
disk drives, upgrading tape drives to, 11
DN Expansion, 11
documentation, related, 3
DSDN (Data Service DN), removing, 16
dual CPU systems
minimizing call processing disruptions on, 2
replacing ROM cards on, 167

E

ESDI TTY ports, 21

H

hardware breakpoints
X11 release 15 as, 18
X11 release 18 as, 20
hardware requirements
converting software, 6, 36
increasing memory for release, 176
ROM requirements, 164
X11 release 15 upgrades, 18
X11 release 18 upgrades, 20
X11 release 18/19 upgrades, 55
HWI0533 messages in CP Card replacement, 200

I

ICM cards, attaching ROM cards to, 163
Incremental Software Management, 153
INI messages, truncated, 14
initialization, system, 10
installation tool, option 61C/81, 243
database installation, 262
installation confirmation screen, 284
installation steps, 299
main menu, 299
quitting, 271, 295
status summary chart, 246
installation tool, option 61C/81C
database installation, 286
installation confirmation screen, 259
installation steps, 275
main menu, 249
messages, 247
status summary chart, 269, 271, 293
installing, 159
CP/IOP ROMs (option 61C/81 installation tool), 256, 278, 281
CP/IOP ROMs (option 61C/81C installation tool), 252, 253, 269, 271, 279, 293
data cartridges, 159
databases (option 61C/81 installation tool), 251, 262, 265, 289, 299
databases (option 61C/81C installation tool), 255, 280, 286
ROM cards, 163
software (option 61C/81 installation tool), 251, 299
software (option 61C/81C installation tool), 253, 254, 279, 280
ISDN (Integrated Services Digital Network) systems
converting, 12
ST system upgrades to releases 12–14, 18
ISM (Incremental Software Management), 14
ISM limits, 153

K

keycodes, 9

L

LD 10 program, 19
LD 11 program, 19

LD 135 program
Security Device replacement, 153
CP Card replacement, 197
LD 17 program, 37
LD 22 program, 23
LD 43 program, 7
LD 66 conversion program, 8

M

machine types
ROM requirements, 164
X11 releases supported by, 32
MADN (Multiple Appearance DN) Redirection Printer feature, 21
management features, release 19 system, 22
memory
allocation by Overlay Cache Memory feature, 21
increasing
X11 release 18 and later, 169
X11 release 21, 169
X11 release 24 and earlier, 169
pre-conversion procedure, 37
required for conversions, 10
X11 release 18/19, upgrade requirements, 55
XT and option 71 system utilization of, 19
memory cards (X11 release 18 upgrades), 21
memory SIMMs, 182
memory upgrades, 170, 172
menu, Installation Tool main, 249, 299
messages, Installation Tool warning/non-warning, 247
MS systems, 11

N

NT systems
converting
to X11 release 18, 20, 56
hardware requirements
increasing memory, 176
upgrades to X11 release 18, 20
parallel reloads
backing out of, 60, 116
completing, 118
procedure, 102, 131
ROM requirements, 164
upgrading to X11 release 20, 96
X11 release 18, conversions to, 56
backing out of parallel reload, 60
completing procedure, 62
X11 releases supported, 32
NT5D03 CP cards, 30, 180
NT5D10 CP cards, 27, 30, 180
NT5D20 IOP/CMDU card, 160
NT5D61 IODU/C card, 9, 28
CD-ROM, 9, 12
Database Transfer Utility, 9
Install diskette, 9
Keycode diskette, 9
security device, 9
NT6D03 CP cards, 27
NT6D11 International ISDN D-Channel cards, 12
NT6D63 IOP cards, 160
NT6D66, 210
NT6D66 CP cards, 27
SIMM precautions, 183, 212
upgrading to 48 MB, 211
completing the upgrade, 193, 230
Core 1, 213
SIMM precautions, 183, 212
upgrade preparation, 183, 212
upgrading Core 0, 220, 226
NT8D04 Superloop Network cards, 10
NT9D10/03 Call Processor Cards
installing, 198
NT9D19, 309
NT9D19 CP cards, 27, 30, 180

NT9D34 Enhanced Mass Storage Interface cards
installing data cartridges on, 161
switch settings, 162
three-disk configuration conversions, 93
NTND09Bx 6-MB cards, 177
NTND09Cx 12-MB cards, 177

O

on, 159
option 21 systems
requirements for upgrades to release 16, 19
ROM requirements, 165
upgrading to option 21E systems, 178
X11 release 18, upgrades to, 20
X11 releases supported, 32
option 21E systems
conversion requirements, 11
ROM requirements, 165
SMDU requirement for, 11
upgrading option 21 to, 20
upgrading to X11 release 20, 24, 96
X11 releases supported, 32
option 51 systems
hardware requirements
upgrades to X11 release 18, 20
ROM requirements, 165
upgrading to X11 release 20, 24, 96
X11 releases supported, 32
option 51C systems
upgrading to X11 release 20, 24
X11 releases supported, 32
option 61 systems
hardware requirements
increasing memory, 176
upgrades to X11 release 18, 20
parallel reloads
backing out of, 116
completing, 118
procedures, 102, 131
upgrading to X11 release 20, 24, 96
X11 release 18, conversions to, 56
backing out of parallel reload, 60
completing procedure, 62
X11 releases supported, 32
option 61C systems
installation tool, 243
ISDN site upgrades, 12
parallel reloads
backing out of, 111, 144
completing, 106
procedure, 129
upgrading to X11 release 20, 24
X11 release 19 and, 22
option 71 systems
hardware requirements
increasing memory, 176
upgrades to X11 release 18, upgrades to, 20
X11 release 16, upgrades to, 18
parallel reloads
backing out of, 124
completing, 126
procedure, 121
ROM requirements, 165
upgrading to X11 release 17, 93
upgrading to X11 release 19, 93
upgrading to X11 release 20, 96
X11 release 18, conversions to, 76
backing out of, 81
completing, 84
X11 release 19, upgrades, 22
X11 releases
supported, 33
supporting memory upgrades, 179

option 81 systems
ISDN site upgrades, 12
parallel relaods
backing out of, 111, 144
completing, 106
procedure, 129
X11 releases
supported, 33
option 81C systems
installation tool, 243
parallel relaods
backing out of, 111, 144
completing, 106
procedure, 129
ROM requirements, 165
X11 releases
supported, 33
Overlay Cache Memory feature, 21
overlays
accessing, in three-disk configuration, 93

P

packages, 159, 248
parallel reloads
backing out of
NT/61 system conversions to releases 18/19, 60
NT/RT/61 systems, 116
options 61C/81/81C, 111, 144
XT/71 systems, 124
completing procedure
NT/RT/61 systems, 118
options 61C/81/81C, 106
XT/71 systems, 126
IODU/C systems, 132
minimizing call processing disruptions, 2
monitoring CPU during, 10
pre-conversion procedure and, 39
procedure, 101
NT/RT/61 systems, 102, 131
options 61C/81/81C, 129
XT/71 systems, 121
patches
converting to later issues of same X11 release, 89
in X11 release 19 software, 23
pre-conversion procedure and, 37
removal prior to conversion, 15
post-conversion procedure
overview, 301
steps, 302
pre-conversion procedure
overview, 35
steps, 37
printouts
site data, 41, 306
system patch information, 23
PSDL (Peripheral Software Download), system initialization and, 10

Q

QPC513 ESDI cards, 21
QPC584 Mass Storage Interface cards
installing data cartridges on, 161
switch settings, 162
three-disk configuration conversions, 93
QPC709D ROM cards, 11
QPC717D ROM cards, 11
QPC742 Floppy Disk Interface cards
installing data cartridges on, 161
switch settings, 162
QPC742D FDI Cards, 10
QPC757 DCHI cards (vintage C), 12
QPC937A ROM cards, 11
quitting Installation Tool, 258, 271, 283, 295

R

reference documentation, 3
release 23 memory requirements, 25, 26, 27, 28, 29, 30, 31
replacing ROM cards
on dual CPU systems, 167
on single CPU systems, 166

ROM (Read Only Memory) cards
installing new, 163
replacing
on dual CPU systems, 167
on single CPU systems, 166
required for ST system upgrades, 11, 18
RT systems
hardware requirements
increasing memory, 176
upgrades to X11 release 18, 20
parallel reloads
backing out of, 116
completing, 118
procedure, 102, 131
ROM requirements, 164
upgrading to X11 release 20, 96
X11 release 18, conversions to
backing out of, 70
completing, 73
X11 release, conversions to, 66
X11 releases supported, 32

S

SDI (Serial Data Interface) cards
monitoring CPUs during parallel reloads, 10
X11 release 18, upgrades to, 21
security device, 9
single CPU systems
call processing disruptions on, 2
replacing ROM cards on, 166
site data printouts
post-conversion procedure, 306
pre-conversion procedure, 41
software packages, 159, 248
software packaging, 9
source software
defined, 2
requirements
converting to release 18/19, 55
ST systems
conversion requirements, 11
ROM requirements, 164
upgrades to releases 12–14, 18
upgrading to STE systems, 178
X11 release 18, upgrades to, 20
X11 releases supported, 32
X11 releases supporting memory upgrades, 179
status summary chart, Installation Tool, 246, 269, 271, 293
STE systems
conversion requirements, 11
ROM requirements, 164
upgrading ST systems to, 20
upgrading to X11 release 20, 24, 96
X11 releases supported, 32
system disks, conversion requirements for, 8
system management features, release 19, 22
system tapes, 8
system time/date, setting, 273, 297

T

tape drives, 11
tapes, system, 8
target software, 2
template audits, 38
three-disk configuration
procedure, 93
X11 release 16 upgrade requirements, 19
X11 release 17 upgrade requirements, 19
X11 release 19 upgrade requirements, 22
time/date, setting system, 273, 297
Tools menu, Installation Tool, 243, 244, 245, 273, 297
transferring a database, 282
TTY ports, DCHI ports configured as, 14

U

Upgrade, 96
Upgrade system installation to X11 release 22 (553-3001-258), 96

Upgrade system installation to X11 release 24 (553-3001-258), 96
Upgrading to a new Call Processor card, 309

V

verifying software conversion process, 301

X

X09 (converting to X11 release 2), 16
X11 release
  supporting Automatic Inline Conversion, 5
X11 release 7
  converting to X11 release 8
    ATM data, 16
  system tapes, 8
X11 release 8
  converting
    to release 10, 43, 44
  converting to release 9
    DSDNs, 16
  system tapes, 8
X11 release 9
  converting
    to release 10, 43, 44
  system tapes, 8
X11 release 10
  converting
    releases 8/9 to, 44
    to release 8/9 to, 43
    to releases 12/13, 6
  requirements
    disk drive, 11, 17
X11 release 11
  purpose in software conversions, 6
  release 10 to release 12/13 upgrades, 18
X11 release 12
  required conversion/site transition media, 18
  upgrading to, from lower releases, 53
X11 release 13
  Automatic Inline Conversion and, 18
  upgrading to, from lower releases, 53
X11 release 14, Automatic Inline Conversion and, 18, 51
X11 release 15
  hardware requirements, 18
X11 release 15.55 (Incremental Software Management), 14, 52
X11 release 16
  conversion requirements, 18
X11 release 17
  Incremental Software Management, 14
  requirements for upgrades to, 19
  upgrading from
    option 71 systems, 93
X11 release 18
  converting
    RT systems to, 66
  requirements for upgrades to, 20
X11 release 18 (and later)
  increasing memory, 169
  Incremental Software Management, 14
  ISDN site upgrades, 12
X11 release 19
  ISM tracking, 15
  requirements for upgrades to, 22
  system management features, 22
  upgrading from
    option 71 systems, 93
    XT systems, 93
X11 release 20
  Automatic Inline Conversion, 24
  requirements for upgrades to, 24
  upgrading from
    NT systems, 96
    option 21E systems, 96
    option 51 systems, 96
    option 61 systems, 96
    option 71 systems, 96
    RT systems, 96
    STE systems, 96
    XT systems, 96
X11 release 21
  Automatic Inline Conversion, 25
  increasing memory, 169
  requirements for upgrades to, 25
X11 release 22, 26

X11 release 23, 27, 30
X11 release 24, 30
X11 release24 (and earlier), increasing memory in, 169
X11 releases
converting to
later issues of same, 89
later releases, 47
ROM requirements, 164
supported by machine types, 32
tape to disk drive upgrade requirements, 11
XT systems
hardware requirements
increasing memory, 176
upgrades to X11 release 16, 18
upgrades to X11 release 18, 20
parallel relaods
backing out of, 124
completing, 126
procedure, 121
ROM requirements, 164
upgrading to X11 release 17, 93
upgrading to X11 release 19, 93
upgrading to X11 release 20, 96
X11 release 18, conversions to, 76
backing out of, 81
completing, 84
X11 release 19, upgrades to, 22
X11 releases
supported, 32
supporting memory upgrades, 179

Meridian 1

Software conversion procedures

© 1989, 1999 Nortel Networks Corporation
All rights reserved
Information is subject to change without notice. Nortel Networks Corporation reserves the right to make changes in design or components as progress in engineering and manufacturing may warrant. This equipment has been tested and found to comply with the limits for a Class A digital device pursuant to Part 15 of the FCC rules, and the radio interference regulations of Industry Canada. These limits are designed to provide reasonable protection against harmful interference when the equipment is operated in a commercial environment. This equipment generates, uses and can radiate radio frequency energy, and if not installed and used in accordance with the instruction manual, may cause harmful interference to radio communications. Operation of this equipment in a residential area is likely to cause harmful interference in which case the user will be required to correct the interference at their own expense.
SL-1 and Meridian 1 are trademarks of Nortel Networks Corporation.
Publication number: 553-2001-320
Document release: Standard 21.00
Date: June 1999
Printed in the United States of America

NORTEL NETWORKS™