Lucent Technologies
Bell Labs Innovations

# SLC® Series 5 Carrier System

## Remote Terminal Acceptance and Turnup

## Task Oriented Practice (TOP)

363-205-401
Issue 7
March 1997

This material is protected by the copyright and trade secret laws of the United States and other countries. It may not be reproduced, distributed or altered in any fashion by any entity, including other Lucent Technologies Business Units or Divisions, without the expressed written consent of the Customer Training and Information Products organization.

For permission to reproduce or distribute please contact:

Product Development Manager 1-800-334-0404

## Notice

Every effort was made to ensure that the information in this document was complete and accurate at the time of printing. However, information is subject to change.

## Mandatory Customer Information

### Federal Communications Commission (FCC) Statement

This equipment has been tested and found to comply with the limits for a Class A digital device, pursuant to Part 15 of FCC Rules. These limits are designed to provide reasonable protection against harmful interference when the equipment is operated in a commercial enrironment. This equipment generates, uses, and can radiate radio frequency energy, and, if not installed and used in accordance with the instruction manual, may cause harmful interference to radio communications. Operation of this equipment in a residence is likely to cause harmful interference in which case the user will be required to correct the interference at his own expense.

## Security

In rare instances, unauthorized individuals make connections to the telecommunications network through the use of remote access features. In such event, applicable tariffs require that the customer pay all network charges for traffic. Lucent Technologies cannot be responsible for such charges and will not make any allowance or give any credit for charges that result from unauthorized access.

## Trademarks

5ESS, SLC, SPOTS, ST, LGX, and Lightpack are registered trademarks of Lucent Technologies.
COMMON LANGUAGE is a registered trademark and CLEI, CLLI, CLCI, and CLFI are trademarks of Bell Communications Research, Inc.
UL is a registered trademark of Underwriters Laboratories, Inc.
Kimwipes is a registered trademark of Kimberly-Clark Corp.
Chloride is a refistered trademark of Chloride Group, Plc.

## Documentation Ordering Information

The ordering number for this document is 363-205-401. To order this document call 1-888-LUCENT8 or 1-888-582-3688. RBOC/BOC customers should process document orders or standing order requests through their Company Documentation Coordinator.

## Customer Assistance and Technical Support

Follow local procedures for obtaining technical assistance. Lucent Technologies also provides in-hours or emergency out-of-hours help for the *SLC* Series 5 Carrier System. Call the Lucent Technologies Regional Technical Assistance Center at 1-800-225-RTAC.

## Documentation Support

Lucent Technologies provides a telephone number for you to report errors or to ask questions about information in this document — the support telephone number is 1-800-334-0404 or 1-910-727-6681.

Developed by Lucent Technologies Network Systems Customer Training and Information Products.

# How Are We Doing?

Title: SLC Series 5 Carrier System Remote Terminal Acceptance and Turnup Task Oriented Practice (TOP)

Identification No.: 363-205-401 Issue No.: 7 Date: March 1997

Lucent Technologies welcomes your feedback on this Customer Information Product (CIP). Your comments can be of great value in helping us improve our CIPs.

1. Please rate the effectiveness of this CIP in the following areas:

| | Excellent | Good | Fair | Poor | Not Applicable |
|---|---|---|---|---|---|
| Ease of Use | | | | | ////////////////// |
| Clarity | | | | | ////////////////// |
| Completeness | | | | | ////////////////// |
| Accuracy | | | | | ////////////////// |
| Organization | | | | | ////////////////// |
| Appearance | | | | | ////////////////// |
| Examples | | | | | |
| Illustrations | | | | | |
| Overall Satisifaction | | | | | ////////////////// |

2. Please check the ways you feel we could improve this CIP.

❒ Improve the overview/introduction
❒ Improve the table of contents
❒ Improve the organization
❒ Include more figures
❒ Add more examples
❒ Add more detail
❒ Make it more concise/brief
❒ Add more step-by-step procedures/tutorials
❒ Add more troubleshooting information
❒ Make it less technical
❒ Add more/better quick reference aids
❒ Improve the index

Please provide details for the suggested improvement. _____

_____

3. What did you like most about this CIP?

_____

_____

4. Feel free to write any comments below or on an attached sheet.

_____

_____

_____

_____

If we may contact you concerning your comments, please complete the following:

Name: _____ Telephone Number: _____

Company/Organization: _____ Date: _____

Address: _____

When you have completed this form, please fold, tape and return to address on back
or Fax to: 910 727-3043.

---------- Do Not Cut — Fold Here And Tape ----------

NO POSTAGE
NECESSARY
IF MAILED
IN THE
UNITED STATES

Lucent Technologies
Bell Labs Innovations

# BUSINESS REPLY MAIL

FIRST CLASS PERMIT NO. 1999 GREENSBORO, NC

POSTAGE WILL BE PAID BY ADDRESSEE

**DOCUMENTATION SERVICES**
**2400 Reynolda Road**
**Winston-Salem, NC 27199-2029**

# How Are We Doing?

Title: SLC Series 5 Carrier System Remote Terminal Acceptance and Turnup Task Oriented Practice (TOP)

Identification No.: 363-205-401 Issue No.: 7 Date: March 1997

Lucent Technologies welcomes your feedback on this Customer Information Product (CIP). Your comments can be of great value in helping us improve our CIPs.

1. Please rate the effectiveness of this CIP in the following areas:

| | Excellent | Good | Fair | Poor | Not Applicable |
|---|---|---|---|---|---|
| Ease of Use | | | | | ////////////////// |
| Clarity | | | | | ////////////////// |
| Completeness | | | | | ////////////////// |
| Accuracy | | | | | ////////////////// |
| Organization | | | | | ////////////////// |
| Appearance | | | | | ////////////////// |
| Examples | | | | | |
| Illustrations | | | | | |
| Overall Satisifaction | | | | | ////////////////// |

2. Please check the ways you feel we could improve this CIP.

❒ Improve the overview/introduction
❒ Improve the table of contents
❒ Improve the organization
❒ Include more figures
❒ Add more examples
❒ Add more detail
❒ Make it more concise/brief
❒ Add more step-by-step procedures/tutorials
❒ Add more troubleshooting information
❒ Make it less technical
❒ Add more/better quick reference aids
❒ Improve the index

Please provide details for the suggested improvement. _____

_____

3. What did you like most about this CIP?

_____

_____

4. Feel free to write any comments below or on an attached sheet.

_____

_____

_____

_____

If we may contact you concerning your comments, please complete the following:

Name: _____ Telephone Number: _____

Company/Organization: _____ Date: _____

Address: _____

When you have completed this form, please fold, tape and return to address on back
or Fax to: 910 727-3043.

---------- Do Not Cut — Fold Here And Tape ----------

NO POSTAGE
NECESSARY
IF MAILED
IN THE
UNITED STATES

Lucent Technologies
Bell Labs Innovations

# BUSINESS REPLY MAIL

FIRST CLASS PERMIT NO. 1999 GREENSBORO, NC

POSTAGE WILL BE PAID BY ADDRESSEE

**DOCUMENTATION SERVICES**
**2400 Reynolda Road**
**Winston-Salem, NC 27199-2029**

# SLC® Series 5 Remote Terminal
# 363-205-401 TOP

## Introduction

## Overview

This document is used to establish a *SLC®* Series 5 Carrier System remote terminal (RT) channel bank in a *pre-service* state. This requires accepting the RT enclosure, equipping the power shelf(ves), and installing the circuit packs in the RT channel bank. Procedures to convert an RT system from one feature package to another are also included in this document.

The document also provides procedures to equip Fiber to the Home Distant Terminals (DTs).

This document is divided into Tabs supporting the five basic types of procedures done at the RT. At the top of each page the document number and issue information are on the inside of the page, and Tab Section: Element and page count are on the outside of the page. The following is a summary of each tab section:

- **Acceptance** – This section is used to verify that the RT enclosure has been properly placed, that it has not been damaged, and that all necessary splicing and power connections have been made before any of the electronic equipment is turned up. All standard RT equipment configurations are factory tested before being shipped so intershelf/bay wiring connections need not be inspected. Lucent splicing and installation practices can be used to verify intershelf wiring connections or to perform field modifications to the RT enclosure.
- **Power Up** – This section is used to equip the various power shelves that provide DC power (and battery reserve) to the electronic equipment shelves in the RT enclosure. This section *must be completed before the RT channel bank or other equipment shelves are turned up.*
- **RT Turn Up** – This section is used to install the circuit packs in the RT dual channel bank assembly. This section assumes the equipage feature package is known before the circuit packs are optioned and installed.
- **DT Turn Up** – This section is used at the DT site to install the circuit packs.

- **Conversions** – This section is used to convert an in-service RT system from one feature package to another. This includes the replacement of circuit packs and setting options. This section does not include any pre-conversion activities (grooming special services, digital facility activities, office-to-office testing, ...), and only provides the steps necessary to change the feature package equipage of the RT channel bank.

This document does not provide procedures to turn up equipment shelves other than the RT channel bank (for example, DDM-1000 or DDM-2000 multiplexers, DDM-Plus, or T1 repeater shelves). Refer to the appropriate documentation to equip and turn up this type of equipment. The Lucent Numerical Index provides a listing of documents in a division. The division is the first three numbers of the document. The 363-000-000 Numerical Index lists the *SLC* Carrier System, DDM-1000, DDM-2000, DDM-Plus, and other documents concerning Loop Transmission Systems.

## How to Use This Document

To find the instructions for performing acceptance, power up, RT turn up, DT turn up, or conversion tasks proceed as follows:

1. Go to the appropriate tab section and find your task in the TASK INDEX LIST (**IXL-001**).
2. Turn to the indicated director level or detailed level procedure. All procedures in each section are in numerical order, regardless of type. Procedures in this TOP are of two types:
   a. Non Trouble-Clearing Procedures (**NTP**) - A director level procedure that lists normal work items to perform other than trouble clearing.
   b. Detailed Level Procedures (**DLP**) - Detailed step-by-step instructions.
3. Perform all the items in the director level procedure in the indicated order unless it sends you to another director-level procedure. When you complete a director-level procedure, you have finished the task. Where more detailed information is required, you will be sent to a Detailed Level Procedure **DLP-( ).** You may also be sent to a Detailed Level Procedure by another Detailed Level Procedure.
4. **IMPORTANT:** When you complete a DLP, you MUST return to the procedure which sent you there.
5. **IMPORTANT:** In most cases, if one director-level procedure sends you to another director-level procedure, you should not return to the first director level procedure after you complete the second.
6. Sometimes you will be asked to verify that things have occurred. This may take the form of a formal statement of the expected response. At other times, the instructions will merely state *verify that ...* . If the expected

response is not observed and a specific trouble clearing reference is not made, you should reference the trouble analysis procedures in 363-205-500 Maintenance TOP to clear the trouble.

7. If you need assistance after completing all the applicable procedures in this section, call the Lucent Regional Technical Assistance Center (RTAC). The telephone number is **1-800-225-RTAC**.

Once you become familiar with this document and *SLC* Series 5 Carrier System RT channel bank and power shelves, you can use the Appendix Quick Reference Cards to turn up the power shelves, set common unit circuit pack options, and turn up an RT system.

Circuit packs being returned for repair should be sent, along with your company's repair and return form, to the following address:

Lucent Network Systems
Carolinas Service Center
6701-A North Park Blvd.
Charlotte, NC 28216

# Documentation Plan

This document is part of a documentation set that provides turnup, end-to-end, channel unit installation, and maintenance procedures. Figure 1 provides a documentation plan summary.

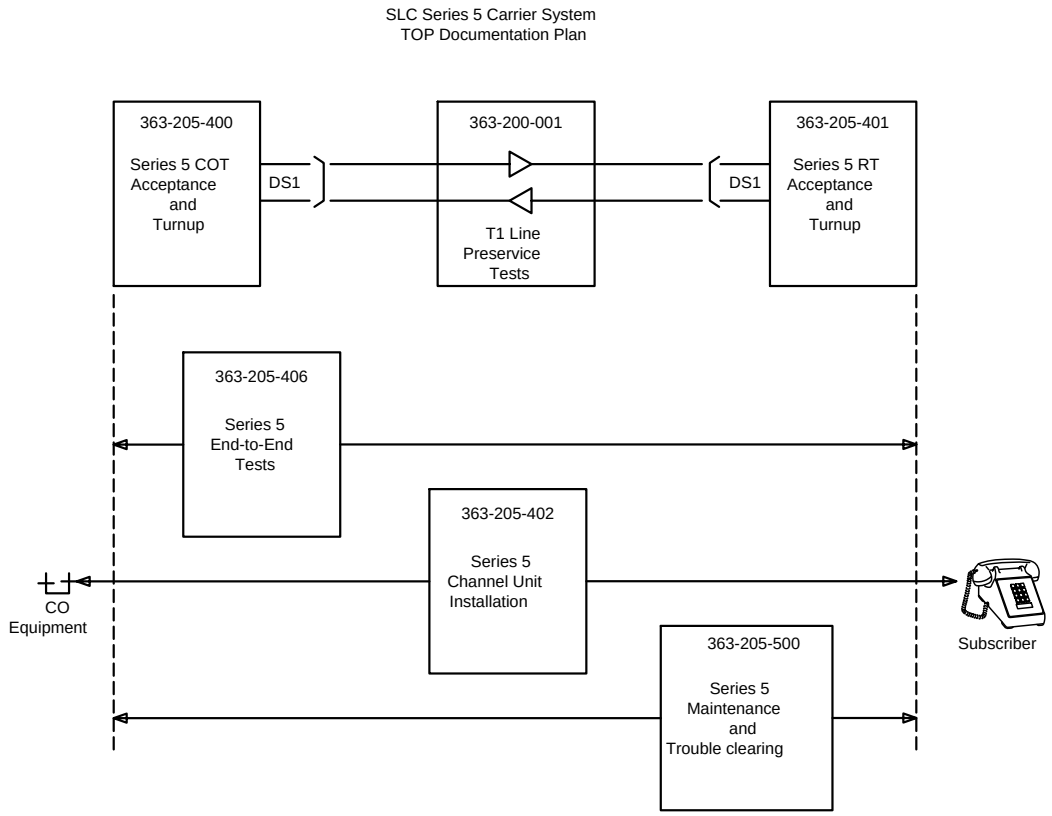


**Figure 1 — Documentation Plan Summary**

For universal Feature Package B, use 363-202-400 [Central Office Terminal (COT) TOP], 363-202-402 (Channel Unit Installation TOP), and 363-202-500 (Maintenance TOP) at the central office. For integrated Feature Package B use 363-200-005 (Recent Change TOP) to perform growth procedures at the *5ESS*® switch.

## Feature Packages

The *SLC* Series 5 Carrier System offers several feature package configurations. The choice of feature package is determined by the bank control unit (BCU) and alarm display unit (ADU), and supporting common units. Option settings on the ADU also determine the feature package configuration. Feature packages are abbreviated when referred to in text (for example FPC = Feature Package C).

The following is a summary of *SLC* Series 5 Carrier System feature packages.

- **FPA** – FPA has been rated DA (discontinued availability) and provides POTS service only.
- **FPB** – FPB provides a TR-08* interface that can be universal (*SLC* 96 COT), *integrated (TR-08 digital switch), Mode 1 or Mode 2 (*SLC* 96 modes, unconcentrated or concentrated), and provides special services. The service capabilities of FPB are abbreviated in text as follows:
  - FPB/[U or I] — U for universal, I for integrated
  - FPB/[U or I]/[M1 or M2]/ — M1 for Mode 1, M2 for Mode 2
  - FPB/[SS]/[U or I]/[M1 or M2]/ — SS for special services.
- **FPC** – FPC provides POTS special service capabilities.
- **FPC-AutoCut** – FPC-AutoCut provides the same features as FPC and can be cutover to FPB/SS/I/M1 without requiring dispatch to the RT site.
- **FPD** – FPD provides a low bit rate voice FPC capability (reduces the number of required digital facilities).
- **FTTH** – Fiber to the Home (FTTH) is supported by FPC, FPC-AutoCut, and FPB/SS/M1 or FPB/SS/M2. FTTH has two configurations:
  - Distant terminal versions provide up to four POTS lines per 900A( ) DT cabinet.
  - *SLC*-2000 multi-services distant terminal (MSDT) provides up to 24 POTS or special service lines per MSDT cabinet.
- **FPF** – FPF supports *SLC*-2000 MSDT feature and provides the same type service capabilities as FPC (using FPC-AutoCut configuration). Procedures to equip the MSDT are found in 363-205-004.
- **FP303** – With full-access time slot interchange (TSI), FP303 provides variable concentration of 96 lines on 2, 3, or 4 DS1 facilities. FP303 supports single party, multiparty (superimposed and frequency selective ringing), coin (coin first and dial tone first), direct inward dialing services and two-wire locally-switched special services in the CSA.

* Bellcore Technical Reference TR-TSY-000008 Issue 2, August 1987, *Digital Interface Between the SLC 96 Digital Loop Carrier System and a Local Digital Switch.*

Figure 2 shows the various feature package arrangements available for the *SLC* Series 5 Carrier System.

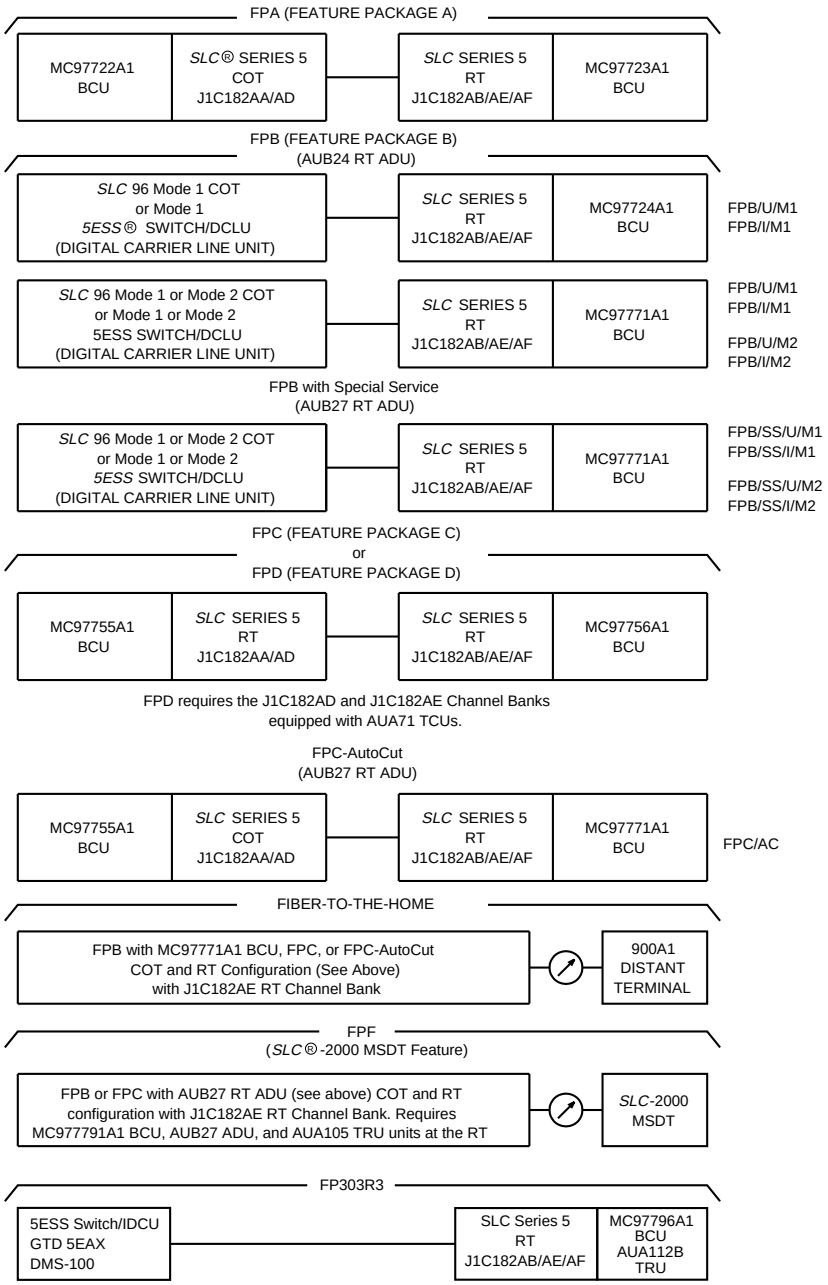


**Figure 2 — Feature Package Arrangements**

## Admonishments

Admonishments in this document have the following definitions:

***DANGER:*** This indicates the presence of a hazard that *will* cause death or severe personal injury if the hazard is not avoided.

***Warning:*** This indicates the presence of a hazard that *can* cause death or severe personal injury if the hazard is not avoided.

***Caution:*** This indicates the presence of a hazard that *will* or can cause minor personal injury or property if the hazard is not avoided. This includes equipment damage, loss of software, or service interruption.

## Equipment and Craft Personnel Considerations

**CAUTION:**
*An electrostatic discharge wrist strap, with a resistance between 250K and 1.5M Ohms, should be worn when handling Series 5 circuit pack to prevent possible damage to circuit packs. Before using the wrist strap, check it for shorts, opens, and proper resistance value. To avoid possible personal injury while using the wrist strap, do not connect it to the power shelf or adjacent portions of the RT frame.*

The Series 5 channel bank assembly and associated equipment provide high voltage ringing current and high amperage power distribution. You should remove any metal jewelry before working on this equipment, particularly around the backplane. *Follow local personal safety procedures when working on any Lucent product.*

## Check List

The following Tab Index tables provide a means to verify that all elements are present. This information should not be used for direct access to a particular element because *most elements are not stand-alone procedures.*

| Acceptance Tab Index | |
|---|---|
| **Element** | **Title** |
| IXL-001 | Acceptance Task Index List |
| NTP-002 | Acceptance |
| NTP-003 | Accept Remote Terminal Equipment |
| NTP-004 | Accept Distant Terminal Equipment |
| DLP-500 | Open RT Cabinet Enclosure |
| DLP-501 | Perform Overall Visual Inspection of Remote Terminal Equipment |
| DLP-502 | Perform Overall Visual Inspection of *LGX*® Fiber Optic Distributing Frame (FTTH) |
| DLP-503 | Visually Inspect AC Powering, Grounding, Copper Termination, and Fiber Termination at 900A1 Distant Terminal |
| DLP-504 | Visually Inspect AC Powering, Grounding, Copper Termination, and Fiber Termination at Collocated Distant Terminal Site |
| DLP-505 | Visually Inspect DC Powering, Grounding, Copper Termination, and Fiber Termination at 900A2 or 900A3 Distant Terminal |

| Power Up Tab Index | |
|---|---|
| **Element** | **Title** |
| IXL-001 | Power Up Cabinet or Frame Power Plant Task Index List |
| NTP-002 | Acceptance |
| NTP-003 | Turn Up J1C182BA Power Shelf and Supporting Equipment in Frame, 51, 80, or 90-Type Cabinet RT |
| NTP-004 | Add Battery String Equipment to J1C182BA Power Shelf in Frame, 51, 80, or 90-Type Cabinet RT |
| NTP-005 | Turn Up J1C182BB Bulk Power Shelf and Supporting Equipment in RT Frame |
| NTP-006 | Turn Up J1C182BD Power Shelf in 80A Cabinet |
| NTP-007 | Turn Up ED-7C704-30 Bulk Power Plant in 80E Cabinet |
| NTP-008 | Turn Up J1C182PB-1 Optics Power Shelf and Install AYB1B Optical Units |
| DLP-500 | Verify Cabinet AC Power Panel Connections |
| DLP-501 | Install Load Distribution Unit (LDU) in Power Shelf |
| DLP-502 | Perform Initial Installation and Tests of Batteries in Frame- Type or Cabinet-Type RT Enclosure |
| DLP-503 | Perform Initial Installation and Tests of Batteries for 51-Type (ED-7C601-30) Cabinet RT |
| DLP-504 | Perform Test of RT Batteries Using 197A Battery Load Test Set |
| DLP-505 | Install 337A Battery Charger |
| DLP-506 | Install 336A Rectifiers in J1C182BA Power Shelf |
| DLP-507 | Perform Battery Charger Test |
| DLP-508 | Install 3C Ringing Generators in Power Shelf |
| DLP-509 | Install AUG1 Positive Ring Unit in J1C182BA Power Shelf |
| DLP-510 | Install Bank Fuse Unit (BFU) in Power Shelf |
| DLP-511 | Install and Test Power Converter Unit (PCU) in Facility Shelf |
| DLP-512 | Perform Installation and Tests of Batteries in Existing Frame- Type or 80-Type (ED-7C621-30 or ED-97977-30) Cabinet RT |
| DLP-513 | Perform Installation and Tests of Batteries for Existing 51-Type (ED-7C601-30) Cabinet RT |
| DLP-514 | Add 337A Battery Chargers to an Existing Frame-Type or 80-Type Cabinet RT Battery Shelf |

Continued on next page

| Power Up Tab Index (Contd) | |
|---|---|
| **Element** | **Title** |
| DLP-515 | Add 336A Rectifiers to Existing J1C182BA Power Shelf |
| DLP-516 | Install Ringing Switch Unit (RSU) in J1C182BB Bulk Power Shelf |
| DLP-517 | Install 3C Ringing Generators in J1C182BB Bulk Power Shelf |
| DLP-518 | Install AUG1 Positive Ring Unit in J1C182BB Bulk Power Shelf |
| DLP-519 | Install 336A Rectifiers in J1C182BD Power Shelf |
| DLP-520 | Install Ring Control Unit (RCU) in J1C182BD Power Shelf |
| DLP-521 | Install 3H1 Ringing Generators in J1C182BD Power Shelf |
| DLP-522 | Install *Chloride** Batteries in 80A Cabinet Battery Compartment |
| DLP-523 | Install Lineage 2000 VR Series Batteries in 80A Cabinet Battery Compartment |
| DLP-524 | Install *Chloride* Batteries in 80E Cabinet Battery Compartment |
| DLP-525 | Install Lineage 2000 VR Series Batteries in 80E Cabinet Battery Compartment |
| DLP-526 | Verify Connections to ED-83114-30 Control & Distribution Panel |
| DLP-527 | Install and Test Power Units in Rectifier Shelf |
| DLP-528 | Install 3C or 3A Ringing Generators in Ring Shelf |
| DLP-529 | Install Ring Control Unit (RCU) in Ring Shelf |
| DLP-530 | Install and Test Power Converter Units (PCUs) in RT Optics Power Shelf |
| DLP-531 | Install Alarm/Fan Control Unit (A/FCU) in Optics Power Shelf |
| DLP-532 | Install AYB1B Optical Units in Optical Shelf |
| DLP-533 | Check 197A Battery Load Test Set for Proper Operation |
| DLP-534 | Install Lineage 2000 VR Series Batteries in 80D Cabinet Battery Compartment |
| DLP-535 | Install *Chloride* Batteries in 80D Cabinet Battery Compartment |
| DLP-536 | Check 4A or 4B Fan Unit Operation |
| * Registered trademark of Chloride Group, Plc. | |

| RT Turn Up Tab Index | |
|---|---|
| **Element** | **Title** |
| IXL-001 | RT Channel Bank Turn Up Task Index List |
| NTP-002 | Acceptance |
| NTP-003 | Turn Up Series 5 RT Blue or White System for Any Feature Package Except FP303 |
| NTP-004 | Add Digroups C and D to an In-Service RT System for Any Feature Package |
| NTP-006 | Turn Up Series 5 RT Blue or White System Equipped for Feature Package 303 |
| NTP-007 | Add DS1s to an In-Service Feature Package 303 RT |
| TAP-100 | Clear FAIL LED problems on a Unit During Turnup and Conversion |
| DLP-500 | Verify that Correct Complement of Circuit Packs is Available |
| DLP-501 | Install Line Fuse Unit (LFU) in RT Facility Shelf |
| DLP-502 | Install and Test Power Converter Unit (PCU) in Facility Shelf |
| DLP-503 | Install Fan Control Unit (FCU) |
| DLP-504 | Install Channel Fuse Unit (CFU) |
| DLP-505 | Option and Install AUB21 or AUB24 ADU |
| DLP-506 | Option and Install AUB27 ADU |
| DLP-507 | Option and Install AUB26 ADU |
| DLP-508 | Install Bank Control Unit (BCU) |
| DLP-509 | Install and Test Power Converter Unit (PCU) in AB Shelf |
| DLP-510 | Install Transmit/Receive Unit (TRU) in AB Shelf |
| DLP-511 | Install Transcoder Unit (TCU) |
| DLP-512 | Install Line Interface Unit (LIU) |
| DLP-513 | Install PCU Unit in CD Shelf |
| DLP-514 | Install Transmit/Receive Unit (TRU) in CD Shelf |

Continued on next page

| RT Turn Up Tab Index (Contd) | |
|---|---|
| **Element** | **Title** |
| DLP-515 | Install Line Switch Unit (LSU) in Facility Shelf |
| DLP-516 | Install Channel Test Unit (CTU) |
| DLP-517 | Install Digital Test Unit (DTU) |
| DLP-518 | Perform RT Indicator Test |
| DLP-519 | Perform Check of RT Remote Alarms |
| DLP-520 | Test Battery String (OPEN BAT TEST) |
| DLP-521 | Verify Correct Complement of Circuit Packs for FP303 |
| DLP-522 | Install FP303 Bank Control Unit |
| DLP-523 | Install Alarm Display Unit in FP303 Optioned for Preservice and Unequipped |
| DLP-524 | Set the Option Switches on a C- or D-type LIU |
| DLP-525 | Install AUA74 Line Switch Unit (LSU) in Facility Shelf |
| DLP-526 | Perform RT Indicator Test |

| DT Turn Up Tab Index | |
|---|---|
| **Element** | **Title** |
| IXL-001 | DT Turn Up Task Index List |
| NTP-002 | Acceptance |
| NTP-003 | Turn Up Series 5 Fiber to the Home 900A( ) Distant Terminal |
| DLP-500 | Turn Up or Add Customer DC Back Powering For 900A2 or 900A3 Distant Terminal |
| DLP-501 | Install ASH1 Power Converter Unit (PCU) In 900A1, 900A2, or 900A3 DT Closure |
| DLP-502 | Install EAF1 Drop Test Card on ASJ2 Channel Unit At Distant Terminal |
| DLP-503 | Install ASJ1 or ASJ2 Channel Unit in 900A1, 900A2, or 900A3 DT Closure |
| DLP-504 | Install AYB1B Optical Unit in 900A1, 900A2, or 900A3 DT Closure |
| DLP-505 | Power Up 900A1, 900A2, or 900A3 DT |
| DLP-506 | Measure Voltages at ASH1 PCU Faceplate |

| Conversions Tab Index | |
|---|---|
| **Element** | **Title** |
| IXL-001 | Conversions Tab Index |
| NTP-002 | Acceptance |
| NTP-003 | Convert Series 5 RT from Feature Package A Capability to Feature Package C Capability |
| NTP-004 | Convert Feature Package A or C RT to Feature Package C-AutoCut |
| NTP-005 | Convert Series 5 RT from Feature Package B Mode 2 to Feature Package B Mode 1 |
| NTP-006 | Convert Series 5 RT from Feature Package B Mode 1 to Feature Package B Mode 2 |
| NTP-007 | Add Special Service Capability to Feature Package B RT |
| NTP-008 | Add or Remove Protection Line Option |
| NTP-009 | Convert Series 5 RT to Any Feature Package Capability Generic Procedures |
| NTP-010 | Convert Feature Package B Mode 1 or Mode 2 to Feature Package 303 |
| NTP-011 | Reinstate Feature Package B Following a Failed Conversion to Feature Package 303 |
| TAP-100 | Clear FAIL LED Problems on a Unit During Turnup and Conversion |
| DLP-500 | Verify That Correct Complement of Circuit Packs is Available |
| DLP-501 | Install AUB27 Alarm Display Unit (ADU) for FPC Conversion |
| DLP-502 | Install Bank Control Unit (BCU) for FPC Conversion |
| DLP-503 | Install Channel Test Unit (CTU) |
| DLP-504 | Install Digital Test Unit (DTU) |
| DLP-505 | Set ZCS LIU Line Coding Option for Feature Package C-AutoCut or FPB Mode 2 Conversion |
| DLP-506 | Install AUB27 Alarm Display Unit (ADU) for Feature Package B Mode 1 or Mode 2, or FPC-AutoCut Conversion |

Continued on next page

| Conversions Tab Index (Contd) | |
|---|---|
| **Element** | **Title** |
| DLP-507 | Install Line Interface Unit (LIU) |
| DLP-508 | Install AUB24 Alarm Display Unit (ADU) for Feature Package B Mode 1 or Mode 2 Conversion |
| DLP-509 | Perform End-to-End Test When Converting a Feature Package B Mode 2 to Mode 1 |
| DLP-510 | Perform End-to-End Test When Converting a Feature Package B Mode 1 to Mode 2 |
| DLP-511 | Install Line Switch Unit (LSU) in Facility Shelf |
| DLP-512 | Install Alarm Unit in FP303 Optioned for Preservice and Unequipped |
| DLP-513 | Install FP303 Bank Control Unit |
| DLP-514 | Set the Options Switches on a C- or D-type LIU |
| DLP-515 | Perform RT Indicator Test |
| DLP-516 | Install AUA74 Line Switch Unit (LSU) in Facility Shelf |
| DLP-517 | Test Alarm System for Power Minor and Fan Alarms |
| DLP-518 | Test Remote Miscellaneous Alarm (If Provided) |
| DLP-519 | Test Single-Party POTS Channel End to End (IDCU to Series 5 RT) |
| DLP-520 | Install Alarm Display Unit in FPB Optioned for Preservice and Unequipped |
| DLP-521 | Verify Correct Complement of Circuit Packs for FP303 |

# Accept Series 5 RT Cabinet or Frame Introduction

The purpose of acceptance procedures is to visually verify that the cabinet or frame has not been damaged while being installed and that power is supplied to the enclosure.

All intershelf and interframe/bay wiring is tested before the equipment is shipped from the factory. The need to verify cable connections (power, digital pairs, drop pairs, fan control leads, etc.) between the channel bank assembly and various apparatus shelves is not necessary. Often these connections are not easily accessible because they are tied down to the frame work behind the equipment shelves.

If you want to verify these connections, the installation and splicing documents (640-250-XXX, see index 640-000-000) provide detailed cabling drawings for specific remote terminal (RT) enclosure configurations. See Table A for an abbreviated list of 640-250-XXX splicing documents. For cabinet enclosures, you can determine the equipment configuration from a label inside the side 1 right door of the cabinet. This label provides the cabinet ED number and the equipage group numbers. From this information and the 640-000-000 numeric index you can find the appropriate installation and splicing documents.

This document assumes splicing of the digital facility and derived pairs in the RT enclosure has been completed and the commercial AC power has been connected.

For Fiber to the Home distant terminals (DTs) and multi-services distant terminals (MSDTs), the installation and splicing procedures can be found in 363-205-002 and 363-205-004 User's Manual (respectively).

| **Table A**<br>**Abbreviated List of Splicing Documents** | |
|---|---|
| **AT&T** | **Equipment** |
| 640-250-223 | 80 CAB REM TERM INSTLN & SPLG METALLIC *SLC* |
| 640-250-238 | 51A CABINET - SPLICING AND INSTALLATION |
| 640-250-239 | 51A CAB SPLICING & INSTLN DDM-2000 |
| 640-250-247 | *SLC* 5 REM TERM IN 80 CAB-PRECABLED SLC 5 |
| 640-250-252 | 80D FIBER *SLC* (GROUP 80) |
| 640-250-254 | 80E CABINET FIBER GR 88 (DESCR INSTLN SPLG) |
| 640-250-255 | 80D CABINET GROUP 90 |
| 640-250-256 | 80E CABINET FIBER GR 70, 71, 78, 90, & 91 |
| 640-250-257 | 80E BP SPLG & EQPT INSTLN DDM-1000/2000 |
| 640-250-258 | 80E CABINET BP SPLICING METALLIC |
| 640-250-258 | 80E BP GR 14 SPLG & EQPT INSTALLATION |
| 640-250-259 | 80E BP SPLICING & CABLING FTTH |
| 640-250-260 | 80D DESCR & SPLICE *SLC* 96 METALLIC |
| 640-250-261 | 80E DP GR 58, 59, 73, 74, 75, & 76N |
| 640-250-262 | 80E BP GR 13 FDI |
| 640-250-263 | 80E BP GR 89 FDI DDM-1000/2000 |
| 640-250-264 | 80D DP FIBER INSTLN & SPLG DDM-2000 |
| 640-250-264 | 80D DP FBR INSTLN & SPLG DDM-2000 QDS1 OPT EX |
| 640-250-265 | 80D BP DESCR/INSTLN/SPLG DDM-2000 OC-12 |
| 640-250-270 | 90A-TYPE CABINET BRT |
| 640-250-271 | 90A DESCR/INSTLN/SPLICING DDM-2000 |
| 640-250-272 | 90A-TYPE CABINET BRT *UL** VERSION |
| 640-250-272 | 90A *UL* OF HUB CABINET DDM-1000/DDM-2000 |
| 640-250-274 | 80E BP DESCR/INSTLN/SPLG DDM-2000 OC12 |
| 640-250-276 | 80A CAB SPLICING & EQPT INSTLN METALLIC |
| 640-250-277 | 80A CAB SPLICING & EQPT INSTLN FIBER |
| 640-250-279 | 80D BP SPLICING & EQPT INSTLN FIBER |
| 640-250-280 | CEV DESCR INSTLN SPLICING |
| 640-250-281 | 90B DESCR INSTLN SPLICING DDM-2000 |
| 640-250-282 | 90A DESCR INSTLN SPLICING - *SLC* 96 |
| 640-250-283 | 90A DESCR/INSTLN/SPLG *SLC* 96 INTERNATIONAL |
| 640-250-286 | 80D BP SPLICING & EQPT INSTLN METALLIC |
| 640-250-287 | 80D BP SPLICING & EQPT INSTLN FDI |
| 640-250-288 | 80D DP GTE DESCR/INSTLN/SPLG FIBER |
| 640-250-289 | 80E BP GTE SPLICING & EQPT INSTALLATION |
| 640-250-292 | 51A CODING SCHEME & ORDER INTERNATIONAL |
| 640-250-325 | 80D CAB DESCR, INSTLN, SPLG-*SLC* 5 CARR SYS |
| 640-250-326 | 80D DESCR & SPLICE *SLC* 96/SERIES 5 |
| 640-250-327 | 80E CABINET RT DESCR INSTLN SPLG *SLC*15 (METROP) |
| * Registered trademark of Underwriters Laboratories, Inc. | |

## SUMMARY

The basic acceptance procedures are listed below:

- Verify that the RT enclosure has been installed and spliced.
- Verify that all equipment shelves are mounted securely and are not damaged. Look for misaligned, dented, or twisted shelves and bent or broken slot connectors of front of equipment shelf.
- Look for bent, broken, or crossed terminals and pins if backplane is accessible.
- Verify that the circuit pack(s) can be installed in the shelf if plug-in circuit packs for the shelf equipment are available. Remove all circuit packs installed.
- Verify power panel circuit breaker (fuses in a 51-type cabinet) can be turned on without tripping the breakers. Verify proper AC voltage at each outlet jack on the power panel. Use an AC circuit tester at power panel outlet jacks and verify AC power has been spliced in correctly.
- Verify power cord connections to the power panel per label  inside the side 1 door.

# Acceptance
# Task Index List

**FIND YOUR JOB IN THE LIST BELOW . . . . . THEN GO TO**

Acceptance . . . . . NTP-002
Accept Remote Terminal Equipment . . . . . NTP-003
Accept Distant Terminal Equipment . . . . . NTP-004

CAUTION:
*In dusty areas (for example, near construction sites), Lucent Technologies recommends tenting the RT cabinet to protect electronic equipment whenever cabinet doors are open for extended periods.*

# Acceptance

## GENERAL

Acceptance tests are performed on the remote terminal (RT) equipment, and if the system is equipped with the Fiber-to-the-Home (FTTH) feature, the distant terminal (DT) to ensure proper installation procedures have been performed.

The procedure for performing acceptance tests for the RT equipment is listed in NTP-003.

There are three codes of DTs available. The 900A1 is AC powered and can be mounted on the customer residence or collocated and share a common AC power box. The 900A2 and 900A3 are powered by DC current back fed from the customer residence.

The procedure for performing acceptance tests for the DT is listed in NTP-004.

The acceptance tests generally assume the following:

- That accurate and concise system designations and office records are available to properly identify system and equipment
- That any trouble found and not corrected during testing is referred to the responsible installation group
- That the test equipment used is available, properly tested, and working properly.

# Accept Remote Terminal Equipment

| DO ITEMS BELOW IN ORDER LISTED | FOR DETAILS, GO TO |
|---|---|
| 1. Get support apparatus listed:<br>• 216-type tool (80-type cabinet only)<br>• Special key (modified hex key) - COMCODE 846244168 (51A and 80-type cabinets only)<br>• digital multimeter (DMM) with an accuracy of 0.02% and an AC/DC input impedance of ≥ 1 megohm. | |
| 2. **CAUTION:** *An electrostatic discharge wrist strap with a minimum resistance of 250K Ohms should be worn when handling Series 5 circuit packs to prevent possible damage to the circuit packs. Before using the wrist strap, check it for opens, shorts, and minimum resistance value. If the strap does not pass these checks it should not be used. To avoid possible personal injury while using the wrist strap, do not connect it to the power shelf or adjacent portions of the RT frame. Connect the wrist strap to ESD GRD jack on the fan unit, if present. If grounding jack is not present, connect wrist strap to bare-metal section of the frame well away from the power shelf.*<br>Open RT cabinet. | DLP-500 |
| 3. Perform overall visual inspection of remote terminal (RT) enclosure equipment. Also, verify integrity of ESD ground jack. | DLP-501 |
| 4. If system is equipped with Fiber-to-the-Home feature, continue with Item 5. Otherwise, proceed to Item 6. | |

| DO ITEMS BELOW IN ORDER LISTED | FOR DETAILS, GO TO |
|---|---|
| 5. Perform overall visual inspection of optical interconnect (OIC) high density interconnect (HDIC) frame. | DLP-502 |
| 6. Close and secure RT (if not performing power up procedures at this time). | |

# Accept Distant Terminal Equipment

| DO ITEMS BELOW IN ORDER LISTED | FOR DETAILS, GO TO |
|---|---|
| 1. Get support apparatus listed:<br>• Special key (allen-type wrench) - COMCODE 840841324<br>• Digital multimeter (DMM) with an accuracy of 1.0% and an AC/DC input impedance of ≥ 1 megohm. | |
| 2. **NOTE:** There are three codes of distant terminals (DT) available. The 900A1 is AC powered and has insulation displacement (push on) connector for the drop pairs. The 900A1 DT can be individually mounted on the customer's residence or can be clustered together and share a common AC power source. The 900A2 and 900A3 DTs are DC powered and typically collocated two or three to a pedestal. The 900A2 has binding post connectors for the drop pairs while the 900A3 DTs have insulation displacement connector. DC power supply for these DTs come from up to eight 48-volt DC power supplies at various customer premises.<br><br>For AC powered DT (900A1), continue with Step **3**, otherwise for DC powered DT (900A2 or 900A3) proceed to Step **7**. | |
| 3. If a common AC power arrangement is used, perform overall visual inspection of AC circuit breaker box and outlets, cluster enclosure (if applicable), drop wire protector panel, and 900A1 (distant terminal) closure for physical damage and proper mounting. | |
| 4. For single DT site, perform overall visual inspection of network interface unit (NIU), AC outlet, and 900A1 DT closure for physical damage and proper mounting. | |

| DO ITEMS BELOW IN ORDER LISTED | FOR DETAILS, GO TO |
|---|---|
| 5. Check AC power, grounding, drop wire protector panel, and fiber termination. | |
| A. For single DT site. | DLP-503 |
| B. For common AC powered DT site (for example low profile pedestal). | DLP-504 |
| 6. Close and secure 900A1 DT (if not performing turnup procedures at this time). | |
| 7. Open the low profile pedestal housing the 900A2 or 900A3 DTs and perform an overall visual inspection of the enclosure, DC power interface, and 900A2 or 900A3 DTs for physical damage and proper mounting. Check DC power interface and 900A2 or 900A3 DT for proper grounding, copper termination, and fiber termination. | DLP-505 |
| 8. Close and secure 900A2 or 900A3 DT and pedestal (if not performing turnup procedures at this time). | |

# Open RT Cabinet Enclosure

1. The cabinet is typically opened using a special key (allen-type wrench) and a 216-type tool as shown in Figure 1.

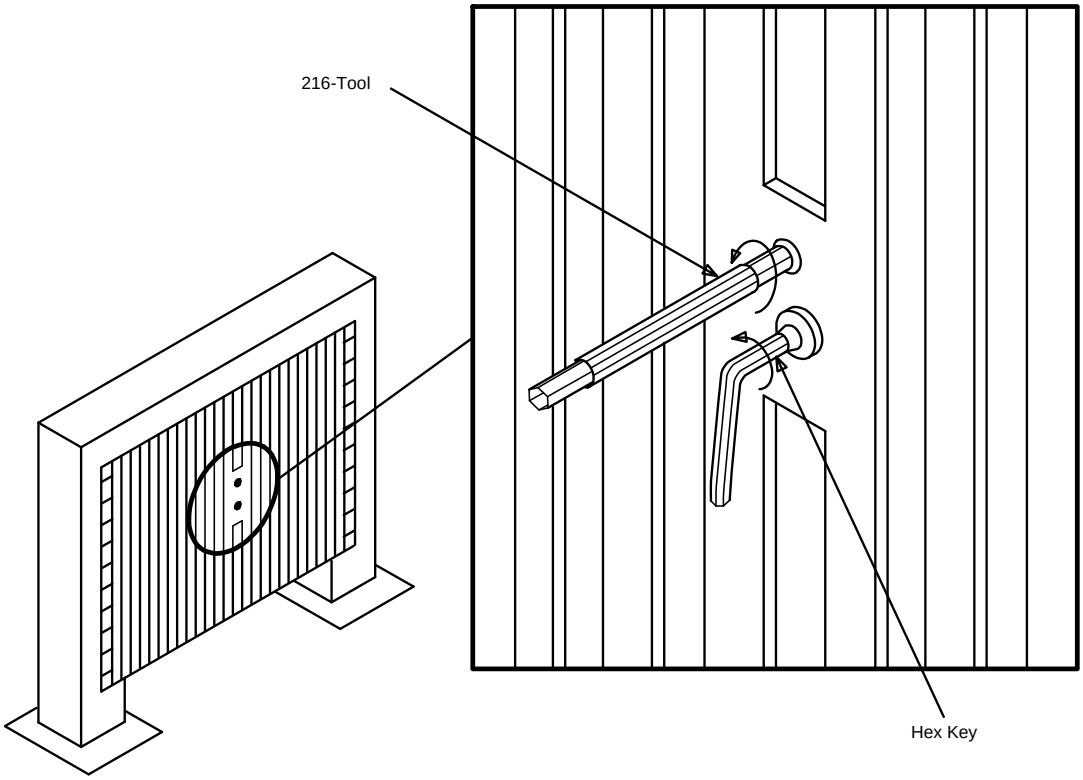


**Figure 1 – Opening a Typical Cabinet with Hex Key and 216-Tool**

2. On the inside of the side 1 left door there is an AC wiring diagram with a Table for circuit breaker code. On the inside of the side 1 right door there is a label listing the cabinet ED number and the equipage groups.

**STOP. YOU HAVE COMPLETED THIS PROCEDURE.**

# Perform Overall Visual Inspection of Remote Terminal Equipment

1. If remote terminal (RT) is frame mounted, proceed to Step **7**.

2. Turn **MAIN** circuit breaker **ON** and verify AC power at convenience outlet(s). If proper AC voltage is not present, resolve problem through local procedures.

3. Operate **MAIN** circuit breaker in transfer/breaker panel to **OFF**.

4. Verify that AC power into cabinet is correctly terminated on **MAIN** circuit breaker. This can be accomplished by ensuring that AC power is not present on the AC utility outlets in cabinet when the **MAIN** circuit breaker is in **OFF** position.

5. Is AC power present at utility outlets?

   If **YES,** then continue with Step **6.**
   If **NO,** then proceed to Step **7.**

6. Resolve problem through local procedures.

7. Measure resistance between ESD jack and known ground using DMM. Should be < 1 ohm. If not < 1 ohm, then replace fan unit.

8. For dual RT channel bank assemble, verify that no plug-in units are installed. (Remove any units that are installed.)

9. Verify that shelves are tightly secured and free of defects or damage. Resolve problems through local procedures.

10. Verify that all electrical connectors inside of shelves are properly secured and aligned with shelf slots. Resolve problems through local procedures.

11. Verify that there are no broken, bent, or misaligned contacts on front of connectors. Resolve problems through local procedures.

12. Is one channel unit plug-in of any type available?

    If **YES,** then continue with Step **12.**
    If **NO,** then proceed to Step **13.**

13.

> **NOTE:**
> Plug-in units are not inserted into connectors until all tests and verifications have been completed.

At both white and blue banks, insert channel unit in slots labeled **1/2**, **23/24**, and **47/48** on shelf AB and slots **49/50**, **71/72**, and **95/96** on shelf CD to check for misaligned or bowed shelves. Remove unit and proceed to Step **14.**

14. Inspect for misaligned, dented, or twisted shelves.

15. Are there any misaligned, dented, or twisted shelves?

    If **YES,** then continue with Step **15.**
    If **NO,** then proceed to Step **16.**

16. Resolve problems through local procedures.

17. Verify that 3-type protectors are installed in protector panel.

18. Use special key to open electronics section of cabinet (separate electronics section of cabinet from battery section of cabinet).

19. Verify that power and battery shelves are properly installed and tightly secured.

20. At front of battery section of cabinet, verify that battery shelves are free from defects (are not dented or twisted).

21. At rear of electronics section of cabinet, perform Steps **21** through **24**.

22. Verify that there is no broken or damaged equipment (connectors, wiring, backplane wiring board, etc). Resolve problems through local procedures.

23. Verify that there are no bent, broken, or crossed terminals on backplane. Resolve problems through local procedures.

24. Verify that all cabling and wiring are terminated and tied into forms. Resolve problems through local procedures.

25. Verify that plastic covers are placed behind dual bank assembly and power shelf. Resolve problems through local procedures.

26. Repeat these procedures from Step **8** for other equipment shelves [power shelf, battery shelves, multiplexer shelf, repeater shel(ves), etc.] in the RT enclosure. Keep in mind that you will need the appropriate plug-ins for the type of equipment shelf to check for misaligned shelf by installing a circuit pack (in an appropriate slot).

    **STOP. YOU HAVE COMPLETED THIS PROCEDURE.**

# Perform Overall Visual Inspection of *LGX*® Fiber Optic Distributing Frame (FTTH)

1. At front of *LGX* lightguide distribution frame verify that:
   - Duct doors have been installed on frame flanges and doors operate properly.
   - Termination and identification shelves are tightly secured and free of defects or damage.
   - Connector panels in termination and identification shelves are securely attached and are equipped with full complement of couplers.
   - Lightguide interconnect cables (LICs) are routed through jumper retainers located on both sides of frame.
   - *ST*® lightguide cable connectors on LIC fibers are securely attached to proper couplers on termination and identification shelves (per work order).
2. Verify that each fiber distribution cable is attached securely to the 12A1 cable clamps located on side of each shelf.
3. Verify that metal sheath on each distribution cable is properly grounded at 12A1 cable clamps.
4. Lower top of connector panel in each shelf and verify that each distribution fiber is terminated with an *ST* lightguide connector and that both ends of all unused optical couplings are equipped with protector plugs.
5. Verify that any unused LIC fibers are routed and stored in identification shelves.
6. Verify that frame ground wire has been securely attached between frame aisle ground lead and mounting flange on frame (Figure 1).
7. Verify that ground wire assembly between 12A1 cable clamps and bay frame is present and securely fastened (Figure 2).

**STOP. YOU HAVE COMPLETED THIS PROCEDURE.**

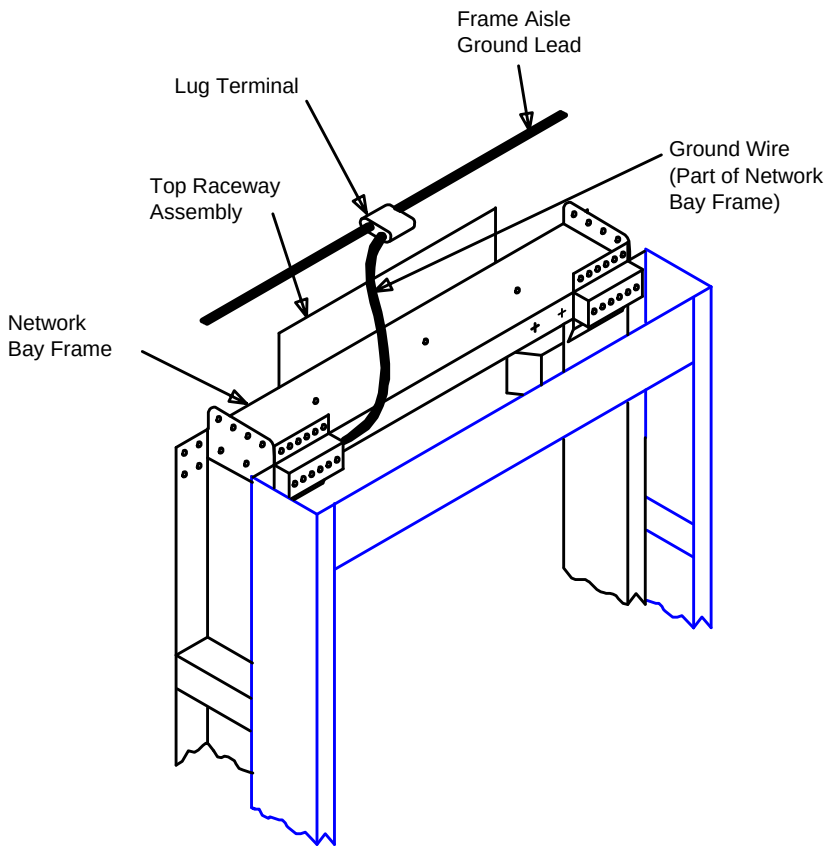


**Figure 1 – *LGX* Lightguide Distribution Frame Ground**

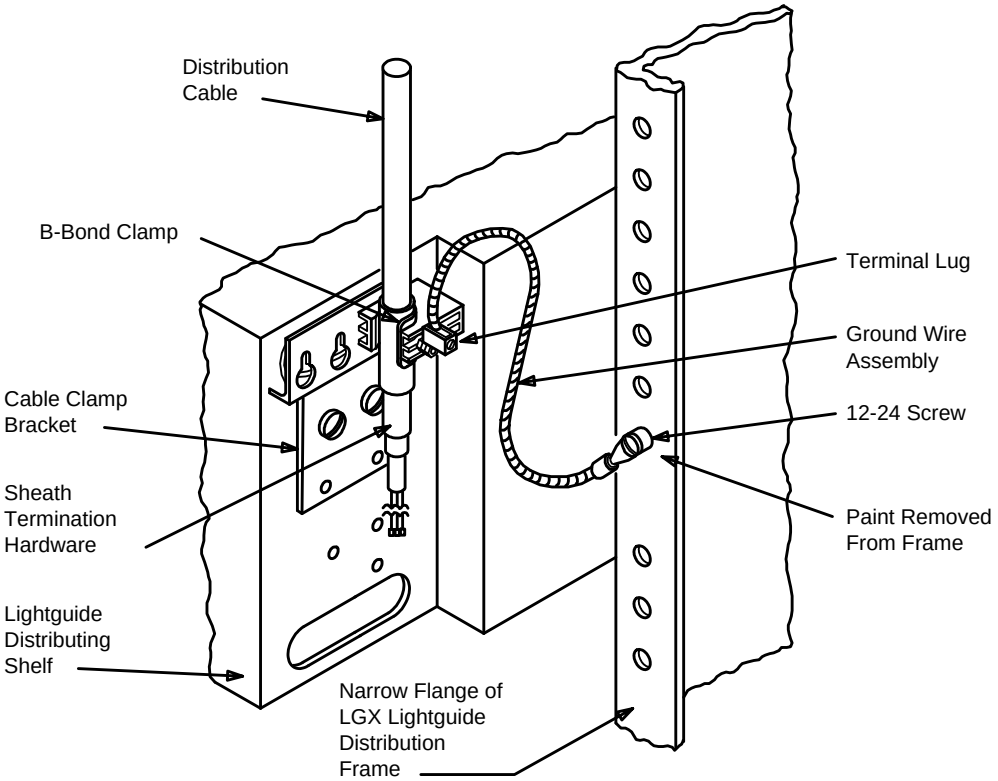


**Figure 2 – *LGX* Lightguide Distribution Frame 12A1 Clamp Ground**

# Visually Inspect AC Powering, Grounding, Copper Termination, and Fiber Termination at 900A1 Distant Terminal

1. Verify that 900A1 distant terminal (DT) closure, network interface unit (NIU), and AC power outlet have been properly mounted to wall of structure (Figure 1).

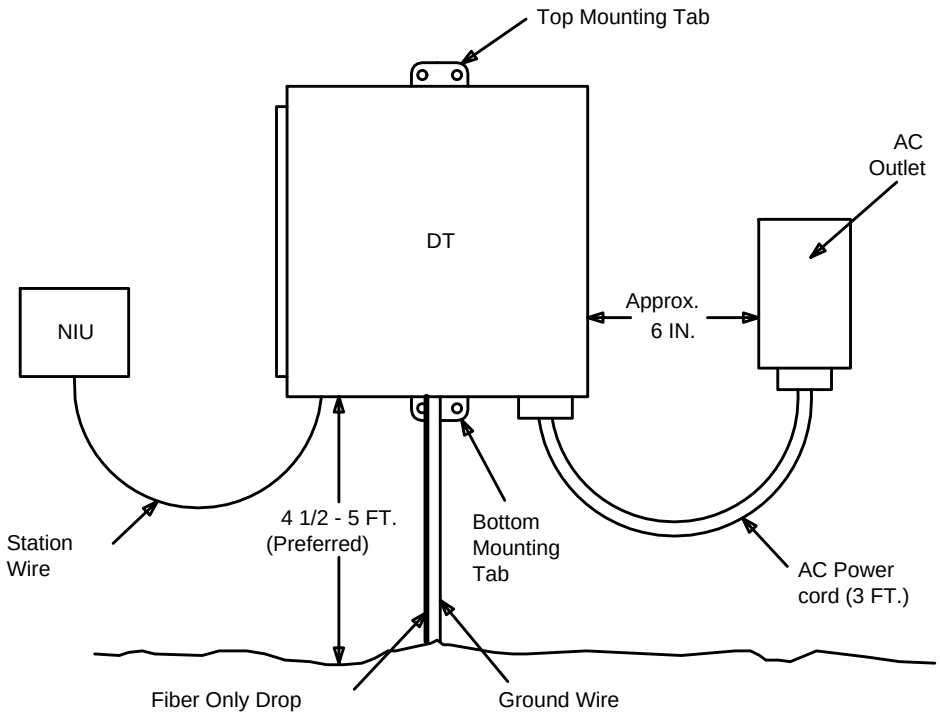


**Figure 1 – DT Equipment Arrangement**

2. Verify that AC power outlet enclosure is an approved lockable enclosure.

3. Verify that AC power outlet has been wired to an electrical circuit breaker; not to a ground fault circuit interrupter (GFCI).

4. Is 120 V AC present at AC outlet?

   If **YES,** then proceed to Step **8.**
   If **NO,** then continue with Step **5.**

5. Is circuit breaker that is providing power to AC outlet turned on?

   If **YES,** then proceed to Step **6.**
   If **NO,** then continue with Step **7.**

6. Resolve problem through local procedures.

7. Turn circuit breaker that is providing power to AC outlet to on position and repeat from Step **4**.

8. Verify that ground cable to 900A1 DT closure is secured by SLU35 connector (cable clamp) located in bottom of DT closure and that ground cable is routed and terminated to an approved ground connection.

9. Verify that NIU is grounded per instructions for the type of NIU being used.

10. Verify that fiber drop is terminated with an *ST*u®d lightguide cable connector that has been attached to optical unit backplane coupler. Also verify that excess fiber cable is stored in fiber retaining bracket.

11. Verify that fiber drop, including metal shield, is securely fastened to wire clamp and the wire clamp is securely attached to ground bracket in bottom of 900A1 DT closure.

12. Verify that copper pairs from 900A1 DT closure to NIU have been installed.

**STOP. YOU HAVE COMPLETED THIS PROCEDURE.**

# Visually Inspect AC Powering, Grounding, Copper Termination, and Fiber Termination at Collocated Distant Terminal Site

1. Verify that 900A1 distant terminal (DT) closures and AC circuit breaker box and power outlets have been properly mounted in the structure. (See Figures 1 and 2 if you have a low profile pedestal.)

2. Verify that each AC power outlet has been wired to an electrical circuit breaker; not to a ground fault circuit interrupter (GFCI).

3. Is 120 V AC present at each AC outlet?

   If **YES,** then proceed to Step **7.**
   If **NO,** then continue with Step **4.**

4. Is circuit breaker that is providing power to AC outlet turned on?

   If **YES,** then proceed to Step **6.**
   If **NO,** then continue with Step **5.**

5. Resolve problem through local procedures.

6. Turn circuit breaker that is providing power to AC outlet to on position and repeat from Step **3**.

7. Verify that ground cable to 900A1 DT closure is secured by SLU35 connector (cable clamp) located in bottom of DT closure and that ground cable is routed and terminated to an approved ground connection.

8. Verify that customer drop protectors are grounded per instructions for the type of panel being used.

9. For each DT, verify that fiber drop is terminated with an *ST*® lightguide cable connector that has been attached to optical unit backplane coupler. Also verify that excess fiber cable is stored in fiber retaining bracket.

10. Verify that fiber drop, including metal shield, is securely fastened to wire clamp and the wire clamp is securely attached to ground bracket in bottom of 900A1 DT closure.

11. Verify that copper pairs from 900A1 DT closures to customer drop protector panel have been installed.

**STOP. YOU HAVE COMPLETED THIS PROCEDURE.**

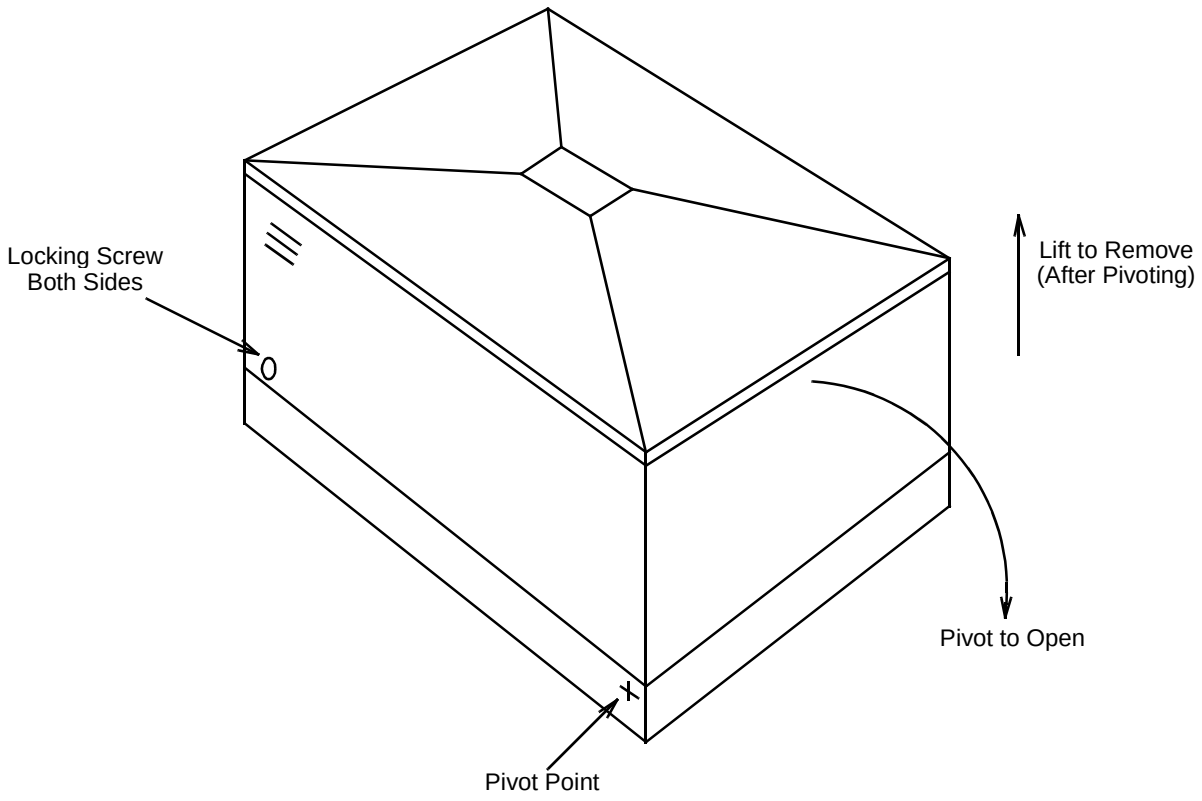


**Figure 1 – Low Profile Pedestal**

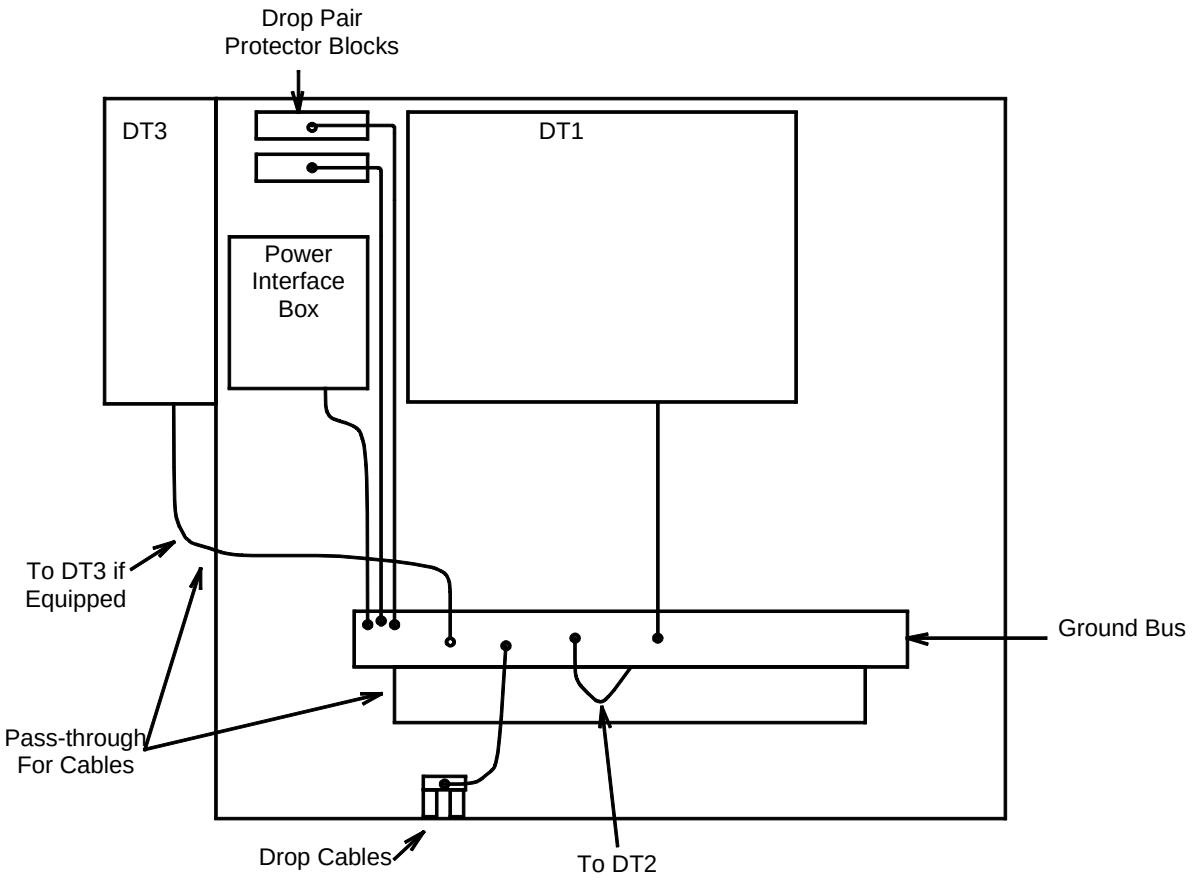


**Figure 2 – Low Profile Ground Connections — Block Diagram**

# Visually Inspect DC Powering, Grounding, Copper Termination, and Fiber Termination at 900A2 or 900A3 Distant Terminal

1. Use a 216C tool to open (loosen the lock nuts and pivot the top over) the pedestal containing 900A2, or 900A3 distant terminals (DTs) and DC power module. (Figure 1)

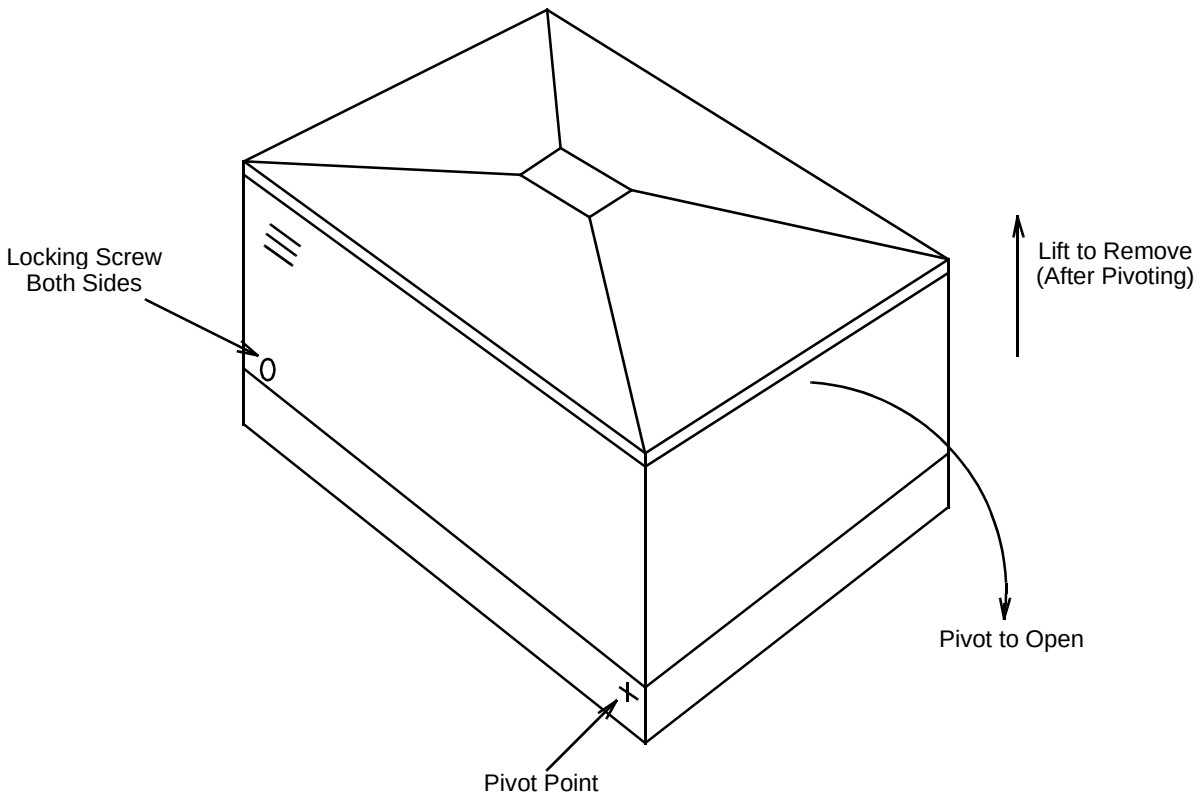


**Figure 1 – Low Profile Pedestal**

2. Verify that 900A2 or 900A3 DT closure, drop wire protector panel, splicing chamber, and DC power interface box have been properly mounted to wall of pedestal (Figure 2).

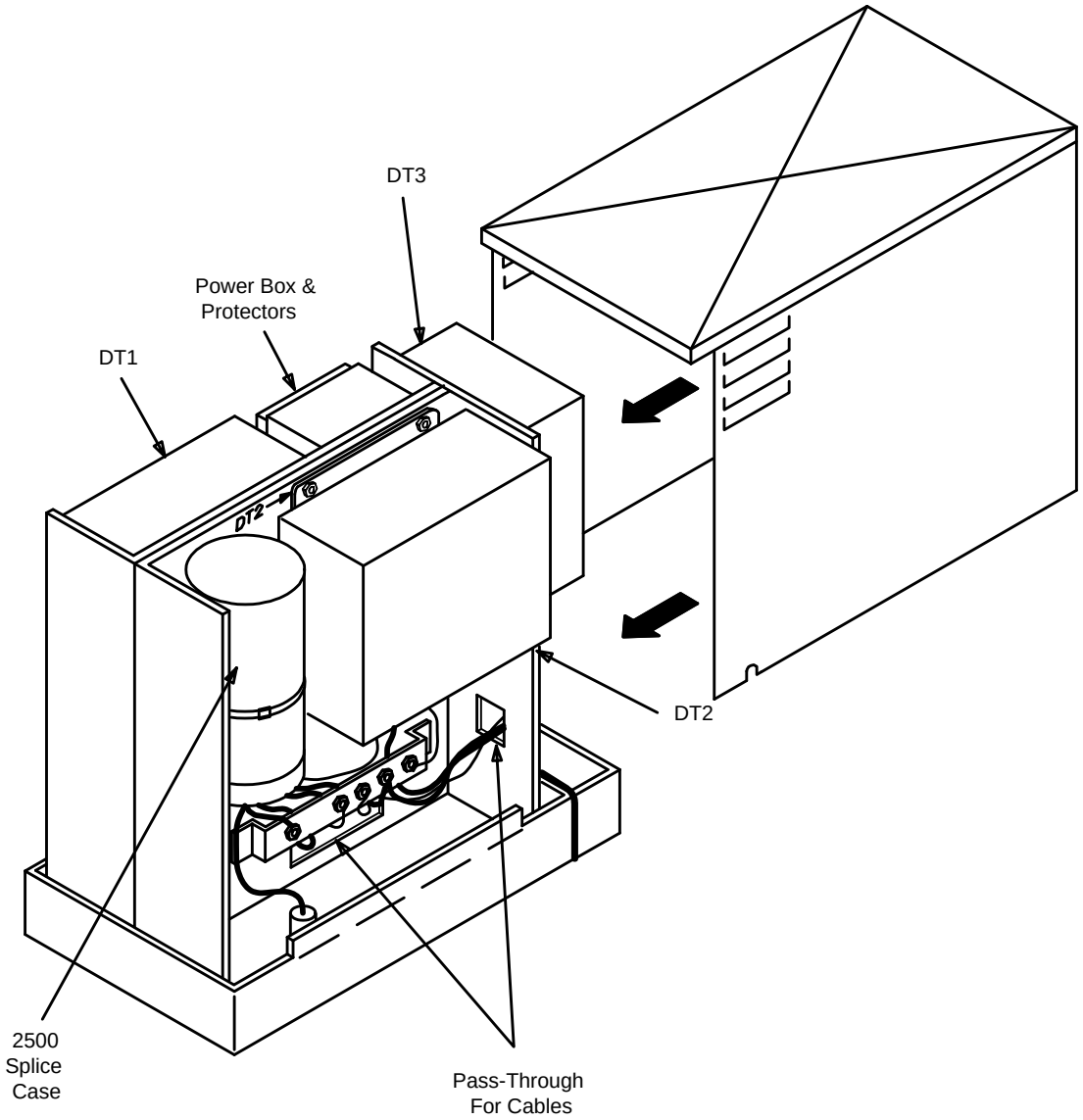


**Figure 2 – Low Profile Pedestal Equipment Arrangement**

3. Verify that the pedestal ground bus has been connected to an approved ground connection. (Figure 3)

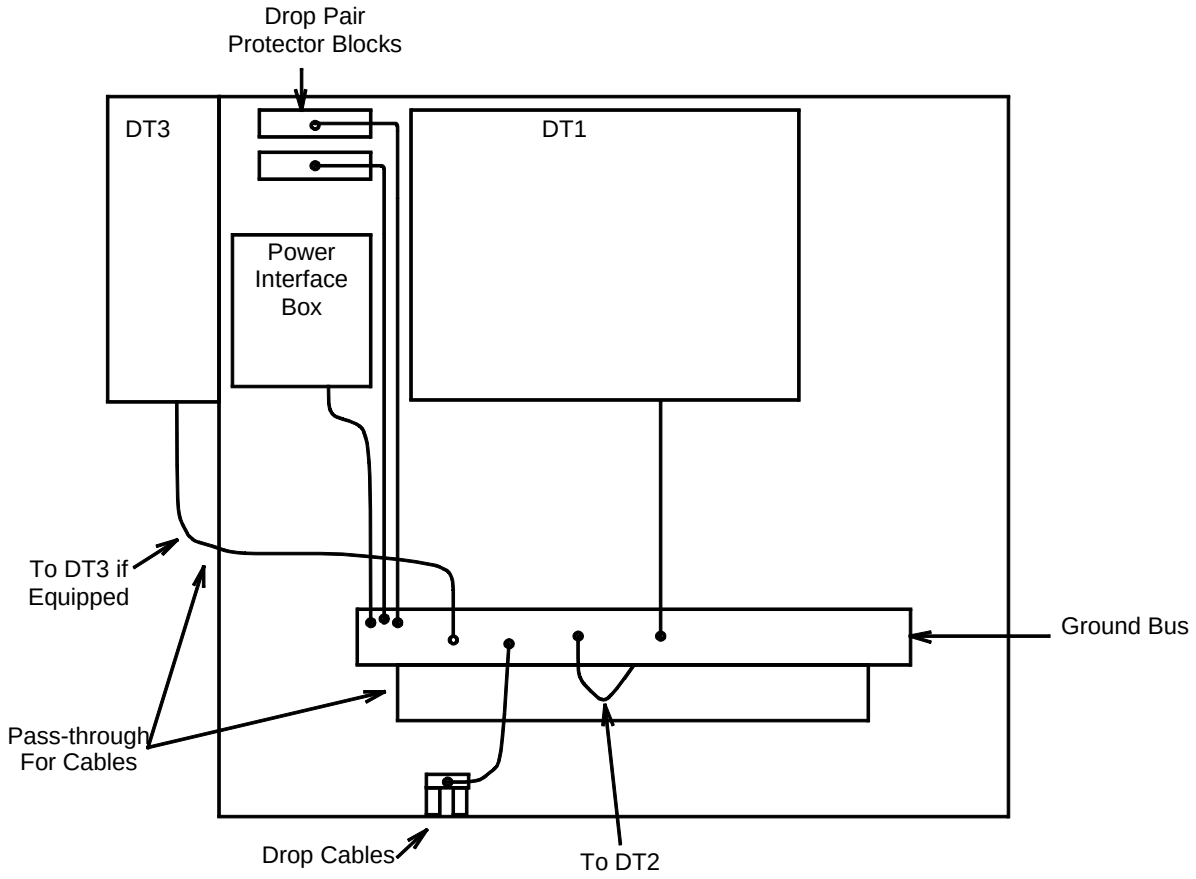


**Figure 3 – DT Pedestal Ground Connections — Block Diagram**

4. Open DT and verify that ground cable to 900A2 or 900A3 DT closure is secured by SLU35 connector (cable clamp) located in bottom of DT closure and that ground cable is routed and terminated to the ground bus in the pedestal.

   Comment: DT power cord connections, DC power protector installation, and DC power pair connections can be made on an "as required basis".

5. Verify that drop wire protector panel is grounded to the pedestal ground bus per instructions for the type of panel being used.

6. Verify that fiber drop is terminated with an *ST*u®d lightguide cable connector that has been attached to optical unit backplane coupler. Also verify that excess fiber cable is stored in fiber retaining bracket.

7. Verify that fiber drop, including metal shield, is securely fastened to wire clamp and the wire clamp is securely attached to ground bracket in bottom of 900A2 or 900A3 DT closure.

8. Verify that copper pairs from 900A2 or 900A3 DT closure to drop wire protector panel have been installed.

9. Remove cover to DC power interface by loosening the screw at the bottom of the box, sliding the bottom out, and pushing down.

10. Verify the installation of, or install (first connect the ground wire then slide the pack into place and tightening the retaining screws), the DC power interface circuit pack (Figure 4). Ensure the DC power interface retaining screws are tight and the ground wire is attached between one of the screws on the back of the DC power interface circuit pack and the pedestal ground bus.

11. Verify that the DT(s) power cord has been connected to the DC power interface circuit pack (Figure 4).

**STOP. YOU HAVE COMPLETED THIS PROCEDURE.**

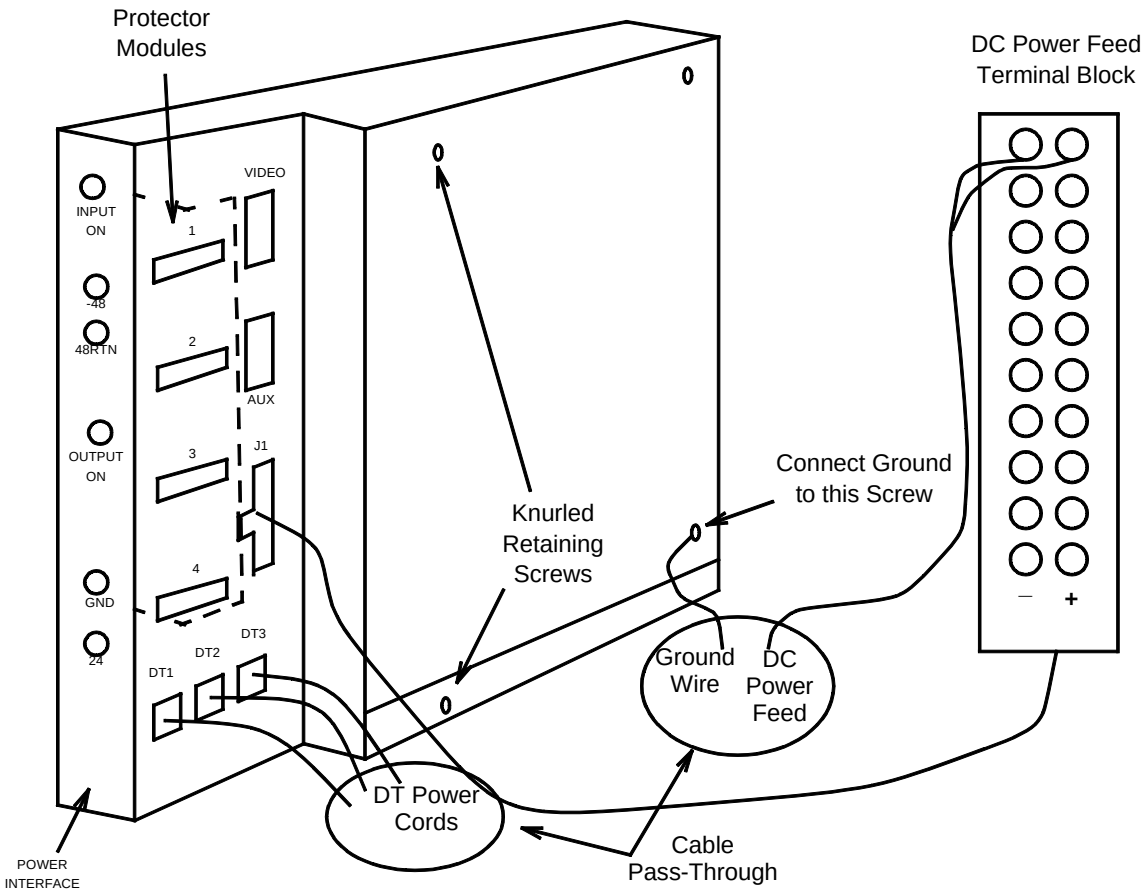


**Figure 4 – DC Power Interface Wiring Connections**

# Turn Up Power Plant for Series 5 RT

# Introduction

## Introduction

This Tab provides procedures to equip and power up the various types of power shelves used in *SLC*® Series 5 carrier system remote terminal (RT) enclosures. The procedures include installation of batteries, rectifier units, battery charger units, and ringing generator units. The purpose of these procedures is to provide power and ringing current prior to the turnup of the *SLC* Series 5 carrier system dual RT channel bank Assembly. Procedures to add battery strings to an equipped RT enclosure are included.

New bulk power cabinets may be equipped with 4A fan units. The 4A fan has a built in control unit and does not require the AUA24 Fan Control Unit (FCU) in the RT channel bank. The 4A fan unit will be functional when the power shelf is equipped. This Tab section provides procedures to test the 4A fan.

**NOTE:**
The discontinued availability 80C cabinet (Phase 0) used *SLC* 96 1B (1A) power and jack panel, 3B battery charger, and 128A apparatus mounting battery shelves. Refer to 363-202-401 to establish power for this equipment.

The following is a list of currently available power and ringing equipment:

**J1C182BA - Distributed Power Shelf**

This power shelf can be in 51A cabinets, 80-type cabinets, 90-type cabinets, and frame RT enclosures.

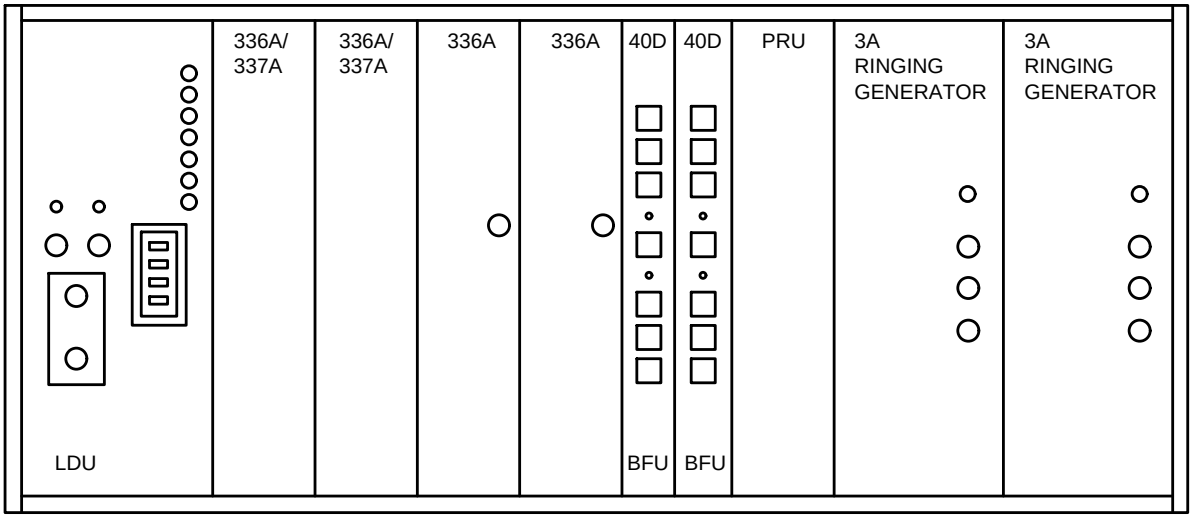


**Figure 1 – J1C182BA Power Shelf**

The J1C182BA power shelf (Figure 1) requires the following equipment:

- 181A or 181B apparatus mounting shelf equipped with 4 KS-21906, L4 battery strings (up to 6).
- 366A rectifier units (up to 4).
- 337A battery charger. The 377A is mounted in the J1C182BA power shelf only for 51A cabinets (up to 2). For all other applications the 337A battery charger is mounted in the 181A or 181B apparatus mounting shelf.
- ED-7C613-30 load distribution unit (LDU) (1 required).
- Bank fuse unit (AUG11 BFU or 40D BFU) (up to 2, 1 for each dual channel bank).
- 3A, 3B, 3C, or 3C1 ringing generator (up to 2).
- AUG1 positive ringing unit (PRU) (1 only if positive ringing current is required for multiparty service).

## J1C182BB - Bulk Power Shelf

This power shelf can be in RT frame enclosures (such as a mini hut or CEV) with a -48 Volt battery plant.

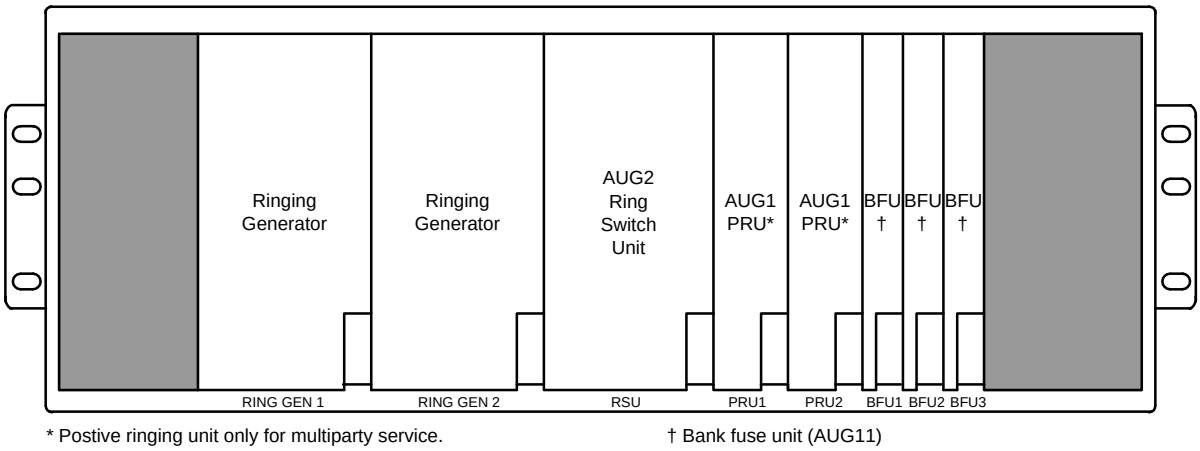


**Figure 2 – J1C182BB Power Shelf**

The J1C182BB power shelf (Figure 2) requires the following equipment:

- Bank fuse unit (AUG11 BFU or 40D BFU) (up to 3, 1 for each dual channel bank).
- 3A, 3B, 3C, or 3C1 Ringing Generator (up to 2).
- AUG2 ring switch unit (RSU) (1 required).
- AUG1 positive ringing unit (PRU) (up to 2 only if positive ringing current is required for multiparty service).

## J1C182BD - bulk power plant

This power shelf is used in 80A cabinets.

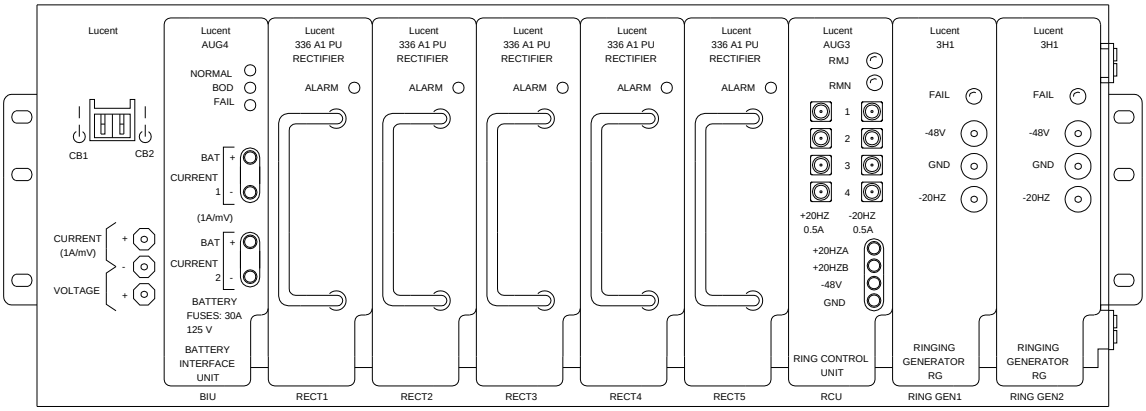


**Figure 3 – J1C182BD Power Plant**

The J1C182BD power shelf (Figure 3) requires the following equipment:

- Two battery strings mounted at the bottom of the 80A cabinet on battery heaters.
- Battery controller (1 required).
- 3H1 ringing generator (2 required) (functionally equivalent to the 3C1 Ringing Generator).
- Ring control unit (RCU) (1 required).
- 336A rectifier (5 required).

## J1C182PB-1 - Optical Power Shelf

This power shelf is used with Fiber to the Home equipment in a frame fed by -48 Volt power plant or 80E Bulk Powered cabinet.

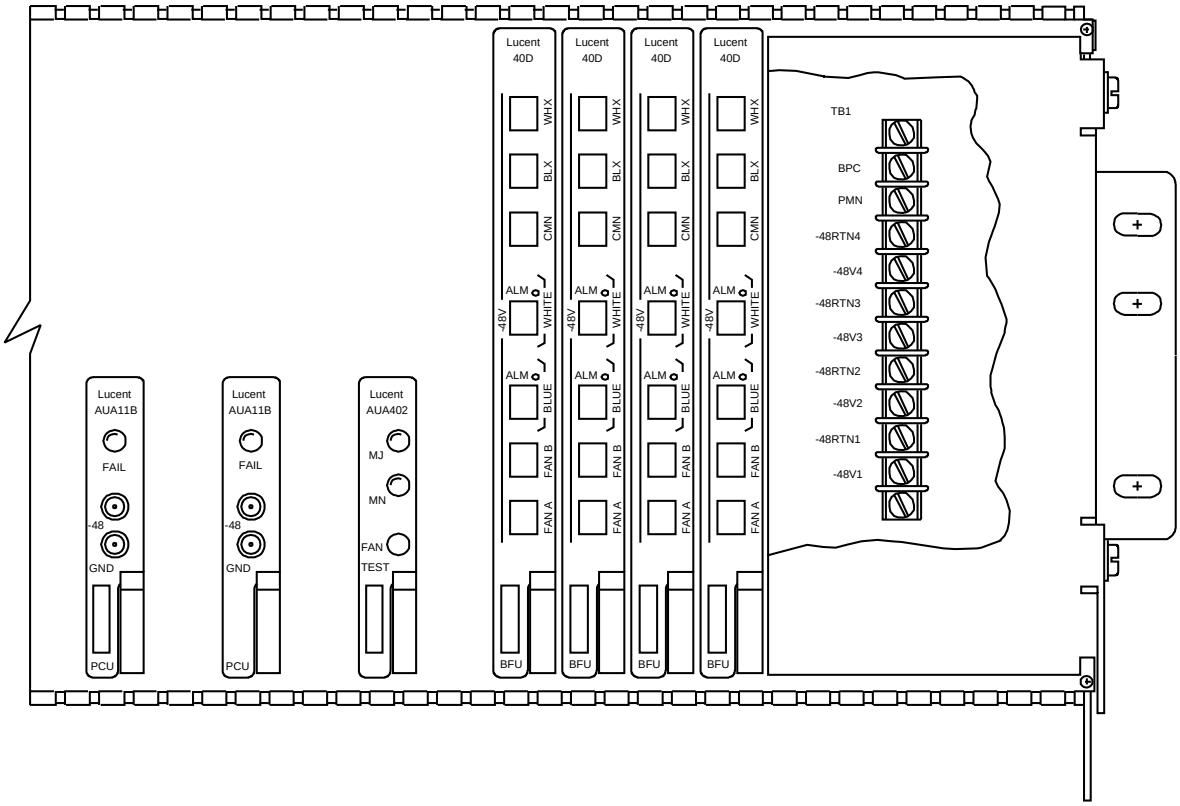


**Figure 4 – Right half of J1C182PB-1 Optics Power Shelf**

The J1C182PB-1 power shelf (Figure 4) requires the following equipment:

- 4 bank fuse units (AUG11 BFU or 40D BFU, 1 for each equipped dual channel bank).
- 8 power converter units (AUA11B PCU or AUA11C PCU, 2 for each equipped optical shelf).
- 1 Alarm/Fan control unit (AUA402 A/FCU).

## ED7C704-30 OLS Rectifier Shelf

This power shelf is used in 80E or 80D bulk power cabinets, along with the J1C182BC ring shelf (non-FTTH) and a central interconnect panel.

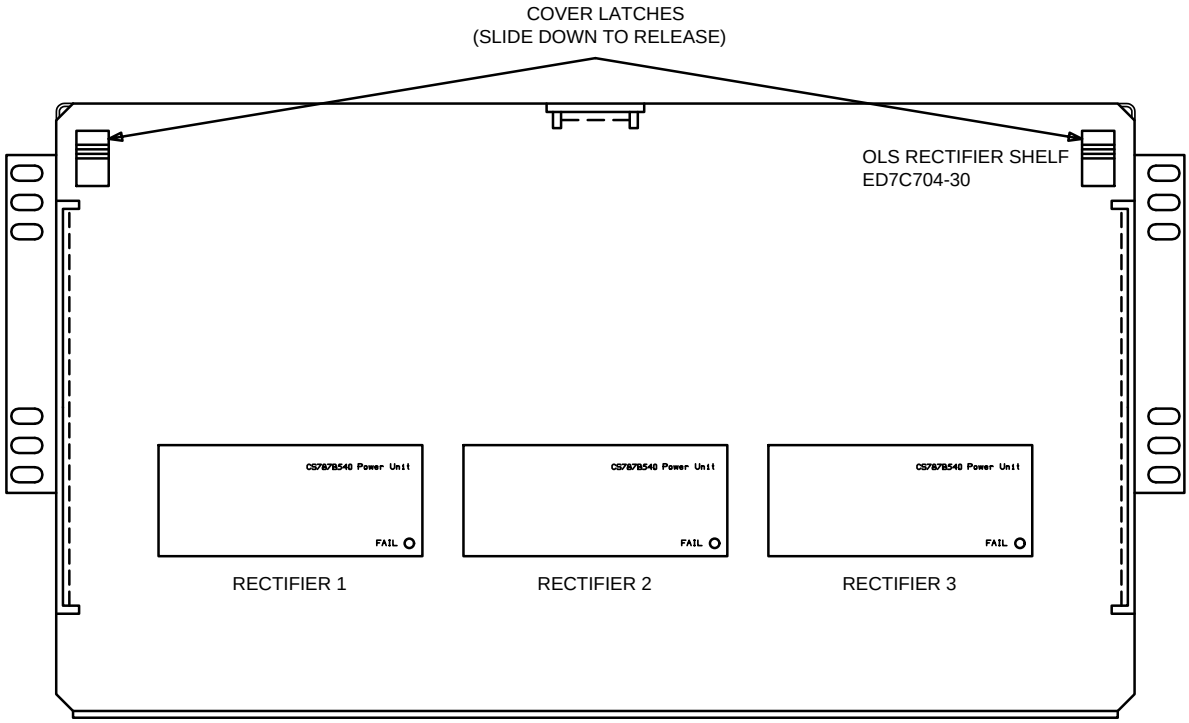


**Figure 5 – ED-7C704-30 Rectifier Shelf (With Cover)**

The ED7C704-30 OLS (Figure 5) requires the following equipment:

- 2 or 3 *Chloride*[*] or Lineage VR Series Battery strings at the bottom of the cabinet mounted on heaters.
- 2 or 3 CS787B540 power units.

*. Registered trademark of Chloride Group, Plc.

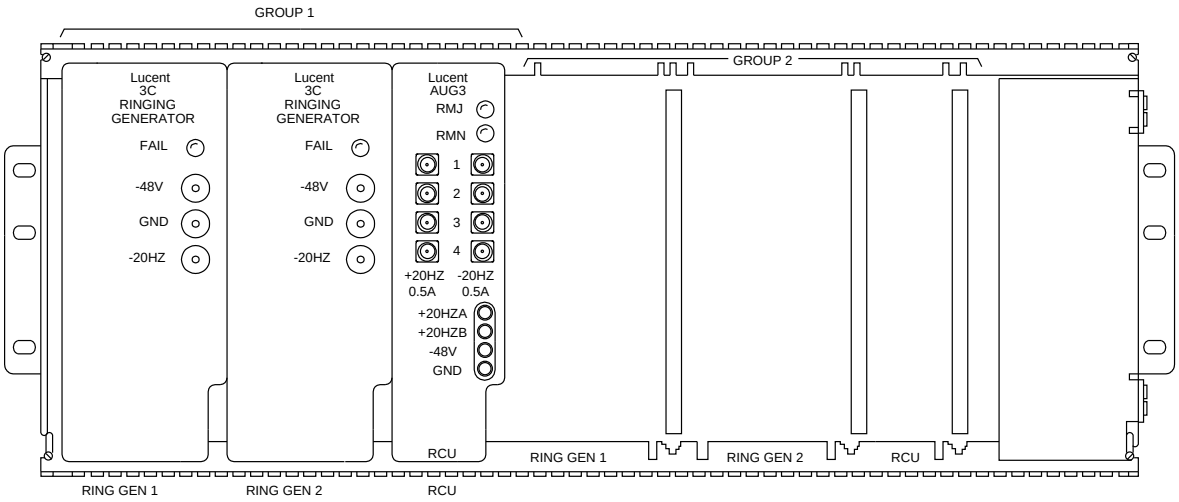


**Figure 6 – Ringing Generator Installed in J1C182BC Ring Shelf**

The J1C182BC (Figure 6) requires the following equipment:

- 2 3C1 Ringing Generators (3B1 for 30 Hz).
- 1 ring control unit (AUG3 RCU).
- a second compliment of 1 AUG3 RCU and 2 3C ringing generators for split shelf ring supply.

# Power Up Cabinet or Frame Power Plant Task Index List

## FIND YOUR JOB IN THE LIST BELOW . . . . . THEN GO TO

**NOTE:**
When turning up a *SLC* Series 5 Carrier System RT power shelf you must initially accept the RT equipment as directed in Acceptance TAB procedures.

Acceptance . . . . . NTP-002
Add Battery Equipment to J1C182BA Power Shelf In Frame, 51, 80, or 90-Type Cabinet RT . . . . . NTP-004
Check 4A Fan Unit OperationDLP-536
Turn Up J1C182BA Power Shelf and Supporting Equipment In Frame, 51, 80, or 90-Type Cabinet RT . . . . . NTP-003
Turn Up J1C182BB Bulk Power Shelf and Supporting Equipment in RT Frame . . . . . NTP-005
Turn Up J1C182BD Power Shelf In 80A Cabinet . . . . . NTP-006
Turn Up ED-7C704-30 Bulk Power Plant in 80D or 80E Cabinet . . . . . NTP-007
Turn Up J1C182PB-1 Optics Power Shelf . . . . . NTP-008

CAUTION:
*In dusty areas (for example, near construction sites), Lucent Technologies recommends tenting the RT cabinet to protect electronic equipment whenever cabinet doors are open for extended periods.*

# Acceptance

## GENERAL

Acceptance tests are performed to ensure proper installation procedures have been performed. The acceptance procedures are found in the Acceptance Tab of this document. These procedures should be done before the equipment is turned up.

# Turn Up J1C182BA Power Shelf and Supporting Equipment in Frame, 51, 80, or 90-Type Cabinet RT

| DO ITEMS BELOW IN ORDER LISTED | FOR DETAILS, GO TO |
|---|---|

1.

**NOTE:**
This procedure provides steps for the initial installation of the J1C182BA power shelf and supporting equipment. This procedure assumes the following:

- The outside cable pairs are not closed through to the RT so that the RT is isolated from the digital and derived lines.
- The frame, 51,80, or 90-type cabinet housing the RT has been installed.
- The J1C182AB or J1C182AE dual channel bank assembly has been installed in the frame or cabinet enclosure.
- The miscellaneous pair panel, protector connectors, power shelf, fan shelves, and battery shelves (if required) have been installed in the frame or cabinet enclosure.
- The acceptance Tab procedures in this volume have been performed.

This procedure contains instructions concerning the installation of the various supporting units into the RT assembly shelves, battery shelves (if required), and power shelf, and for verifying that the units are operating properly.

| DO ITEMS BELOW IN ORDER LISTED | FOR DETAILS, GO TO |
|---|---|

2. Get Support Apparatus Listed:
   - 216-type tool (80-type cabinet only),
   - Special key (allen-type wrench) - COMCODE 846244168 (51-type and 80-type cabinets only),
   - DMM (digital multimeter) with an accuracy of 1.0% and an ac/dc input impedance of ≥ 1 megohm.
   - One **AUA11( ) PCU** (power converter unit).

3. **CAUTION:**
   *An electrostatic discharge wrist strap with a minimum resistance of 250K Ohms should be worn when handling Series 5 circuit packs to prevent possible damage to the circuit packs. Before using the wrist strap, check it for opens, shorts, and minimum resistance value. If the strap does not pass these checks it should not be used. To avoid possible personal injury while using the wrist strap, do not connect it to the power shelf or adjacent portions of the RT frame. Connect the wrist strap to **ESD GRD** jack on the fan unit, if present. If grounding jack is not present, connect wrist strap to bare-metal section of the frame well away from the power shelf.*

   Verify AC power panel connections for power shelf has been made and turn on circuit breaker(s). — DLP-500

4. Install **LDU** (load distribution unit) in power shelf. — DLP-501

5. If RT backup power is from **337A BATTERY CHARGER**(s)/KS-21906, L4 battery packs, continue with Step **6**. Otherwise, proceed to Step **9**.

| DO ITEMS BELOW IN ORDER LISTED | FOR DETAILS, GO TO |
|---|---|
| 6. Perform initial installation tests of RT batteries; | |
| A. in Frame-type RT, 80-type CSC (community service cabinet), or 90-type cabinet (ED-7C621-30, ED-97977-30, or ED-7C699-30) RT. | DLP-502 |
| B. in 51-type (ED-7C601-30) cabinet RT. | DLP-503 |
| 7. **NOTE:** Batteries must have been on charge for at least 48 hours before testing with **197A BATTERY LOAD TEST SET**. If batteries have just been put on charge, the remainder of this procedure may be performed and batteries can be tested at a later date. | |
| Perform test of RT batteries using **197A BATTERY LOAD TEST SET**. | DLP-504 |
| 8. **NOTE:** One battery charger is required per battery string. | |
| Install **337A BATTERY CHARGER**s; in Frame-type RT, 80-type CSC (community service cabinet), 90-type cabinet (ED-7C621-30, ED-97977-30, or ED-7C699-30), or 51-type (ED-7C601-30) RT cabinet. | DLP-505 |
| 9. Install **336A RECTIFIER**s in power shelf. | DLP-506 |
| 10. Perform battery charger test (if battery chargers are utilized for backup power). | DLP-507 |
| 11. Install **3C RINGING GENERATOR**s in power shelf. | DLP-508 |

| DO ITEMS BELOW IN ORDER LISTED | FOR DETAILS, GO TO |
|---|---|
| 12. **NOTE:** The **AUG1 PRU** is required only if multiparty channel units that require positive ringing current are to be installed in the dual bank assemblies.<br><br>Install **AUG1 PRU** in power shelf (if required). | DLP-509 |
| 13. Install (if not previously installed) and check fuses in **BFU** (bank fuse unit) in power shelf. | DLP-510 |
| 14. If powering a SLC Series 5 RT dual channel bank, continued with Step **15**. Otherwise, proceed to Step **17**. | |
| 15. Install and test **PCU** (power converter unit) in facility shelf. | DLP-511 |
| 16. Remove **PCU**. Repeat previous Step for each new dual channel bank assembly. | |
| 17. Update records to indicate that RT supporting equipment has been installed. When required, perform RT Turn Up TAB procedures for the appropriate Feature Package. | |

# Add Battery String Equipment to J1C182BA Power Shelf in Frame, 51, 80, or 90-Type Cabinet RT

| DO ITEMS BELOW IN ORDER LISTED | FOR DETAILS, GO TO |
|---|---|

1.

**NOTE:**
This procedure provides steps for adding supporting equipment (battery strings, rectifiers, battery chargers, and BFUs) to J1C182BA power shelf. This procedure assumes the following:

- The procedures to initially equip the J1C182BA power shelf has been done.
- The outside cable pairs are not closed through to the RT so that the RT is isolated from the digital and derived lines.
- The J1C182AB or J1C182AE dual channel bank assembly has been installed in the frame or cabinet enclosure.
- The miscellaneous pair panel, protector connectors, power shelf, fan shelves, and battery shelves (if required) have been installed in the frame or cabinet enclosure.
- The acceptance Tab procedures in this volume have been performed.

This procedure contains instructions concerning the installation of the various supporting units into the RT assembly shelves, battery shelves (if required), and power shelf, and for verifying that the units are operating properly.

| DO ITEMS BELOW IN ORDER LISTED | FOR DETAILS, GO TO |
|---|---|

2. Get Support Apparatus Listed:
   - 216-type tool (80-type cabinet only),
   - Special key (allen-type wrench) - COMCODE 846244168 (51-type and 80-type cabinets only),
   - DMM (digital multimeter) with an accuracy of 1.0% and an ac/dc input impedance of ≥ 1 megohm.
   - One **AUA11( ) PCU** (power converter unit).

---

3. **CAUTION:**
   *An electrostatic discharge wrist strap with a minimum resistance of 250K Ohms should be worn when handling Series 5 circuit packs to prevent possible damage to the circuit packs. Before using the wrist strap, check it for opens, shorts, and minimum resistance value. If the strap does not pass these checks it should not be used. To avoid possible personal injury while using the wrist strap, do not connect it to the power shelf or adjacent portions of the RT frame. Connect the wrist strap to ESD GRD jack on the fan unit, if present. If grounding jack is not present, connect wrist strap to bare-metal section of the frame well away from the power shelf.*

   Verify AC power panel connections for power shelf has been made and turn on circuit breaker(s). — DLP-500

---

4. Perform RT battery installation;

---

   A. in Frame-type RT, 80-type CSC (community service cabinet), or 90-type cabinet (ED-7C621-30, ED-97977-30, or ED-7C699-30) RT. — DLP-512

   B. in 51-type (ED-7C601-30) cabinet RT. — DLP-513

| DO ITEMS BELOW IN ORDER LISTED | FOR DETAILS, GO TO |
|---|---|
| 5. **NOTE:** Batteries must have been on charge for at least 48 hours before testing with **197A BATTERY LOAD TEST SET**. If batteries have just been put on charge, the remainder of this procedure may be performed and batteries can be tested at a later date.<br><br>Perform test of RT batteries using **197A BATTERY LOAD TEST SET**. | DLP-504 |
| 6. **NOTE:** One battery charger is required per battery string.<br><br>Install **337A BATTERY CHARGER**s in Frame-type RT, 80-type CSC (community service cabinet), 90-type cabinet (ED-7C621-30, ED-97977-30, or ED-7C699-30), or 51-type (ED-7C601-30) cabinet RT. | DLP-514 |
| 7. If adding AC rectifiers to an existing system, continue with Step **8**. Otherwise, proceed to Step **9**. | |
| 8. Install **336A RECTIFIER**s in power shelf. | DLP-515 |
| 9. Install (if not previously installed) and check fuses in second **BFU** (bank fuse unit) in power shelf. | DLP-510 |
| 10. If powering a SLC Series 5 RT dual channel bank, continue with Step **11**. Otherwise, proceed to Step **13**. | |
| 11. Install and test **PCU** (power converter unit) in facility shelf. | DLP-511 |
| 12. Remove **PCU**. Repeat previous Step for each new dual channel bank assembly. | |
| 13. Update records to indicate that RT supporting equipment has been installed. When required, perform RT Turn Up procedures for the appropriate Feature Package. | |

# Turn Up J1C182BB Bulk Power Shelf and Supporting Equipment in RT Frame

| DO ITEMS BELOW IN ORDER LISTED | FOR DETAILS, GO TO |
|---|---|

1.

**NOTE:**
This procedure assumes the following:

- The outside cable pairs are not closed through to the RT so that the RT is isolated from the digital and derived lines.
- The frame housing the RT has been installed.
- The J1C182AB or J1C182AE dual channel bank assembly has been installed in the frame.
- The miscellaneous pair panel, protector connectors, power shelf, fan shelves, and battery shelves (if required) have been installed in the frame.
- The acceptance procedures in this volume have been performed.

This procedure contains instructions concerning the installation of the various supporting units into the RT assembly shelves, battery shelves (if required), and power shelf, and for verifying that the units are operating properly.

2. Get Support Apparatus Listed:

- DMM (digital multimeter) with an accuracy of 1.0% and an ac/dc input impedance of ≥ 1 megohm.
- One **AUA11( ) PCU** (power converter unit).

| DO ITEMS BELOW IN ORDER LISTED | FOR DETAILS, GO TO |
|---|---|

3.

**CAUTION:**
*An electrostatic discharge wrist strap with a minimum resistance of 250K Ohms should be worn when handling Series 5 circuit packs to prevent possible damage to the circuit packs. Before using the wrist strap, check it for opens, shorts, and minimum resistance value. If the strap does not pass these checks it should not be used. To avoid possible personal injury while using the wrist strap, do not connect it to the power shelf or adjacent portions of the RT frame. Connect the wrist strap to ESD GRD jack on the fan unit, if present. If grounding jack is not present, connect wrist strap to bare-metal section of the frame well away from the power shelf.*

**NOTE:**
The term "facility shelf" is used throughout this procedure to refer to the middle shelf of the Series 5 RT. The remaining shelves will be referenced according to digroup name (e.g., AB shelf contains digroups A and B). White system refers to the two upper shelves of the Series 5 RT plus the right half of the facility shelf and blue system refers to the two lower shelves of the Series 5 RT plus the left half of the facility shelf.

| | |
|---|---|
| Install (if not previously installed) **RSU** (ring switch unit) in bulk power shelf. | DLP-516 |

| DO ITEMS BELOW IN ORDER LISTED | | FOR DETAILS, GO TO |
|---|---|---|
| 4. | **NOTE:** One **BFU** is required for each partially or fully equipped dual bank assembly in the frame. If adding to an existing RT dual bank assembly, an additional **BFU** is not required.<br><br>Install and check fuses in **BFU** (bank fuse unit) in bulk power shelf, if necessary. | DLP-510 |
| 5. | Install (if not previously installed) **3C RINGING GENERATOR** in bulk power shelf. | DLP-517 |
| 6. | **NOTE:** The **AUG1 PRU** is required only if multiparty channel units that require positive ringing current are to be installed in any of the dual bank assemblies served by the bulk power shelf. One **PRU** is required for one or two dual bank assemblies containing multiparty channel units. A second **PRU** is required when the bulk power shelf serves three dual bank assemblies containing multiparty channel units that require positive ringing current.<br><br>Install (if not previously installed) **AUG1 PRU** in bulk power shelf (if required). | DLP-518 |
| 7. | Install and test **PCU** (power converter unit) in facility shelf. | DLP-511 |
| 8. | Remove **PCU**. Repeat previous Step for each new dual channel bank assembly. | |
| 9. | Update records to indicate that RT supporting equipment has been installed. When required, perform RT Turn Up procedures for the appropriate Feature Package. | |

# Turn Up J1C182BD Power Shelf in 80A Cabinet

| DO ITEMS BELOW IN ORDER LISTED | FOR DETAILS, GO TO |
|---|---|

1.

**NOTE:**
This procedure provides steps for the initial installation of the J1C182BD power shelf and supporting equipment in an 80A-type cabinet.

This procedure assumes the following;

- The outside cable pairs are not connected through to the RT (protectors not installed) so that the RT is isolated from the digital lines and derived pairs.
- The cabinet housing the RT has been installed.
- The applicable acceptance Tab procedures in this volume have been performed.

This procedure contains instructions concerning the installation of batteries into the cabinet and the various units into the J1C182BD power shelf assembly, and for verifying that the units are operating properly prior to turning up RT channel banks or other carrier facility shelf equipment.

2. Get support apparatus listed:

- 216-type tool,
- Special key (modified hex key) - COMCODE 846244168,
- DMM (digital multimeter) with an accuracy of 0.02% and an AC/DC input impedance of ≥ 1 megohm,
- Permanent marker or equivalent (for battery installation).
- One **AUA11( ) PCU** (power converter unit).

| DO ITEMS BELOW IN ORDER LISTED | FOR DETAILS, GO TO |
|---|---|
| 3. **CAUTION:** *An electrostatic discharge wrist strap with a minimum resistance of 250K Ohms should be worn when handling Series 5 circuit packs to prevent possible damage to the circuit packs. Before using the wrist strap, check it for opens, shorts, and minimum resistance value. If the strap does not pass these checks it should not be used. To avoid possible personal injury while using the wrist strap, do not connect it to the power shelf or adjacent portions of the RT frame. Connect the wrist strap to ESD GRD jack on the fan unit, if present. If grounding jack is not present, connect wrist strap to bare-metal section of the frame well away from the power shelf.* | |
| 4. Open Cabinet using 216-tool and Hex Key. Verify the AC circuit breaker is on and power shelf is plugged in. | DLP-500 |
| 5. Verify four 30 amp fuses are installed on the **AUG4 BIU** (battery interface unit) and install in power shelf **BIU** slot. | |
| 6. Install up to five **336A** Rectifiers in power shelf. | DLP-519 |
| 7. Install two **3H1 RINGING GENERATOR**s in power shelf. | DLP-521 |
| 8. Install **RCU** (ring control unit) in power shelf. | DLP-520 |
| 9. **NOTE:** Batteries are shipped directly from manufacturer. Install and test RT batteries in 80A cabinet skirt. | |
| A. Chloride batteries | DLP-522 |
| B. Lineage 2000 VR Series batteries | DLP-523 |

| DO ITEMS BELOW IN ORDER LISTED | FOR DETAILS, GO TO |
|---|---|
| 10. Turn on each power shelf DC circuit breaker and verify that they do not trip. If a circuit breaker does trip, cabinet wiring trouble must be cleared before continuing. | |
| 11. Turn off AC circuit breaker and verify **BOD** on **AUG4 BIU** and **ALARM** on **336A** indicators light (may take up to 5 minutes). Replace unit if indicator does not light. | |
| 12. If the power shelf powers an RT dual channel bank, continue with Step **13**. Otherwise, proceed to Step **15**. | |
| 13. Install and test **PCU**, then remove **PCU**; in dual RT channel bank facility (middle) shelf. | DLP-511 |
| 14. Repeat Steps **13** for each RT channel bank. Then continue with Step **15**. | |
| 15. Turn on AC circuit breakers. | |
| 16. Update office records. | |

# Turn Up ED-7C704-30 Bulk Power Plant in 80E or 80D Cabinet

| DO ITEMS BELOW IN ORDER LISTED | FOR DETAILS, GO TO |
|---|---|

1. This procedure provides steps for the initial installation of the battery strings, CS7787B540 power units in the Rectifier shelf, and the ringing generator units in the J1C182BC Ring Shelf (non-FTTH) in an 80D or 80E-type cabinet equipped with the ED-7C704-30 Bulk Power Plant.

   This procedure assumes the following;

   - The outside cable pairs are not connected through to the RT (protectors not installed) so that the RT is isolated from the digital lines and derived pairs.
   - The cabinet housing the RT has been installed.
   - The J1C182AE or J1C182AF dual channel bank assemblies (up to 8) have been installed in the cabinet.
   - The Optical Power shelf, for FTTH only, has been installed in the cabinet.
   - The miscellaneous pair panel, protector connectors, ring shelf, power unit (rectifier) shelf, control and distribution panel, and fan shelves have been installed in the cabinet.
   - The applicable acceptance TAB procedures in this volume have been performed.

   This procedure contains instructions concerning the installation of batteries into the cabinet and the various units into the RT assembly shelves, ring shelf, rectifier shelf, verifying that the units are operating properly, and verify power feds to all equipment bays in the cabinet prior to turning up RT channel banks or other carrier facility shelf equipment.

## DO ITEMS BELOW IN ORDER LISTED FOR DETAILS, GO TO

2. Get support apparatus listed:
   - 216-type tool,
   - Special key (modified hex key) - COMCODE 846244168,
   - DMM (digital multimeter) with an accuracy of 0.02% and an ac/dc input impedance of ≥ 1 megohm,
   - Permanent marker or equivalent (for battery installation).
   - One **AUA11( ) PCU** (power converter unit, AUA11B or later version required for optics power shelf).

---

3. **CAUTION:**
   *An electrostatic discharge wrist strap with a minimum resistance of 250K Ohms should be worn when handling Series 5 circuit packs to prevent possible damage to the circuit packs. Before using the wrist strap, check it for opens, shorts, and minimum resistance value. If the strap does not pass these checks it should not be used. To avoid possible personal injury while using the wrist strap, do not connect it to the power shelf or adjacent portions of the RT frame. Connect the wrist strap to ESD GRD jack on the fan unit, if present. If grounding jack is not present, connect wrist strap to bare-metal section of the frame well away from the power shelf.*

| DO ITEMS BELOW IN ORDER LISTED | FOR DETAILS, GO TO |
|---|---|
| 4. **NOTE:** Batteries are shipped directly from manufacturer.<br><br>Install and test RT batteries in 80D or 80E cabinet skirt: | |
| A. *Chloride* batteries in 80E cabinet. | DLP-524 |
| B. Lineage 2000 VR Series batteries in 80E cabinet. | DLP-525 |
| C. Lineage 2000 VR Series batteries in 80D cabinet. | DLP-534 |
| D. *Chloride* batteries in 80D cabinet. | DLP-535 |
| 5. Verify connections to ED-83114-30 control & distribution panel. | DLP-526 |
| 6. Install power units in rectifier shelf. | DLP-527 |
| 7. Install **3C RINGING GENERATOR**s in ring shelf. (Not required for FTTH arrangement) | DLP-528 |
| 8. Install **RCU** (ring control unit) in ring shelf. (Not required for FTTH arrangement) | DLP-529 |
| 9. **NOTE:** Each circuit breaker on control and distribution panel supplies an equipment bay according to the cabinet group arrangement. To identify circuit breakers, refer to the label located on the door opposite the Control and Distribution Panel.<br><br>Turn on one circuit breaker and verify the it does not trip. If the circuit breaker does trip, cabinet wiring trouble must be cleared before continuing. | |
| 10. If the circuit breaker powers RT dual channel bank(s) or J1C182PB-1 Optics Power shelf, continue with step **11**. Otherwise, proceed to Step **12**. | |

| DO ITEMS BELOW IN ORDER LISTED | FOR DETAILS, GO TO |
|---|---|

11.

**NOTE:**
Testing of the PCU in a Fiber to the Home RT channel bank is not required at this time. This test will be done when the J1C1182PB-1 Optics Power Shelf is turned up.

Install and test **PCU**, then remove **PCU**;

| | |
|---|---|
| A. in dual RT channel bank facility (middle) shelf. | DLP-511 |
| B. in J1C182PB-1 Optics Power Shelf (any slot). | DLP-530 |

12. Turn circuit breaker off. Repeat Steps **9** through **11** for each circuit breaker. Then continue with Step **13**.

13. Update office records.

# Turn Up J1C182PB-1 Optics Power Shelf and Install AYB1B Optical Units

| DO ITEMS BELOW IN ORDER LISTED | FOR DETAILS, GO TO |
|---|---|

1.

**NOTE:**
This procedure assumes the following:

- The outside cable pairs or fiber lines are not closed through to the RT so that the RT is isolated from the digital lines
- The frame or 80E-type cabinet housing the RT has been installed
- The J1C182AE dual channel bank assembly has been installed in the frame or 80E-type cabinet
- The miscellaneous pair panel, optical shelves, optics power shelf, and fan shelves have been installed in the frame
- The LICs (lightguide interconnect cables) from the RT frame or 80E-type cabinet to the OIC (optical interconnect) have been installed
- The acceptance TAB procedures in this volume have been performed.
- The 80E-type cabinet, if used, supporting equipment has been turned up using procedures in this TAB.

This procedure contains instructions concerning the installation of the various units into the optics power shelf, optical shelves, and for verifying that the units are operating properly.

## DO ITEMS BELOW IN ORDER LISTED FOR DETAILS, GO TO

2. Get support apparatus listed:
   - J99409OB, L1 optical backplane maintenance kit
   - Box of *Kimwipes** wipers (Lint Guard Poly Shield, Stock No. 34155), or equivalent
   - Bottle of isopropyl reagent alcohol with dispenser
   - Can of compressed air
   - DMM (digital multimeter) with an accuracy of 1.0% and an ac/dc input impedance of ≥ 1 megohm.

3. **CAUTION:**
   *An electrostatic discharge wrist strap with a minimum resistance of 250K Ohms should be worn when handling Series 5 circuit packs to prevent possible damage to the circuit packs. Before using the wrist strap, check it for opens, shorts, and minimum resistance value. If the strap does not pass these checks it should not be used. To avoid possible personal injury while using the wrist strap, do not connect it to the power shelf or adjacent portions of the RT frame. Connect the wrist strap to ESD GRD jack on the fan unit, if present. If grounding jack is not present, connect wrist strap to bare-metal section of the frame well away from the power shelf.*

*. Registered trademark of Kimberly-clark Corp.

| DO ITEMS BELOW IN ORDER LISTED | | FOR DETAILS, GO TO |
|---|---|---|
| 4. | **NOTE:** Two **BFU**s are required to turn up each dual bank assembly; one is needed for the dual bank assembly and the second one is needed for the associated optical shelves. All 4 **BFU**s should be installed at this time.<br><br>Install and check fuses in 4 **BFU**s (bank fuse units) in optics power shelf. | DLP-510 |
| 5. | **NOTE:** Only **AUA11B** or later version **PCU**s should be installed in optics power shelf.<br><br>Install 8 **PCU**s in optics power shelf. | DLP-530 |
| 6. | Install **A/FCU** (alarm/fan control unit) in optics power shelf. | DLP-531 |
| 7. | Install **AYB1B OU**s in optical shelf. | DLP-532 |
| 8. | Update Office records. | |

# Verify Cabinet AC Power Panel Connections

1. AC power panels are typically accessed from side 1 of the cabinet. The cabinet is typically opened using a special key (allen-type wrench) and a 216-type tool as shown in figure 1.

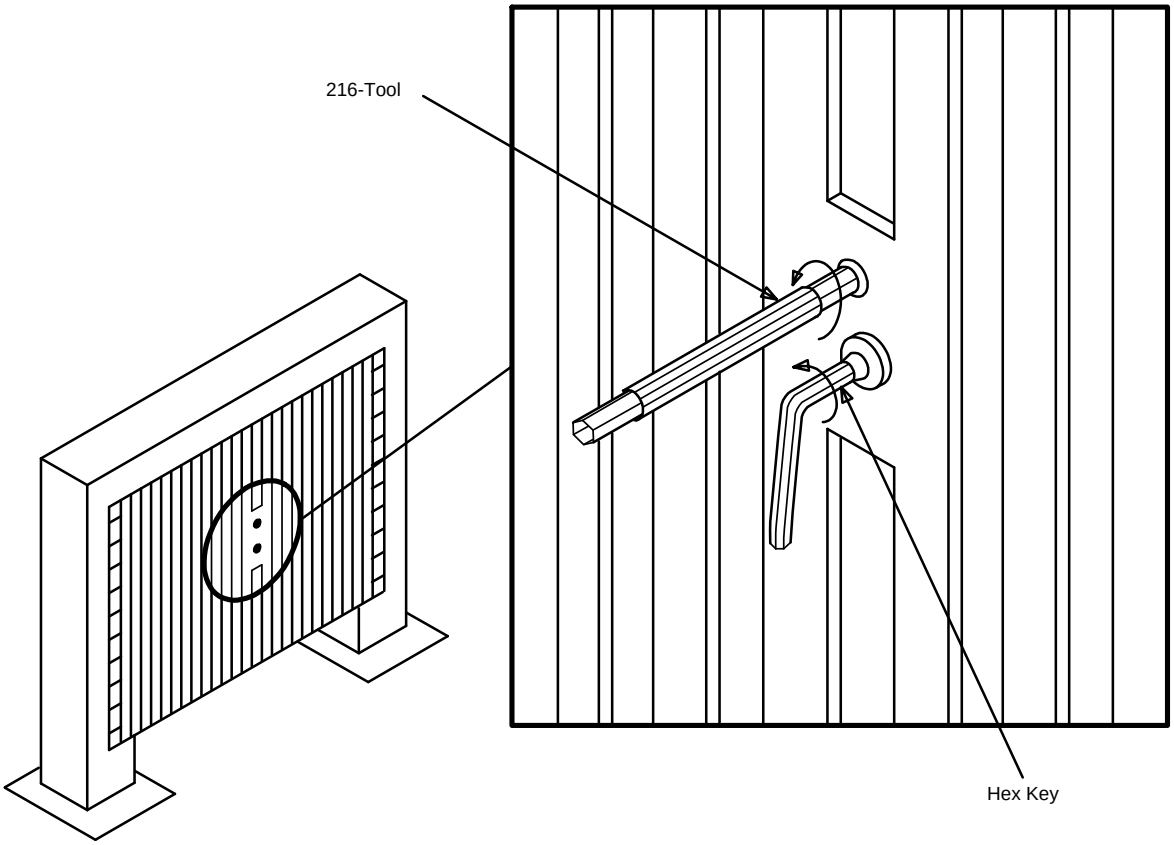


**Figure 1 – Opening a Typical Cabinet With Hex Key and 216-Tool**

2. On the inside of the door there is an AC wiring diagram and a Table for circuit breaker code. See figure 2.

| CIRCUIT BREAKER CODE | | |
|---|---|---|
| CB1 | UTILITY AC SUPPLY | 60 AMP, 2 POLE |
| CB2 | GENERATOR AC SUPPLY | 40 AMP, 2 POLE |
| CB3 | J7, J8 - MISCELLANEOUS | 20AMP |
| CB4 | J9 - POWER SHELF | 20 AMP, 2 POLE |
| CB5 | J3, J4 - MISCELLANEOUS | 20AMP |
| CB6 | J5, J6 - BATTERY HEATERS | 20AMP |
| CB7 | J1, J2 - GFCI PROTECTED CONVENIENCE OUTLETS | 20AMP GFCI |
| CB11 | TRANSFER SWITCH CURRENT LIMIT | 60 AMP, 2 POLE |

**Figure 2 – Typical Circuit Breaker Code Table**

3.

**CAUTION:**
*Improper AC power connections to a power panel can cause damage to power shelf equipment.*

Verify the CB( ) circuit breakers can be turned on and AC power is present at the associated J( ) outlet(s).

4. Verify that power shelf(ves), battery heaters, ... listed in the Table on the door are plugged into the proper outlet and not plugged into the GFCI outlet(s).

**STOP. YOU HAVE COMPLETED THIS PROCEDURE.**

# Install Load Distribution Unit (LDU) in Power Shelf

**SUMMARY:** Insert **LDU** into power shelf. Measure 105-129 V AC on **LDU** faceplate. If required, install order wire build-out resistance module (ED7C613-30, G2) in **LDU** or miscellaneous pair panel assembly. Set order wire impedance switches.

1. Get one **LDU** and, if required, one ED7C613-30, G2 order wire build-out resistance module and inspect for possible physical damage.

2. Insert **LDU** into **LDU** slot in power shelf.

3. Condition DMM to measure AC volts.

4. At **LDU**, connect DMM test leads to **AC** and **GND** jacks.

5. Does DMM indicate between 105 and 129 volts?

   If **YES,** then proceed to Step **13.**
   If **NO,** then continue with Step **6.**

6. Check AC power cord connections at rear of power shelf and AC power connection to dual bank assembly.

7. Has AC power cord been properly connected and is AC connection to dual bank assembly present?

   If **YES,** then continue with Step **8.**
   If **NO,** then **refer trouble to installation group.**

8. Replace **LDU**.

9. At **LDU**, connect DMM test leads to **AC** and **GND** jacks.

10. Does DMM indicate between 105 and 129 volts?

    If **YES,** then proceed to Step **13.**
    If **NO,** then continue with Step **11.**

11. Replace **LDU** with **LDU** removed previously.

12. Check wiring on rear of power shelf using SD-7C119-01 and check AC power connections at dual bank assembly. Repeat procedure from Step **4** after locating and correcting trouble.

13. Remove DMM test leads from **LDU**.

14. Is ED7C613-30, G2 order wire build-out resistance module to be installed?

    If **YES,** then continue with Step **15.**
    If **NO,** then **STOP. YOU HAVE COMPLETED THIS PROCEDURE.**

15. Is RT assembly installed in frame or cabinet?

    If **FRAME,** then proceed to Step **17.**
    If **CABINET,** then continue with Step **16.**

16. Insert ED7C613-30, G2 order wire build-out resistance module into slot in **LDU** faceplate and proceed to Step **18.**

17. At miscellaneous pair panel, pull top of faceplate forward to expose top of unit and insert ED7C613-30, G2 order wire build-out resistance module into slot located in top of unit on left side.

18. Set switches on order wire build-out resistance module per engineering records (Figure 1).

    **STOP. YOU HAVE COMPLETED THIS PROCEDURE.**

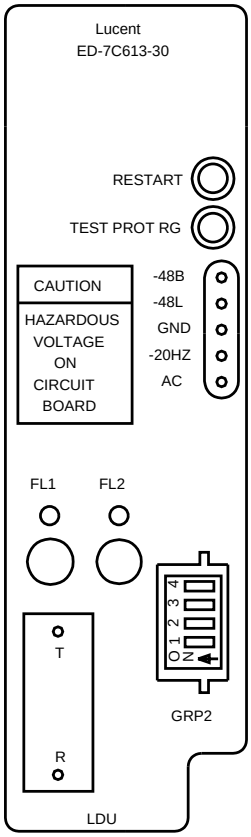


SWITCH SETTINGS FOR ORDER WIRE BUILD-OUT
(LINE POWER, 48 VOLTS)

| CO-RT CABLE DC RES * | 100 NET VALUE RES | SWITCH POSITIONS | | | |
|---|---|---|---|---|---|
| | | 1 | 2 | 3 | 4 |
| 0-250 | 1748 | ON | OFF | OFF | OFF |
| 251-500 | 1499 | ON | OFF | OFF | ON |
| 501-750 | 1249 | ON | OFF | ON | OFF |
| 751-1000 | 1000 | ON | OFF | ON | ON |
| 1001-1250 | 748 | ON | ON | OFF | OFF |
| 1251-1500 | 499 | ON | ON | OFF | ON |
| 1501-1750 | 249 | ON | ON | ON | OFF |
| 1751-2000 | 0 | ON | ON | ON | ON |

* CO OFFICE TO RT

**Figure 1 – Load Distribution Unit**

# Perform Initial Installation and Tests of Batteries in Frame-Type or Cabinet-Type RT Enclosure

**SUMMARY:** Remove AC power from system. Install and connect four KS-21906, L4 battery packs on each battery shelf. Measure voltage greater than 45 V DC at front of battery shelf. Install fuses into battery shelves. Restore AC power to system.

**NOTE:**
This procedures does not support the installation and testing of batteries in a 51-type cabinet. Use DLP-503 for 51-type cabinets.

1. **DANGER:**
   *High current flow will occur if short is placed across battery terminals. No attempt should be made to measure battery voltage across terminals.*

   Get four KS-21906, L4 battery packs.

2. Ensure that AC power circuit breaker(s) is **off** for system(s) being installed or that AC power cord is disconnected from power shelf plug (**P112**).

3. Ensure that no circuit packs, except **LDU**, are installed in any shelf; unseat any circuit pack(s) that may be installed.

4. At front of battery shelf remove front cover by lifting cover up and out (Figure 1).

5. Place batteries on battery shelf and dress battery cables as each battery pack is placed on shelf (Figure 2).

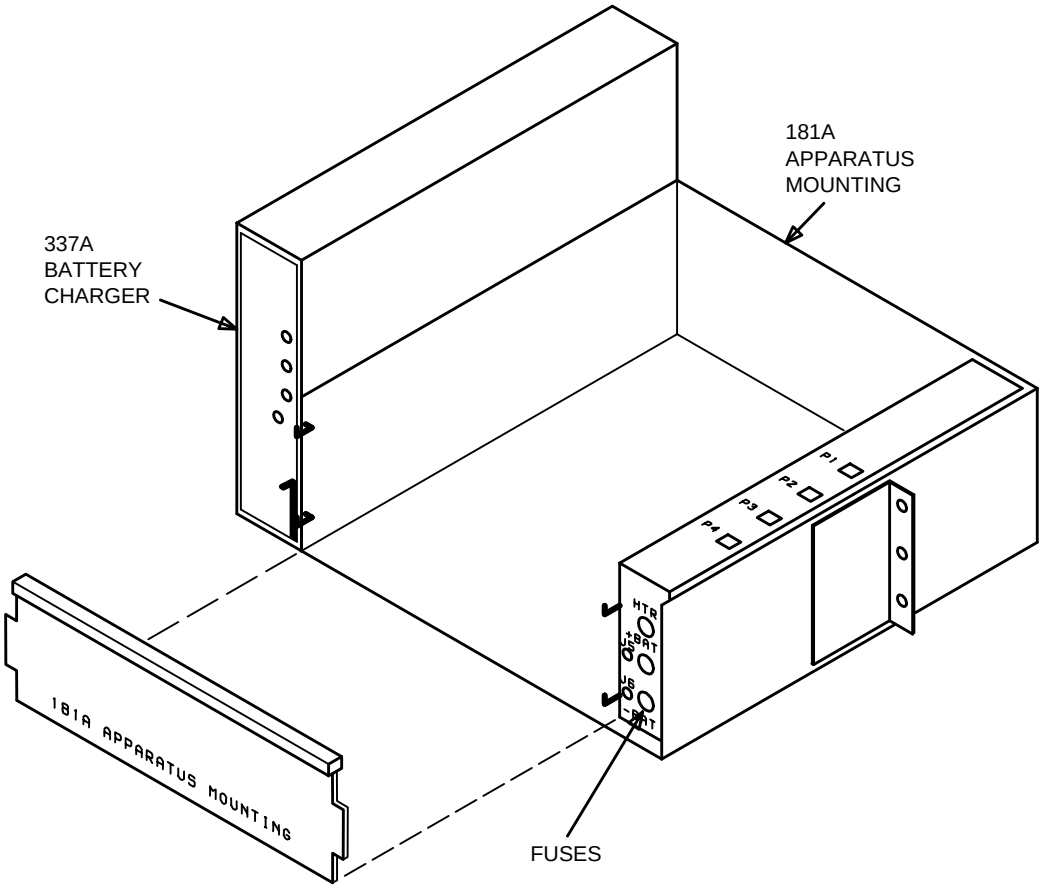


**Figure 1 – Battery Shelf**

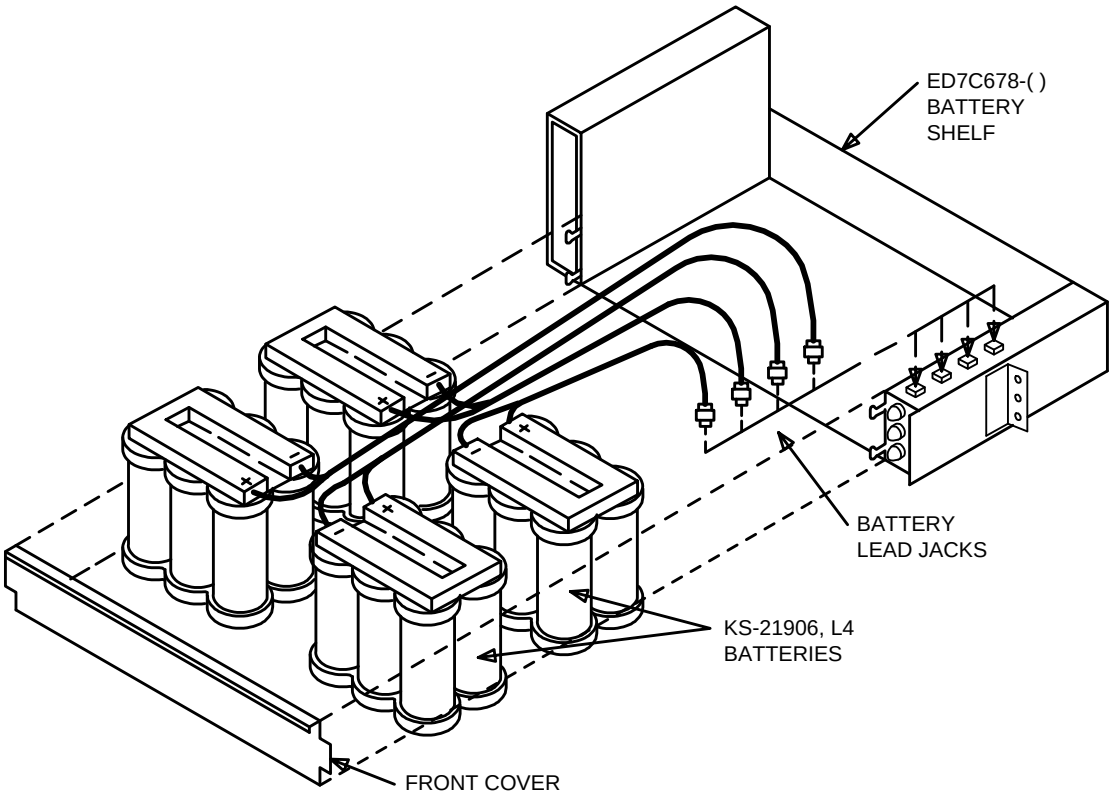


**Figure 2 – Battery Placement and Connections**

6.

**NOTE:**
Four battery lead jacks can be plugged into any of four plugs on battery shelf, in any order.

Connect four battery lead jacks to four plugs (**P1, P2, P3,** and **P4**) on battery shelf being equipped and dress battery cables.

7. Reinstall front cover on battery shelf.

8. Remove fuses, if present, from **+BAT** and –**BAT** fuse holders on battery shelf.

9. Condition DMM to measure DC volts.

10. On battery shelf, connect DMM test leads to **+BAT** jack (**J5**) and –**BAT** jack (**J6**).

11. Does meter indicate greater than 45.0 volts DC?

    If **YES,** then proceed to Step **20.**
    If **NO,** then continue with Step **12.**

12. Check battery lead connections at battery shelf.

13. Does meter indicate greater than 45.0 volts DC?

    If **YES,** then proceed to Step **20.**
    If **NO,** then continue with Step **14.**

14.

    **NOTE:**
    If voltage requirements are not met after replacement battery pack is installed, original battery pack should be reinstalled in battery shelf.

    Replace one of the battery packs.

15. On battery shelf, connect DMM test leads to **+BAT** jack (**J5**) and –**BAT** jack (**J6**).

16. Does meter indicate greater than 45.0 volts DC?

    If **YES,** then proceed to Step **20.**
    If **NO,** then continue with Step **17.**

17. Have all battery packs been replaced?

    If **YES,** then continue with Step **18.**
    If **NO,** then proceed to Step **19.**

18. Check battery lead connections at battery shelf. Repeat procedure from Step **10** after locating and correcting trouble.

19.

**NOTE:**
If voltage requirements are not met after replacement battery pack is installed, original battery pack should be reinstalled in battery shelf.

Select another battery pack on battery shelf and repeat from Step **14.**

20. Remove DMM test leads from battery shelf.

21. Have all battery shelves been equipped and tested?

    If **YES,** then proceed to Step **23.**
    If **NO,** then continue with Step **22.**

22. Go to next battery shelf and repeat from Step **4.**

23. Install good 25-Amp fuses (Buss ABC or equivalent) into **+BAT** and –**BAT** fuse holders of all battery shelves equipped with batteries (Figure 1).

24. If required, install good 5-Amp fuse into **HTR** (heater) fuse holder(s) of all battery shelves equipped with batteries (Figure 1).

25. Turn AC power circuit breaker on and ensure that AC power cord is connected to power shelf plug (**P112**).

**STOP. YOU HAVE COMPLETED THIS PROCEDURE.**

# Perform Initial Installation and Tests of Batteries for 51-Type (ED-7C601-30) Cabinet RT

**SUMMARY:** Remove AC power from system. Install and connect four KS-21906, L4 battery packs on each battery shelf. With battery string fuses removed, measure voltage greater than 45 V DC at power panel and/or at battery shelf. Install fuses into power panel (battery strings 1 and 2) and/or battery shelf housing battery string 3, if present. Restore AC power to system.

1. Ensure that AC power circuit breaker is **off** or that AC power cord is disconnected from power shelf plug (**P112**).

2. Ensure that no circuit packs except **LDU** are installed in any shelf; unseat any circuit pack(s) that may be installed.

3. In battery section of cabinet at power panel (Figure 1), refer to Table A and remove the fuses associated with battery string(s) being installed.

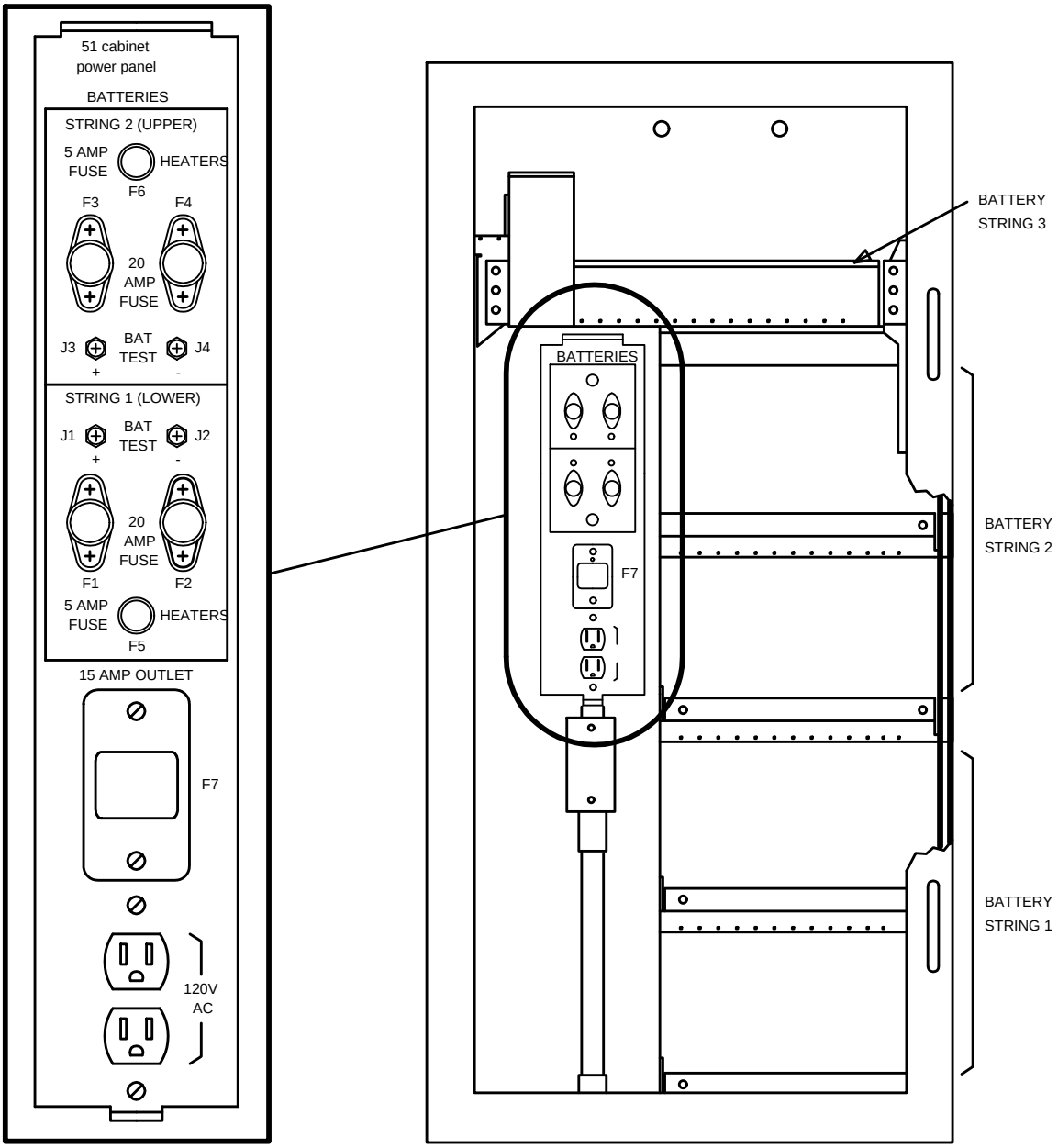


**Figure 1 – Battery Section of 51A Cabinet Showing Power Panel**

| Table A<br><br>51A Power Panel | | | | |
|---|---|---|---|---|
| **Power Panel (Note)** | **Battery String** | **Associated Fuses** | **Associated Jacks** | **Connector Plug** |
| Early Version | 1 (Lower) | F3, F4, F5 | J3, J4 | P5, P6, P7, P8 |
| | 2 (Upper) | F1, F2, F6 | J1, J2 | P1, P2, P3, P4 |
| Later Version | 1 (Lower) | F1, F2, F5 | J1, J2 | P1, P2, P3, P4 |
| | 2 (Upper) | F3, F4, F6 | J3, J4 | P5, P6, P7, P8 |
| ***Note:*** If the words **51 CABINET POWER PANEL** appear at the top of the power panel, then the power panel is a later version. Otherwise, the power panel is an early version. | | | | |

4.

**DANGER:**
*High current flow will occur if short is placed across battery terminals. No attempt should be made to measure battery voltage across terminals.*

**NOTE:**
Eight battery packs are needed if two battery strings are to be installed.

Get four KS-21906, L4 battery packs.

5.

**NOTE:**
Lower two battery shelves house battery string 1 and upper two battery shelves house battery string 2 (when installed). If additional battery string (battery string 3) is required, a 181A apparatus mounting can be installed in top of battery section to house it.

Place batteries on battery shelves and dress battery cables as each battery pack is placed on shelf.

6.

**NOTE:**
Four plugs are supplied from the power panel to battery string 1 and four plugs are also supplied to battery string 2. These plugs are labeled **P1** through **P8** and are listed in Table A along with their associated battery strings.

Connect each battery lead jack to one of two plugs supplied to each shelf.

7. At power panel, reinstall fuses associated with battery string being installed [either **F1** and **F2** or **F3** and **F4** (Table A)].

8. Get DMM and condition to measure DC volts.

9. On power panel, connect DMM test leads to **+ BAT TEST** jack (**J1** or **J3**) and – **BAT TEST** jack (**J2** or **J4**) of battery string being tested.

10. Does meter indicate greater than 45.0 volts DC?

    If **YES,** then proceed to Step **19.**
    If **NO,** then continue with Step **11.**

11. Check battery lead connections at battery shelf.

12. Does meter indicate greater than 45.0 volts DC?

    If **YES,** then proceed to Step **19.**
    If **NO,** then continue with Step **13.**

13.

**NOTE:**
If voltage requirements are not met after replacement battery pack is installed, original battery pack should be reinstalled in battery shelf.

Replace one of the battery packs in battery shelf.

14. On power panel, connect DMM test leads to **+ BAT TEST** jack (**J1** or **J3**) and – **BAT TEST** jack (**J2** or **J4**) of battery string being tested.

15. Does meter indicate greater than 45.0 volts DC?

    If **YES,** then proceed to Step **19.**
    If **NO,** then continue with Step **16.**

16. Have all battery packs on shelf been replaced?

    If **YES,** then proceed to Step **18.**
    If **NO,** then continue with Step **17.**

17. Select another battery pack on battery shelf and repeat from Step **13.**

18. Check battery lead connections at battery shelf. Repeat procedure from Step **9** after locating and correcting trouble.

19. Is another battery string to be installed at this time?

    If **YES,** then proceed to Step **21.**
    If **NO,** then continue with Step **20.**

20. Remove DMM test leads and proceed to Step **42.**

21. Has battery string 2 been installed and tested?

    If **YES,** then continue with Step **22.**
    If **NO,** then proceed to Step **4.**

22. **DANGER:**
    *High current flow will occur if short is placed across battery terminals. No attempt should be made to measure battery voltage across terminals.*

    Get four KS-21906, L4 battery packs.

23. At front of battery shelf, remove front cover by lifting cover up and out (Figure 2).

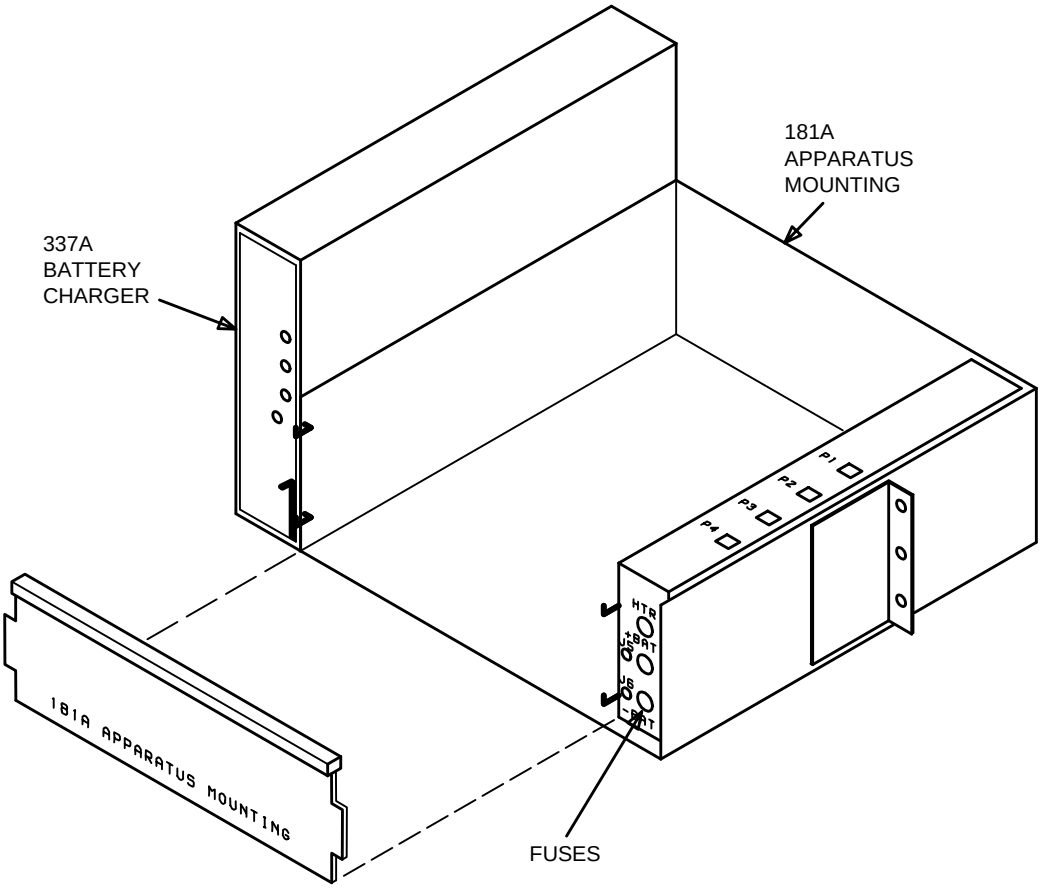


**Figure 2 – Battery Shelf**

24. Place batteries on battery shelf and dress battery cables as each battery pack is placed on shelf (Figure 3).

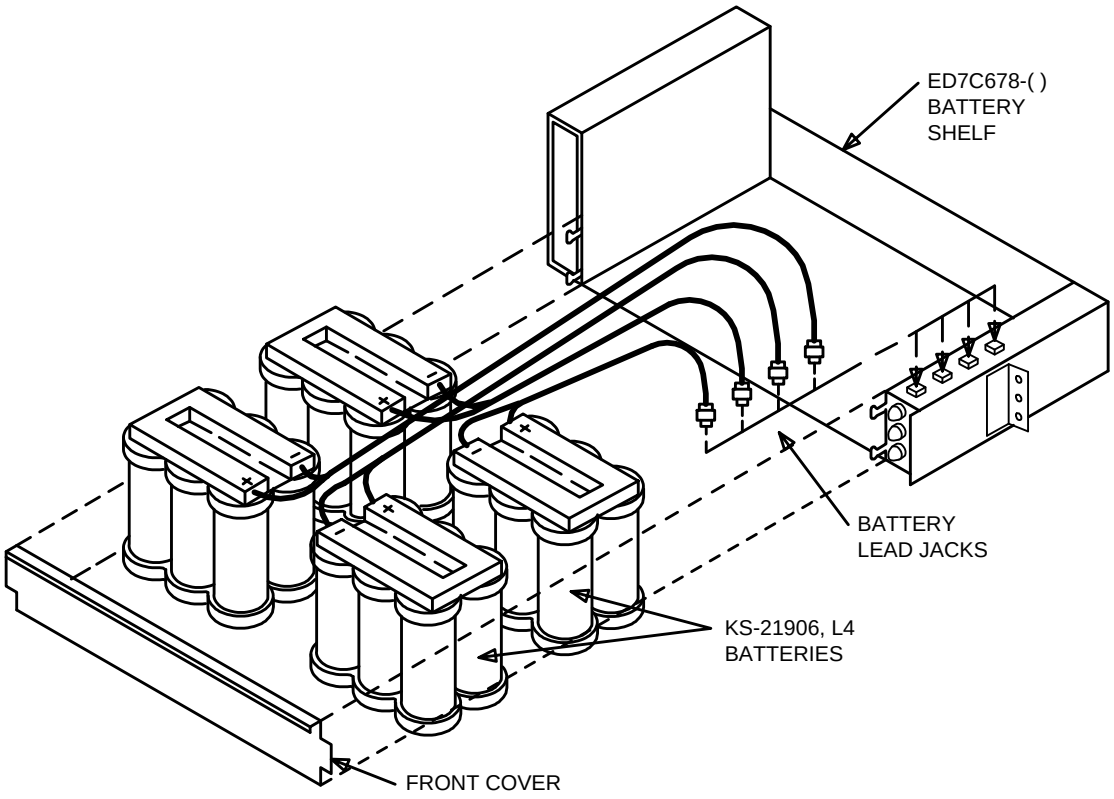


**Figure 3 – Battery Placement and Connections**

25.

**NOTE:**
Four battery jacks can be plugged into any of four plugs on shelf, in any order.

Connect four battery lead jacks to four plugs (**P1, P2, P3,** and **P4**) on top of battery shelf.

26. Reinstall front cover on battery shelf.

27. Remove fuses, if present, from **+BAT** and –**BAT** fuse holders on battery shelf.

28. Condition DMM to measure DC volts.

29. On battery shelf, connect DMM test leads to **+BAT** jack (**J5**) and –**BAT** jack (**J6**).

30. Does meter indicate greater than 45.0 volts DC?

    If **YES,** then proceed to Step **39.**
    If **NO,** then continue with Step **31.**

31. Check battery lead connections at battery shelf.

32. Does meter indicate greater than 45.0 volts DC?

    If **YES,** then proceed to Step **39.**
    If **NO,** then continue with Step **33.**

33.

    **NOTE:**
    If voltage requirements are not met after replacement battery pack is installed, original battery pack should be reinstalled in battery shelf.

    Replace one of the battery packs.

34. On battery shelf, connect DMM test leads to **+BAT** jack (**J5**) and –**BAT** jack (**J6**).

35. Does meter indicate greater than 45.0 volts DC?

    If **YES,** then proceed to Step **39.**
    If **NO,** then continue with Step **36.**

36. Have all battery packs been replaced?

    If **YES,** then continue with Step **37.**
    If **NO,** then proceed to Step **38.**

37. Check battery lead connections at battery shelf. Repeat procedure from Step **29** after locating and correcting trouble.

38.

**NOTE:**
If voltage requirements are not met after replacement battery pack is installed, original battery pack should be reinstalled in battery shelf.

Select another battery pack on battery shelf and repeat from Step **33.**

39. Remove DMM test leads.

40. Install good 25-Amp fuses (Buss ABC or equivalent) into **+BAT** and –**BAT** fuse holders on battery shelf.

41. Install good 5-Amp fuse into **HTR** fuse holder on battery shelf.

42. At power panel, reinstall **HEATERS** fuse(s) **F5** and/or **F6** for battery string(s) installed.

43. Turn AC power circuit breaker on and ensure that AC power cord is connected to power shelf plug (**P112**).

**STOP. YOU HAVE COMPLETED THIS PROCEDURE.**

# Perform Test of RT Batteries Using 197A Battery Load Test Set

1.

**CAUTION:**
*Service interruption will occur if batteries are disconnected and AC power is not available.*

Obtain **197A BATTERY LOAD TEST SET (197A)** and place near batteries to be tested (Figure 1).

2.

**NOTE:**
The 197A test set is intended to test batteries that are fully charged. A minimum of two days must be allowed between the time the batteries (new or replacement) are put on high rate charge and this test is made. After testing is completed, the batteries must be put on high rate charge using the **337A BATTERY CHARGER**.

Remove cover from **197A** test set.

3. Check **197A** test set for proper operation (if not already performed).

   Reference: **DLP-533**

4. Ensure that system(s) associated with batteries to be tested has AC power available (**PMN** or **P/M** indicator on **BCU** circuit pack not lighted).

5. On **337A BATTERY CHARGER** associated with batteries to be tested, is **HIGH RATE CHG/ON** indicator lighted?

   If **YES,** then continue with Step **6.**
   If **NO,** then proceed to Step **7.**

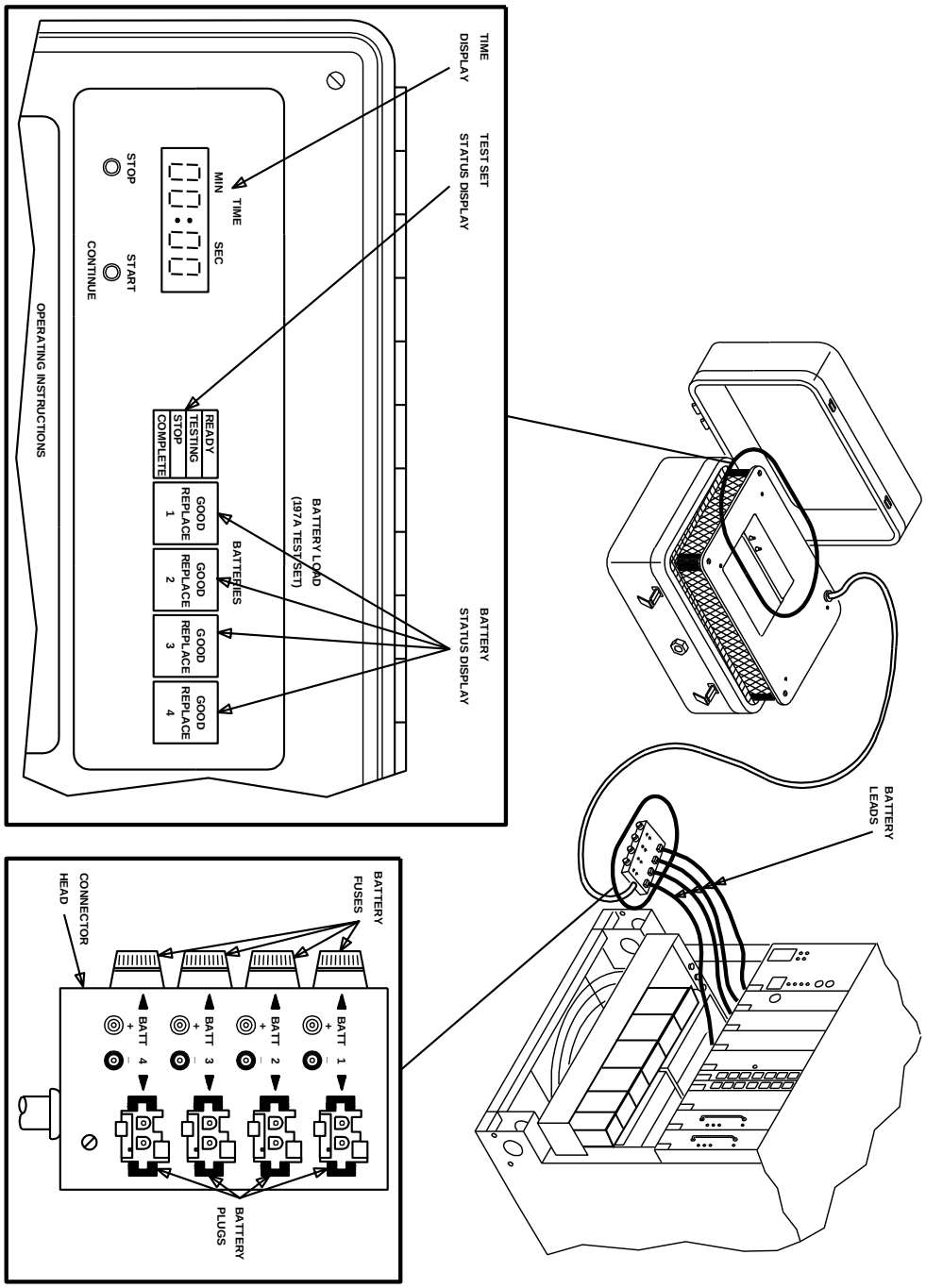


**Figure 1 – 197A Battery Load Test Set Test Connections**

6. Batteries are on high charge and may require up to 24 hours to charge. Do not perform this procedure until **HIGH RATE CHG/ON** indicator on **BATTERY CHARGER** goes off.

7. **CAUTION:**
   *Service interruption will occur if batteries are disconnected and AC power is not available.*

   Disconnect battery leads of batteries to be tested from battery shelf.

8. **NOTE:**
   Under normal conditions, when the first battery is connected, the following occurs: (a) The test set **TIME** display indicates **00 MIN:00 SEC**; (b) The status display indicates which test set **BATT** plug the battery is connected to, status of the battery (**GOOD** or **REPLACE**), and the **READY** indicator lights; (c) Test set fan operates.

   At test set connector head (Figure 1), connect battery leads (up to four) to **BATT 1, 2, 3,** and **4** plugs.

9. **NOTE:**
   If status display does not indicate battery number of battery status, **BATT** fuse may be blown, connector head or test set may be defective, or battery pack may be defective.

   Does test set display indicate **REPLACE** for all batteries being tested?

   If **YES,** then continue with Step **10.**
   If **NO,** then proceed to Step **12.**

10. Replace all batteries and connect good batteries to battery shelf.

11. Place batteries on high charge by depressing **HIGH RATE CHG/ACTIVATE** pushbutton on **BATTERY CHARGER** and repeat from Step **6.**

12.

**DANGER:**
*A high discharge current is present at connector head if TESTING indicator is lighted. Batteries must not be connected or disconnected when TESTING indicator is lighted.*

**NOTE:**
This test must run for a full 15 minutes to be valid or until all batteries indicate **REPLACE**. The **STOP** button should only be used if a problem occurs during the test, if the test is to be terminated early because of loss of AC power, or if all batteries indicate **REPLACE**. The **START/CONTINUE** button is used to continue the test if no problem is found.

Depress **197A** test set **START/CONTINUE** button.

Response: At **197A** test set, **TESTING** indicator is lighted, **READY** indicator is off, and **TIME** display is counting time.

13.

**NOTE:**
If one, two, or three, but not all, batteries show **REPLACE** during the test period, the remaining batteries still must be tested for the full 15 minutes.

Does test set show **REPLACE** for all batteries within the 15-minute test period shown on **TIME** display?

If **YES,** then continue with Step **14.**
If **NO,** then proceed to Step **15.**

14.

**DANGER:**
*A high discharge current is present at connector head if TESTING indicator is lighted. Batteries must not be connected or disconnected when TESTING indicator is lighted.*

Depress test set **STOP** button.

Response: **STOP** indicator on test set lights

Proceed to Step **17.**

15. After 15 minutes, the test set **COMPLETE** indicator lights.

16. Is any **REPLACE** indicator on test set lighted?

    If **YES,** then continue with Step **17.**
    If **NO,** then **STOP. YOU HAVE COMPLETED THIS PROCEDURE.**

17. Unplug and set aside all defective batteries.

18. Install and connect replacement batteries to battery shelf. Reconnect any remaining good batteries to battery shelf.

19. Place batteries on high charge by depressing **HIGH RATE CHG/ACTIVATE** pushbutton on **BATTERY CHARGER** and repeat from Step **6.**

# Install 337A Battery Charger

**SUMMARY:** Insert **337A BATTERY CHARGER** into power shelf (battery string 1 and 2 in a 51-type cabinet) or slot on battery shelf (80-type, frame, or battery string 3 in a 51-type cabinet) and press **HIGH RATE CHG/ACTIVATE** button. Measure –42 to –56 volts at **LDU** (–**48B**/**GND**). Unseat **BATTERY CHARGER**. Repeat for additional **BATTERY CHARGER**s.

1.

**NOTE:**
In the 51-type cabinet, the **BATTERY CHARGER**s associated with battery string 1 (lower two battery shelves) and battery string 2 (upper two battery shelves) are to be installed in power shelf. **BATTERY CHARGER** for battery string 3 (located in 181A apparatus mounting.

Get one **337A BATTERY CHARGER** and inspect it for possible damage.

2. Verify that fuses on **BATTERY CHARGER** are not blown (Figure 1).

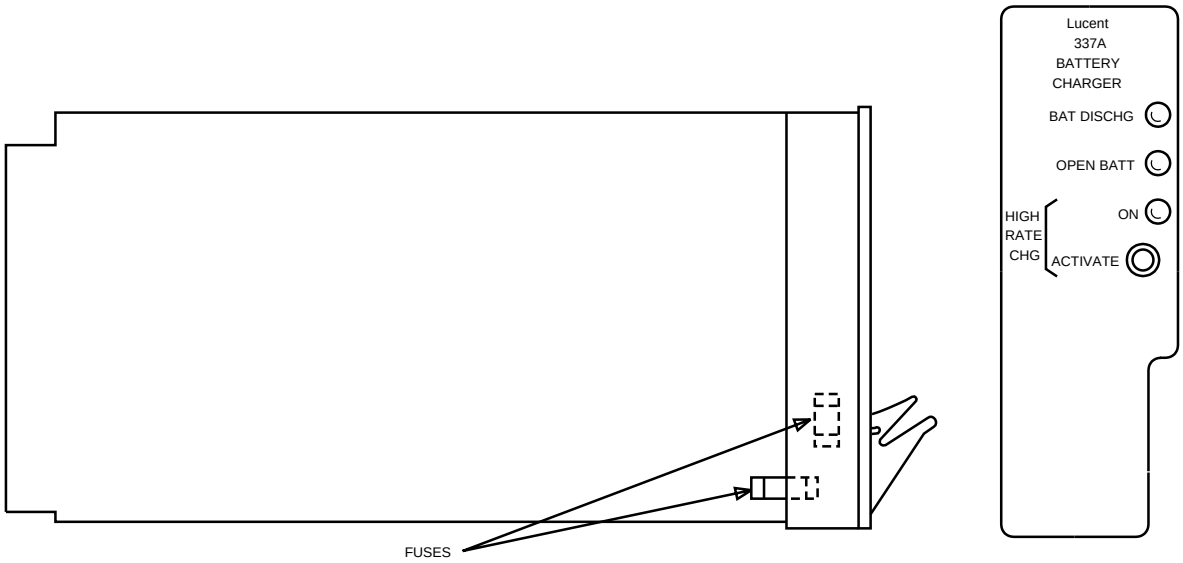


**Figure 1 – Location of Fuses on 337A BATTERY CHARGER**

3. Insert **337A BATTERY CHARGER** into slot as follows;

   **51-type cabinet**
   First 337A into the first (counting left to right) RECT/BATCHG slot in the power shelf (Figure 2).

   **Other type RT enclosure**
   Into the slot located on left side of battery shelf (Figure 3).

4. Press **HIGH RATE CHG/ACTIVATE** button on **BATTERY CHARGER**.

   Response: **BAT DISCHG** indicator on **337A BATTERY CHARGER** is lighted.

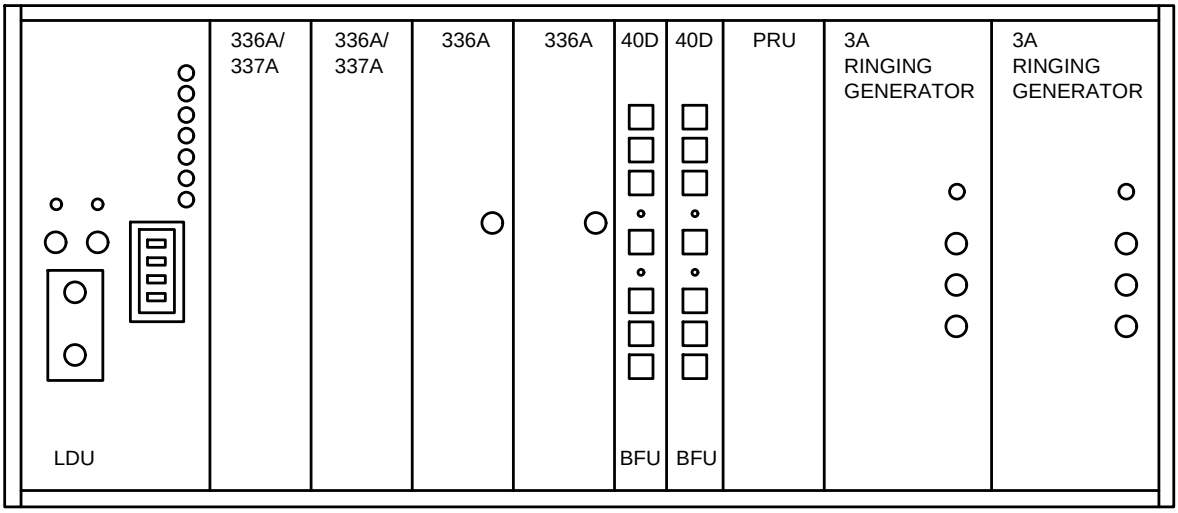


**Figure 2 – J1C182BA Power Shelf**

5. Condition DMM to measure DC volts.

6. Connect DMM test leads to **GND** jack and –**48B** jack on **LDU**.

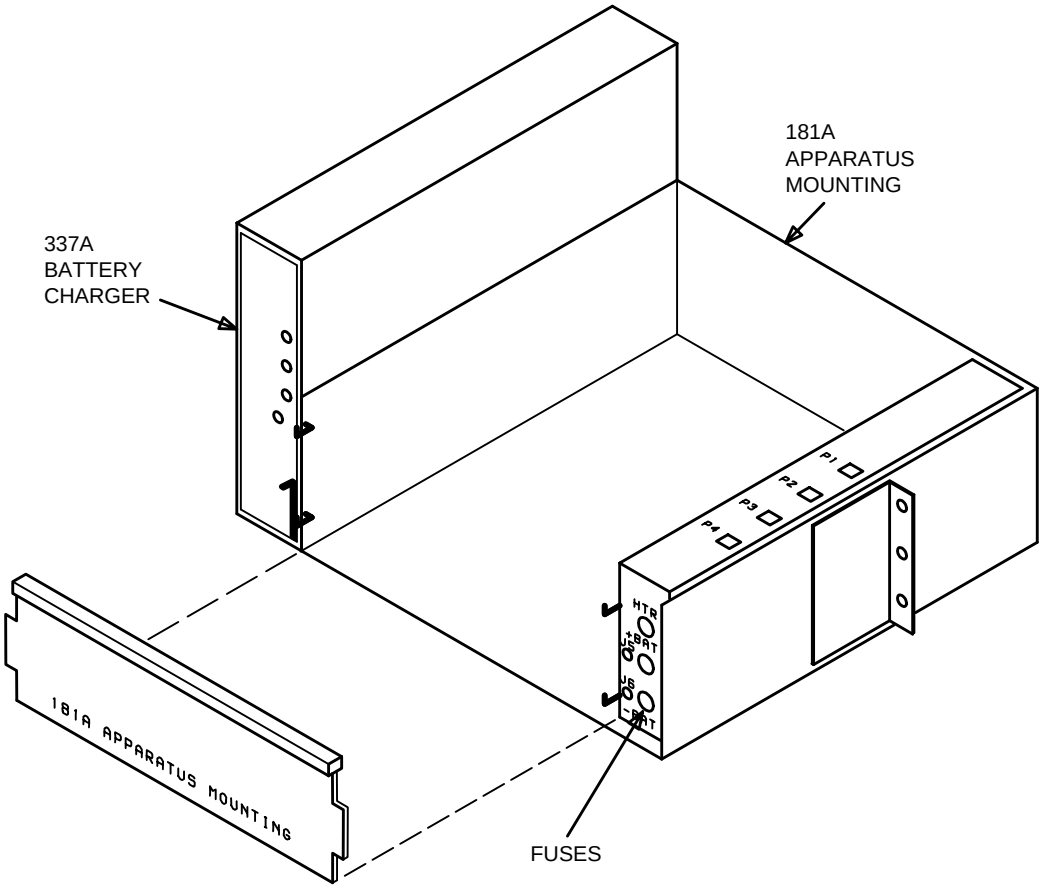


**Figure 3 – Battery Shelf**

7. Does DMM indicate between –42 and –56 volts?

   If **YES,** then proceed to Step **20.**
   If **NO,** then continue with Step **8.**

8. Check wiring between battery shelf being equipped with **BATTERY CHARGER** and the power shelf. (Refer to SD-7C119-01.)

9. Is wiring present and properly connected?

   If **YES,** then proceed to Step **11.**
   If **NO,** then continue with Step **10.**

10. Repair or replace wiring and repeat from Step **6.**

11. Replace **337A BATTERY CHARGER**.

12. Connect DMM test leads to **GND** jack and –**48B** jack on **LDU**.

13. Does DMM indicate between –42 and –56 volts?

    If **YES,** then proceed to Step **20.**
    If **NO,** then continue with Step **14.**

14. Replace **337A BATTERY CHARGER** with **BATTERY CHARGER** unit removed previously.

15. Replace **LDU**.

16. Connect DMM test leads to **GND** jack and –**48B** jack on **LDU**.

17. Does DMM indicate between –42 and –56 volts?

    If **YES,** then proceed to Step **20.**
    If **NO,** then continue with Step **18.**

18. Replace **LDU** with **LDU** removed previously.

19. Check wiring using SD-7C119-01. Repeat procedure from Step **6** after locating and correcting trouble.

20. Disconnect DMM test leads and unseat **337A BATTERY CHARGER**.

21. Are other **BATTERY CHARGER**s to be installed?

    If **YES,** then continue with Step **22.**
    If **NO,** then **STOP. YOU HAVE COMPLETED THIS PROCEDURE.**

22. Get another **337A BATTERY CHARGER** and inspect it for possible damage.

23. Verify that fuses on **BATTERY CHARGER** are not blown (Figure 1).

24. Insert **337A BATTERY CHARGER** into slot as follows;

    **51-type cabinet**

    - Second 337A into the second (counting left to right) **RECT/BATCHG** slot in the power shelf (Figure 2).
    - Third 337A into the slot located on left side of battery shelf (Figure 3).

    **Other type RT enclosure**
    Into the slot located on left side of battery shelf (Figure 3).

25. Press **HIGH RATE CHG/ACTIVATE** button on **BATTERY CHARGER**.

    Response: **BAT DISCHG** indicator on **337A BATTERY CHARGER** is lighted.

26. Connect DMM test leads to **GND** jack and –**48B** jack on **LDU**.

27. Does DMM indicate between –42 and –56 volts?

    If **YES,** then proceed to Step **33.**
    If **NO,** then continue with Step **28.**

28. Replace **337A BATTERY CHARGER**.

29. Connect DMM test leads to **GND** jack and –**48B** jack on **LDU**.

30. Does DMM indicate between –42 and –56 volts?

    If **YES,** then proceed to Step **33.**
    If **NO,** then continue with Step **31.**

31. Replace **337A BATTERY CHARGER** with **BATTERY CHARGER** removed previously.

32. Check wiring between battery shelf being equipped with **BATTERY CHARGER** and power shelf (refer to SD-7C119-01). Repeat procedure from Step **26** after locating and correcting trouble.

33. Disconnect DMM test leads.

34. Unseat all of the **BATTERY CHARGER**s.

35. Are other **BATTERY CHARGER**s to be installed?

    If **YES,** then repeat from Step **22.**
    If **NO,** then **STOP. YOU HAVE COMPLETED THIS PROCEDURE.**

# Install 336A Rectifiers in J1C182BA Power Shelf

**SUMMARY:** Insert **336A RECTIFIER** into power shelf. Measure –42 to –56 V DC at **LDU** (–**48B**/**GND**). Unseat **336A RECTIFIER** and repeat for additional **336A RECTIFIER**s. Reseat all **336A RECTIFIER**s.

1.

**NOTE:**
Two **336A RECTIFIER**s are required for one dual bank assembly and an additional two **336A RECTIFIER**s (total of four) are required for a second dual bank assembly.

Get required number of **336A RECTIFIER**s and inspect for possible physical damage.

2.

**NOTE:**
All **BATTERY CHARGER**s must be unseated throughout this procedure.

Verify that fuse on **336A RECTIFIER**s (Figure 1) is not blown.

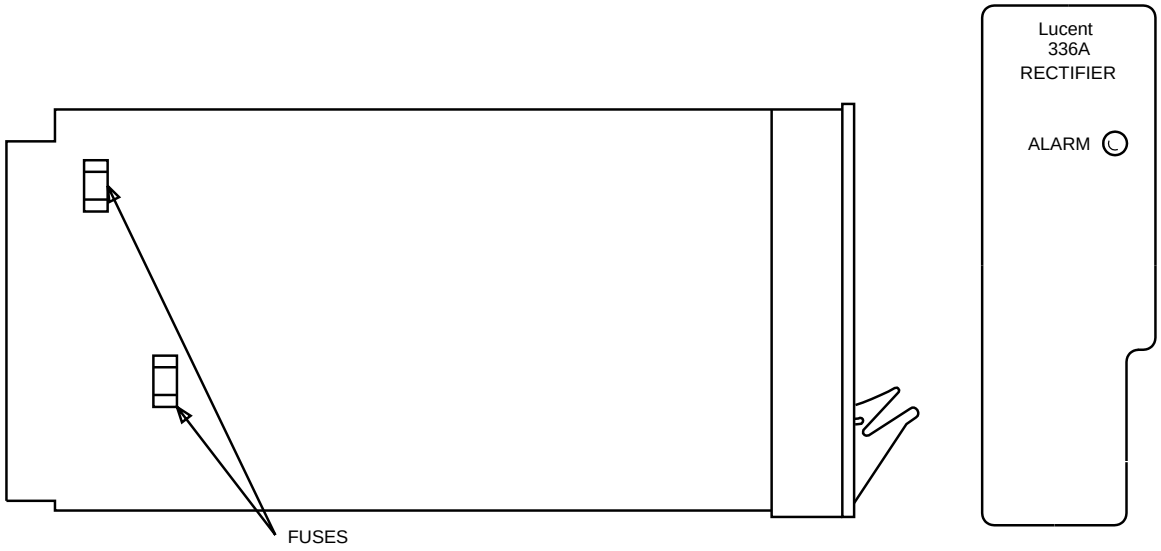


**Figure 1 – Location of Fuse on 336A RECTIFIER**

3. Insert one **336A RECTIFIER** into first vacant **RECT** slot (counting right to left) in power shelf (Figure 2).

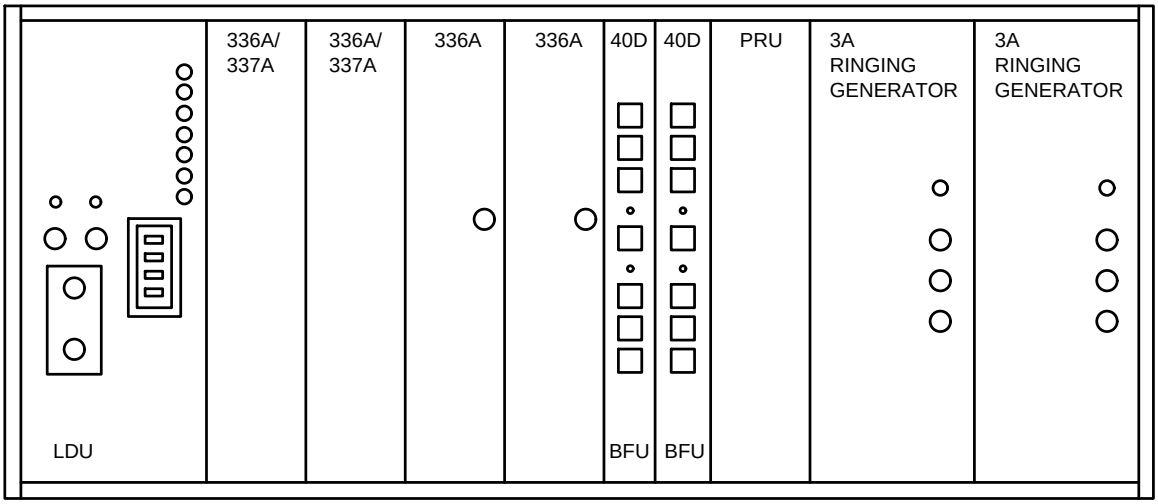


**Figure 2 – Power Shelf**

4. Condition DMM to measure DC volts.

5. Connect DMM test leads to **GND** jack and –**48B** jack on **LDU**.

6. Does DMM indicate between –42 and –56 volts?

   If **YES,** then proceed to Step **33.**
   If **NO,** then continue with Step **7.**

7. Condition DMM to measure AC volts.

8. Connect DMM test leads to **AC** jack and **GND** jack on **LDU**.

9. Does DMM indicate between 105 and 129 volts?

   If **YES,** then proceed to Step **27.**
   If **NO,** then continue with Step **10.**

10. Unseat **336A RECTIFIER**.

11. Connect DMM test leads to **AC** jack and **GND** jack on **LDU**.

12. Does DMM indicate between 105 and 129 volts?

    If **YES,** then continue with Step **13.**
    If **NO,** then proceed to Step **17.**

13. Replace **336A RECTIFIER**.

14. Connect DMM test leads to **AC** jack and **GND** jack on **LDU**.

15. Does DMM indicate between 105 and 129 volts?

    If **YES,** then proceed to Step **33.**
    If **NO,** then continue with Step **16.**

16. Replace **336A RECTIFIER** with original **336A RECTIFIER** removed previously and check wiring on power shelf using SD-7C119-01. Repeat procedure from Step **4** after locating and correcting trouble.

17. Check for presence of 105 to 129 volts AC at rear of power shelf.

18. Is correct voltage present?

    If **YES,** then continue with Step **19.**
    If **NO,** then proceed to Step **24.**

19. Replace **LDU**.

20. Connect DMM test leads to **AC** jack and **GND** jack on **LDU**.

21. Does DMM indicate between 105 and 129 volts?

    If **YES,** then proceed to Step **4.**
    If **NO,** then continue with Step **22.**

22. Replace **LDU** with original **LDU** removed previously.

23. Check wiring on power shelf using SD-7C119-01. Repeat procedure from Step **4** after trouble is found and corrected.

24. Operate AC power circuit breaker off and then back on.

25. Check for presence of 105 to 129 volts AC at rear of power shelf.

26. Is correct voltage present?

    If **YES,** then proceed to Step **4.**
    If **NO,** then **refer trouble to installation group.**

27. Replace **336A RECTIFIER**.

28. Condition DMM to measure DC volts.

29. Connect DMM test leads to –**48B** jack and **GND** jack on **LDU**.

30. Does DMM indicate between –42 and –56 volts?

    If **YES,** then proceed to Step **33.**
    If **NO,** then continue with Step **31.**

31. Replace **336A RECTIFIER** with **336A RECTIFIER** removed previously.

32. Check wiring on rear of power shelf using SD-7C119-01. Repeat procedure from Step **5** after trouble is found and corrected.

33. Is another **336A RECTIFIER** to be installed?

    If **YES,** then continue with Step **34.**
    If **NO,** then proceed to Step **36.**

34. Unseat **336A RECTIFIER**(s) installed previously.

35. Get another **336A RECTIFIER** and repeat from Step **2.**

36. Remove DMM test leads and reseat all **336A RECTIFIER**s.

    **STOP. YOU HAVE COMPLETED THIS PROCEDURE.**

# Perform Battery Charger Test

**SUMMARY:** Unseat all **BATTERY CHARGER**s. Reseat a **BATTERY CHARGER**. Verify that **BAT DISCHG** indicator goes off and remains off, **HIGH RATE CHG/ON** indicator lights, and **OPEN BAT** indicator is off. Unseat **BATTERY CHARGER** and repeat for additional **BATTERY CHARGER**s. Reseat all **BATTERY CHARGER**s. Remove AC power from system. Measure –42 to –56 V DC at **LDU** (–**48L/GND**). Restore AC power. Remove either **+BAT** or –**BAT** fuse on battery shelf. Verify that **OPEN BAT** indicator lights and **HIGH RATE CHG/ON** indicator is off. Replace **+BAT** or –**BAT** fuse. Verify that **OPEN BAT** indicator goes off. Repeat for other battery strings. Press **HIGH RATE CHG/ACTIVATE** button on **BATTERY CHARGER** and verify that **BAT DISCHG** indicator goes off and **HIGH RATE CHG/ON** indicator lights. Repeat for other **BATTERY CHARGER**s. Verify that **HIGH RATE CHG/ON** indicator(s) goes off within 24 hours.

1.

**NOTE:**
Throughout this procedure the **BAT DISCHG** and the **HIGH RATE CHG/ON** indicators on **BATTERY CHARGER** will light at steps indicated. The amount of time these indicators are lighted is a function of charge state of batteries. However, these indicators should at least light momentarily at appropriate steps.

Verify that all **336A RECTIFIER**s are seated and all **BATTERY CHARGER**s are unseated. Reseat one of the **BATTERY CHARGER**s while observing indicators on **BATTERY CHARGER** faceplate.

Response: **BAT DISCHG** indicator will light and remain lighted for a period of time determined by charge state of batteries.
If **BAT DISCHG** indicator remains lighted for more than 4 minutes, **BCU PMN** (or **P/M**) and **ADU NE** indicators will also light.
When **BAT DISCHG** indicator goes off, the **HIGH RATE CHG/ON** indicator will light and, if **BCU PMN** (or **P/M**) and **ADU NE** indicators are lighted, they will go off after 4 minutes.
The **HIGH RATE CHG/ON** indicator will go off after a period of time determined by charge state of batteries.

2. Does **BAT DISCHG** indicator on **BATTERY CHARGER** go off and remain off?

   If **YES,** then continue with Step **3.**
   If **NO,** then proceed to Step **4.**

3. Did **HIGH RATE CHG/ON** indicator come on?

   If **YES**, then proceed to Step **9**.
   If **NO**, then continue with Step **4**.

4. Replace **BATTERY CHARGER**.

   Response: **BAT DISCHG** indicator will light and remain lighted for a period of time determined by charge state of batteries.
   If **BAT DISCHG** indicator remains lighted for more than 4 minutes, **BCU PMN** (or **P/M**) and **ADU NE** indicators will also light.
   When **BAT DISCHG** indicator goes off, the **HIGH RATE CHG/ON** indicator will light and, if **BCU PMN** (or **P/M**) and **ADU NE** indicators are lighted, they will go off after 4 minutes.
   The **HIGH RATE CHG/ON** indicator will go off after a period of time determined by charge state of batteries.

5. Is **BAT DISCHG** indicator on **BATTERY CHARGER** off?

   If **YES,** then proceed to Step **9.**
   If **NO,** then continue with Step **6.**

6. Did **HIGH RATE CHG/ON** indicator come on?

   If **YES,** then proceed to Step **9.**
   If **NO,** then continue with Step **7.**

7. Replace **BATTERY CHARGER** with **BATTERY CHARGER** removed previously.

8. Check wiring from **LDU** to **BATTERY CHARGER** and from **LDU** to **336A RECTIFIER**s using SD-7C119-01. Repeat procedure from Step **2** after locating and correcting trouble.

9. Is **OPEN BAT** indicator on **BATTERY CHARGER** off?

   If **YES,** then proceed to Step **17.**
   If **NO,** then continue with Step **10.**

10. Check wiring and connections between battery string and **BATTERY CHARGER**.

11. Is wiring and connections present and properly connected?

    If **YES,** then proceed to Step **13.**
    If **NO,** then continue with Step **12.**

12. Repair wiring and/or connections and repeat from Step **9.**

13. Remove **BATTERY CHARGER** and examine charging fuse on unit.

14. Is fuse on **BATTERY CHARGER** blown?

    If **YES,** then proceed to Step **16.**
    If **NO,** then continue with Step **15.**

15. Check wiring on power shelf and battery shelf using SD-7C119-01. Repeat procedure from Step **9** after locating and correcting trouble.

16. Replace **BATTERY CHARGER**.

    Response: **BAT DISCHG** indicator will light and remain lighted for a period of time determined by charge state of batteries.
    If **BAT DISCHG** indicator remains lighted for more than 4 minutes, **BCU PMN** (or **P/M**) and **ADU NE** indicators will also light.
    When **BAT DISCHG** indicator goes off, the **HIGH RATE CHG/ON** indicator will light and, if **BCU PMN** (or **P/M**) and **ADU NE** indicators are lighted, they will go off after 4 minutes.
    The **HIGH RATE CHG/ON** indicator will go off after a period of time determined by charge state of batteries.

    Repeat from Step **2.**

17. Have all **BATTERY CHARGER**s been checked?

    If **YES,** then proceed to Step **20.**
    If **NO,** then continue with Step **18.**

18. Unseat all **BATTERY CHARGER**s.

19. Reseat another **BATTERY CHARGER** while observing indicators on **BATTERY CHARGER** faceplate.

    Response: **BAT DISCHG** indicator will light and remain lighted for a period of time determined by charge state of batteries.
    If **BAT DISCHG** indicator remains lighted for more than 4 minutes, **BCU PMN** (or **P/M**) and **ADU NE** indicators will also light.
    When **BAT DISCHG** indicator goes off, the **HIGH RATE CHG/ON** indicator will light and, if **BCU PMN** (or **P/M**) and **ADU NE** indicators are lighted, they will go off after 4 minutes.
    The **HIGH RATE CHG/ON** indicator will go off after a period of time determined by charge state of batteries.

    Repeat from Step **2.**

20. Reseat all **BATTERY CHARGER**s.

21. **CAUTION:**
    *Removing AC power from a working system will cause a transfer to battery supply, bring up a CO alarm, and eventually cause a service interruption.*

    Turn off circuit breaker providing AC power to system under test.

    Response: **BAT DISCHG** indicators on all **BATTERY CHARGER**s are lighted. **ALARM** indicators on all **336A RECTIFIER**s are lighted.

22. Condition DMM to measure DC volts.

23. Connect DMM test leads to **GND** jack and –**48L** jack on **LDU**.

24. Does DMM indicate between –42 and –56 volts?

    If **YES,** then proceed to Step **29.**
    If **NO,** then continue with Step **25.**

25. Connect DMM test leads to **GND** jack and –**48B** jack on **LDU**.

26. Does DMM indicate between –42 and –56 volts?

    If **YES,** then continue with Step **27.**
    If **NO,** then proceed to Step **28.**

27. Replace **LDU** and repeat from Step **23.**

28. Check wiring between power shelf and battery shelf using SD-7C119-01. Repeat procedure from Step **23** after locating and correcting trouble.

29. Remove DMM test leads and turn on circuit breaker providing AC power to system under test.

    Response: **BAT DISCHG** indicators on all **BATTERY CHARGER**s and **ALARM** indicators on **336A RECTIFIER**s go off and **HIGH RATE CHG/ON** indicators on all **BATTERY CHARGER**s light. The **HIGH RATE CHG/ON** indicator will go off after a period of time determined by charge state of batteries.

30. Remove either **+BAT** or –**BAT** fuse from one of the battery shelves.

31. Does **OPEN BAT** indicator on associated **BATTERY CHARGER** light and **HIGH RATE CHG/ON** indicator go off?

    If **YES,** then proceed to Step **37.**
    If **NO,** then continue with Step **32.**

32. Replace **BATTERY CHARGER** being checked.

    Response: **BAT DISCHG** indicator will light and remain lighted for a period of time determined by charge state of batteries.
    If **BAT DISCHG** indicator remains lighted for more than 4 minutes, **BCU PMN** (or **P/M**) and **ADU NE** indicators will also light.
    When **BAT DISCHG** indicator goes off, the **HIGH RATE CHG/ON** indicator will light and, if **BCU PMN** (or **P/M**) and **ADU NE** indicators are lighted, they will go off after 4 minutes.
    The **HIGH RATE CHG/ON** indicator will go off after a period of time determined by charge state of batteries.

33. Does **OPEN BAT** indicator on **BATTERY CHARGER** light and **HIGH RATE CHG/ON** indicator go off?

    If **YES,** then continue with Step **34.**
    If **NO,** then proceed to Step **35.**

34. Unseat all **BATTERY CHARGER**s except last one replaced and repeat from Step **2.**

35. Replace **BATTERY CHARGER** with **BATTERY CHARGER** removed previously.

    Response: **BAT DISCHG** indicator will light and remain lighted for a period of time determined by charge state of batteries.
    If **BAT DISCHG** indicator remains lighted for more than 4 minutes, **BCU PMN** (or **P/M**) and **ADU NE** indicators will also light.
    When **BAT DISCHG** indicator goes off, the **HIGH RATE CHG/ON** indicator will light and, if **BCU PMN**(or **P/M**) and **ADU NE** indicators are lighted, they will go off after 4 minutes.
    The **HIGH RATE CHG/ON** indicator will go off after a period of time determined by charge state of batteries.

36. Check wiring on power shelf using SD-7C119-01. Repeat procedure from Step **31** after locating and correcting trouble.

37. Install battery shelf **+BAT** or –**BAT** fuse removed previously.

    Response: All indicators on **BATTERY CHARGER** are off.

38. Does **OPEN BAT** indicator go off?

    If **YES,** then proceed to Step **44.**
    If **NO,** then continue with Step **39.**

39. Replace **BATTERY CHARGER**.

    Response: **BAT DISCHG** indicator will light and remain lighted for a period of time determined by charge state of batteries.
    If **BAT DISCHG** indicator remains lighted for more than 4 minutes, **BCU PMN** (or **P/M**) and **ADU NE** indicators will also light.
    When **BAT DISCHG** indicator goes off, the **HIGH RATE CHG/ON** indicator will light and, if **BCU PMN** (or **P/M**) and **ADU NE** indicators are lighted, they will go off after 4 minutes.
    The **HIGH RATE CHG/ON** indicator will go off after a period of time determined by charge state of batteries.

40. Is **OPEN BAT** indicator on **BATTERY CHARGER** off and **HIGH RATE CHG/ON** indicator off?

    If **YES,** then continue with Step **41.**
    If **NO,** then proceed to Step **42.**

41. Unseat all **BATTERY CHARGER**s except last one replaced and repeat from Step **2.**

42. Replace **BATTERY CHARGER** with **BATTERY CHARGER** removed previously.

    Response: **BAT DISCHG** indicator will light and remain lighted for a period of time determined by charge state of batteries.
    If **BAT DISCHG** indicator remains lighted for more than 4 minutes, **BCU PMN** (or **P/M**) and **ADU NE** indicators will also light.
    When **BAT DISCHG** indicator goes off, the **HIGH RATE CHG/ON** indicator will light and, if **BCU PMN** (or **P/M**) and **ADU NE** indicators are lighted, they will go off after 4 minutes.
    The **HIGH RATE CHG/ON** indicator will go off after a period of time determined by charge state of batteries.

43. Check wiring on power shelf using SD-7C119-01. Repeat procedure from Step **38** after locating and correcting trouble.

44. Has **OPEN BAT** indicator on all **BATTERY CHARGER**s been checked?

    If **YES,** then proceed to Step **46.**
    If **NO,** then continue with Step **45.**

45. Go to next battery shelf, remove either **+BAT** or –**BAT** fuse and repeat from Step **31.**

46. Press **HIGH RATE CHG**/**ACTIVATE** pushbutton on one of the **BATTERY CHARGER**s.

    Response: **BAT DISCHG** indicator will light and remain lighted for a period of time determined by charge state of batteries.
    If **BAT DISCHG** indicator remains lighted for more than 4 minutes, **BCU PMN** (or **P/M**) and **ADU NE** indicators will also light.
    When **BAT DISCHG** indicator goes off, the **HIGH RATE CHG/ON** indicator will light and, if **BCU PMN** (or **P/M**) and **ADU NE** indicators are lighted, they will go off after 4 minutes.
    The **HIGH RATE CHG/ON** indicator will go off after a period of time determined by charge state of batteries.

47. Does **BAT DISCHG** indicator go off and **HIGH RATE CHG/ON** indicator light on **BATTERY CHARGER**?

    If **YES,** then proceed to Step **53.**
    If **NO,** then continue with Step **48.**

48. Replace **BATTERY CHARGER**.

    Response: **BAT DISCHG** indicator will light and remain lighted for a period of time determined by charge state of batteries.
    If **BAT DISCHG** indicator remains lighted for more than 4 minutes, **BCU PMN** (or **P/M**) and **ADU NE** indicators will also light.
    When **BAT DISCHG** indicator goes off, the **HIGH RATE CHG/ON** indicator will light and, if **BCU PMN** (or **P/M**) and **ADU NE** indicators are lighted, they will go off after 4 minutes.
    The **HIGH RATE CHG/ON** indicator will go off after a period of time determined by charge state of batteries.

49. Press **HIGH RATE CHG**/**ACTIVATE** pushbutton on **BATTERY CHARGER** after **BAT DISCHG** indicator goes off.

    Response: **BAT DISCHG** indicator will light and remain lighted for a period of time determined by charge state of batteries.
    If **BAT DISCHG** indicator remains lighted for more than 4 minutes, **BCU PMN** (or **P/M**) and **ADU NE** indicators will also light.
    When **BAT DISCHG** indicator goes off, the **HIGH RATE CHG/ON** indicator will light and, if **BCU PMN** (or **P/M**) and **ADU NE** indicators are lighted, they will go off after 4 minutes.
    The **HIGH RATE CHG/ON** indicator will go off after a period of time determined by charge state of batteries.

50. Does **BAT DISCHG** indicator go off and **HIGH RATE CHG/ON** indicator light on **BATTERY CHARGER**?

    If **YES,** then proceed to Step **53.**
    If **NO,** then continue with Step **51.**

51. Replace **BATTERY CHARGER** with **BATTERY CHARGER** removed previously.

    Response: **BAT DISCHG** indicator will light and remain lighted for a period of time determined by charge state of batteries.
    If **BAT DISCHG** indicator remains lighted for more than 4 minutes, **BCU PMN** (or **P/M**) and **ADU NE** indicators will also light.
    When **BAT DISCHG** indicator goes off, the **HIGH RATE CHG/ON** indicator will light and, if **BCU PMN** (or **P/M**) and **ADU NE** indicators are lighted, they will go off after 4 minutes.
    The **HIGH RATE CHG/ON** indicator will go off after a period of time determined by charge state of batteries.

52. Check wiring on power shelf using SD-7C119-01. Repeat procedure from Step **46** after locating and correcting trouble.

53. Has **HIGH RATE CHG**/**ACTIVATE** pushbutton been pressed on all **BATTERY CHARGER**s?

    If **YES,** then proceed to Step **55.**
    If **NO,** then continue with Step **54.**

54. Go to next **BATTERY CHARGER** and repeat from Step **46.**

55.

    **NOTE:**
    Performance of this step is optional because of the possibility of having to return to remote terminal site the following day to complete test. The **HIGH RATE CHG/ON** indicator on **BATTERY CHARGER** may only be lighted momentarily.

    Does **HIGH RATE CHG/ON** indicator on **BATTERY CHARGER** go off within 24 hours?

    If **YES,** then proceed to Step **57.**
    If **NO,** then continue with Step **56.**

56. Replace **BATTERY CHARGER** and repeat from Step **1.**

57. Have **LDU**, **BATTERY CHARGER**(s), **336A RECTIFIER**s, and all available batteries been inserted into their respective slots?

    If **YES,** then **STOP. YOU HAVE COMPLETED THIS PROCEDURE.**
    If **NO,** then continue with Step **58.**

58. Insert **LDU**, **BATTERY CHARGER**(s), **336A RECTIFIER**s, and batteries into their respective slots.

    **STOP. YOU HAVE COMPLETED THIS PROCEDURE.**

# Install 3C( ) Ringing Generators in Power Shelf

**SUMMARY:** Insert Main **3C( ) RINGING GENERATOR** into left **RING GEN** slot in power shelf. Measure 90 to 110 V AC and –50 to –60 V DC at **LDU** (–**20HZ**/**GND**). Unseat main **RINGING GENERATOR**, install spare **RINGING GENERATOR** and repeat. Reseat main **RINGING GENERATOR** and press and hold **TEST PROT RG** button on **LDU**. Verify that **FAIL** indicator on spare **RINGING GENERATOR** is off and **FAIL** indicator on main **RINGING GENERATOR** is lighted.

1. Get two **3C( ) RINGING GENERATOR**s and inspect for possible physical damage.

2. ⚠ **CAUTION:**
   *Damage to 3C( ) RINGING GENERATOR and shelf connector may occur if 3C( ) RINGING GENERATOR is forced into position.*

   Insert one **3C( ) RINGING GENERATOR** into main (left) **RING GEN** slot in power shelf.

3. Condition DMM to measure AC volts.

4. On **LDU**, connect DMM test leads to –**20 HZ** jack and **GND** jack.

5. Does DMM indicate between 90 and 110 volts?

   If **YES,** then continue with Step **6.**
   If **NO,** then proceed to Step **8.**

6. Condition DMM to measure DC volts.

7. Does DMM indicate between –50 and –60 volts?

   If **YES,** then proceed to Step **23.**
   If **NO,** then continue with Step **8.**

8. Is **FAIL** indicator on **RINGING GENERATOR** off?

   If **YES,** then proceed to Step **10.**
   If **NO,** then continue with Step **9.**

9. Replace **RINGING GENERATOR** and repeat from Step **3.**

10. Condition DMM to measure DC volts.

11. On **RINGING GENERATOR**, connect DMM test leads to –**48V** jack and **GND** jack.

12. Does DMM indicate between –42 and –56 volts?

    If **YES,** then proceed to Step **14.**
    If **NO,** then continue with Step **13.**

13. Check wiring on power shelf connecting to **RINGING GENERATOR**. Repeat procedure from Step **3** after locating and correcting trouble.

14. Condition DMM to measure AC volts.

15. On **LDU**, connect DMM test leads to –**20 HZ** jack and **GND** jack.

16. Does DMM indicate between 90 and 110 volts?

    If **YES,** then continue with Step **17.**
    If **NO,** then proceed to Step **20.**

17. Condition DMM to measure DC volts.

18. On **LDU**, connect DMM test leads to –**20 HZ** jack and **GND** jack.

19. Does DMM indicate between –50 and –60 volts?

    If **YES,** then proceed to Step **21.**
    If **NO,** then continue with Step **20.**

20. Replace **RINGING GENERATOR** and repeat from Step **3.**

21. Is **FAIL** indicator on **RINGING GENERATOR** off?

    If **YES,** then proceed to Step **23.**
    If **NO,** then continue with Step **22.**

22. Replace **RINGING GENERATOR** and repeat from Step **3.**

23. Disconnect DMM test leads.

24. Have both **RINGING GENERATOR**s been tested?

    If **YES,** then proceed to Step **27.**
    If **NO,** then continue with Step **25.**

25. Unseat main **RINGING GENERATOR**.

26. Insert remaining **RINGING GENERATOR** into spare (vacant) **RING GEN** slot in power shelf and repeat from Step **3.**

27. Reseat main **RINGING GENERATOR**.

28.

    **NOTE:**
    The **TEST PROT RG** pushbutton on **LDU** must be pressed while viewing indicators during this procedure in order to obtain correct results.

    Press and hold down **TEST PROT RG** pushbutton on **LDU**.

29. Is **FAIL** indicator on protection (right) **RINGING GENERATOR** off and **FAIL** indicator on main (left) **RINGING GENERATOR** lighted?

    If **YES,** then proceed to Step **33.**
    If **NO,** then continue with Step **30.**

30. Release **TEST PROT RG** pushbutton on **LDU**.

31. Replace protection **RINGING GENERATOR**.

32. Unseat main **RINGING GENERATOR** and repeat from Step **3.**

33. Release **TEST PROT RG** pushbutton.

    **STOP. YOU HAVE COMPLETED THIS PROCEDURE.**

# Install AUG1 Positive Ring Unit in J1C182BA Power Shelf

**SUMMARY: Verify presence of correct fuses and insert AUG1 PRU** into **PRU** slot in power shelf. Measure 90 to 110 V AC and –50 to –60 V DC at –**20HZ** jack, 90 to 110 V AC and 50 to 60 V DC at **+20HZ** jack, and –42 to –56 V DC at –**48V** jack.

1. Get one **AUG1 PRU** (Figure 1) and inspect for possible physical damage.

2. Verify that each fuse holder on faceplate of **PRU** contains an 80G (0.5A) fuse (red bead) and that fuses are not blown (fuse is blown when bead protrudes from hole in faceplate). If a fuse is blown, use **WECO 553A** Extractor Tool (Techni-Tool No. 594TE170) or **WECO 319B** (KS-6305) Extractor Tool (Techni-Tool No. 490PL020) to remove it.

3. Insert **AUG1 PRU** into **PRU** slot in power shelf.

4. Do any fuses on **PRU** blow?

   If **YES,** then continue with Step **5.**
   If **NO,** then proceed to Step **10.**

5. Replace blown fuse(s) on **PRU** using **WECO 553A** Extractor Tool (Techni-Tool No. 594TE170) or **WECO 319B** (KS-6305) Extractor Tool (Techni-Tool No. 490PL020).

6. Do any fuses on **PRU** blow?

   If **YES,** then continue with Step **7.**
   If **NO,** then proceed to Step **10.**

7. Check wiring using SD-7C119-01.

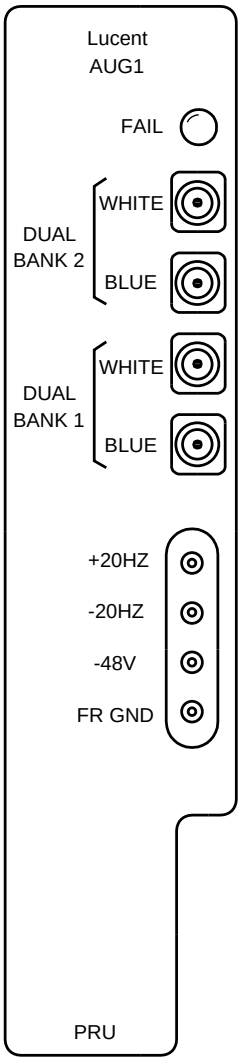


**Figure 1 – AUG1 Positive Ring Unit**

8. Is wiring correct?

   If **YES,** then get another **PRU** and repeat from Step **2.**
   If **NO,** then continue with Step **9.**

9. Repair wiring and replace blown fuses in **PRU**.

10. Condition digital multimeter (DMM) to measure DC volts.

11. On **PRU**, connect DMM test leads to –**48** jack and **FR GND** jack.

12. Does DMM indicate between –42 and –56 volts?

    If **YES,** then proceed to Step **14.**
    If **NO,** then continue with Step **13.**

13. Check wiring on power shelf between **336A RECTIFIER** and **PRU** using SD-7C119-01. Repeat procedure from Step **11** after locating and correcting trouble.

14. On **PRU**, connect DMM test leads to –**20HZ** jack and **FR GND** jack.

    Response: DMM indicates between –50 and –60 volts.

15. Leave DMM test leads connected to –**20HZ** and **FR GND** jacks and condition DMM to measure AC volts.

    Response: DMM indicates between 90 and 110 volts.

16. Is AC/DC ringing voltages present at –**20HZ** jack on the **PRU**?

    If **YES,** then proceed to Step **18.**
    If **NO,** then continue with Step **17.**

17. Check wiring on power shelf between **3C RINGING GENERATOR** and **PRU** using SD-7C119-01. Repeat procedure from Step **14** after locating and correcting trouble.

18. Condition DMM to measure DC volts.

19. On **PRU**, connect DMM test leads to **+20HZ** jack and **FR GND** jack.

    Response: DMM indicates between 50 and 60 volts.

20. Leave DMM test leads connected to **+20HZ** and **FR GND** jacks and condition DMM to measure AC volts.

    Response: DMM indicates between 90 and 110 volts.

21. Is AC/DC ringing voltages present at **+20HZ** jack on the **PRU**?

    If **YES,** then **STOP. YOU HAVE COMPLETED THIS PROCEDURE.**
    If **NO,** then continue with Step **22.**

22. Replace **PRU** and repeat procedure from Step **2**.

# Install Bank Fuse Unit (BFU) in Power Shelf

**SUMMARY:** The **AUG11** or **40D BFU** is used in the J1C182BA, J1C182BB, or J1C182PB-1 power shelf. The BFU (without fuses) should be installed with the power shelf equipped The the fuses are installed to verify that they do not blow.

1. Verify -48 volts DC (-42 to -56) on one of the following units installed in the power shelf;
   - **GND** to **-48L** on **LDU**,
   - **GND** to **-48L** on **RCU**,
   - **GND** to **-48L** (1) (2) (3) on **RSU**,
   - **-48RTN( )** to **-48V( )** on **TB1** of J1C182PB shelf.
2. Get required number of **BFU**s (refer to Figure 1 and Table A) to be inserted into RT power shelf.

**Table A**

**BFU Locations**

| **BFU** | **Associated Equipment** | | |
|---|---|---|---|
| Slot | J1C182PB-1 | J1C182BA | J1C182BB |
| BFU1 | Optical Shelves 1 & 2 | Lower DCBA | Lower DCBA |
| BFU2 | Optical Shelves 3 & 4 | Upper * DCBA | Middle DCBA |
| BFU3 | Lower DCBA | NA | Upper DCBA |
| BFU4 | Upper DCBA | NA | NA |

DCBA = Dual Channel Bank Assembly
* Not used in a 51-type cabinet, used for a DDM-1000 or DDM-2000 (if equipped) in other type cabinets.

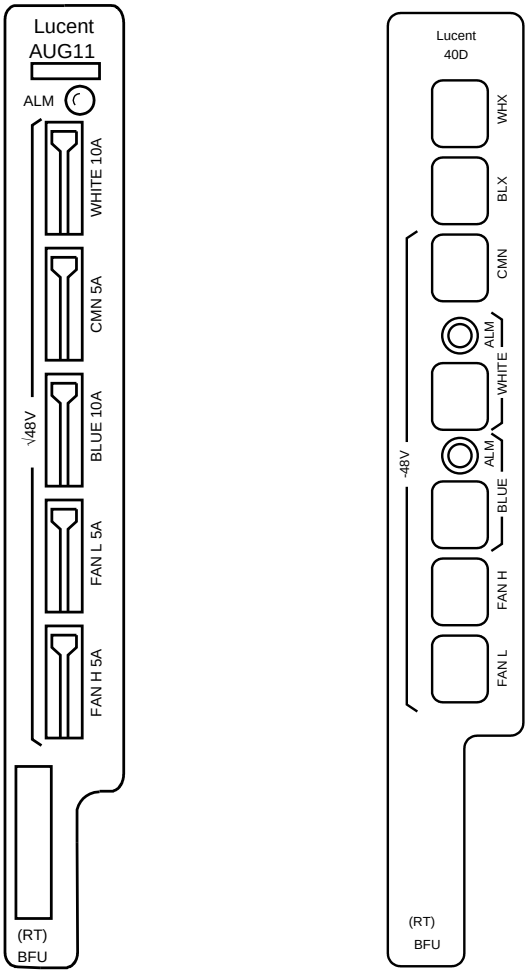


**Figure 1 – AUG11 and 40D Bank Fuse Unit**

3. Remove any fuses installed in the **BFU** before inserting this unit.

4. Insert one of the **BFU**s into the appropriate **BFU( )** slot in the RT power shelf (Table A).

| Table B<br><br>AUG11 BFU Fuses | | |
|---|---|---|
| **Fuse Designation** | **Size** | **Code** |
| WHITE | 10A | WP90247 L115 |
| CMN* | 5A | WP90247 L113 |
| BLUE | 10A | WP90247 L115 |
| FAN L | 5A | WP90247 L113 |
| FAN H | 5A | WP90247 L113 |
| * Not required in BFUs feeding a DDM-1000 or DDM-2000 Multiplexer. | | |

| Table C<br><br>40D BFU Fuses | | | |
|---|---|---|---|
| **Fuse Designation** | **Bead Color** | **Size** | **Code** |
| WHX* | Blue | 3A | 80C |
| BLX* | Blue | 3A | 80C |
| CMN* | Green | 5A | 80D |
| WHITE | Yellow | 10A | 81A |
| BLUE | Yellow | 10A | 81A |
| FAN L | Green | 5A | 80D |
| FAN H | Green | 5A | 80D |
| * Not required in BFUs feeding a DDM-1000 or DDM-2000 Multiplexer. | | | |

5.

**NOTE:**
The faceplate mounted fuses on the AUG11 may make a popping sound when installed.

Install the correct value fuses (Table B or Table C) in fuse holders on faceplate of **AUG11** or **40D BFU**.

6.

**NOTE:**
Each 40D BFU fuse bead, except the yellow fuse beads, will pop out when the fuse blows. The AUG11 ALM indicator light and the fuse flag pops out when the fuse blows.

Do any fuses on **BFU** blow?

If **YES,** then continue with Step **7.**
If **NO,** then proceed to Step **10.**

7. Replace blown fuse(s) on **AUG11 BFU** using **WP90247 L201** Insertion/Extraction tool; or **WECO 553A** Extractor Tool (Techni-Tool No. 594TE170) or **WECO 319B** (KS-6305) Extractor Tool (Techni-Tool No. 490PL020) for the **40D BFU**.

8. Do any fuses on **BFU** blow?

   If **YES,** then continue with Step **9.**
   If **NO,** then proceed to Step **10.**

9. Check wiring using SD-7C130-01 or SD-7C119-01.

10. Is another **BFU** to be installed at this time?

    If **YES,** then continue with Step **11.**
    If **NO,** then **STOP. YOU HAVE COMPLETED THIS PROCEDURE.**

11. Repeat the procedure from Step **3** for next **BFU** to be installed.

# Install and Test Power Converter Unit (PCU) in Facility Shelf

**SUMMARY:** Install **PCU** in facility shelf and verify that **FAIL** indicator goes off and remains off. Measure –42 to –56 V DC at **PCU** faceplate.

1. Get one **AUA11( ) PCU** and inspect for possible damage.

2. Insert **PCU** into **PCU** slot in facility (middle) shelf.

3. 

   **NOTE:**
   **FAIL** indicator on **PCU** may light momentarily when inserted into RT.

   Does **FAIL** indicator on **PCU** go off and remain off?

   If **YES,** then proceed to Step **8.**
   If **NO,** then continue with Step **4.**

4. Replace **PCU**.

5. 

   **NOTE:**
   **FAIL** indicator on **PCU** may light momentarily when inserted into RT.

   Does **FAIL** indicator on **PCU** go off and remain off?

   If **YES,** then proceed to Step **8.**
   If **NO,** then continue with Step **6.**

6. Replace **PCU** with **PCU** removed previously.

7. Use SD-7C117-01 or SD-7C117-02 to check bank wiring. Repeat procedure from Step **3** after locating and correcting trouble.

8. Condition DMM to measure volts DC.

9. On **PCU**, connect DMM test leads to **GND** jack and –**48** jack.

10. Does DMM indicate between –42 and –56 volts?

    If **YES,** then proceed to Step **31.**
    If **NO,** then continue with Step **11.**

11. Verify that wiring from power shelf to **PCU** in facility shelf is present and connected properly.

12. Is wiring present and connected properly?

    If **YES,** then proceed to Step **14.**
    If **NO,** then continue with Step **13.**

13. Resolve problem through local procedures. Repeat procedure from Step **3** after locating and correcting trouble.

14. Is system being equipped with FTTH (Fiber-To-The-Home) feature?

    If **YES,** then continue with Step **15.**
    If **NO,** then proceed to Step **18.**

15. At **BFU3** or **BFU4** in optics power shelf, is fuse –**48 WHITE**, –**48 BLUE**, or –**48 CMN** blown?

    If **YES,** then continue with Step **16.**
    If **NO,** then proceed to Step **18.**

16. Replace blown fuse(s).

17. Does fuse(s) blown again?

    If **YES,** then continue with Step **29.**
    If **NO,** then proceed to Step **8.**

18. Replace **PCU** in facility shelf.

19. Is **FAIL** indicator on **PCU** off?

    If **YES,** then continue with Step **20.**
    If **NO,** then proceed to Step **4.**

20. On **PCU**, connect DMM test leads to **GND** jack and –**48** jack.

21. Does DMM indicate between –42 and –56 volts?

    If **YES,** then proceed to Step **31.**
    If **NO,** then continue with Step **22.**

22. Replace **PCU** with **PCU** removed previously.

23. Is **PCU** being installed in a frame-type RT with bulk powering (J1C182BB bulk power shelf)?

    If **YES,** then proceed to Step **30.**
    If **NO,** then continue with Step **24.**

24.

    **NOTE:**
    Two dual bank assemblies share a common power shelf.

    Is **PCU** being installed in second dual bank assembly?

    If **YES,** then continue with Step **25.**
    If **NO,** then proceed to Step **29.**

25. Replace associated **336A RECTIFIER** located in power shelf.

26. On **PCU**, connect DMM test leads to **GND** jack and –**48** jack.

27. Does DMM indicate between –42 and –56 volts?

    If **YES,** then proceed to Step **31.**
    If **NO,** then continue with Step **28.**

28. Replace **336A RECTIFIER** with **336A RECTIFIER** removed previously.

29. Check wiring using SD-7C117-01 or SD-7C117-02 and, if system is being equipped with FTTH feature, also use SD-7C118-02 and SD-7C150-01. Repeat procedure from Step **3** after locating and correcting trouble.

30. Check fuses in RT dual bank assembly **LFU** and bulk power shelf **BFU**. If trouble is not found, check wiring at RT dual bank assembly and bulk power shelf using SD-7C117-01 or SD-7C117-02 and SD-7C130-01, respectively. Repeat procedure from Step **3** after locating and correcting trouble.

31. Disconnect DMM test leads.

    **STOP. YOU HAVE COMPLETED THIS PROCEDURE.**

# Perform Installation and Tests of Batteries in Existing Frame-Type or 80-Type (ED-7C621-30 or ED-97977-30) Cabinet RT

**SUMMARY:** Install and connect four KS-21906, L4 battery packs on battery shelf. Measure voltage greater than 45 V DC at battery shelf. Repeat for additional battery shelves. Install fuses in battery shelves. Connect **J113** to **P113** on battery shelves.

1. **DANGER:**
   *High current flow will occur if short is placed across battery terminals. No attempt should be made to measure battery voltage across terminals.*

   Get four KS-21906, L4 battery packs for each battery shelf to be equipped.

2. Ensure that connectors **J113** and **P113** on rear of battery shelves being equipped are not connected.

3. On front of battery shelves, remove front covers by lifting covers up and out (Figure 1).

4. Place batteries on battery shelves and dress battery cables as each battery pack is placed on shelf (Figure 2).

5. **NOTE:**
   The four battery lead jacks can be plugged into any four plugs on shelf, in any order.

   Connect four battery lead jacks to four plugs (**P1, P2, P3,** and **P4**) on each battery shelf being equipped.

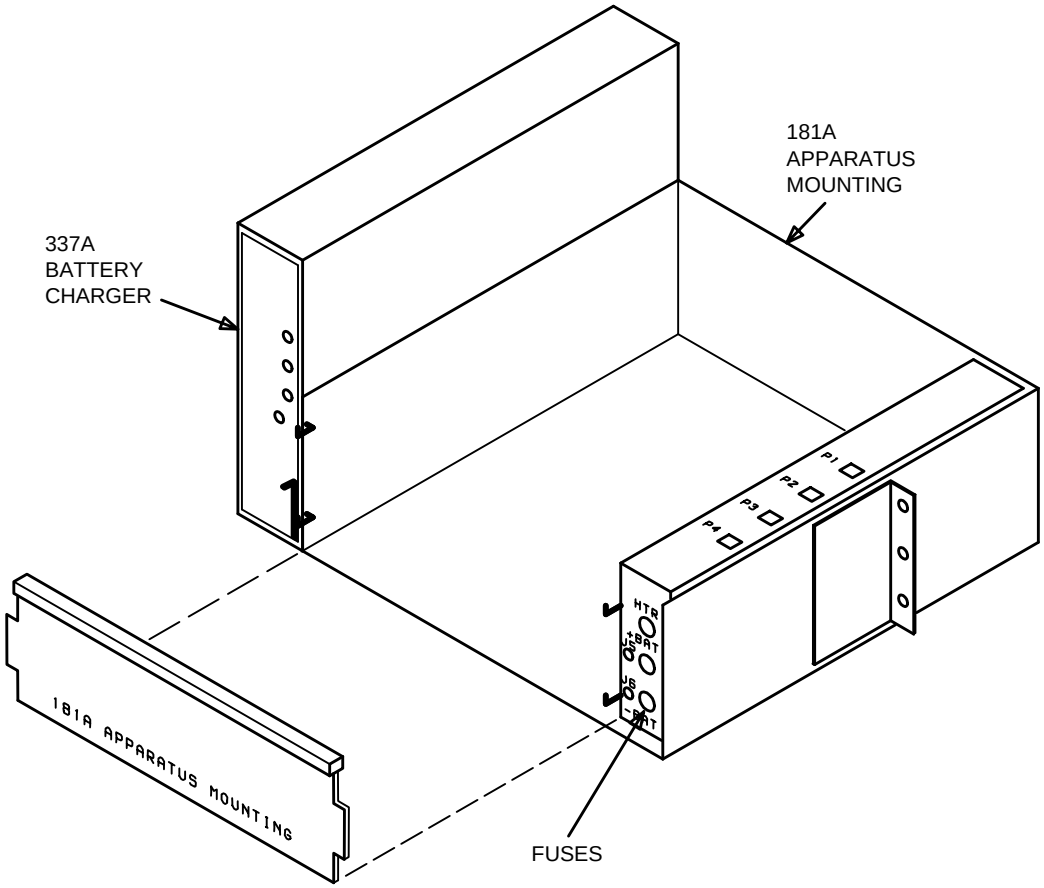


**Figure 1 – Battery Shelf**

6. Reinstall front covers on battery shelves by pushing the bottom of the cover into the bottom slots at the ends of the panel and then pushing the rolled-over lip, at the top of the cover, over the top two nubs.

7. Condition DMM to measure DC volts.

8. On battery shelf, connect DMM test leads to **+BAT** jack (**J5**) and –**BAT** jack (**J6**).

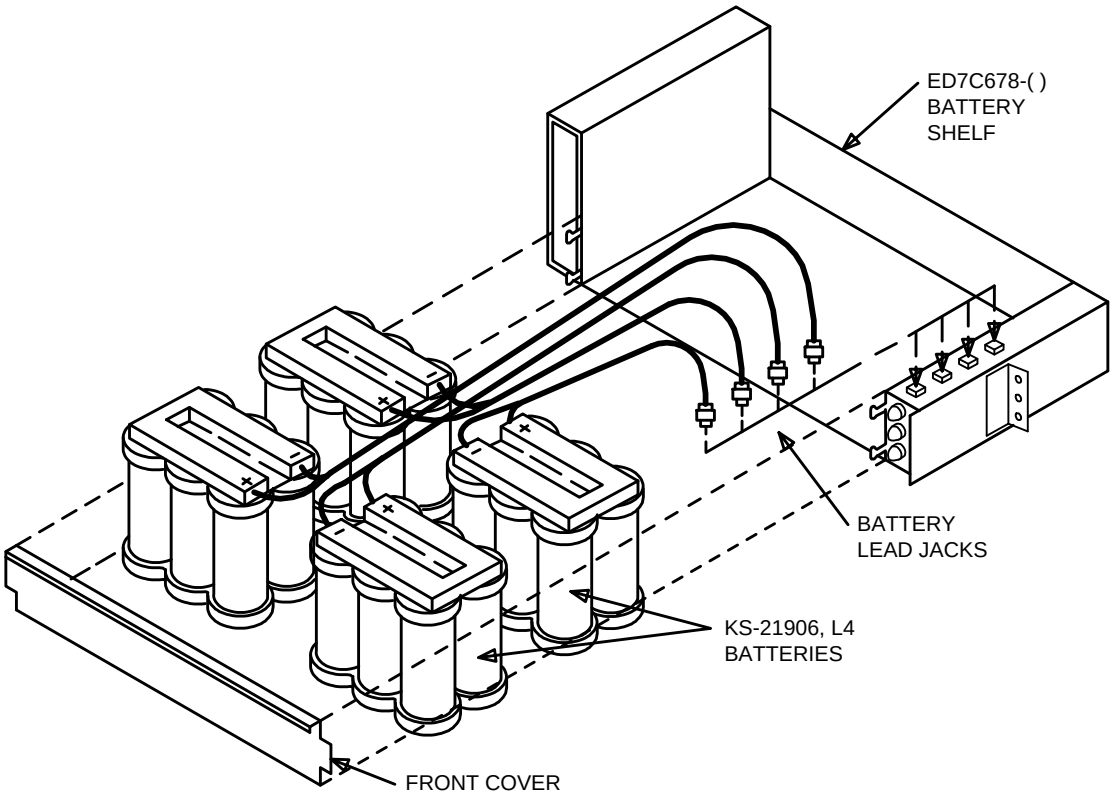


**Figure 2 – Battery Placement and Connections**

9. Does meter indicate greater than 45.0 volts DC?

   If **YES,** then proceed to Step **18.**
   If **NO,** then continue with Step **10.**

10. Check battery lead connections at battery shelf.

11. Does meter indicate greater than 45.0 volts DC?

   If **YES,** then proceed to Step **18.**
   If **NO,** then continue with Step **12.**

12.

> **NOTE:**
> If voltage requirements are not met after replacement battery pack is installed, original battery pack should be reinstalled in battery shelf.

Replace one battery pack.

13. On battery shelf, connect DMM test leads to **+BAT** jack (**J5**) and –**BAT** jack (**J6**).

14. Does meter indicate greater than 45.0 volts DC?

    If **YES,** then proceed to Step **18.**
    If **NO,** then continue with Step **15.**

15. Have all battery packs been replaced?

    If **YES,** then continue with Step **16.**
    If **NO,** then proceed to Step **17.**

16. Check wiring and connectors on battery shelf. Repeat procedure from Step **8** after locating and correcting trouble.

17.

> **NOTE:**
> If voltage requirements are not met after replacement battery pack is installed, original battery pack should be reinstalled in battery shelf.

Replace another battery pack and repeat from Step **13.**

18. Have all equipped battery shelves been tested?

    If **YES,** then proceed to Step **20.**
    If **NO,** then continue with Step **19.**

19. Go to next battery shelf and repeat from Step **8.**

20. Remove DMM. Install good fuses (15-amp) into **+BAT** and –**BAT** fuse holders of all battery shelves equipped with batteries.

21. Insert connector **J113** into connector **P113** on battery shelf.

**STOP. YOU HAVE COMPLETED THIS PROCEDURE.**

# Perform Installation and Tests of Batteries for Existing 51-Type (ED-7C601-30) Cabinet RT

**SUMMARY:** Install and connect four KS-21906, L4 battery packs in each battery shelf. With fuses removed, measure voltage greater than 45 V DC at power panel (string 2) or at battery shelf (string 3). Install battery and heater fuses. Connect **J113** to **P113** on battery shelf.

1. Ensure that connector **J113** from power shelf is not connected to connector **P113** on battery shelf.

2. **DANGER:**
   *High current flow will occur if short is placed across battery terminals. No attempt should be made to measure battery voltage across terminals.*

   **NOTE:**
   Lower two battery shelves house battery string 1 and upper two battery shelves house battery string 2 (when installed). If additional battery string (battery string 3) is required, a 181A apparatus mounting can be installed in top of battery section to house it.

   Get four KS-21906, L4 battery packs.

3. Is battery string 2 being installed?

   If **YES,** then continue with Step **4.**
   If **NO,** then proceed to Step **20.**

4. Place batteries on battery shelves and dress battery cables as each battery pack is placed on shelf.

5. In battery section of cabinet at power panel (Figure 1), refer to Table A and remove the fuses associated with battery string 2 (either **F1**, **F2**, and **F6** or **F3**, **F4**, and **F6**).

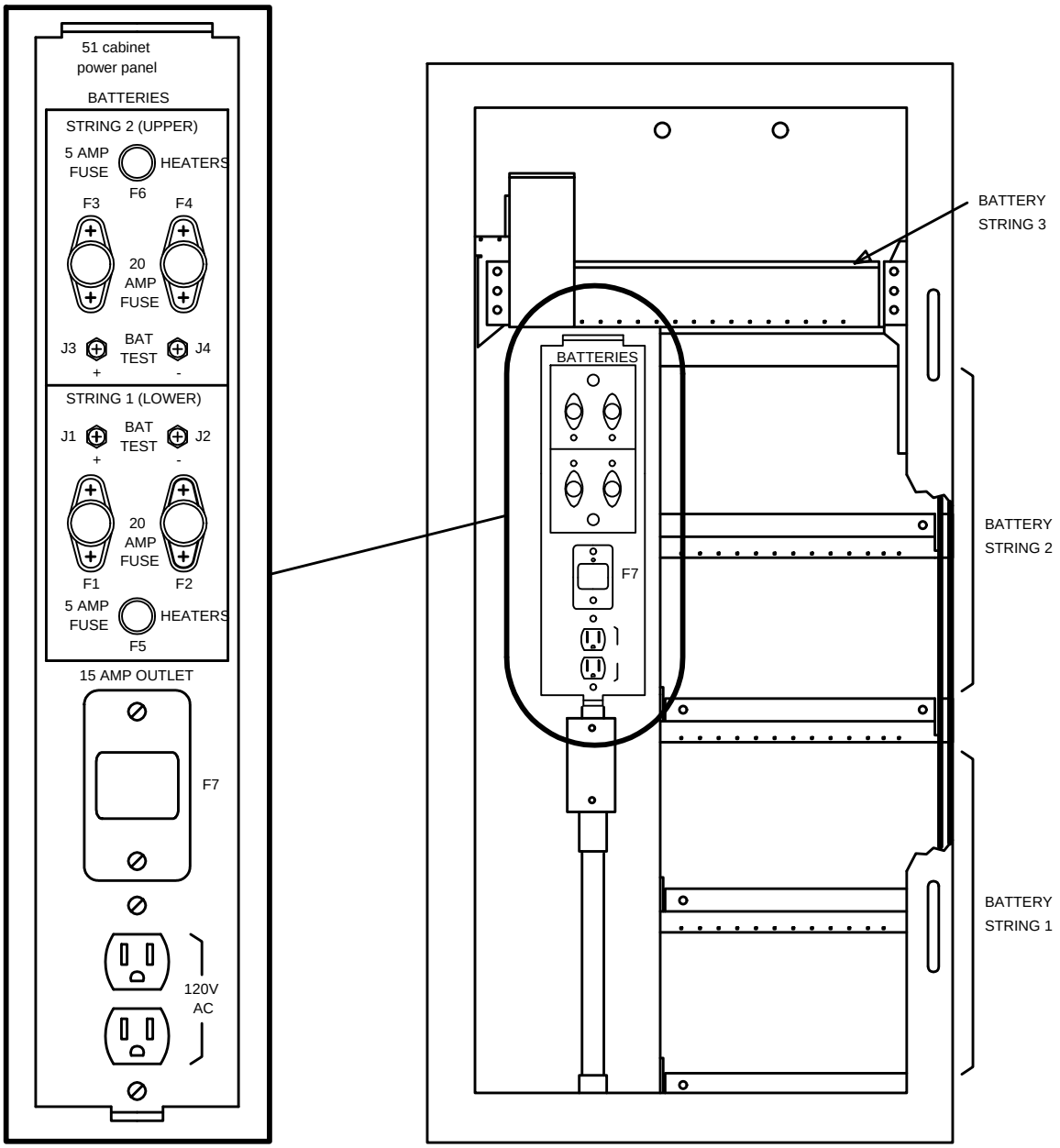


**Figure 1 – Battery Section of 51A Cabinet Showing Power Panel**

6.

**NOTE:**
The four plugs supplied to upper two battery shelves (battery string 2) are labeled **P5, P6, P7,** and **P8**.

Connect each battery lead jack to one of two plugs supplied to each shelf.

7. Get DMM and condition to measure DC volts.

8. In battery section of cabinet at power panel, refer to Table A and connect DMM test leads to **+BAT TEST** jack **J1** or **J3** and – **BAT TEST** jack **J2** or **J4** of battery string 2.

9. Does meter indicate greater than 45.0 volts DC?

   If **YES,** then proceed to Step **18.**
   If **NO,** then continue with Step **10.**

10. Check battery lead connections at battery shelf.

11. Does meter indicate greater than 45.0 volts DC?

    If **YES,** then proceed to Step **18.**
    If **NO,** then continue with Step **12.**

12.

**NOTE:**
If voltage requirements are not met after replacement battery pack is installed, original battery pack should be reinstalled in battery shelf.

Replace one of the battery packs in battery shelf.

13. In battery section of cabinet at power panel, refer to Table A and connect DMM test leads to **+BAT TEST** jack **J1** or **J3** and – **BAT TEST** jack **J2** or **J4** of battery string 2.

**Table A**

**51A Power Panel**

| Power Panel (Note) | Battery String | Associated Fuses | Associated Jacks | Connector Plug |
|---|---|---|---|---|
| Early Version | 1 (Lower) | F3, F4, F5 | J3, J4 | P5, P6, P7, P8 |
| | 2 (Upper) | F1, F2, F6 | J1, J2 | P1, P2, P3, P4 |
| Later Version | 1 (Lower) | F1, F2, F5 | J1, J2 | P1, P2, P3, P4 |
| | 2 (Upper) | F3, F4, F6 | J3, J4 | P5, P6, P7, P8 |

***Note:*** If the words **51 CABINET POWER PANEL** appear at the top of the power panel, then the power panel is a later version. Otherwise, the power panel is an early version.

14. Does meter indicate greater than 45.0 volts DC?

    If **YES,** then proceed to Step **18.**
    If **NO,** then continue with Step **15.**

15. Have all battery packs on shelf been replaced?

    If **YES,** then proceed to Step **17.**
    If **NO,** then continue with Step **16.**

16. Select another battery pack on battery shelf and repeat from Step **12.**

17. Check wiring and connectors on battery shelf. Repeat the procedure from Step **13** after locating and correcting trouble.

18. Remove DMM test leads and reinstall fuses in power panel that were removed previously.

19. Is battery string 3 to be installed?

    If **YES,** then continue with Step **20.**
    If **NO,** then proceed to Step **40.**

20.

**DANGER:**
*High current flow will occur if short is placed across battery terminals. No attempt should be made to measure battery voltage across terminals.*

Get four KS-21906, L4 battery packs.

21. Remove fuses, if present, from **+BAT** and –**BAT** fuse holders on battery shelf.

22. At front of battery shelf, remove front cover by lifting cover up and out (Figure 2).

23. Place batteries on battery shelf and dress battery cables as each battery pack is placed on shelf (Figure 3).

24.

**NOTE:**
Four battery jacks can be plugged into any four plugs on shelf, in any order.

Connect four battery lead jacks to four plugs (**P1**, **P2**, **P3**, and **P4**) on top of battery shelf.

25. Reinstall front cover on battery shelf.

26. Condition DMM to measure DC volts.

27. On battery shelf, connect DMM test leads to **+BAT** jack (**J5**) and –**BAT** jack (**J6**).

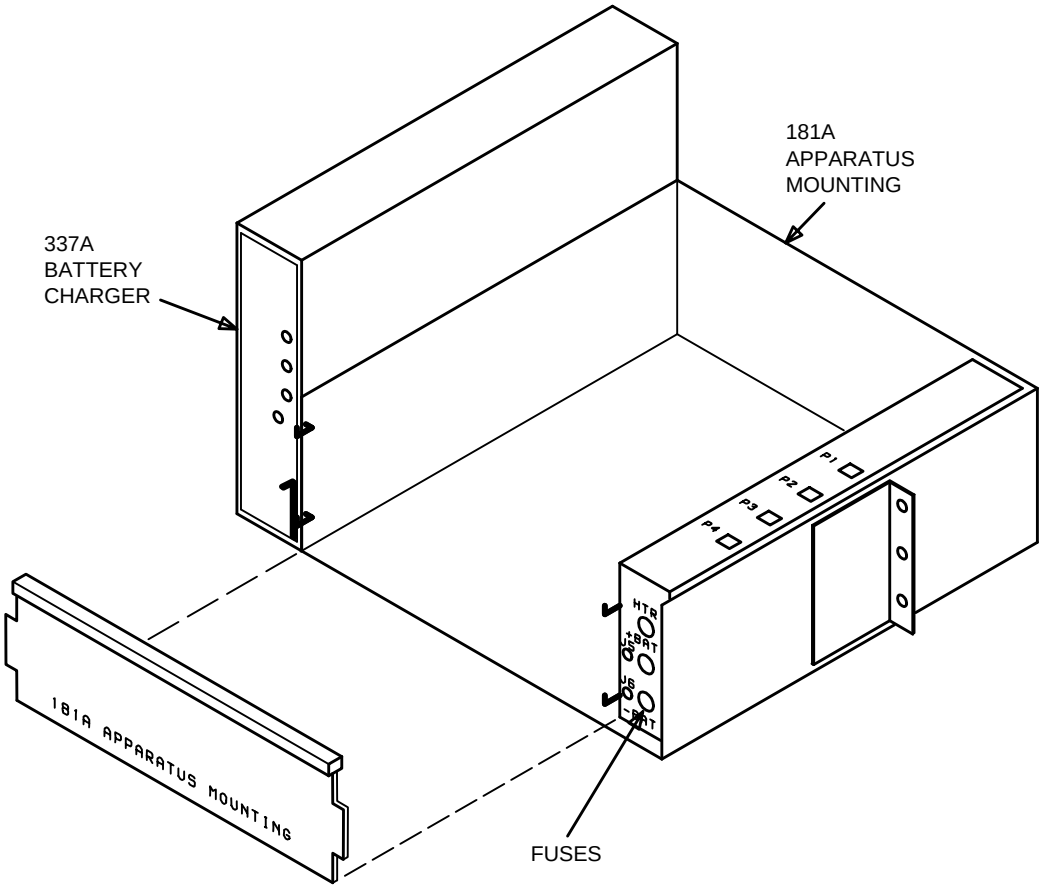


**Figure 2 – Battery Shelf**

28. Does meter indicate greater than 45.0 volts DC?

    If **YES,** then proceed to Step **37.**
    If **NO,** then continue with Step **29.**

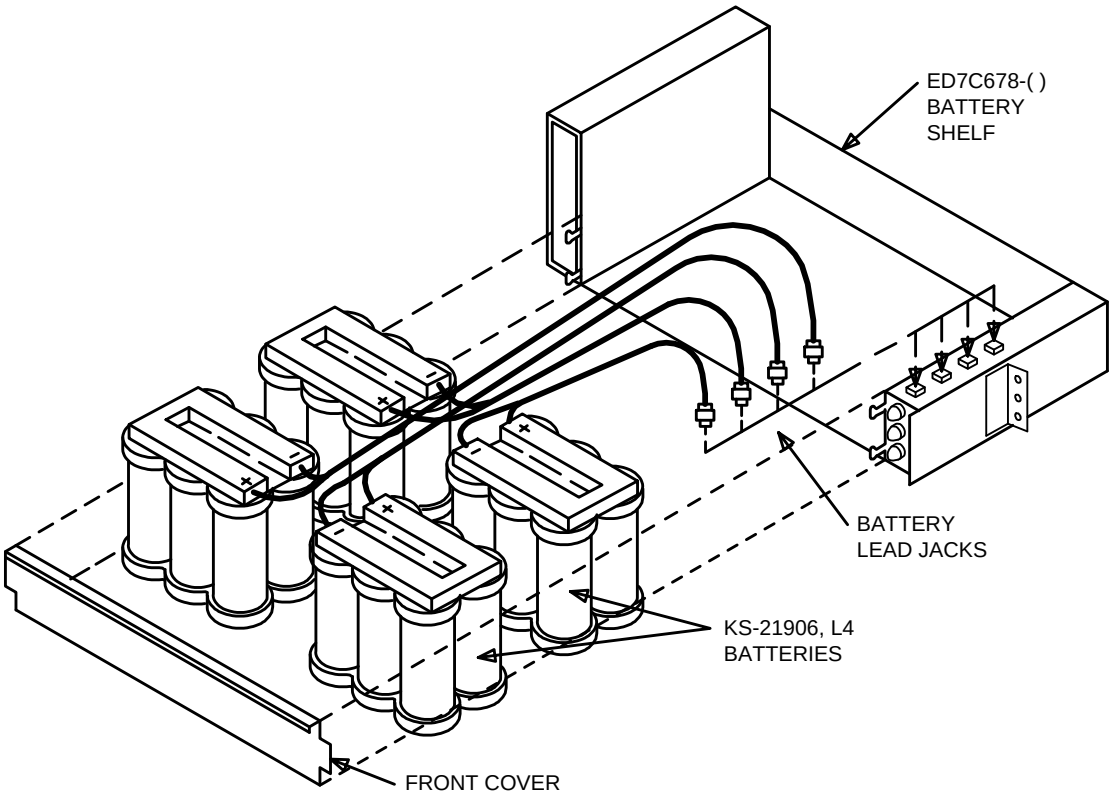


**Figure 3 – Battery Placement and Connections**

29. Check battery lead connections at battery shelf.

30. Does meter indicate greater than 45.0 volts DC?

    If **YES,** then proceed to Step **37.**
    If **NO,** then continue with Step **31.**

31.

    **NOTE:**
    If voltage requirements are not met after replacement battery pack is installed, original battery pack should be reinstalled in battery shelf.

    Replace one of the battery packs.

32. On battery shelf, connect DMM test leads to **+BAT** jack (**J5**) and –**BAT** jack (**J6**).

33. Does meter indicate greater than 45.0 volts DC?

    If **YES,** then proceed to Step **37.**
    If **NO,** then continue with Step **34.**

34. Have all battery packs been replaced?

    If **YES,** then continue with Step **35.**
    If **NO,** then proceed to Step **36.**

35. Check battery lead connections at battery shelf. Repeat procedure from Step **27** after locating and correcting trouble.

36. 

    **NOTE:**
    If voltage requirements are not met after replacement battery pack is installed, original battery pack should be reinstalled in battery shelf.

    Select another battery pack on battery shelf and repeat from Step **31.**

37. Remove DMM test leads.

38. Install good 25-Amp fuses (Buss ABC or equivalent) into **+BAT** and –**BAT** fuse holders on battery shelf.

39. Install good 5-Amp fuse into **HTR** fuse holder on battery shelf.

40. Insert connector **J113** into connector **P113** on battery shelf.

    **STOP. YOU HAVE COMPLETED THIS PROCEDURE.**

# Add 337A Battery Chargers to an Existing Frame-Type or 80-Type Cabinet RT Battery Shelf

1. Get one **337A BATTERY CHARGER** (Figure 1 ) and inspect it for possible damage.

2. Verify that fuses on **BATTERY CHARGER** are not blown (Figure 1).

3. Insert the **337A BATTERY CHARGER** into the slot located on the left side of the battery shelf (Figure 2) and press the **HIGH RATE CHG/ACTIVATE** button on the **BATTERY CHARGER**.

   Response: **BAT DISCHG** indicator on **337A BATTERY CHARGER** is lighted.

4. Are other **BATTERY CHARGER**s to be installed?

   If **YES,** then proceed to Step **1.**
   If **NO,** then **STOP. YOU HAVE COMPLETED THIS PROCEDURE.**

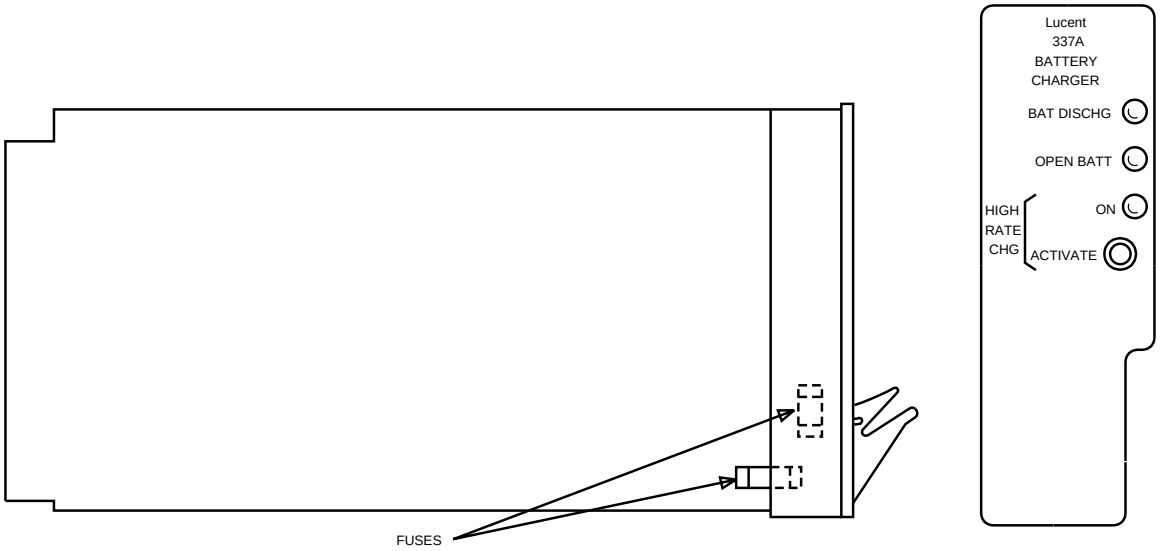


**Figure 1 – Location of Fuses on 337A BATTERY CHARGER**

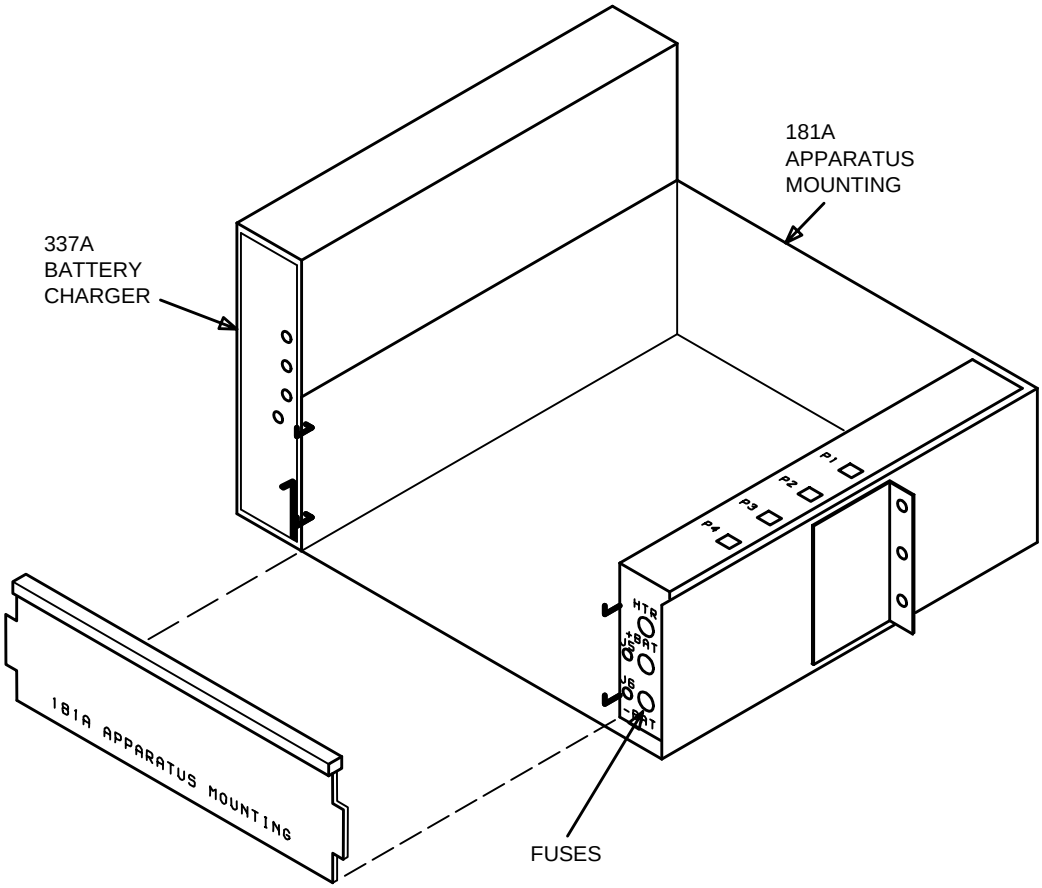


**Figure 2 – Battery Shelf**

# Add 336A Rectifiers to Existing J1C182BA Power Shelf

1. Get required number of **336A RECTIFIER**s and inspect for possible physical damage.

2. Verify that fuse on **336A RECTIFIER**(s) (Figure 1) is not blown.

3. Insert one **336A RECTIFIER** into first vacant **RECT** slot (counting right to left) in power shelf.

4. Is another **336A RECTIFIER** to be installed?

   If **YES,** then repeat from Step **2.**
   If **NO,** then **STOP. YOU HAVE COMPLETED THIS PROCEDURE.**

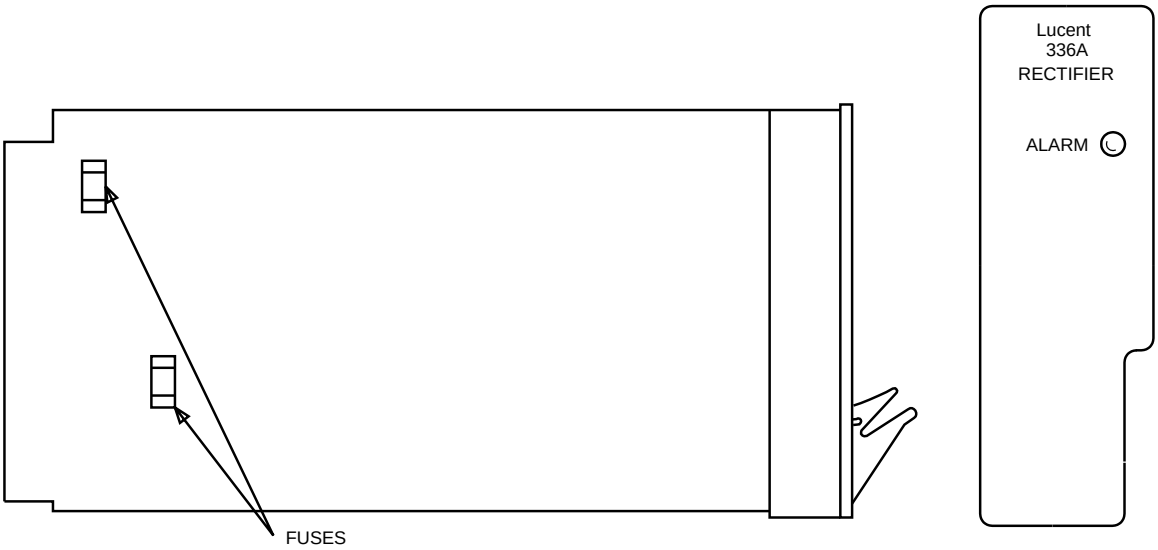


**Figure 1 – Location of Fuse on 336A RECTIFIER**

# Install Ringing Switch Unit (RSU) in J1C182BB Bulk Power Shelf

**SUMMARY:** Insert **RSU** into power shelf. Measure –42 to –56 V DC on **RSU** faceplate.

1. Get one **AUG2 RSU** (Figure 1) and inspect for possible physical damage.

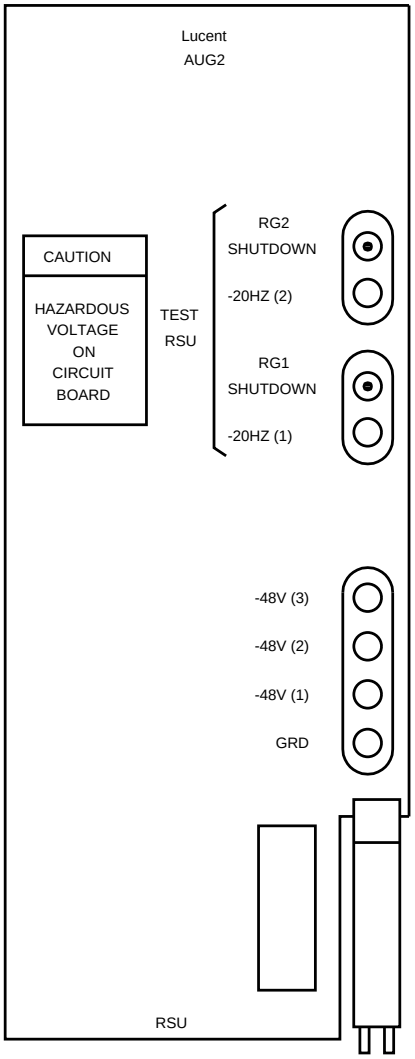


**Figure 1 – Ringing Switch Unit (AUG2) Faceplate**

2. Insert **RSU** into **RSU** slot in power shelf.

3. Get DMM and condition it to measure DC volts.

4. Connect DMM test leads to **GRD** jack and –**48V (1)** jack on **RSU**.

5. Is –42 to –56 volts present?

   If **YES,** then proceed to Step **14.**
   If **NO,** then continue with Step **6.**

6. Check –48V (1) feeder and –48V (1) RTN feeder connection from bulk power plant to power shelf.

7. Have feeders been properly connected?

   If **YES,** then proceed to Step **9.**
   If **NO,** then continue with Step **8.**

8. Refer trouble to installation group.

9. Replace **RSU**.

10. Connect DMM test leads to **GRD** jack and –**48V (1)** jack on **RSU**.

11. Is –42 to –56 volts present?

    If **YES,** then proceed to Step **14.**
    If **NO,** then continue with Step **12.**

12. Replace **RSU** with **RSU** removed previously.

13. Check wiring on rear of power shelf using SD-7C130-01. Repeat procedure from Step **4** after locating and correcting trouble.

14. Remove DMM test leads from **RSU**.

15. Repeat the procedure from Step **4** using –**48V (2)** jack on **RSU** and checking for –48V (2) and –48V (2) RTN feeders and proceed to Step **16.**

16. Repeat the procedure from Step **4** using –**48V (3)** jack on **RSU** and checking for –48V (3) and –48V (3) RTN feeders.

    **STOP. YOU HAVE COMPLETED THIS PROCEDURE.**

# Install 3C( ) Ringing Generators in J1C182BB Bulk Power Shelf

**SUMMARY:** Insert **3C( ) RINGING GENERATOR** into **RING GEN1** slot in power shelf. Measure 90 to 110 V AC and –50 to –60 V DC at **RSU** [–**20HZ (1)**, **(2)**/**GRD**]. Unseat **RING GEN1**, install **RING GEN2** and repeat. Reseat **RING GEN1** and press and hold **RG1 SHUTDOWN** button on **RSU**. Verify that **FAIL** indicator on **RING GEN1** is lighted and **FAIL** indicator on **RING GEN2** is off. Release **RG1 SHUTDOWN** button and press and hold **RG2 SHUTDOWN** button on **RSU**. Verify that **FAIL** indicator on **RING GEN1** is off and **FAIL** indicator on **RING GEN2** is lighted.

1. Get two **3C( ) RINGING GENERATOR**s and inspect for possible physical damage.

2. Insert one **3C( ) RINGING GENERATOR** into **RING GEN1** slot in power shelf.

3. Condition digital multimeter (DMM) to measure AC volts.

4. On **RSU**, connect DMM test leads to –**20HZ (1)** jack and **GRD** jack.

   Response: DMM indicates between 90 and 110 volts.

5. Condition DMM to measure DC volts.

   Response: DMM indicates between –50 and –60 volts.

6. Repeat Steps **3** through **5** with the DMM test leads connected to –**20HZ (2)** jack and **GRD** jack on **RSU**.

7. Is AC/DC ringing present at both –**20HZ** jacks on the **RSU**?

   If **YES,** then proceed to Step **24.**
   If **NO,** then continue with Step **8.**

8. Is AC/DC ringing present at one –**20HZ** jack on the **RSU**?

   If **YES,** then continue with Step **9.**
   If **NO,** then proceed to Step **12.**

9. Replace **RSU** and repeat Steps **3** through **6**.

10. Is AC/DC ringing present at both –**20HZ** jacks on the **RSU**?

    If **YES,** then proceed to Step **24.**
    If **NO,** then continue with Step **11.**

11. Check wiring at bulk power shelf using SD-7C130-01. Repeat procedure from Step **3** after locating and correcting trouble.

12. Is **FAIL** indicator on **RING GEN1** lighted?

    If **YES,** then continue with Step **13.**
    If **NO,** then proceed to Step **14.**

13. Replace **RING GEN1** and repeat the procedure from Step **3**.

14. Condition DMM to measure AC volts.

15. On **RING GEN1**, connect DMM test leads to –**20HZ** jack and **GND** jack.

    Response: DMM indicates between 90 and 110 volts.

16. Condition DMM to measure DC volts.

    Response: DMM indicates between –50 and –60 volts.

17. Is AC/DC ringing present on **RING GEN1**?

    If **YES,** then continue with Step **18.**
    If **NO,** then proceed to Step **19.**

18. Check wiring on bulk power shelf connecting to **RING GEN1** using SD-7C130-01. Repeat procedure from Step **3** after locating and correcting trouble.

19. Condition DMM to measure DC volts.

20. On **RING GEN1**, connect DMM test leads to –**48V** jack and **GND** jack.

21. Does DMM indicate between –42 and –56 volts?

    If **YES,** then continue with Step **22.**
    If **NO,** then proceed to Step **23.**

22. Replace **RING GEN1** and repeat the procedure from Step **3**.

23. Check wiring on bulk power shelf to **RING GEN1** using SD-7C130-01. Repeat procedure from Step **3** after locating and correcting trouble.

24. Have both **3C( ) RINGING GENERATOR**s been tested?

    If **YES,** then proceed to Step **27.**
    If **NO,** then continue with Step **25.**

25. Unseat **RING GEN1**.

26. Insert second **3C( ) RINGING GENERATOR** into **RING GEN2** slot in power shelf and repeat from Step **3.**

27. Reseat **RING GEN2** and press and hold **RG1 SHUTDOWN** button on **RSU**.

28. Is **FAIL** indicator on **RING GEN1** lighted and **FAIL** indicator on **RING GEN2** off?

    If **YES,** then proceed to Step **31.**
    If **NO,** then continue with Step **29.**

29. Release **RG1 SHUTDOWN** button and replace **RING GEN1**.

30. Unseat **RING GEN2** and repeat from Step **3.**

31. Release **RG1 SHUTDOWN** button.

32. Press and hold **RG2 SHUTDOWN** button on **RSU**.

33. Is **FAIL** indicator on **RING GEN1** off and **FAIL** indicator on **RING GEN2** lighted?

    If **YES,** then proceed to Step **36.**
    If **NO,** then continue with Step **34.**

34. Release **RG2 SHUTDOWN** button and replace **RING GEN2**.

35. Unseat **RING GEN1** and repeat from Step **3.**

36. Release **RG2 SHUTDOWN** button.

**STOP. YOU HAVE COMPLETED THIS PROCEDURE.**

# Install AUG1 Positive Ring Unit in J1C182BB Bulk Power Shelf

**SUMMARY:** Verify presence of correct fuses and insert **AUG1 PRU** into **PRU1** slot in bulk power shelf. Measure 90 to 110 V AC and –50 to –60 V DC at –**20HZ** jack, 90 to 110 V AC and 50 to 60 V DC at **+20HZ** jack, and –42 to –56 V DC at –**48V** jack. If second **PRU** is required, repeat procedure installing **PRU** into **PRU2** slot in bulk power shelf.

1. Get one **AUG1 PRU** (Figure 1) and inspect for possible physical damage.

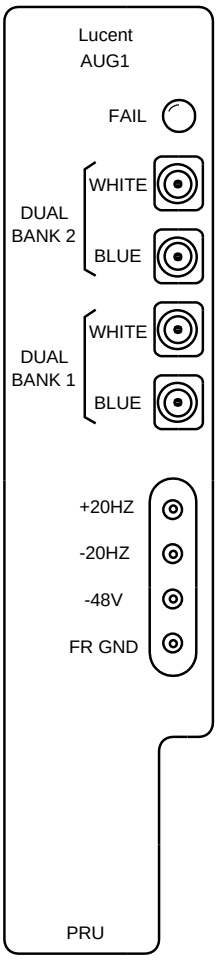


**Figure 1 – AUG1 Positive Ring Unit**

2. Verify that each fuse holder on faceplate of **PRU** contains an 80G (0.5A) fuse (red bead) and that fuses are not blown (fuse is blown when bead protrudes from hole in faceplate). If a fuse is blown, use **WECO 553A** Extractor Tool (Techni-Tool No. 594TE170) or **WECO 319B** (KS-6305) Extractor Tool (Techni-Tool No. 490PL020) to remove it.

3. Is a **PRU** present in **PRU1** slot in bulk power shelf?

   If **YES,** then proceed to Step **5.**
   If **NO,** then continue with Step **4.**

4. Insert **AUG1 PRU** into **PRU1** slot in bulk power shelf and proceed to Step **6**.

5. Insert **AUG1 PRU** into **PRU2** slot in bulk power shelf.

6. Do any fuses on **PRU** blow?

   If **YES,** then continue with Step **7.**
   If **NO,** then proceed to Step **12.**

7. Replace blown fuse(s) on **PRU** using **WECO 553A** Extractor Tool (Techni-Tool No. 594TE170) or **WECO 319B** (KS-6305) Extractor Tool (Techni-Tool No. 490PL020).

8. Do any fuses on **PRU** blow?

   If **YES,** then continue with Step **9.**
   If **NO,** then proceed to Step **12.**

9. Check wiring using SD-7C119-01.

10. Is wiring correct?

    If **YES,** then get another **PRU** and proceed to Step **2.**
    If **NO,** then continue with Step **11.**

11. Repair wiring and replace blown fuses in **PRU**.

12. Condition digital multimeter (DMM) to measure DC volts.

13. On **PRU**, connect DMM test leads to –**48** jack and **FR GND** jack.

14. Does DMM indicate between –42 and –56 volts?

    If **YES,** then proceed to Step **16.**
    If **NO,** then continue with Step **15.**

15. Check wiring on power shelf between **336A RECTIFIER** and **PRU** using SD-7C119-01. Repeat procedure from Step **13** after locating and correcting trouble.

16. On **PRU**, connect DMM test leads to –**20HZ** jack and **FR GND** jack.

    Response: DMM indicates between –50 and –60 volts.

17. Leave DMM test leads connected to –**20HZ** and **FR GND** jacks and condition DMM to measure AC volts.

    Response: DMM indicates between 90 and 110 volts.

18. Is AC/DC ringing voltages present at –**20HZ** jack on the **PRU**?

    If **YES,** then proceed to Step **20.**
    If **NO,** then continue with Step **19.**

19. Check wiring on power shelf between **3C( ) RINGING GENERATOR** and **PRU** using SD-7C119-01. Repeat procedure from Step **16** after locating and correcting trouble.

20. Condition DMM to measure DC volts.

21. On **PRU**, connect DMM test leads to **+20HZ** jack and **FR GND** jack.

    Response: DMM indicates between 50 and 60 volts.

22. Leave DMM test leads connected to **+20HZ** and **FR GND** jacks and condition DMM to measure AC volts.

    Response: DMM indicates between 90 and 110 volts.

23. Is AC/DC ringing voltages present at **+20HZ** jack on the **PRU**?

    If **YES,** then proceed to Step **25**.
    If **NO,** then continue with Step **24.**

24. Replace **PRU** and repeat procedure from Step **2**.

25. Is another **PRU** to be installed at this time?

    If **YES,** then proceed to Step **1**.
    If **NO,** then **STOP. YOU HAVE COMPLETED THIS PROCEDURE.**

# Install 336A Rectifiers in J1C182BD Power Shelf

**SUMMARY:** Insert **336A RECTIFIER** into power shelf. Measure –54 to –55 V DC between **- (1A/mV)** and **+ (VOLTAGE)** on the power shelf (bottom 2 jacks). Unseat **336A RECTIFIER** and repeat for additional **336A RECTIFIER**s. Reseat all **336A RECTIFIER**s.

1.

   **NOTE:**
   Three **336A RECTIFIER**s are suggested for one string of batteries and an additional two **336A RECTIFIER**s (total of five) are required for a second string of batteries.

   Get required number of **336A RECTIFIER**s and inspect for possible physical damage.

2. All **BATTERY CHARGER**s must be unseated throughout this procedure.

   Verify that fuse on **336A RECTIFIER**s (Figure 1) is not blown.

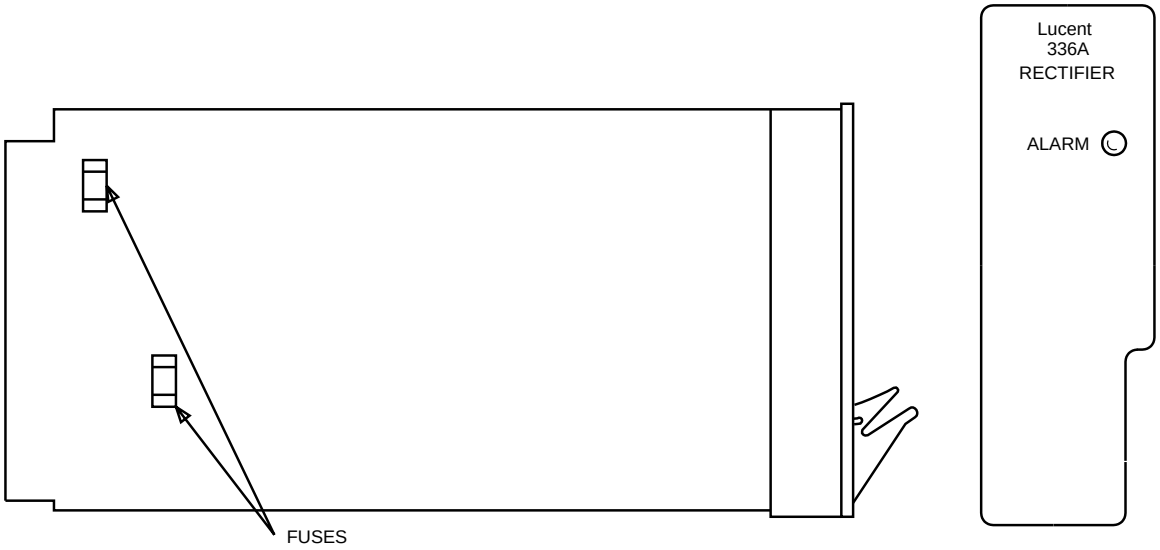


**Figure 1 – Location of Fuse on 336A RECTIFIER**

3. Insert one **336A RECTIFIER** into first vacant **RECT** slot (counting left to right ) in power shelf (Figure 2).

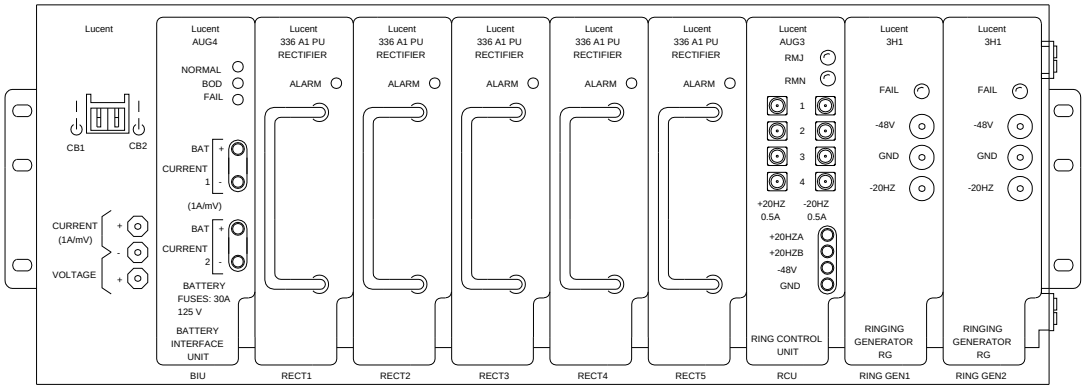


**Figure 2 – J1C182BD Power Shelf**

4. Condition DMM to measure DC volts.

5. Connect DMM test leads to **- (1A/mV)** and **+ (VOLTAGE)** on the power shelf (bottom 2 jacks).

6. Does DMM indicate between –54 and –55 volts?

   If **YES,** then proceed to Step **12.**
   If **NO,** then continue with Step **7.**

7. Condition DMM to measure AC volts.

8. Operate AC power circuit breaker off and then back on.

9. Verify AC power is connected to **P112** on the side of the power shelf. Check for presence of 105 to 129 volts AC at TB1 rear of power shelf (pin3 neutral; pin1 θ1 RECTs 1, 2, 3; pin4 θ2 RECTs 4 and 5).

10. Is correct voltage present?

    If **YES,** then proceed to Step **11.**
    If **NO,** then **refer trouble to installation group.**

11. Check wiring on power shelf using SD-7C163-01. Repeat procedure from Step **4** after trouble is found and corrected.

12. Is another **336A RECTIFIER** to be installed?

    If **YES,** then continue with Step **13.**
    If **NO,** then proceed to Step **15.**

13. Unseat **336A RECTIFIER**(s) installed previously.

14. Get another **336A RECTIFIER** and repeat from Step **2.**

15. Remove DMM test leads and reseat all **336A RECTIFIER**s.

    **STOP. YOU HAVE COMPLETED THIS PROCEDURE.**

# Install Ring Control Unit (RCU) in J1C182BD Power Shelf

**SUMMARY:** Install **RCU** into power shelf. Verify no fuses blown and no indicators lighted on **RCU**. Measure voltage at –**48V** and **GND**. Requirement: –43 to –56 V DC. Measure voltage at **+20HZA** and **GND**. Requirement: 50 to 60 V DC and 90 to 110 V AC. Measure voltage at **+20HZB** and **GND**. Requirement: 50 to 60 V DC and 90 to 110 V AC.

1. Get one **AUG3 RCU** [Figure 1] and inspect for possible physical damage.

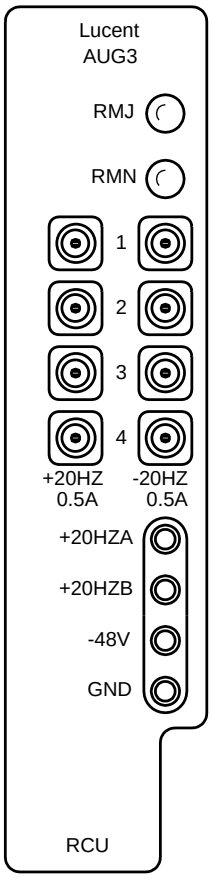


**Figure 1 – Ring Control Unit (AUG3) Faceplate**

2. Verify that each fuse holder on **RCU** faceplate contains an 80G (0.5A) fuse and that no fuses are blown. (Fuse bead will pop out when fuse is blown.)

3. Are any fuses blown?

   If **YES,** then continue with Step **4.**
   If **NO,** then proceed to Step **6.**

4. Use 553A extractor tool (COMCODE 997991575) (Techni-tool No. 594TE170) or 319B (KS-6305) extractor tool (COMCODE 100753904) (Techni-tool No. 490PL020) to remove blown fuses.

5. Install good 80G (0.5A) fuse in each empty fuse holder.

6. Install **RCU** into **RCU** slot in power shelf.

7. Do any fuses blow on **RCU**?

   If **YES,** then continue with Step **8.**
   If **NO,** then proceed to Step **14.**

8. Replace **RCU**. Do any fuses blow on **RCU**?

   If **YES,** then continue with Step **9.**
   If **NO,** then proceed to Step **14.**

9. On power shelf on right-hand side, disconnect P140 output connector, then replace blown fuses on **RCU**.

10. Do any fuses blow on **RCU**?

    If **YES,** then proceed to Step **12.**
    If **NO,** then continue with Step **11.**

11. Refer to SD-7C158-01 to check connectors on 80A bulk-power cabinet and correct wiring problem. Repeat from Step **7.**

12. Use SD-7C163-01 to correct wiring problem in power shelf.

13. Reconnect J140 connectors and replace blown fuses on **RCU**. Repeat from Step **7.**

14. Is any indicator lighted on **RCU**?

    If **YES,** then continue with Step **15.**
    If **NO,** then proceed to Step **16.**

15. Replace **RCU** and repeat from Step **7.**

16. Get DMM and condition it to measure DC volts.

17. Connect DMM test leads to –**48V** jack and **GND** jack on **RCU**.

18. Does meter indicate –43 to –56 volts?

    If **YES,** then proceed to Step **20.**
    If **NO,** then continue with Step **19.**

19. Replace **RCU** and repeat from Step **7.**

20. On **RCU** at **+20HZA** jack and **GND** jack [Figure 1], measure DC positive ringing.

    Requirement: Meter indicates between 50 and 60 volts

21. Condition DMM to measure AC volts. Measure AC positive ringing at same jacks (**+20HZA** and **GND**).

    Requirement: Meter indicates between 90 and 110 volts.

22. Did meter indicate as required in Step **20** and Step **21**?

    If **YES,** then proceed to Step **24.**
    If **NO,** then continue with Step **23.**

23. Replace **RCU** and repeat from Step **7.**

24. Have both **+20HZA** and **+20HZB** jacks been tested?

    If **YES,** then **STOP. YOU HAVE COMPLETED THIS PROCEDURE**
    If **NO,** then continue with Step **25.**

25. Condition DMM to measure DC volts and repeat from Step **20** for **+20HZB** jack.

# Install 3H1 Ringing Generators in J1C182BD Power Shelf

**SUMMARY:** Insert **3H1 RINGING GENERATOR** into **RING GEN1** slot in power shelf. Measure 90 to 110 V AC and –50 to –60 V DC at [–**20HZ (1)**, **GRD**]. Unseat **RING GEN1**, install **RING GEN2** and repeat. Reseat **RING GEN1**. Verify no **-20HZ RCU** fuses blow.

1. Get two **3H1 RINGING GENERATOR**s and inspect for possible physical damage.

2. Insert one **3H1 RINGING GENERATOR** into **RING GEN1** slot in power shelf.

3. Is **FAIL** indicator on **RING GEN1** lighted?

   If **YES,** then continue with Step **4.**
   If **NO,** then proceed to Step **5.**

4. Replace **RING GEN1** and repeat the procedure from Step **3**. If replacement **FAIL** indicator lights, proceed to Step **9**.

5. Condition DMM to measure AC volts.

6. On **RING GEN1**, connect DMM test leads to –**20HZ** jack and **GND** jack.

   Response: DMM indicates between 90 and 110 volts.

7. Condition DMM to measure DC volts.

   Response: DMM indicates between –50 and –60 volts.

8. Is AC/DC ringing present on **RING GEN1**?

   If **NO,** then continue with Step **9.**
   If **YES,** then proceed to Step **10.**

9. Check wiring on power shelf connecting to **RING GEN1** using SD-7C163-01. Repeat procedure from Step **3** after locating and correcting trouble.

10. Condition DMM to measure DC volts.

11. On **RING GEN1**, connect DMM test leads to –**48V** jack and **GND** jack.

12. Does DMM indicate between –42 and –56 volts?

    If **NO,** then continue with Step **13.**
    If **YES,** then proceed to Step **14.**

13. Replace **RING GEN1** and repeat the procedure from Step **3**. If replacement **RING GEN1** –**48V** voltage requirements are not met, proceed to Step **9**.

14. Did any –**20HZ** fuses blow on **RCU**?

    If **YES,** then continue with Step **15.**
    If **NO,** then proceed to Step **16.**

15. Replace **RCU** –**20HZ** fuse. If replacement fuse blows, replace **RCU**

    Reference: DLP-520

16. Have both **3H1 RINGING GENERATOR**s been tested?

    If **YES,** then proceed to Step **19.**
    If **NO,** then continue with Step **17.**

17. Unseat **RING GEN1**.

18. Insert second **3H1 RINGING GENERATOR** into **RING GEN2** slot in power shelf and repeat from Step **3.**

19. Reseat **RING GEN1**.

**STOP. YOU HAVE COMPLETED THIS PROCEDURE.**

# Install Chloride Batteries in 80A Cabinet Battery Compartment

**SUMMARY:** Inspect *Chloride* 3VB11 batteries for damage. Measure battery voltage (Requirement: minimum 6.2 V DC). Remove covers and connect cable assemblies to batteries. Replace covers. Put batteries in position and connect batteries together. Connect battery string cable to batteries **1** and **8**. Check battery string voltage (requirement: minimum 49.5 V DC). Connect cable form battery string to power shelf. Repeat for second battery string to be installed.

1.

**DANGER:**
*Batteries are electrically live at all times and are capable of supplying high short circuit currents. Each battery comes with a plastic cover. Do not remove the cover until access to the terminals is required.*

**CAUTION:**
*Batteries should be handled carefully; the plastic container can be damaged if dropped. Never lift batteries by holding terminal posts.*

Get eight *Chloride* 3VB11 (COMCODE 405890336) batteries [Figure 1] and hardware (but discard connecting straps). Get cable assemblies (shipped with cabinet as Group 62) for connecting batteries:

8 — *Chloride* battery cable assemblies (COMCODE 846279149) [includes positive battery cable **BAT (+),** negative battery cable **BAT (–),** and cable separator]

1 — patch cord **JMP(+)/JMP(–)** (COMCODE 846279107)

1 — battery string cable **STR1/BAT1(+)/BAT8(–)** (COMCODE 846279115).

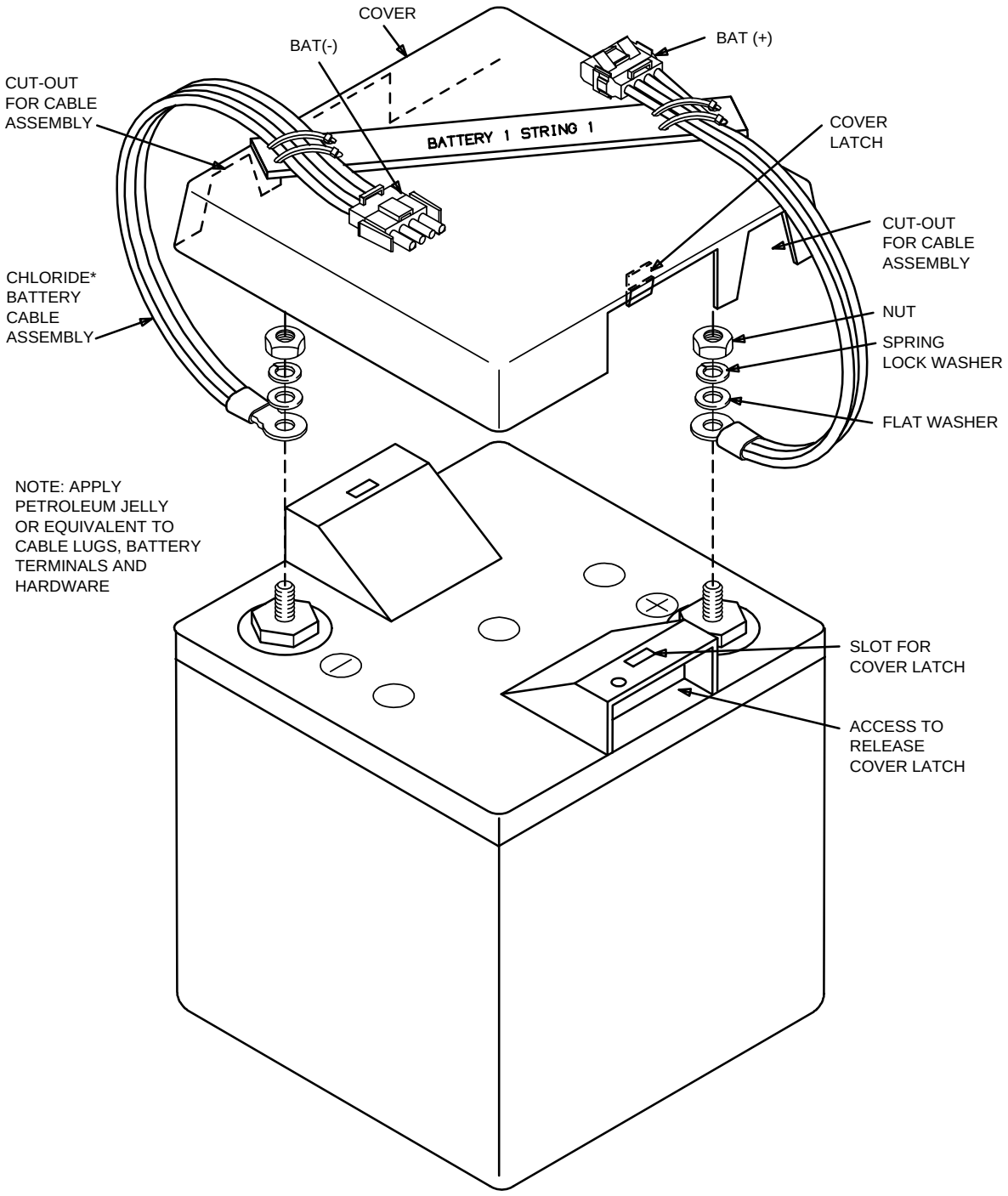


**Figure 1 – Detail of Chloride Batteries and Cable Assembly**

2. Visually inspect batteries for cracks, leakage, or other damage. Inspect cable assemblies for damage. Replace batteries or cables that appear damaged or defective.

3. Condition DMM to measure DC volts.

4. Measure terminal voltage of each battery. Does meter indicate 6.2 V DC or higher for each battery?

   If **YES,** then proceed to Step **6.**
   If **NO,** then continue with Step **5.**

5. Replace any battery that measures less than 6.2 V DC.

6. ⚠ **DANGER:**
   *Insulated tools must be used, and any rings, watches, bracelets, etc. must be removed when working on batteries.*

   ⚠ **CAUTION:**
   *Do not loosen large hexagonal nut at bottom of each terminal. Doing so will release terminal seal and may cause permanent damage to battery.*

   ⚠ **CAUTION:**
   *Battery covers have 2 latches, one on each side (in the handle) of the battery, accessed through battery handle opening. These latches must be depressed to remove cover, otherwise latches will break.*

   Remove battery covers and retain for fitting after battery cables are terminated. With permanent marker, mark each cable separator label with battery string identification.

7. Wipe battery terminals until clean and dry.

8.

**CAUTION:**
*For proper connection, make sure flat side of cable lug is installed **first** on battery post!*

On cable assembly [Figure 1], connect **BAT (+)** cable to **+** (positive) terminal of battery by installing cable lug, flat washer, spring lock washer, and nut on battery post. **Use only open-end wrench supplied with battery to tighten nut** (which prevents over-tightening). If no wrench is supplied, torque wrench may be used to tighten nut (8mm) to recommended fastening torque value of 4 ft-lbs (48 in-lbs). Do not overtighten.

9. On cable assembly [Figure 1], connect **BAT (–)** cable to – (negative) terminal of battery by installing cable lug, plain washer, spring lock washer, and nut on battery post. **Use only open-end wrench supplied with battery to tighten nut** (which prevents over-tightening). If no wrench is supplied, torque wrench may be used to tighten nut (8mm) to recommended fastening torque value of 4 ft-lbs (48 in-lbs). Do not overtighten.

10. Double check connections to make sure they are correct.

11. Apply petroleum jelly or equivalent on terminal connections as needed to prevent corrosion.

12. Install plastic cover (removed in Step **6**) on battery. Remove cut-outs in side wall of cover [Figure 1] as needed to fit over cable assembly.

13. Repeat from Step **7** for remaining batteries in battery string.

14. Use special key (modified hex key) and 216-tool to open doors to battery compartment (in cabinet skirt).

15.

**NOTE:**
Connectors are "keyed" and must be properly oriented to be connected.

Connect patch cord [Figure 2] to **BAT (–)** connector of battery **5**.

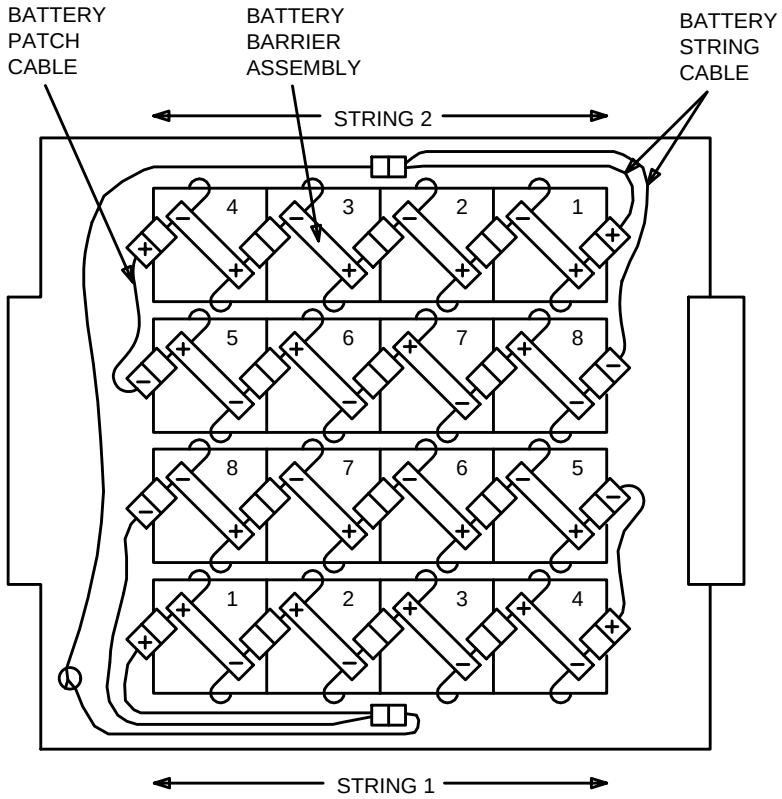


**Figure 2 – Chloride Battery String Connections and Position in 80A Cabinet**

16. As shown in Figure 2, place batteries **5** through **8** (with cable assemblies) in battery compartment in position for battery string 1 or 2.

17.

**DANGER:**
*When connecting batteries together, be careful **not** to connect together the positive and negative terminals of the **same** battery.*

Connect batteries together by plugging **BAT (–)** connector from one battery into **BAT (+)** connector from next battery [Figure 2].

18. Place batteries **1** through **4** in positions shown in Figure 2.

19. Connect other end of patch cord [Figure 2] to **BAT (+)** connector of battery **4**.

20. ⚠ **DANGER:**
    *When connecting batteries together, be careful **not** to connect together the positive and negative terminals of the **same** battery.*

    Connect batteries together by plugging **BAT (–)** connector from one battery into **BAT (+)** connector from next battery [Figure 2]. Repeat for remaining batteries in battery string.

21. Connect battery string cable to battery string: plug **BAT1 (+)** (female) connector to **BAT (+)** connector from battery **1** and **BAT8 (–)** (male) connector to **BAT (–)** connector from battery **8**.

22. Condition DMM to measure DC volts. Measure battery string voltage at gray **STR( )** connector (across clips) of battery string cable.

23. Does meter indicate battery string voltage of 49.5 V DC (absolute) or higher?

    If **YES,** then proceed to Step **25.**
    If **NO,** then continue with Step **24.**

24. Recheck battery connections for proper (positive to negative) sequence. Correct if necessary. If connections are correct, check individual battery voltage (can be measured through cover). Any battery that indicates less than 6.2 V DC should be replaced. If all batteries indicate less than 6.2 V DC, refresher charge may be necessary. Refer to manufacturer's instructions for refresher charge operation.

25. Connect together gray connectors on **STR( )** (1 or 2) battery string cable and **STR( )** (1 or 2) cable from the power shelf. Verify battery cable **J140** is plugged in **P140** on the side of the power shelf.

26. Dress and secure cables to the top of the battery compartment as necessary to keep them above batteries (in case of flood).

27.

**NOTE:**
To measure battery string voltage accurately, disconnect any battery strings other than battery string being measured. [To disconnect other battery strings, unplug **STR( )** battery string cable connector (gray) from **STR( )** battery cable connector (gray) from power shelf.]

On power shelf connect DMM to **(1A/mV) -** and **VOLTAGE +** (bottom 2 jacks). Turn AC circuit breaker off.

28. Does meter indicate battery string voltage of 49.5 V DC or higher?

    If **YES,** then proceed to Step **30.**
    If **NO,** then continue with Step **29.**

29. Check the four 30 Amp fuses on the **AUG4 BIU**. Visually inspect cable assembly between power shelf and battery string. Replace cable assembly fuse and/or cable assembly and **AUG4 BIU** until meter indicates correct voltage.

30. Is this the last battery string to be installed?

    If **YES,** then proceed to Step **31.**
    If **NO,** then repeat from Step **1** for next battery string.

31. Reconnect any battery strings disconnected for battery string voltage measurement. Turn AC circuit breaker on. Close and secure doors to battery compartment.

    Comment: Battery current can be measured on the **AUG4 BIU** by measuring millivolts DC between **+** and **-** for battery string 1 or 2. One millivolt DC corresponds to 1 AMP DC. A positive reading (+ to - with the common meter lead in **-**) indicates the batteries are being charged.

**STOP. YOU HAVE COMPLETED THIS PROCEDURE.**

# Install Lineage 2000 VR Series Batteries in 80A Cabinet Battery Compartment

**SUMMARY:** Unpack and visually inspect the batteries for damage. Measure the voltage of each battery. Requirement: 4.20 V DC or higher. Place batteries in the battery compartment (Figure 1). Coat inter-battery bus bars with NO-OXid grease. Connect the batteries together with the bus bar as shown in Figure 2. Connect battery string cable to batteries 1 and 12. Check the battery string voltage, note polarity and voltage (Requirement: minimum 50.4 V DC). Connect cable from power shelf to battery string cable. Repeat for second battery string to be installed.

1.

**DANGER:**
*Batteries are electrically live at all times and are able to supply several thousand amperes short circuit current. Great care should be exercised to avoid short circuiting the battery terminals. Insulated tools must be used; any rings, watches, bracelets, etc. must be removed when working on batteries.*

**DANGER:**
*Any contact of electrolyte with skin or clothing should be avoided. If contact occurs, the electrolyte can be neutralized by flushing with plenty of water. If electrolyte enters the eye, immediately flush the eye with water and seek medical help. If the batteries appear damaged in shipping, protective rubber apron, rubber gloves and goggles should be worn by persons handling the batteries.*

**CAUTION:**
*The Lineage 2000 VR Series battery is valve regulated, starved electrolyte lead acid cell. Should the case crack, it is possible that small amount of electrolyte (one ounce) could leak out. The electrolyte is sulfuric acid and should be handled as highly corrosive material. No battery installation should be attempted unless the installer has ready access to several gallons of water and a package of baking soda. Baking soda or solution of baking soda and water may be used to neutralize small amounts of electrolyte.*

Advance Printing

2. Get equipment for installation:
   - (1) ED-83242-30, G3 which consists of 12 Lineage 2000 VR series batteries, 11 inter-battery bus bars, 24 1/4-inch lock washers, 24 1/4-inch nuts, a container of the NO-OXid grease and a form 1285 (all these items are supplied with the batteries).
   - (1) battery string cable (comcode 846278224, one for each battery string) (shipped with the cabinet as Group 63).
   - torque wrench (range between 30 inch lb. and 200 inch lb.) with insulated handle (or insulate the handle with electrical tape).
   - 7/16-inch socket (for the 1/4-20 nut).
3. Unpack the batteries and inspect for physical damage. Do not install any cell that appears to be damaged. Any cell that has leaked electrolyte should be considered defective.
4. Condition DMM to measure DC volts.
5. Measure the terminal voltage of each battery. Does meter indicate 4.20 V DC or higher for each battery?

   If **YES**, then proceed to Step **6.**
   If **NO**, then continue with Step **5.**
6. Replace any battery that measures less than 4.20 V DC.
7. Wipe battery terminals until clean and dry.
8. Use special hex key (modified hex key) and 216-tool to open the battery compartment doors.

Advance Printing

9. Place all twelve batteries in the battery compartment as shown in Figure 1.

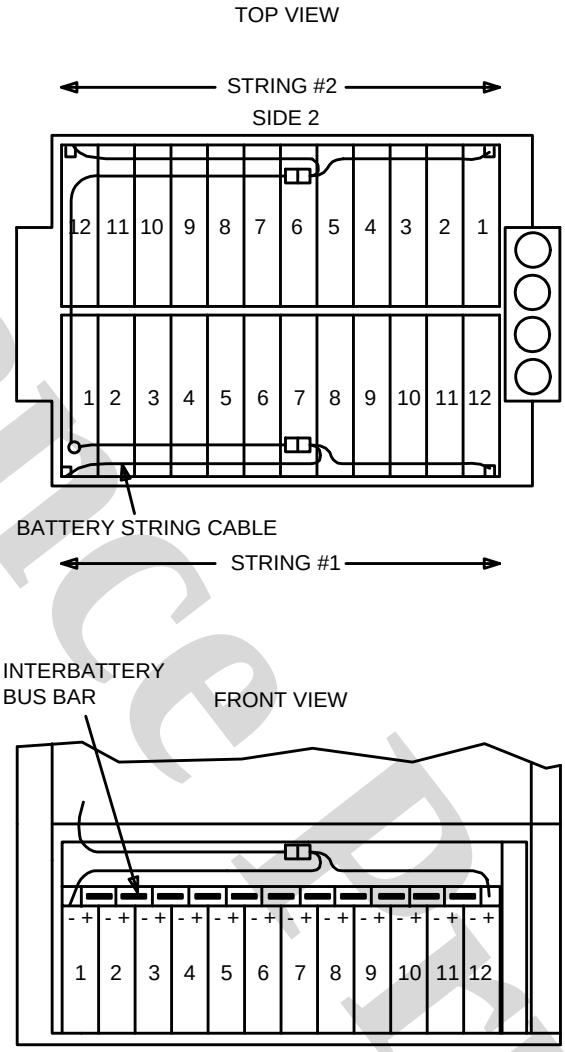


**Figure 1 – Layout of Lineage 2000 VR Series batteries in 80A cabinet**

Advance Printing

10. Coat inter-battery bus bars with NO-OXid grease and install on the batteries as shown in Figure 2. Install 1/4 inch lock washer and nut on battery post. Using insulated torque wrench with the socket, tighten nut to 55 in-lbs torque. Repeat for each battery post until all 12 batteries are connected together.

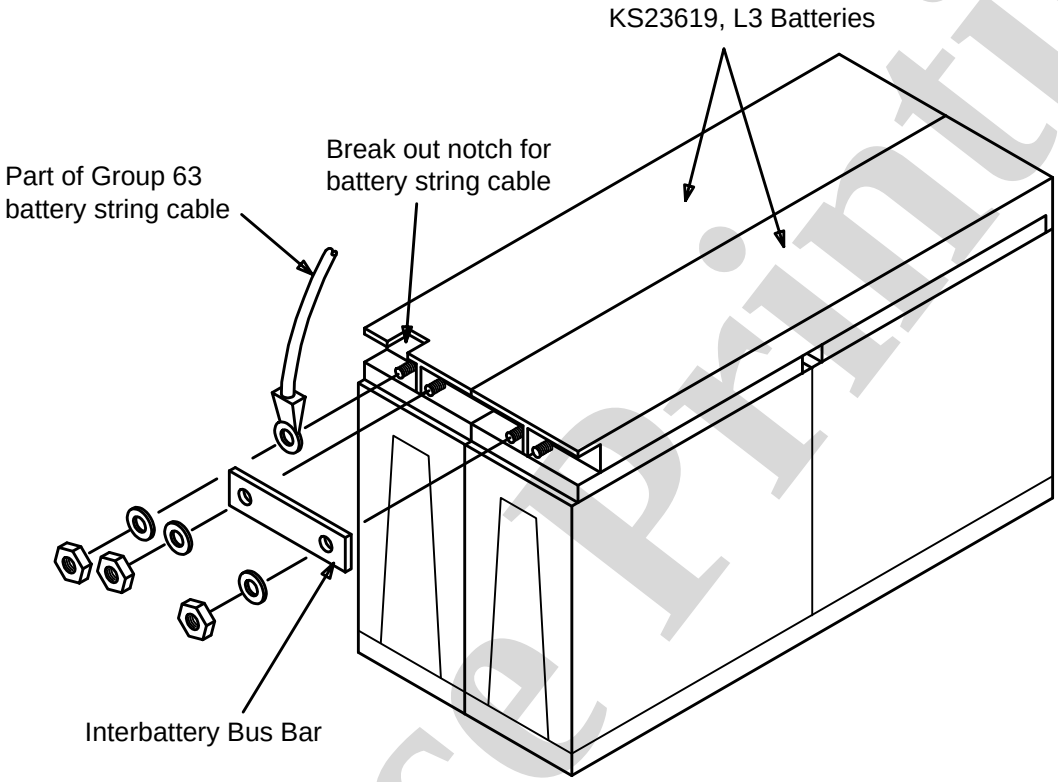


**Figure 2 – Battery string connections for Lineage 2000 VR Series batteries**

11. Cut a notch in the cover of the battery No. 1 (above "–" battery post) and battery No. 12 (above "**+**" battery post) (see Figure 2). This is required to install the battery string cable.

12. Connect the battery string cable to battery No. 1 by terminating the lug marked **BAT 1 (–)** to the "–" (negative) battery post of the first battery in the string (Figure 2). Connect the battery string cable to battery No. 12 by terminating the lug marked **BAT 12 (+)** to the "**+**" (positive) battery post of the 12th battery as shown in Figure 2. Install the lock washer and nut on the battery posts. Use insulated torque wrench to tighten the nuts to 55 in-lbs torque.

Advance Printing

13. Coat each battery connection with NO-OXid grease.

14. Condition DMM to measure DC volts. Measure battery string voltage at the connector (marked **STR** "**+**" and "–") at the end of the battery string cable. Make sure measured polarity corresponds with polarity indicated on connector.

15. Does meter indicate battery string voltage –50.4 V DC or higher?

    If **YES**, then proceed to Step **16.**
    If **NO**, then continue with Step **15.**

16. Make sure that there are twelve batteries in the string. Recheck battery connections and correct if necessary. If connections are correct, check individual battery voltage. Any battery that indicates less than 4.20 V DC should be replaced.

17. Connect the battery string cable **STR** connector to the connector designated **STR( )** (1 or 2) on the end of the battery cable located in the battery compartment. Verify battery cable **J140** is plugged in **P140** on the side of the power shelf.

18. Dress cables in the battery compartment.

19. 

    **NOTE:**
    To measure the battery string voltage accurately, disconnect any battery strings other than battery string being measured. [To disconnect other battery strings, unplug the battery string cable connector marked STR from the battery cable connector marked STR( ).]

    On power shelf connect DMM to **(1A/mV) -** and **VOLTAGE +** (bottom 2 jacks). Turn AC circuit breaker off.

20. Does meter indicate battery string voltage of 50.4 V DC or higher?

    If **YES**, then proceed to Step **21.**
    If **NO**, then continue with Step **20.**

21. Check the four 30 Amp fuses on the **AUG4 BIU**. Visually inspect cable assembly between power shelf and battery string. Replace cable assembly fuse and/or cable assembly and **AUG4 BIU** until meter indicates correct voltage.

22. Is this the last battery string to be installed?

    If **YES**, then proceed to Step **22.**
    If **NO**, then repeat from Step **1** for next battery string to be installed.

Advance Printing

23. Disconnect test equipment. Reconnect any battery strings disconnected for voltage measurement. Turn AC breaker on. Close and lock battery compartment door.

    Comment: Battery current can be measured on the **AUG4 BIU** by measuring millivolts DC between **+** and **-** for battery string 1 or 2. One millivolt DC corresponds to 1 AMP DC. A positive reading (+ to - with the common meter lead in **-**) indicates the batteries are being charged.

24. Between one and three hours after the rectifiers are installed, measure the voltage of each battery in the string and record on form 1285 supplied with the batteries. Meter should indicate between 4.44 V DC and 4.64 V DC for each battery. Any battery outside this limit should be measured again within one week. If it is still outside the limit, replace battery.

    **STOP. YOU HAVE COMPLETED THIS PROCEDURE.**

Advance Printing

# Install *Chloride* Batteries in 80E Cabinet Battery Compartment

**SUMMARY:** Inspect *Chloride* 3VB11 batteries for damage. Measure battery voltage (Requirement: minimum 6.2 V DC). Remove covers and connect cable assemblies to batteries. Replace covers. Put batteries in position and connect batteries together. Connect battery string cable to batteries **1** and **8**. Check battery string voltage (requirement: minimum 49.5 V DC). Connect cable from control & distribution panel to battery string cable. Repeat for each battery string to be installed.

1.

**DANGER:**
*Batteries are electrically live at all times and are capable of supplying high short circuit currents. Each battery comes with a plastic cover. Do not remove the cover until access to the terminals is required.*

**CAUTION:**
*Batteries should be handled carefully; the plastic container can be damaged if dropped. Never lift batteries by holding terminal posts.*

Get eight *Chloride* 3VB11 (COMCODE 405890336) batteries [Figure 1] and hardware (but discard connecting straps). Get cable assemblies (shipped with cabinet as Group 62) for connecting batteries:

8 — *Chloride* battery cable assemblies (COMCODE 846279149) [includes positive battery cable **BAT (+),** negative battery cable **BAT (–),** and cable separator]

1 — patch cord **JMP(+)/JMP(–)** (COMCODE 846279107)

1 — battery string cable **STR1/BAT1(+)/BAT8(–)** (COMCODE 846279115).

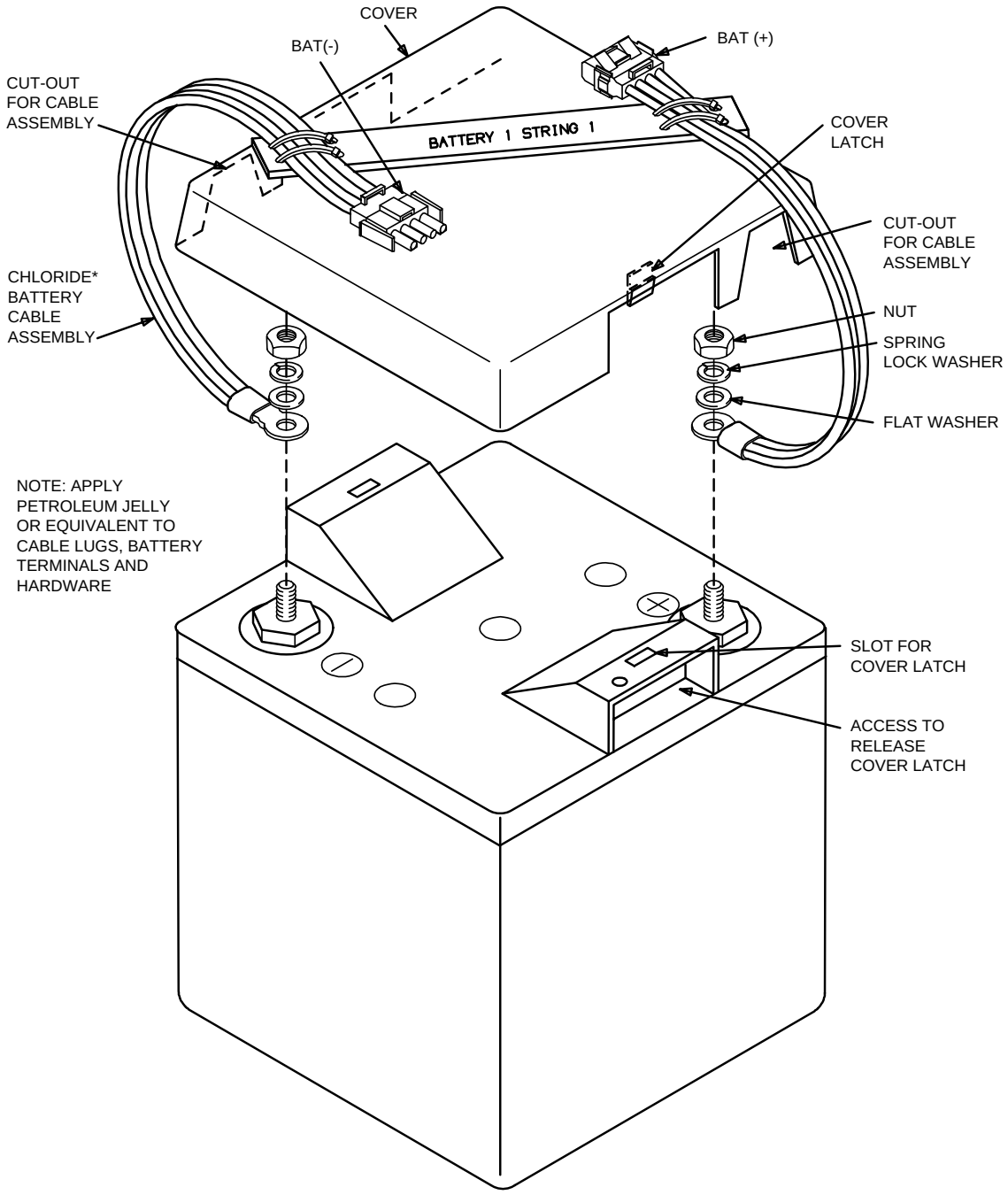


**Figure 1 – Detail of Chloride Batteries and Cable Assembly**

2. Visually inspect batteries for cracks, leakage, or other damage. Inspect cable assemblies for damage. Replace batteries or cables that appear damaged or defective.

3. Condition DMM to measure DC volts.

4. Measure terminal voltage of each battery. Does meter indicate 6.2 V DC or higher for each battery?

   If **YES,** then proceed to Step **6.**
   If **NO,** then continue with Step **5.**

5. Replace any battery that measures less than 6.2 V DC.

6. ⚠ **DANGER:**
   *Insulated tools must be used, and any rings, watches, bracelets, etc. must be removed when working on batteries.*

   ⚠ **CAUTION:**
   *Do not loosen large hexagonal nut at bottom of each terminal. Doing so will release terminal seal and may cause permanent damage to battery.*

   ⚠ **CAUTION:**
   *Battery covers have 2 latches, one on each side (in the handle) of the battery, accessed through battery handle opening. These latches must be depressed to remove cover, otherwise latches will break.*

   Remove battery covers and retain for fitting after battery cables are terminated. With permanent marker, mark each cable separator label with battery string identification.

7. Wipe battery terminals until clean and dry.

8.

**CAUTION:**
*For proper connection, make sure flat side of cable lug is installed **first** on battery post!*

On cable assembly [Figure 1], connect **BAT (+)** cable to **+** (positive) terminal of battery by installing cable lug, flat washer, spring lock washer, and nut on battery post. **Use only open-end wrench supplied with battery to tighten nut** (which prevents over-tightening). If no wrench is supplied, torque wrench may be used to tighten nut (8mm) to recommended fastening torque value of 4 ft-lbs (48 in-lbs). Do not overtighten.

9. On cable assembly [Figure 1], connect **BAT (–)** cable to – (negative) terminal of battery by installing cable lug, plain washer, spring lock washer, and nut on battery post. **Use only open-end wrench supplied with battery to tighten nut** (which prevents over-tightening). If no wrench is supplied, torque wrench may be used to tighten nut (8mm) to recommended fastening torque value of 4 ft-lbs (48 in-lbs). Do not overtighten.

10. Double check connections to make sure they are correct.

11. Apply petroleum jelly or equivalent on terminal connections as needed to prevent corrosion.

12. Install plastic cover (removed in Step **6**) on battery. Remove cut-outs in side wall of cover [Figure 1] as needed to fit over cable assembly.

13. Repeat from Step **7** for remaining batteries in battery string.

14. Before installing the batteries in the battery compartment, verify the supporting screws (see label on the battery compartment door) have been installed. Mounting the batteries without the support screws will deform the cabinet and the doors will not close.

15. Use special key (modified hex key) and 216-tool to open doors to battery compartment (in cabinet skirt).

16.

**NOTE:**
Connectors are "keyed" and must be properly oriented to be connected.

Connect patch cord [Figure 2] to **BAT (–)** connector of battery **3** (or battery **2** for string 2 or 4).

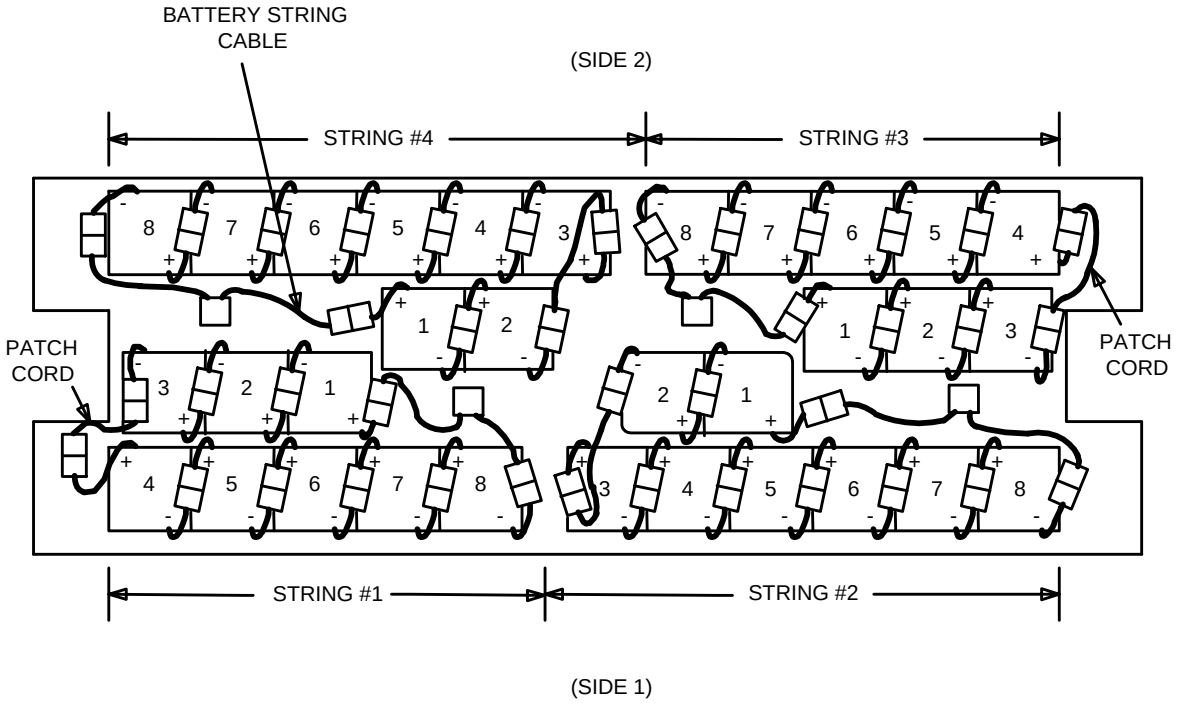


**Figure 2 – RT Battery Strings and Connections**

17. As shown in Figure 3, place batteries **1**, **2**, and **3** (with cable assemblies) in battery compartment in position for battery string 1 or 3. For battery string 2 or 4, place only batteries **1** and **2** in position [Figure 3]. Place batteries as close as possible to reference measurements.

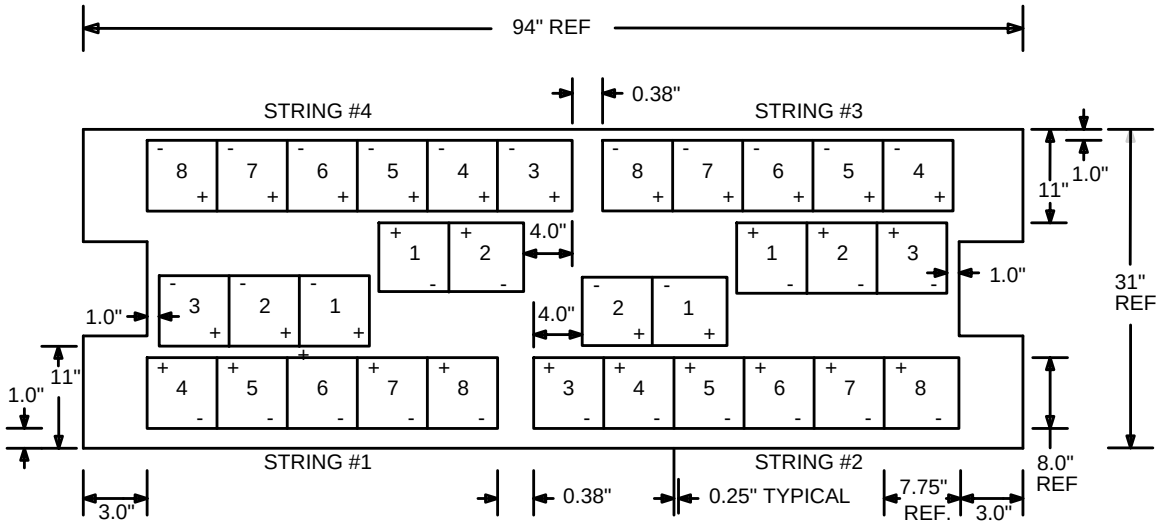


NOTE: DETAILS NOT SHOWN FOR CLARITY.

**Figure 3 – Positions of RT Batteries in 80E Cabinet Battery Compartment**

18.

**DANGER:**
*When connecting batteries together, be careful **not** to connect together the positive and negative terminals of the **same** battery.*

Connect batteries together by plugging **BAT (–)** connector from one battery into **BAT (+)** connector from next battery [Figure 2].

19. For battery string 1 or 3, place batteries **4** through **8** in positions shown in Figure 3. For battery string 2 or 4, place batteries **3** through **8** in position.

20. Connect other end of patch cord [Figure 2] to **BAT (+)** connector of battery **4** (or battery **3** for string 2 or 4).

21.

**DANGER:**
*When connecting batteries together, be careful **not** to connect together the positive and negative terminals of the **same** battery.*

Connect batteries together by plugging **BAT (–)** connector from one battery into **BAT (+)** connector from next battery [Figure 2]. Repeat for remaining batteries in battery string.

22. Connect battery string cable to battery string: plug **BAT1 (+)** (female) connector to **BAT (+)** connector from battery **1** and **BAT8 (–)** (male) connector to **BAT (–)** connector from battery **8**.

23. Condition DMM to measure DC volts. Measure battery string voltage at gray **STR( )** connector (across clips) of battery string cable.

24. Does meter indicate battery string voltage of 49.5 V DC (absolute) or higher?

    If **YES,** then proceed to Step **25.**
    If **NO,** then continue with Step **24.**

25. Recheck battery connections for proper (positive to negative) sequence. Correct if necessary. If connections are correct, check individual battery voltage (can be measured through cover). Any battery that indicates less than 6.2 V DC should be replaced. If all batteries indicate less than 6.2 V DC, refresher charge may be necessary. Refer to manufacturer's instructions for refresher charge operation.

26. **DANGER:**
    *After connectors are mated, power bus will be "live" (i.e., have voltage on it).*

    Connect together gray connectors on **STR( )** (1, 2, 3, or 4) battery string cable and **STR( )** (1, 2, 3, or 4) cable from control & distribution panel.

27. Dress and secure cables to the top of the battery compartment as necessary to keep them above batteries (in case of flood).

28. **NOTE:**
    To measure battery string voltage accurately, disconnect any battery strings other than battery string being measured. [To disconnect other battery strings, unplug **STR( )** battery string cable connector (gray) from **STR( )** battery cable connector (gray) from control & distribution panel.]

    On control & distribution panel [Figure 4], connect DMM to **BAT( )** (1, 2, 3, or 4) test point and **PVR** test point for battery string being installed.

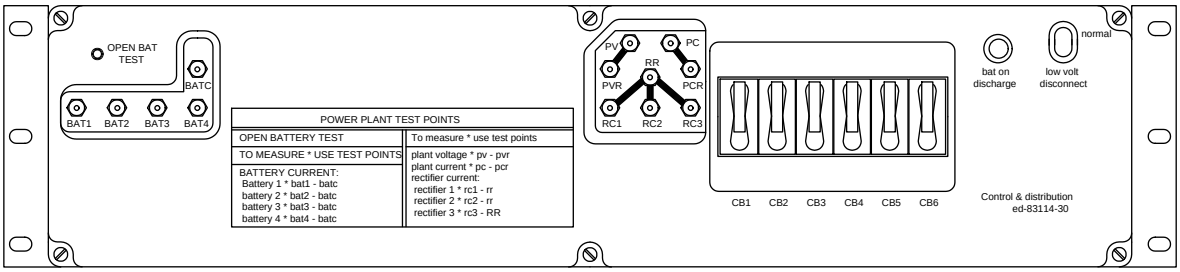


**Figure 4 – Control & Distribution Panel**

29. Does meter indicate battery string voltage of 49.5 V DC or higher?

    If **YES,** then proceed to Step **30.**
    If **NO,** then continue with Step **29.**

30. Visually inspect cable assembly between control & distribution panel and battery string. Replace cable assembly fuse and/or cable assembly until meter indicates correct voltage.

31. Is this the last battery string to be installed?

    If **YES,** then proceed to Step **31.**
    If **NO,** then repeat from Step **1** for next battery string.

32. Reconnect any battery strings disconnected for battery string voltage measurement. Close and secure doors to battery compartment.

    **STOP. YOU HAVE COMPLETED THIS PROCEDURE.**

# Install Lineage 2000 VR Series Batteries in 80E Cabinet Battery Compartment

**SUMMARY:** Unpack and visually inspect the batteries for damage. Measure the voltage of each battery. Requirement: 4.20 V DC or higher. Place batteries in the battery compartment (Figure 1). Coat inter-battery bus bars with NO-OXid grease. Connect the batteries together with the bus bar as shown in Figure 2. Connect battery string cable to batteries 1 and 12. Check the battery string voltage, note polarity and voltage (Requirement: minimum 50.4 V DC). Connect cable from control & distribution panel to battery string cable. Repeat for each battery string to be installed.

1.

**DANGER:**
*Batteries are electrically live at all times and are able to supply several thousand amperes short circuit current. Great care should be exercised to avoid short circuiting the battery terminals. Insulated tools must be used; any rings, watches, bracelets, etc. must be removed when working on batteries.*

**DANGER:**
*Any contact of electrolyte with skin or clothing should be avoided. If contact occurs, the electrolyte can be neutralized by flushing with plenty of water. If electrolyte enters the eye, immediately flush the eye with water and seek medical help. If the batteries appear damaged in shipping, protective rubber apron, rubber gloves and goggles should be worn by persons handling the batteries.*

**CAUTION:**
*The Lineage 2000 VR Series battery is valve regulated, starved electrolyte lead acid cell. Should the case crack, it is possible that small amount of electrolyte (one ounce) could leak out. The electrolyte is sulfuric acid and should be handled as highly corrosive material. No battery installation should be attempted unless the installer has ready access to several gallons of water and a package of baking soda. Baking soda or solution of baking soda and water may be used to neutralize small amounts of electrolyte.*

2. Get equipment for installation:
   - (1) ED-83242-30, G3 which consists of 12 Lineage 2000 VR series batteries, 11 inter-battery bus bars, 24 1/4-inch lock washers, 24 1/4-inch nuts, a container of the NO-OXid grease and a form 1285 (all these items are supplied with the batteries).
   - (1) battery string cable (comcode 846278224, one for each battery string) (shipped with the cabinet as Group 63).
   - torque wrench (range between 30 inch lb. and 200 inch lb.) with insulated handle (or insulate the handle with electrical tape).
   - 7/16-inch socket (for the 1/4-20 nut).

3. Unpack the batteries and inspect for physical damage. Do not install any cell that appears to be damaged. Any cell that has leaked electrolyte should be considered defective.

4. Condition DMM to measure DC volts.

5. Measure the terminal voltage of each battery. Does meter indicate 4.20 V DC or higher for each battery?

   If **YES**, then proceed to Step **6.**
   If **NO**, then continue with Step **5.**

6. Replace any battery that measures less than 4.20 V DC.

7. Wipe battery terminals until clean and dry.

8. ⚠ **CAUTION:**
   *Before installing the batteries in the battery compartment, verify the supporting screws (see label on the battery compartment door) have been installed. Mounting the batteries without the support screws will deform the cabinet and the doors will not close.*

9. Use special hex key (modified hex key) and 216-tool to open the battery compartment doors.

10. Place all twelve batteries in the battery compartment as shown in Figure 1.

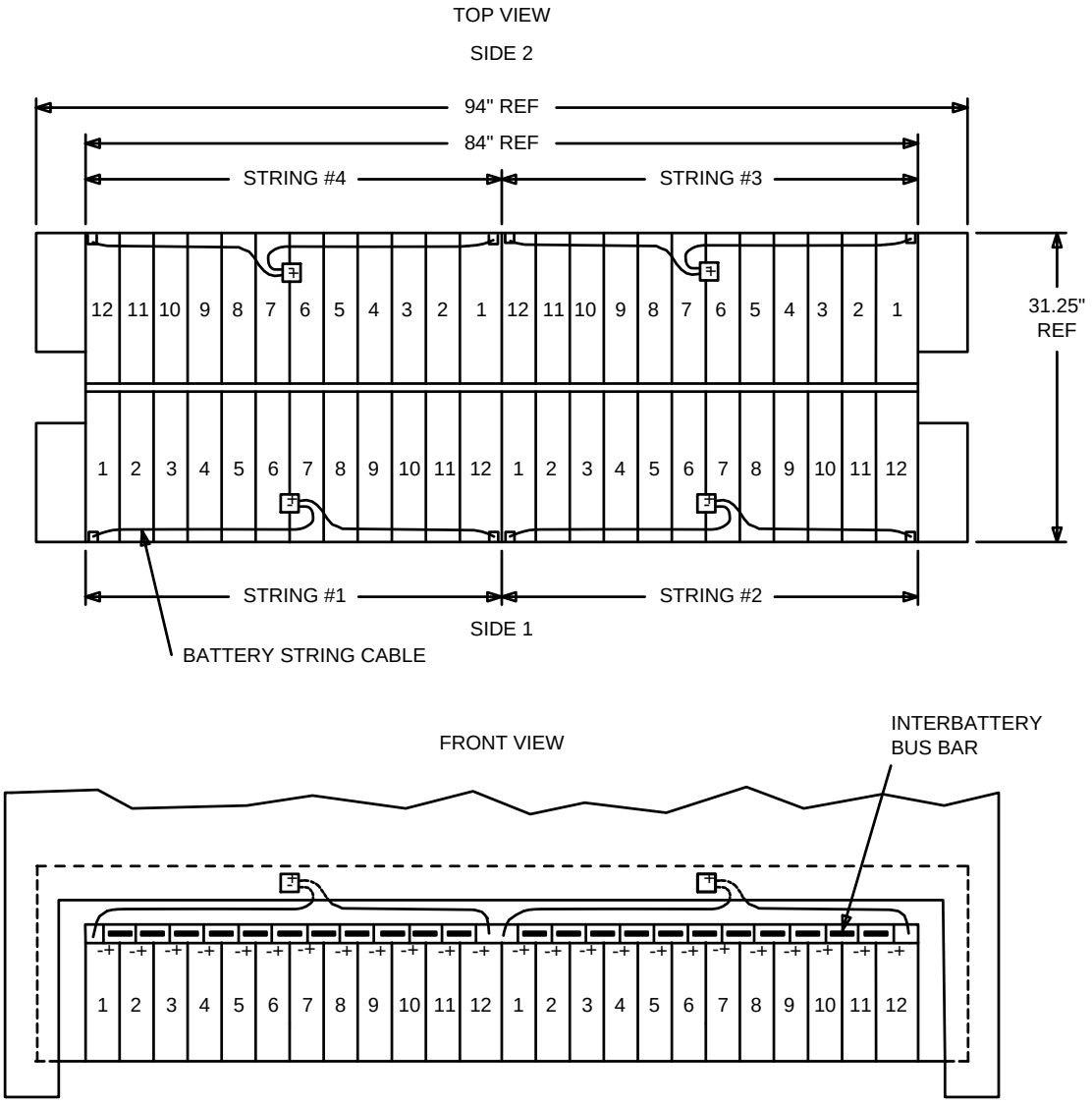


**Figure 1 – Layout of Lineage 2000 VR Series Batteries in 80E Cabinet**

11. Coat inter-battery bus bars with NO-OXid grease and install on the batteries as shown in Figure 2. Install 1/4 inch lock washer and nut on battery post. Using insulated torque wrench with the socket, tighten nut to 55 in-lbs torque. Repeat for each battery post until all 12 batteries are connected together.

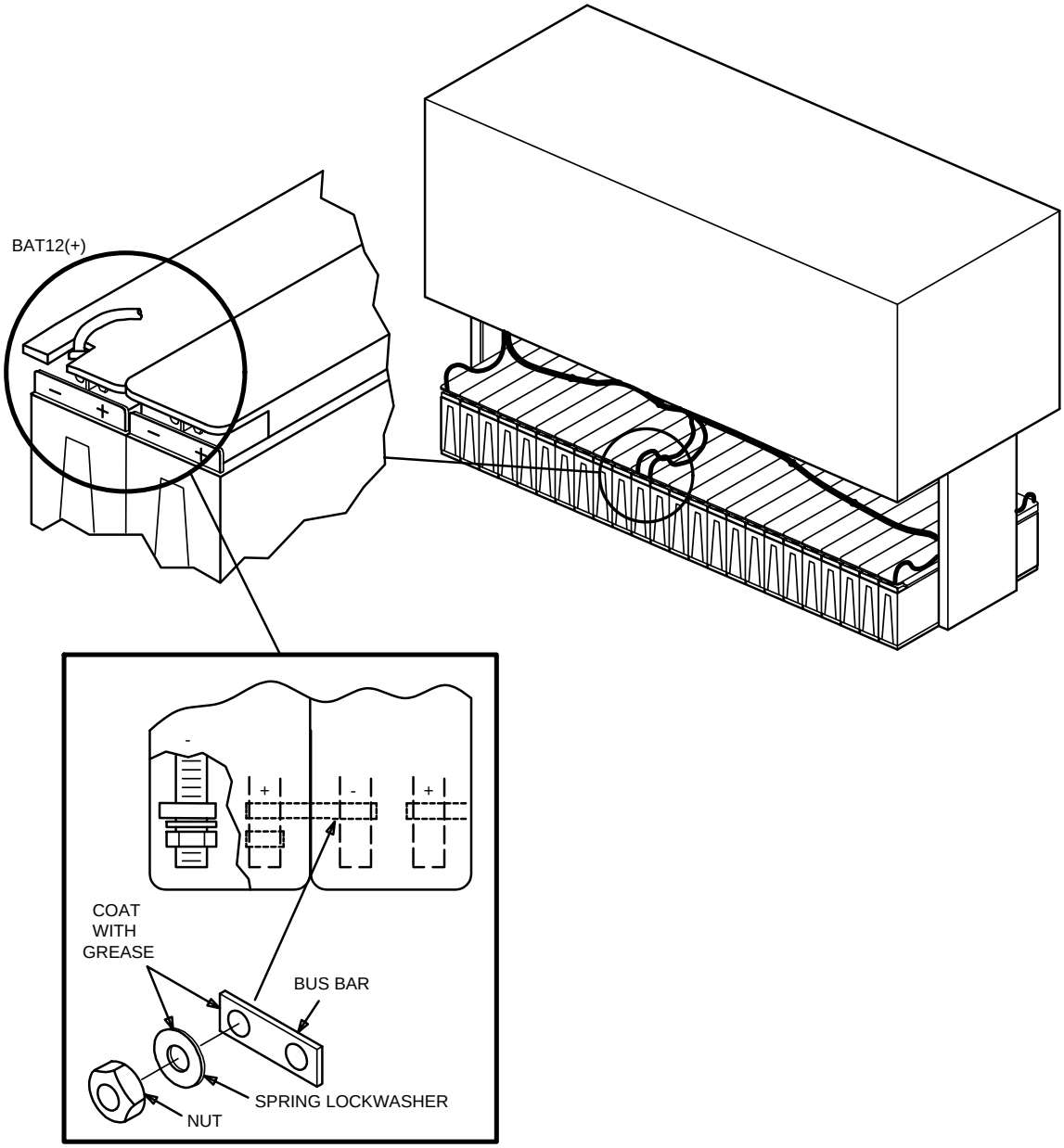


**Figure 2 – Battery String Connections for Lineage 2000 VR Series Batteries**

12. Cut a notch in the cover of the battery No. 1 (above "–" battery post) and battery No. 12 (above "**+**" battery post) (see Figure 2). This is required to install the battery string cable.

13. Connect the battery string cable to battery No. 1 by terminating the lug marked **BAT 1 (–)** to the "–" (negative) battery post of the first battery in the string (Figure 2). Connect the battery string cable to battery No. 12 by terminating the lug marked **BAT 12 (+)** to the "**+**" (positive) battery post of the 12th battery as shown in Figure 2. Install the lock washer and nut on the battery posts. Use insulated torque wrench to tighten the nuts to 55 in-lbs torque.

14. Coat each battery connection with NO-OXid grease.

15. Condition DMM to measure DC volts. Measure battery string voltage at the connector (marked **STR** "**+**" and "–") at the end of the battery string cable. Make sure measured polarity corresponds with polarity indicated on connector.

16. Does meter indicate battery string voltage between –50.4 V DC and –51.4 V DC?

    If **YES**, then proceed to Step **16.**
    If **NO**, then continue with Step **15.**

17. Make sure that there are twelve batteries in the string. Recheck battery connections and correct if necessary. If connections are correct, check individual battery voltage. Any battery that indicates less than 4.20 V DC should be replaced.

18. ⚠ **DANGER:**
    *After the connector from the control & distribution panel is mated with the connector from the battery string cable, the power bus on the control & distribution panel will be "live" (that is, have voltage on it).*

    Connect the battery string cable **STR** connector to the connector designated **STR( )** (1, 2, 3 or 4) on the end of the battery cable located in the battery compartment.

19. Dress cables in the battery compartment.

20.

**NOTE:**
To measure the battery string voltage accurately, disconnect any battery strings other than battery string being measured. [To disconnect other battery strings, unplug the battery string cable connector marked **STR** from the battery cable connector marked **STR( )**.]

On control & distribution panel, connect DMM to **BAT( )** (1, 2, 3 or 4) test point and **PVR** test point for battery string being installed.

21. Does meter indicate battery string voltage of 50.4 V DC or higher?

    If **YES**, then proceed to Step **21.**
    If **NO**, then continue with Step **20.**

22. Visually inspect cable assembly between control & distribution panel and battery string. Replace cable assembly fuse and/or cable assembly until meter indicates correct voltage.

23. Is this the last battery string to be installed?

    If **YES**, then proceed to Step **22.**
    If **NO**, then repeat from Step **1** for next battery string to be installed.

24. Disconnect test equipment. Reconnect any battery strings disconnected for voltage measurement. Close and lock battery compartment door.

25. Between one and three hours after the rectifiers are installed, measure the voltage of each battery in the string and record on form 1285 supplied with the batteries. Meter should indicate between 4.44 V DC and 4.64 V DC for each battery. Any battery outside this limit should be measured again within one week. If it is still outside the limit, replace battery.

**STOP. YOU HAVE COMPLETED THIS PROCEDURE.**

# Verify Connections to ED-83114-30 Control & Distribution Panel

**SUMMARY:** Verify AC power is off. Verify power and ground cables are connected. Verify connections on AYK1 and AYK2 circuit packs. Verify rectifier control cable connections to control & distribution panel. Verify battery installation.

1. On AC power panel, verify that AC power (utility) **CB1** circuit breaker is off and **CB6** (R1), **CB7** (R2), and **CB8** (R3), circuit breakers (for AC feeders to rectifier shelf) are also off [Figure 1].

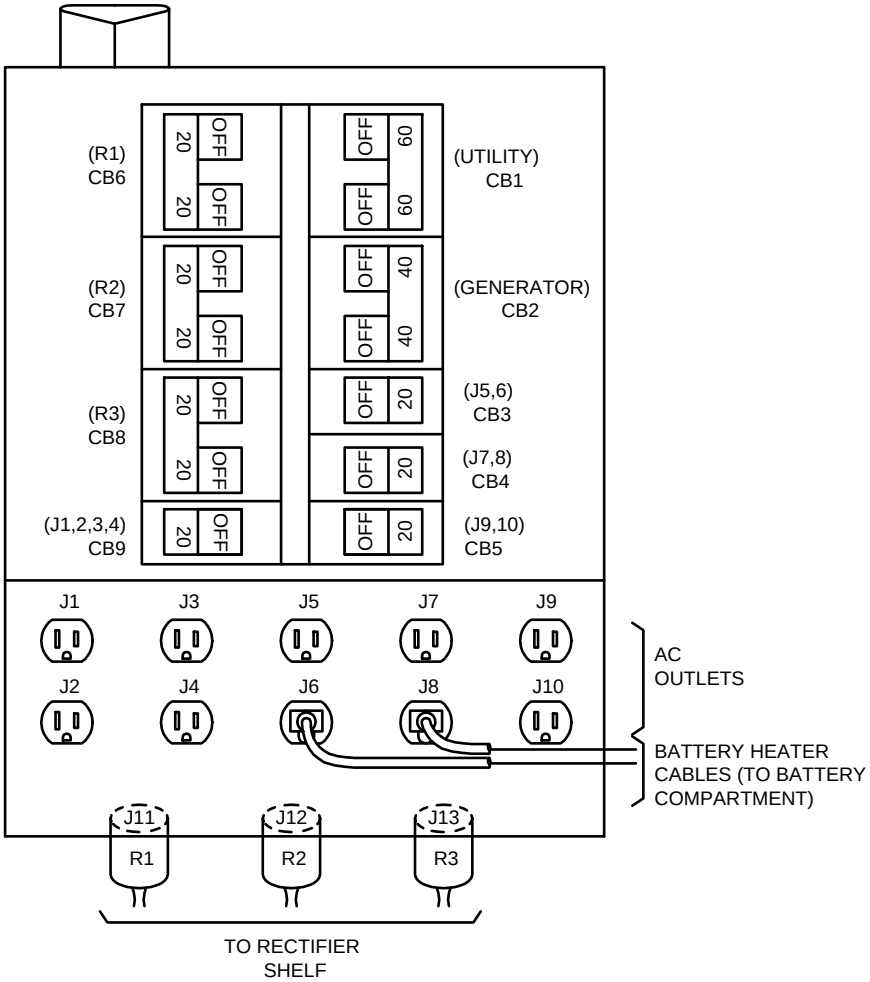


**Figure 1 – AC Power Panel in ED-7C703-30 80E Cabinet**

2. Verify no power units are installed.

3. Remove cover from control & distribution panel [Figure 2].

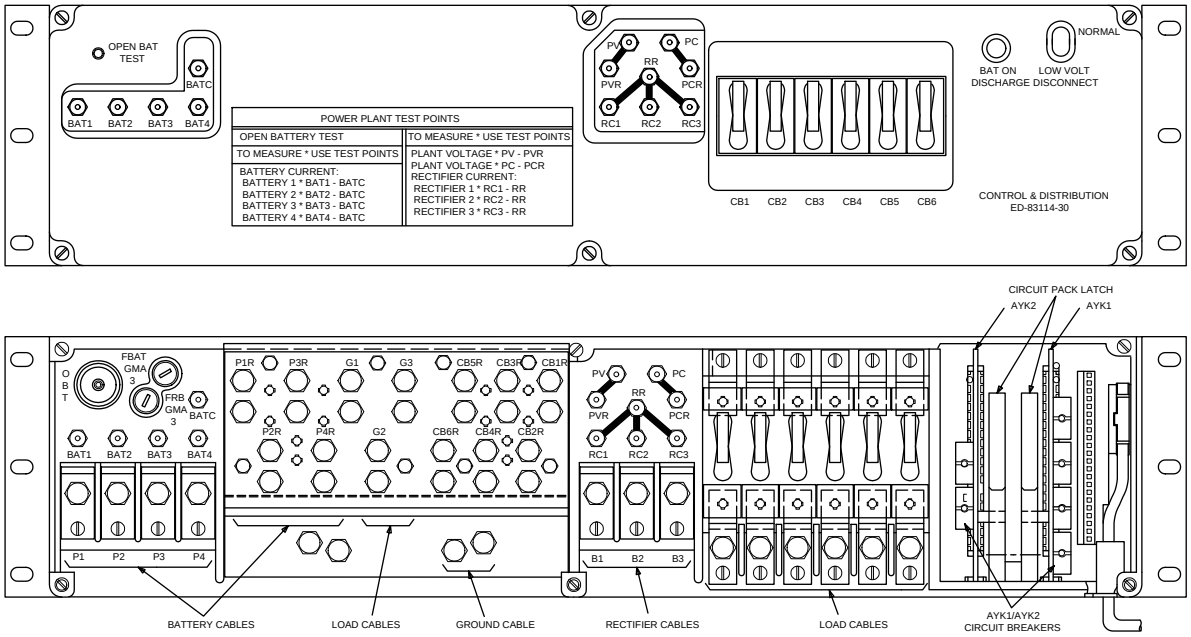


**Figure 2 – Connections to Control & Distribution Panel**

4. Verify rectifier cables are connected to **B1**, **B2**, and **B3** terminals [Figure 2]. Verify rectifier return ground cables are connected to **G1**, **G2**, and **G3** terminals [Figure 2].

5. Verify at least one battery string is connected to control & distribution panel [in battery compartment, make sure **STR( )** connector is connected to battery string]. Condition DMM to measure DC volts. Measure battery string voltage at **BAT( )** test point and **PVR** test point: meter will indicate 50.00 V DC or more if battery string is connected.

6. Unseat (but do not remove) AYK1 circuit pack [Figure 3]. Verify rectifier control cables are connected with connectors firmly seated in **J3**, **J2**, and **J1** sockets [Figure 3].

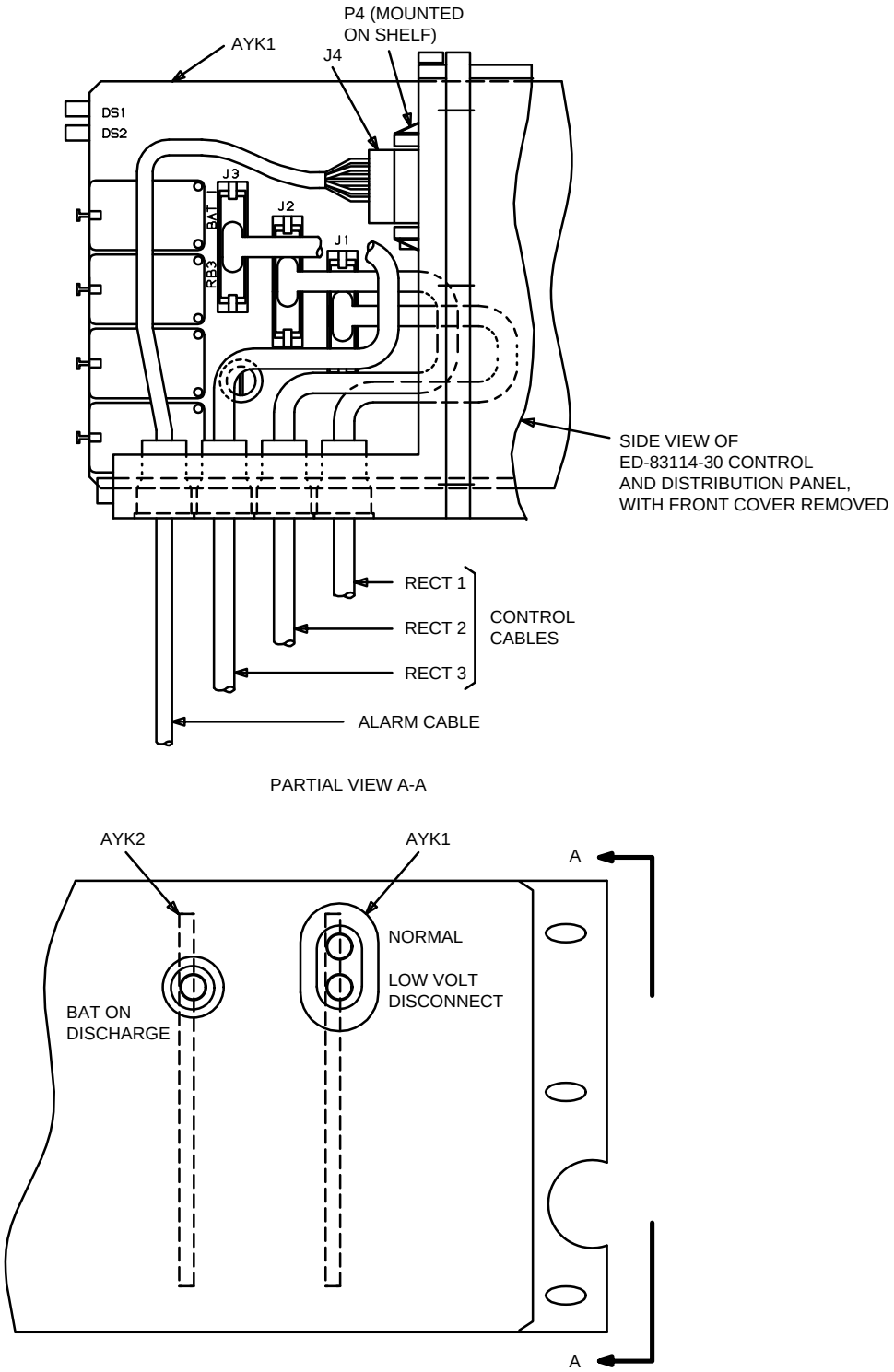


**Figure 3 – AYK1 Circuit Pack Mounted in Control & Distribution Panel**

7. Reseat AYK1 circuit pack. Verify AYK1 and AYK2 circuit packs are fully seated. On AYK1 and AYK2, verify all circuit breakers are set (pins pushed in).

8. On right-hand side of shelf [Figure 3], verify alarm cable is connected with **J4** connector firmly seated in **P4** socket [Figure 3].

9. 

   **NOTE:**
   The **FBAT** and **FRB** fuses are factory installed and should not be removed.

   On control & distribution panel, verify **FBAT** and **FRB** fuse holders are installed. On inside of panel cover, verify spare fuses are present and properly installed in fuse holders.

10. Replace cover on control & distribution panel.

    **STOP. YOU HAVE COMPLETED THIS PROCEDURE.**

# Install and Test Power Units in Rectifier Shelf

**SUMMARY:** Install CS787B540 power units. Connect AC input and turn on AC power. On power units, measure float voltage. Requirement: between –54.3 V DC and –54.7 V DC. Connect output and control cables to power units. Requirement: **NORMAL** indicator lighted on control & distribution panel. Measure power unit output voltage. Requirement: between –54.3 V DC and –54.7 V DC. On control & distribution panel, turn on **CB( )** circuit breaker(s) for systems to be installed.

1. On AC power panel, verify that AC power **CB1** (utility) circuit breaker is off and **CB6**, **CB7**, and **CB8** circuit breakers for R1, R2, and R3 feeders to rectifier shelf are also off [Figure 1].

2. Release cover from front of rectifier shelf.

3. Get **CS787B540** power unit (48 V DC, 25A OLS rectifier) and inspect for damage.

4. On rectifier shelf, set power unit in **RECTIFIER 1**, **RECTIFIER 2**, or **RECTIFIER 3**, position for power unit being installed [Figure 2]. Connect **P905-( )** (P905-1, P905-2, or P905-3) AC input cable to **J905/V IN** connector on power unit [Figure 3].

   Comment: These power units have no backplane connector. Power and control cables plug in to connectors on right-hand side of power unit.

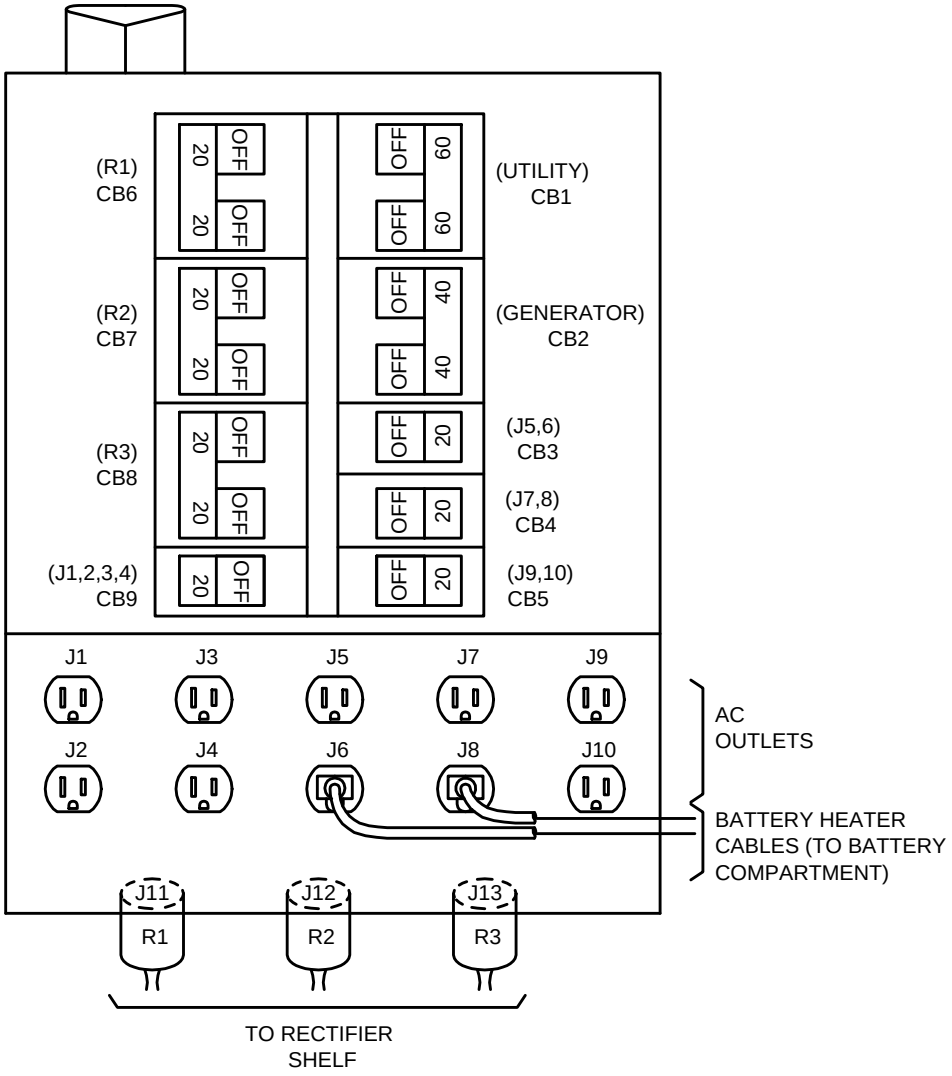


**Figure 1 – Ac Power Panel in ED-7C703-30 80E Cabinet**

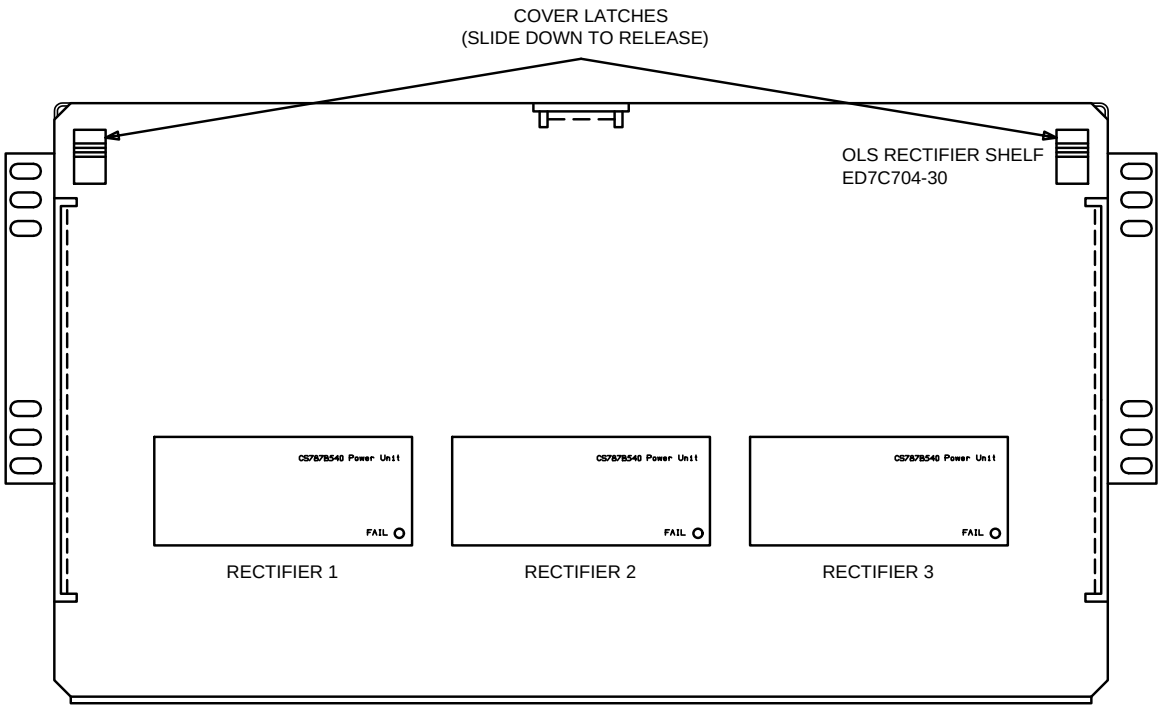


**Figure 2 – ED-7C704-30 Rectifier Shelf (With Cover)**

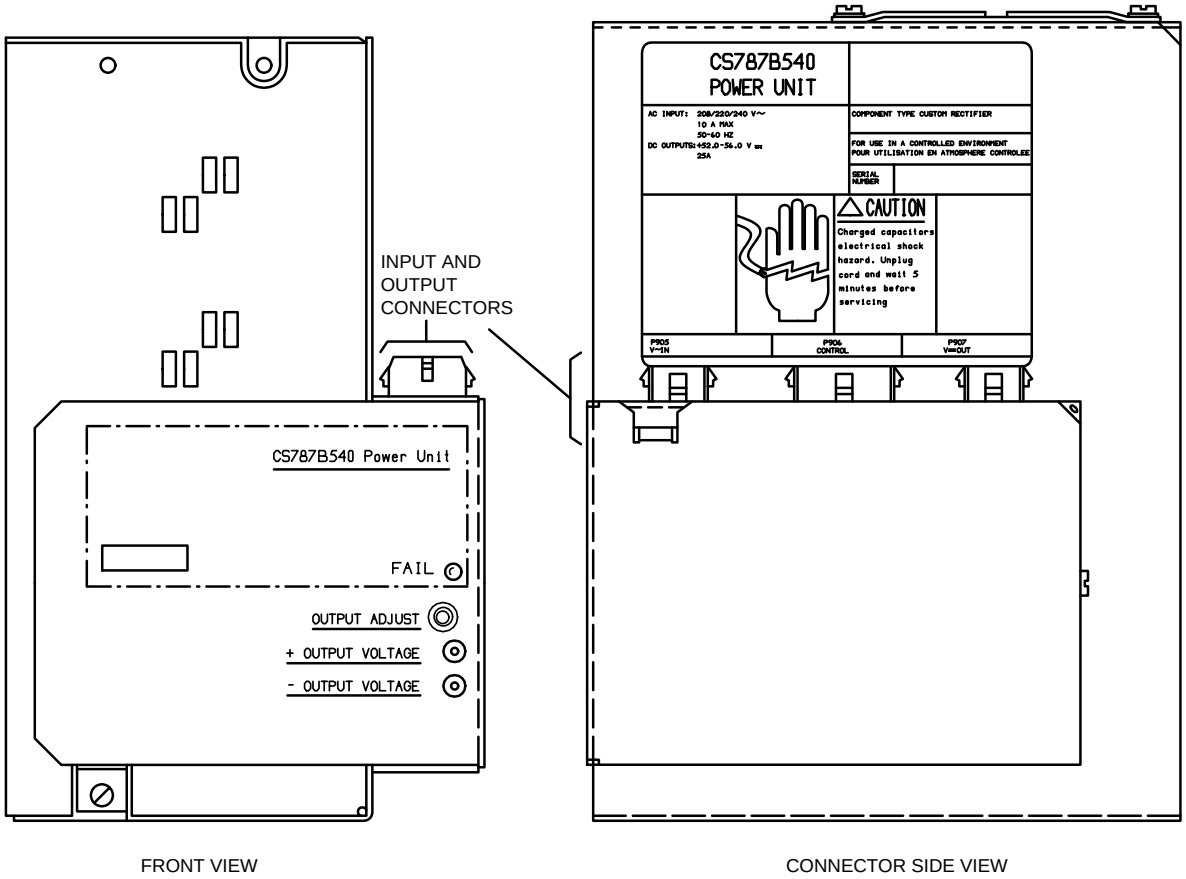


**Figure 3 – Front and Top View of CS787B540 Power Unit**

5. On AC power panel, turn on **CB1** (utility) circuit breaker.

6. On AC power panel for power unit being installed, verify **R( )** (R1, R2, R3) AC power cord from rectifier shelf is plugged into correct AC outlet [Figure 1]. Turn on **CB( )** (CB6, CB7, or CB8) circuit breaker to this feeder.

7. On power unit, is **FAIL** indicator off?

   If **YES,** then proceed to Step **11.**
   If **NO,** then continue with Step **8.**

8. On AC power panel for power unit being installed, turn off circuit breaker to **R( )** feeder to power unit.

9. On rectifier shelf, unplug P905 connector and replace power unit.

10. Repeat from Step **4.**

11. Condition DMM to measure DC volts. Meter accuracy must be ±0.3% or better.

12. On power unit, connect DMM to **+ OUTPUT VOLTAGE** and – **OUTPUT VOLTAGE** test points. Measure DC output voltage (power unit float voltage).

13. Does meter indicate between –54.3 V DC and –54.7 V DC?

    If **YES,** then proceed to Step **17.**
    If **NO,** then continue with Step **14.**

14. On AC power panel for power unit being installed, turn off circuit breaker to **R( )** feeder to power unit.

15. On rectifier shelf, unplug P905-( ) connector and replace power unit.

16. Repeat from Step **4.**

17. Is this the last power unit to be installed?

    If **YES,** then proceed to Step **19.**
    If **NO,** then continue with Step **18.**

18. On AC power panel for *installed* power unit, turn off circuit breaker to **R( )** feeder and repeat from Step **3** for next power unit.

19. On AC power panel, verify **CB( )** circuit breaker(s) are off for **R( )** feeder to power unit(s) being installed.

20. On control & distribution panel, verify **CB( )** circuit breakers are off.

21. On rectifier shelf, connect **P906** (P906-1, P906-2, or P906-3) cable to **J906/CONTROL** connector and **P907** (P907-1, P907-2, or P907-3) cable to **J907/V**–**OUT** connector on each power unit being installed [Figure 3].

22. On AC power panel, turn on circuit breaker(s) for **R( )** feeder to power unit(s).

23. On control & distribution panel, is **NORMAL** indicator lighted?

    If **YES,** then proceed to Step **25.**
    If **NO,** then continue with Step **24.**

24. Check circuit breakers on AYK1 and AYK2 circuit packs. Reset any breaker that has tripped (pin popped out). If breaker trips again, replace circuit pack. If **NORMAL** indicator remains off, reinstall original circuit pack. Trouble may be in P906-( ) rectifier control cables, P907-( ) rectifier output cables, or J4 alarm cable between control & distribution panel and rectifier shelf. To check wiring on control & distribution panel, refer to SD-83109-01. To check 80E cabinet cabling, refer to SD-7C158-01 application schematic. Correct wiring problem until **NORMAL** indicator is lighted.

25. Connect DMM to **PV** and **PVR** test points.

26. Does meter indicate between –54.3 V DC and –54.7 V DC?

    If **YES,** then proceed to Step **28.**
    If **NO,** then continue with Step **27.**

27. Refer to SD-83109-01 to check wiring on control & distribution panel. Correct wiring problem until meter indicates correctly.

28. 

    **NOTE:**
    Each circuit breaker on control and distribution panel supplies an equipment bay according to the cabinet group arrangement. To identify circuit breakers, refer to the label located on the door opposite the Control and Distribution Panel.

    On control & distribution panel, turn on **CB( )** circuit breaker to equipment bay for system(s) being installed.

    **STOP. YOU HAVE COMPLETED THIS PROCEDURE.**

# Install 3C( ) Ringing Generators in Ring Shelf

**SUMMARY:** Install **3C( ) RINGING GENERATOR** into **GROUP 1** side - **RING GEN1** slot in ring shelf. Verify **FAIL** indicator is off. Measure –43 to –56 V DC at –**48V**/**GND**, and 90 to 110 V AC and –50 to –60 V DC at –**20HZ**/**GND**. Install **RING GEN2** and repeat. For full shelf operation (BELLCORE mode), move **P116B**, cut straps at central interconnection panel, and install and test ringing generators in **GROUP 2** side of shelf.

1.

   **NOTE:**
   The **CB1** circuit breaker on the control & distribution panel provides power to ring shelf and other equipment mounted in **POSITION 1** of the cabinet.

   On control & distribution panel, verify **CB1** circuit breaker is on and **NORMAL** indicator is lighted.

2. Get two **3C( ) RINGING GENERATOR**s and inspect for possible physical damage.

3. Install one **3C( ) RINGING GENERATOR** into **GROUP 1** side - **RING GEN1** slot in ringing shelf [Figure 1].

4. Is **FAIL** indicator lighted on **RINGING GENERATOR**?

   If **YES,** then continue with Step **5.**
   If **NO,** then proceed to Step **6.**

5. Replace **RINGING GENERATOR** and repeat from Step **3.**

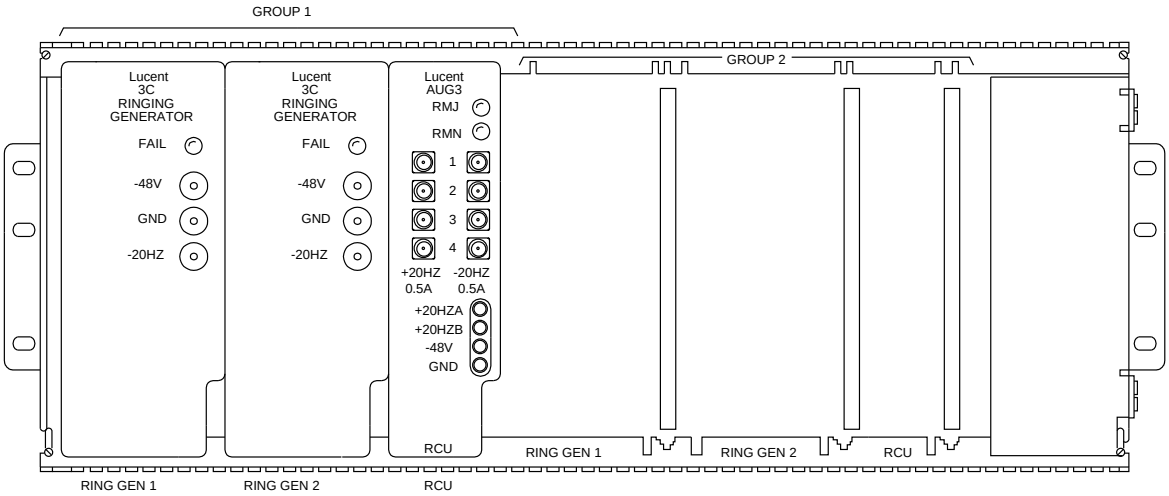


**Figure 1 – Ringing Generator Installed in Ring Shelf**

6. Condition DMM to measure DC volts.

7. On **RING GEN1**, connect DMM test leads to –**48V** jack and **GND** jack [Figure 1].

8. Does DMM indicate between –43 and –56 volts?

   If **YES,** then proceed to Step **14.**
   If **NO,** then continue with Step **9.**

9. Replace **RINGING GENERATOR**. Does DMM indicate between –43 and –56 volts?

   If **YES,** then proceed to Step **14.**
   If **NO,** then continue with Step **10.**

10. On right-hand side of ring shelf, disconnect **P117** connector. Connect DMM test leads to pin 8 (–48V) and pin 9 (–48V RTN) [Figure 2].

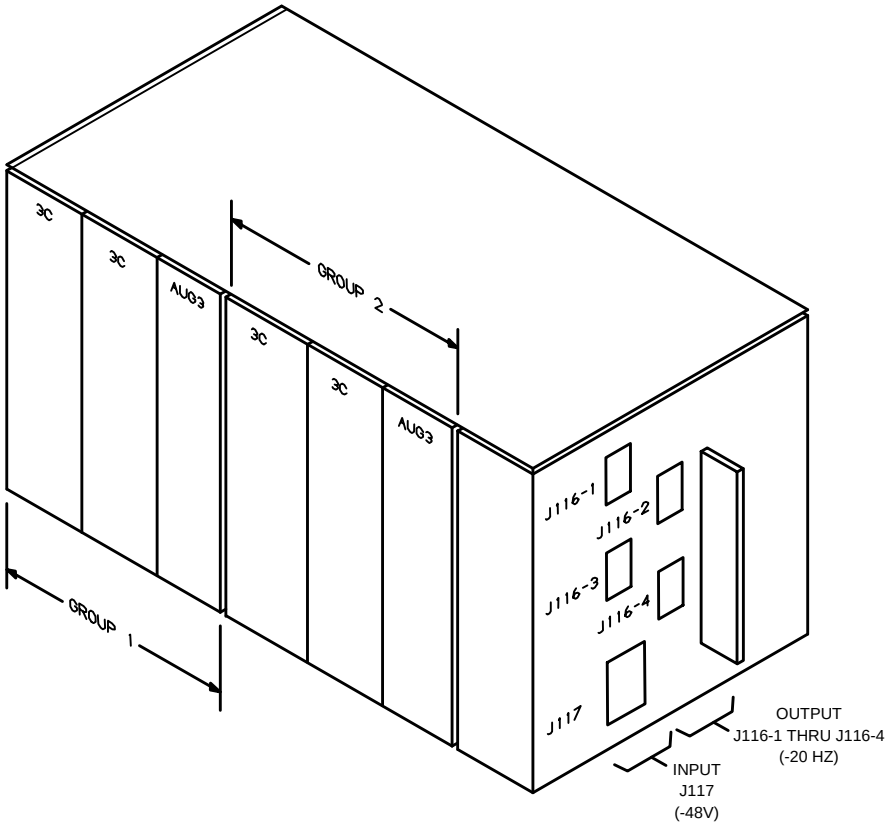


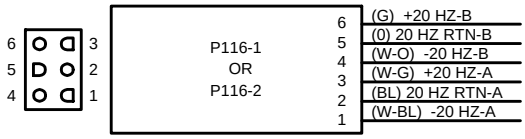


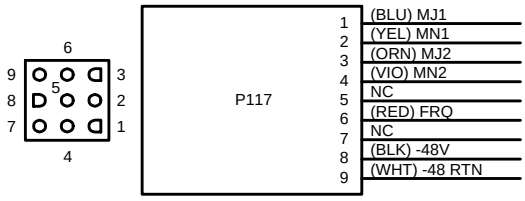


**Figure 2 – Connections to Ring Shelf**

11. Does DMM indicate between –43 and –56 volts?

    If **YES,** then proceed to Step **13.**
    If **NO,** then continue with Step **12.**

12. Refer to SD-7C158-01 to check connectors on 80E bulk power cabinet and correct wiring problem. Repeat from Step **7.**

13. Use SD-7C155-01 to correct problem in ring shelf wiring and repeat from Step **7.**

14. On **RING GEN1** at –**20HZ** jack and **GND** jack [Figure 1], measure DC negative ringing.

    Requirement: Meter indicates between –50 and –60 volts

15. Condition DMM to measure AC volts. Measure AC negative ringing at same jacks (–**20HZ** and **GND**).

    Requirement: Meter indicates between 90 and 110 volts.

16. Did meter indicate as required in Step **14** and Step **15**?

    If **YES,** then proceed to Step **18.**
    If **NO,** then continue with Step **17.**

17. Replace **RINGING GENERATOR** and repeat from Step **4.**

18. Has **RING GEN2** been installed and tested?

    If **YES,** then proceed to Step **20.**
    If **NO,** then continue with Step **19.**

19. Install second **RINGING GENERATOR** in **GROUP 1** side - **RING GEN2** slot in ringing shelf and repeat from Step **4** for **RING GEN2.**

20. Is group 2 side of shelf being equipped at this time (full shelf operation)?

    If **YES,** then continue with Step **21.**
    If **NO,** then **STOP. YOU HAVE COMPLETED THIS PROCEDURE**

21. At ring shelf, disconnect **P116B** connector from **J116-2** and reconnect it to **J116-3**.

22. 

    **NOTE:**
    The straps are cut to isolate alarms on **GROUP 1** side of ring shelf from alarms on **GROUP 2** side of ring shelf.

    At central interconnect panel on TS1, cut RGMJ strap between pins 21T2 and 21R2 and cut RGMN strap between pins 24T2 and 24R2.

23. Repeat from Step **2** for **GROUP 2** side of shelf.

    **STOP. YOU HAVE COMPLETED THIS PROCEDURE.**

# Install Ring Control Unit (RCU) in Ring Shelf

**SUMMARY:** Install **RCU** into ring shelf. Verify no fuses blown and no indicators lighted on **RCU**. Measure voltage at –**48V** and **GND**. Requirement: –43 to –56 V DC. Measure voltage at **+20HZA** and **GND**. Requirement: 50 to 60 V DC and 90 to 110 V AC. Measure voltage at **+20HZB** and **GND**. Requirement: 50 to 60 V DC and 90 to 110 V AC. Repeat as required for **RCU** in **GROUP 2**.

1. Get one **AUG3 RCU** [Figure 1] and inspect for possible physical damage.

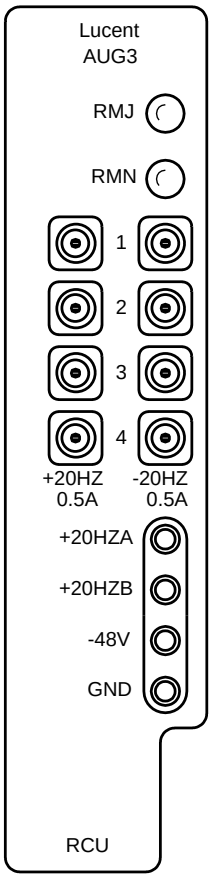


**Figure 1 – Ring Control Unit (AUG3) Faceplate**

2. Verify that each fuse holder on **RCU** faceplate contains an 80G (0.5A) fuse and that no fuses are blown. (Fuse bead will pop out when fuse is blown.)

3. Are any fuses blown?

   If **YES,** then continue with Step **4.**
   If **NO,** then proceed to Step **6.**

4. Use 553A extractor tool (COMCODE 997991575) (Techni-tool No. 594TE170) or 319B (KS-6305) extractor tool (COMCODE 100753904) (Techni-tool No. 490PL020) to remove blown fuses.

5. Install good 80G (0.5A) fuse in each empty fuse holder.

6. Verify that both 3C or 3A ringing generators are installed in **GROUP 1** side - **RING GEN 1** and **RING GEN 2** slots.

   Reference: DLP-528

7. On **GROUP 1** side, install **RCU** into **RCU** slot in ring shelf.

8. Do any fuses blow on **RCU**?

   If **YES,** then continue with Step **9.**
   If **NO,** then proceed to Step **15.**

9. Replace **RCU**. Do any fuses blow on **RCU**?

   If **YES,** then continue with Step **10.**
   If f **NO,** then proceed to Step **15.**

10. On ring shelf on right-hand side, disconnect P116 ringing output connectors, then replace blown fuses on **RCU**.

11. Do any fuses blow on **RCU**?

    If **YES,** then proceed to Step **13.**
    If **NO,** then continue with Step **12.**

12. Refer to SD-7C158-01 to check connectors on 80E bulk-power cabinet and correct wiring problem. Repeat from Step **8.**

13. Use SD-7C155-01 to correct wiring problem in ring shelf.

14. Reconnect J116 connectors and replace blown fuses on **RCU**. Repeat from Step **8.**

15. Is any indicator lighted on **RCU**?

    If **YES,** then continue with Step **16.**
    If **NO,** then proceed to Step **17.**

16. Replace **RCU** and repeat from Step **8.**

17. Get DMM and condition it to measure DC volts.

18. Connect DMM test leads to –**48V** jack and **GND** jack on **RCU**.

19. Does meter indicate –43 to –56 volts?

    If **YES,** then proceed to Step **21.**
    If **NO,** then continue with Step **20.**

20. Replace **RCU** and repeat from Step **8.**

21. On **RCU** at **+20HZA** jack and **GND** jack [Figure 1], measure DC positive ringing.

    Requirement: Meter indicates between 50 and 60 volts

22. Condition DMM to measure AC volts. Measure AC positive ringing at same jacks (**+20HZA** and **GND**).

    Requirement: Meter indicates between 90 and 110 volts.

23. Did meter indicate as required in Step **21** and Step **22**?

    If **YES,** then proceed to Step **25.**
    If **NO,** then continue with Step **24.**

24. Replace **RCU** and repeat from Step **8.**

25. Have both **+20HZA** and **+20HZB** jacks been tested?

    If **YES,** then proceed to Step **27.**
    If **NO,** then continue with Step **26.**

26. Condition DMM to measure DC volts and repeat from Step **21** for **+20HZB** jack.

27. Is group 2 being equipped at this time (full shelf operation)?

    If **YES,** then repeat from Step **1** for **GROUP 2** side of shelf.
    If **NO,** then **STOP. YOU HAVE COMPLETED THIS PROCEDURE**

# Install and Test Power Converter Units (PCUs) in RT Optics Power Shelf

**SUMMARY: Install PCU**s in RT optics power shelf and verify that **FAIL** indicator goes off and remains off. Measure –42 to –56 V DC at **PCU** faceplates.

1.

**NOTE:**
Each system in a dual bank assembly (e.g., blue system or white system) requires two **AUA11B PCU**s to be installed in the optics power shelf.

**CAUTION:**
*The AUA11B PCU must always be used in the RT optics power shelf. Do not use the AUA11 PCU in place of the AUA11B.*

Get the required number of **AUA11B PCU**s in accordance with the systems to be equipped.

2. Refer to Table A and insert the **PCU**s into the appropriate slots in the RT optics power shelf.

**Table A**

| PCU Slot | System to be Equipped | Associated Optical Shelf |
|---|---|---|
| PCU1 & 2 | Blue Lower | 1 |
| PCU3 & 4 | White Lower | 2 |
| PCU5 & 6 | Blue Upper | 3 |
| PCU7 & 8 | White Upper | 4 |

3.

**NOTE:**
**FAIL** indicator on **PCU** may light momentarily when inserted into RT optics power shelf.

Does **FAIL** indicator on **PCU** go off and remain off?

If **YES,** then proceed to Step **8.**
If **NO,** then continue with Step **4.**

4. Replace **PCU**.

5.

**NOTE:**
**FAIL** indicator on **PCU** may light momentarily when inserted into RT.

Does **FAIL** indicator on **PCU** go off and remain off?

If **YES,** then proceed to Step **8.**
If **NO,** then continue with Step **6.**

6. Replace **PCU** with **PCU** removed previously.

7. Use SD-7C150-01 to check RT optics power shelf wiring. Repeat procedure from Step **3** after locating and correcting trouble.

8. Is **MJ** indicator on **A/FCU** lighted?

If **YES,** then proceed to Step **9.**
If **NO,** then continue with Step **10.**

9. Inspect and/or replace the following in the order listed until the **A/FCU MJ** indicator goes out:
   - **WHITE** and **BLUE** fuses in **BFU1**
   - Each **PCU**
   - Optics power shelf wiring using SD-7C150-01.

10. Condition DMM to measure volts DC.

11. At one of the **PCU**s just installed, connect DMM test leads to **GND** jack and –**48** jack.

12. Does DMM indicate between –42 and –56 volts?

    If **YES,** then proceed to Step **21.**
    If **NO,** then continue with Step **13.**

13. Are any fuses on **BFU1** or **BFU2** blown?

    If **YES,** then continue with Step **14.**
    If **NO,** then proceed to Step **15.**

14. Replace blown fuse(s) in **BFU** and repeat procedure from Step **11**.

15. At **TB1** on RT optics power shelf (Figure 1), use DMM to measure voltage between –**48V1** and –**48RTN1** and between –**48V2** and –**48RTN2**.

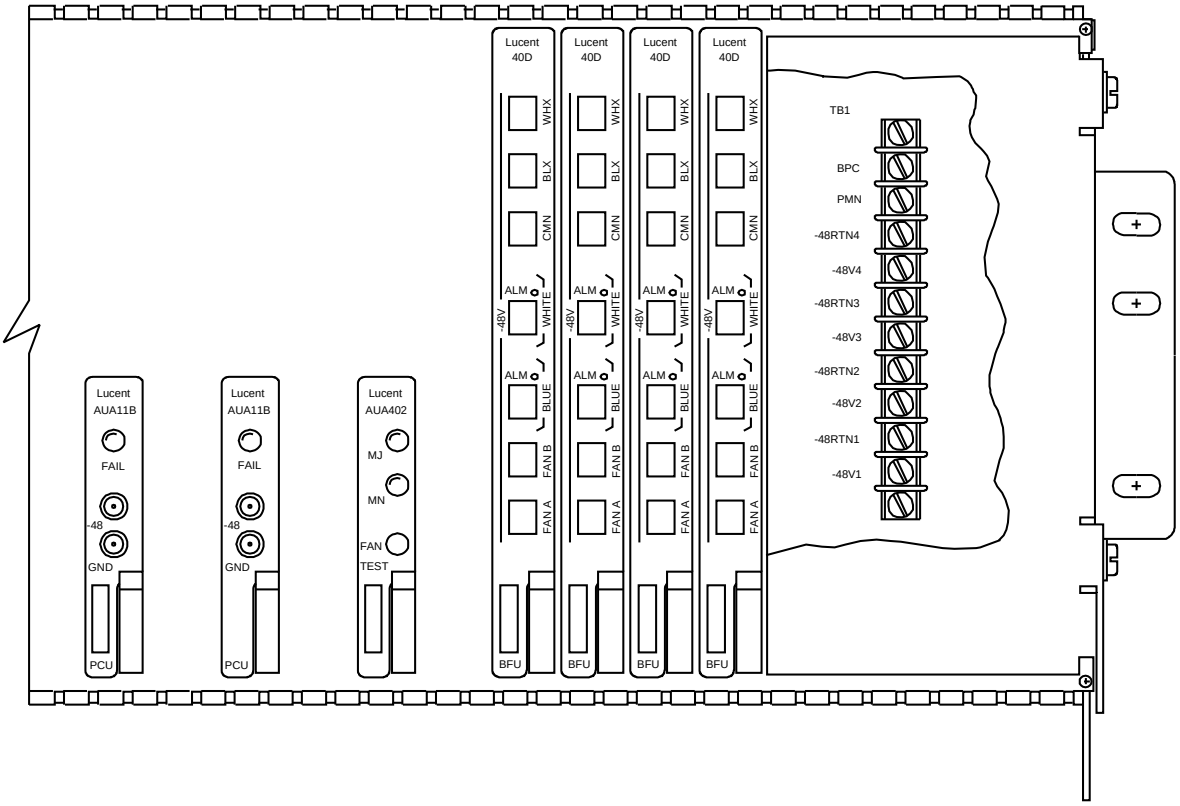


**Figure 1 – Location of TB1 on RT Optics Power Shelf**

16. Does DMM indicate between –42 and –56 volts?

    If **YES,** then proceed to Step **17.**
    If **NO,** then continue with Step **20.**

17. Has **PCU** been replaced?

    If **YES,** then proceed to Step **19.**
    If **NO,** then continue with Step **18.**

18. Replace **PCU** and repeat procedure from Step **3**.

19. Use SD-7C150-01 to check RT optics power shelf wiring between **TB1** and **BFU1/BFU2** and between **BFU1/BFU2** and the **PCU**. Repeat the procedure from Step **11** after locating and correcting the source of trouble.

20. Trouble in wiring between bulk power source and optics power shelf. Repeat the procedure from Step **11** after locating and correcting the wiring trouble.

21. Has voltage been checked at all **PCU**s?

    If **YES,** then proceed to Step **23.**
    If **NO,** then continue with Step **22.**

22. Go to next **PCU** and repeat procedure from Step **11**.

23. Disconnect DMM test leads.

    **STOP. YOU HAVE COMPLETED THIS PROCEDURE.**

# Install Alarm/Fan Control Unit (A/FCU) in Optics Power Shelf

1. **CAUTION:**
   *Fan operation is essential to prevent system failures in those Series 5 RTs engineered and installed with fans.*

   Get one **A/FCU** (**AUA402**) and inspect for possible damage.

2. Insert **A/FCU** into **A/FCU** slot in optics power shelf.

3. Press **FAN TEST** button on **A/FCU**.

   Response: All fans should operate while button is pressed.

4. Do all fans operate while **FAN TEST** button is pressed?

   If **YES,** then **STOP. YOU HAVE COMPLETED THIS PROCEDURE.**
   If **NO,** then continue with Step **5.**

5. Is –**48V FAN H** or –**48V FAN L** fuse on **BFU1** or **BFU2** blown?

   If **YES,** then continue with Step **6.**
   If **NO,** then proceed to Step **11.**

6. Replace blown fuse(s) on **BFU**.

7. Press **FAN TEST** button on **A/FCU**.

   Response: All fans should operate while button is pressed.

8. Do all fans operate while **FAN TEST** button is pressed?

   If **YES,** then **STOP. YOU HAVE COMPLETED THIS PROCEDURE.**
   If **NO,** then continue with Step **9.**

9. Does –**48V FAN H** or –**48V FAN L** fuse on **BFU** blow again?

   If **YES,** then continue with Step **10.**
   If **NO,** then proceed to Step **11.**

10. Check wiring using SD-7C118-02 and SD-7C150-01. Repeat procedure from Step **3** after locating and correcting trouble.

11. Replace **A/FCU**.

12. Press **FAN TEST** button on **A/FCU**.

    Response: All fans should operate while button is pressed.

13. Do all fans operate while **FAN TEST** button is pressed?

    If **YES,** then **STOP. YOU HAVE COMPLETED THIS PROCEDURE.**
    If **NO,** then continue with Step **14.**

14. Replace **A/FCU** with **A/FCU** removed previously.

15. Is **FAN ALARM** indicator on fan shelf lighted?

    If **YES,** then continue with Step **16.**
    If **NO,** then proceed to Step **17.**

16. Replace fan shelf and repeat from Step **3.**

17. Check wiring to fan shelf per SD-7C118-02 and SD-7C150-01. Repeat procedure from Step **3** after locating and correcting trouble.

# Install AYB1B Optical Units in Optical Shelf

1.

**NOTE:**
In order to determine how many optical units are required for a given optical shelf and where they will be located, it is necessary to know the type of channel units (**AUA400** or **AUA401**) that will installed in the Series 5 system shelf and where they will be located. The optical unit slots in each optical shelf correspond directly to identically numbered channel units slots in a Series 5 system shelf (48 slots - 96 channels). If an **AUA400 CU** (channel unit) is to be installed in one of the system shelf slots, an optical unit should be installed into the identically numbered slot in the optical shelf. If an **AUA401** CU is to be installed, it will occupy two CU slots and will have two corresponding optical unit slots in the optical shelf with only one optical unit required. Of the two optical unit slots associated with an **AUA401 CU**, the left (lower numbered) slot will be equipped with an optical unit thus leaving the right slot vacant.

Get required number of **AYB1B OU**s and inspect for physical damage.

2. Using a J99409OB, L1 OBMK (optical backplane maintenance kit), remove protective plug from backplane coupling in one of the optical shelf slots to receive the **AYB1B OU** as follows:

- Insert alignment card into slot of optical shelf and latch it into place.
- Insert plug removal rod into chuck of handle. Tighten chuck into handle.
- Insert handle/plug removal rod assembly into guide tube on alignment card until knob stops forward progress.

**NOTE:**
An attempt should not be made to withdraw handle/plug removal rod from guide tube while alignment card is latched in place. The protective plug being removed will not fit through guide tube.

- Simultaneously remove alignment card and handle/plug removal rod assembly.
- Remove protective plug from connector end of alignment card and store it in J99409OB case.
- Remove handle/plug removal rod assembly from alignment card.

3. Have protective plugs been removed from all couplings in optical shelf slots to be equipped with **AYB1B OU**s?

   If **YES,** then proceed to Step **5.**
   If **NO,** then continue with Step **4.**

4. Repeat Steps **2** and **3** for the next optical shelf slot to be equipped with an **AYB1B OU**.

5. Remove the plug removal rod from the handle and store it in the J99409OB case.

6. Using an OBMK, clean one of the optical shelf backplane couplings uncovered in Step **2** as follows:

   - Insert a swab into chuck of handle and tighten chuck into handle.
   - Insert handle, with swab into guide tube of alignment card.
   - Moisten the tip of swab by dipping it into alcohol (isopropyl reagent).
   - Remove excess alcohol with an alcohol moistened Kimwipe wiper or equivalent.
   - Insert alignment card into slot of optical shelf while keeping handle inside guide tube. Latch the alignment card into place.
   - Push handle into guide tube until knob of handle contacts guide tube.
   - Rotate knob of handle three turns clockwise then three turns counter-clockwise.
   - Remove handle with swab from guide tube.
   - Discard swab.
   - Assemble air tube over nozzle on can of compressed air.
   - Insert air tube with canned air into guide tube of alignment card until tube stops forward progress.
   - Using can of compressed air, blow three short blasts of air into coupling.
   - Remove air tube with canned air from guide tube.
   - Remove alignment card from slot.

7. Have all optical couplings been cleaned?

   If **YES,** then proceed to Step **9.**
   If **NO,** then continue with Step **8.**

8. Repeat Steps **6** and **7** for the next optical shelf slot to be equipped with an **AYB1B OU**.

9. Remove air tube from can of compressed air and store tube in J99409OB case.

10. Store alignment card and handle in J99409OB case.

11. Remove protective cover from optical connector on each **AYB1B OU**.

12. Clean optical connector on each **AYB1B OU** using a Kimwipe wiper moistened with alcohol. Dry the optical connector using compressed air.

13. Install each **AYB1B OU** into the prepared slots in the optical shelf.

    **STOP. YOU HAVE COMPLETED THIS PROCEDURE.**

# Check 197A Battery Load Test Set for Proper Operation

1. Obtain **197A BATTERY LOAD TEST SET** (Figure 1).

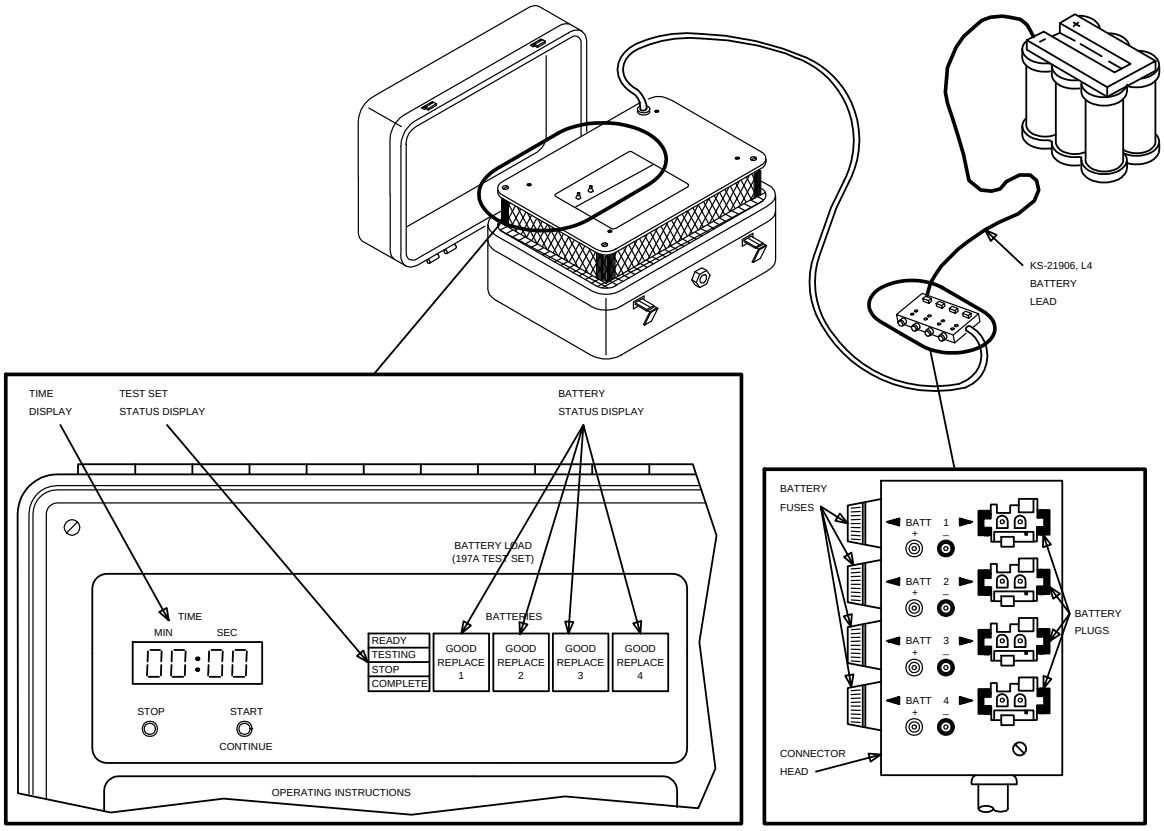


**Figure 1 – 197A Battery Load Test Set Arrangement**

2. Remove cover from test set.

3. At test connector head, verify battery fuse holders each contain a 20-Amp fast-blow fuse.

4. Obtain one KS-21906, L4 battery.

5. 

   **NOTE:**
   Under normal conditions, when the first battery is connected, the following occurs: (a) Test set **TIME** display indicates **00 MIN: 00 SEC**; (b) Status display indicates which test set **BATT** plug that battery is connected to, status of the battery (**GOOD** or **REPLACE**), and the **READY** indicator lights; (c) Test set fan operates.

   At test set connector head, connect battery lead to **BATT 1, 2, 3**, or **4** plug being tested.

6. 

   **CAUTION:**
   *Damage will occur if test set is operated without fan operating.*

   Does test set fan operate?

   If **YES,** then proceed to Step **15.**
   If **NO,** then continue with Step **7.**

7. Connect battery lead to remaining **BATT** plugs, one at a time, and note if fan operates.

8. Did test set fan operate for any **BATT** plug connection?

   If **YES,** then proceed to Step **11.**
   If **NO,** then continue with Step **9.**

9. 

   **NOTE:**
   The test set is intended to test fully charged batteries. Before new batteries or replacement batteries are tested, a minimum of two days must have passed between the time the batteries are put on high rate charge and this test is made.

   Disconnect lead. Using a different battery pack, connect battery lead to any **BATT** plug.

10. Does test set fan operate?

    If **YES,** then proceed to Step **15.**
    If **NO,** then proceed to Step **35.**

11. On test set connector head, remove battery lead and check for blown fuse(s).

12. Is fuse(s) blown?

    If **YES,** then continue with Step **13.**
    If **NO,** then proceed to Step **14.**

13. Replace fuse(s) and repeat from Step **5.**

14.

    **NOTE:**
    Test set may be used for testing using one, two, three or all four **BATT** plug positions.

    Defective test set or connector head. Note defective **BATT** plug position(s). Continue with test procedures using remaining **BATT** plugs.

15. Does test set **TIME** display indicate **00 MIN:00 SEC** without blinking?

    If **YES,** then continue with Step **16.**
    If **NO,** then proceed to Step **35.**

16. Does status display indicate which battery was connected, status (**GOOD** or **REPLACE**) of the battery, and is **READY** indicator lighted?

    If **YES,** then continue with Step **17.**
    If **NO,** then proceed to Step **35.**

17. Does status display indicate **GOOD** or **REPLACE**?

    If **YES,** then proceed to Step **19.**
    If **NO,** then continue with Step **18.**

18.

**DANGER:**
*A high discharge current is present at connector head if TESTING indicator is lighted. Batteries must not be connected or disconnected when TESTING indicator is lighted.*

Battery pack is defective. Ensure that **TESTING** indicator is not lighted (**READY** indicator lighted), unplug and set aside defective battery pack, and repeat from Step **5.**

19. Have **TIME** display and **STATUS** indicators been tested for each good **BATT** plug position?

    If **YES,** then proceed to Step **21.**
    If **NO,** then continue with Step **20.**

20.

**DANGER:**
*A high discharge current is present at connector head if TESTING indicator is lighted. Batteries must not be connected or disconnected when TESTING indicator is lighted.*

Ensure that **TESTING** indicator is not lighted (**READY** indicator lighted). Unplug battery pack and repeat from Step **5.**

21.

**DANGER:**
*A high discharge current is present at connector head if TESTING indicator is lighted. Batteries must not be connected or disconnected when TESTING indicator is lighted.*

Depress test set **START/CONTINUE** button.

22. Does test set **TESTING** indicator light, **READY** indicator go off, and **TIME** display start counting time?

    If **YES,** then proceed to Step **24.**
    If **NO,** then continue with Step **23.**

23.

**DANGER:**
*A high discharge current is present at connector head if TESTING indicator is lighted. Batteries must not be connected or disconnected when TESTING indicator is lighted.*

Defective test set. Depress **STOP** button, unplug battery. Return test set for repair.

24. Depress test set **STOP** button.

25. Does test set **STOP** indicator light and **TIME** display stop counting time?

    If **YES,** then proceed to Step **27.**
    If **NO,** then continue with Step **26.**

26.

**DANGER:**
*A high discharge current is present at connector head if TESTING indicator is lighted. Batteries must not be connected or disconnected when TESTING indicator is lighted.*

Defective test set. Allow test to run for 15 minutes as shown on **TIME** display. When **COMPLETE** indicator lights, unplug battery. Return test set for repair.

27.

**DANGER:**
*A high discharge current is present at connector head if TESTING indicator is lighted. Batteries must not be connected or disconnected when TESTING indicator is lighted.*

Depress test set **START/CONTINUE** button.

28. Does test set **TESTING** indicator light, **STOP** indicator go off, and **TIME** display start counting time?

    If **YES,** then continue with Step **29.**
    If **NO,** then proceed to Step **34.**

29. Allow test set to run for 15 minutes as shown on **TIME** display.

30. During 15-minute test period, does test set show **REPLACE**?

    If **YES,** then continue with Step **31.**
    If **NO,** then proceed to Step **32.**

31. Note that battery being used is defective.

32. After 15 minutes, does **COMPLETE** indicator light?

    If **YES,** then continue with Step **33.**
    If **NO,** then proceed to Step **34.**

33. Unplug battery. Store connector head in test set cover. Reinstall cover.

    **STOP. YOU HAVE COMPLETED THIS PROCEDURE.**

34. ⚠ **DANGER:**
    *A high discharge current is present at connector head if TESTING indicator is lighted. Batteries must not be connected or disconnected when TESTING indicator is lighted.*

    Defective test set. Depress **STOP** button, unplug battery. Return test set for repair.

35. Defective test set. Return for repair.

    **STOP. YOU HAVE COMPLETED THIS PROCEDURE.**

# Install Lineage 2000 VR Series Batteries in 80D Cabinet Battery Compartment

**SUMMARY:** Unpack and visually inspect the batteries for damage. Measure the voltage of each battery. Requirement: 4.20 V DC or higher. Place batteries in the battery compartment (Figure 1). Coat inter-battery bus bars with NO-OXid grease. Connect the batteries together with the bus bar as shown in Figure 2. Connect battery string cable to batteries 1 and 12. Check the battery string voltage, note polarity and voltage (Requirement: minimum 50.4 V DC). Connect cable from control & distribution panel to battery string cable. Repeat for each battery string to be installed.

1.

**DANGER:**
*Batteries are electrically live at all times and are able to supply several thousand amperes short circuit current. Great care should be exercised to avoid short circuiting the battery terminals. Insulated tools must be used; any rings, watches, bracelets, etc. must be removed when working on batteries.*

**DANGER:**
*Any contact of electrolyte with skin or clothing should be avoided. If contact occurs, the electrolyte can be neutralized by flushing with plenty of water. If electrolyte enters the eye, immediately flush the eye with water and seek medical help. If the batteries appear damaged in shipping, protective rubber apron, rubber gloves and goggles should be worn by persons handling the batteries.*

**CAUTION:**
*The Lineage 2000 VR Series battery is valve regulated, starved electrolyte lead acid cell. Should the case crack, it is possible that small amount of electrolyte (one ounce) could leak out. The electrolyte is sulfuric acid and should be handled as highly corrosive material. No battery installation should be attempted unless the installer has ready access to several gallons of water and a package of baking soda. Baking soda or solution of baking soda and water may be used to neutralize small amounts of electrolyte.*

2. Get equipment for installation:

   - (1) ED-83242-30, G3 which consists of 12 Lineage 2000 VR series batteries, 11 inter-battery bus bars, 24 1/4-inch lock washers, 24 1/4-inch nuts, a container of the NO-OXid grease and a form 1285 (all these items are supplied with the batteries).

     Comment: Battery string 3 requires a cable between batteries 6 and 7. This cable is used to replace inter-battery bus bar for the split battery string 3.

   - (1) battery string cable (comcode 846278224, one for each battery string) (shipped with the cabinet as Group 63).
   - torque wrench (range between 30 inch lb. and 200 inch lb.) with insulated handle (or insulate the handle with electrical tape).
   - 7/16-inch socket (for the 1/4-20 nut).

3. Unpack the batteries and inspect for physical damage. Do not install any cell that appears to be damaged. Any cell that has leaked electrolyte should be considered defective.

4. Condition DMM to measure DC volts.

5. Measure the terminal voltage of each battery. Does meter indicate 4.20 V DC or higher for each battery?

   If **YES**, then proceed to Step **6.**
   If **NO**, then continue with Step **5.**

6. Replace any battery that measures less than 4.20 V DC.

7. Wipe battery terminals until clean and dry.

8. Use special hex key (modified hex key) and 216-tool to open the battery compartment doors.

9. Place all twelve batteries in the battery compartment as shown in Figure 1.

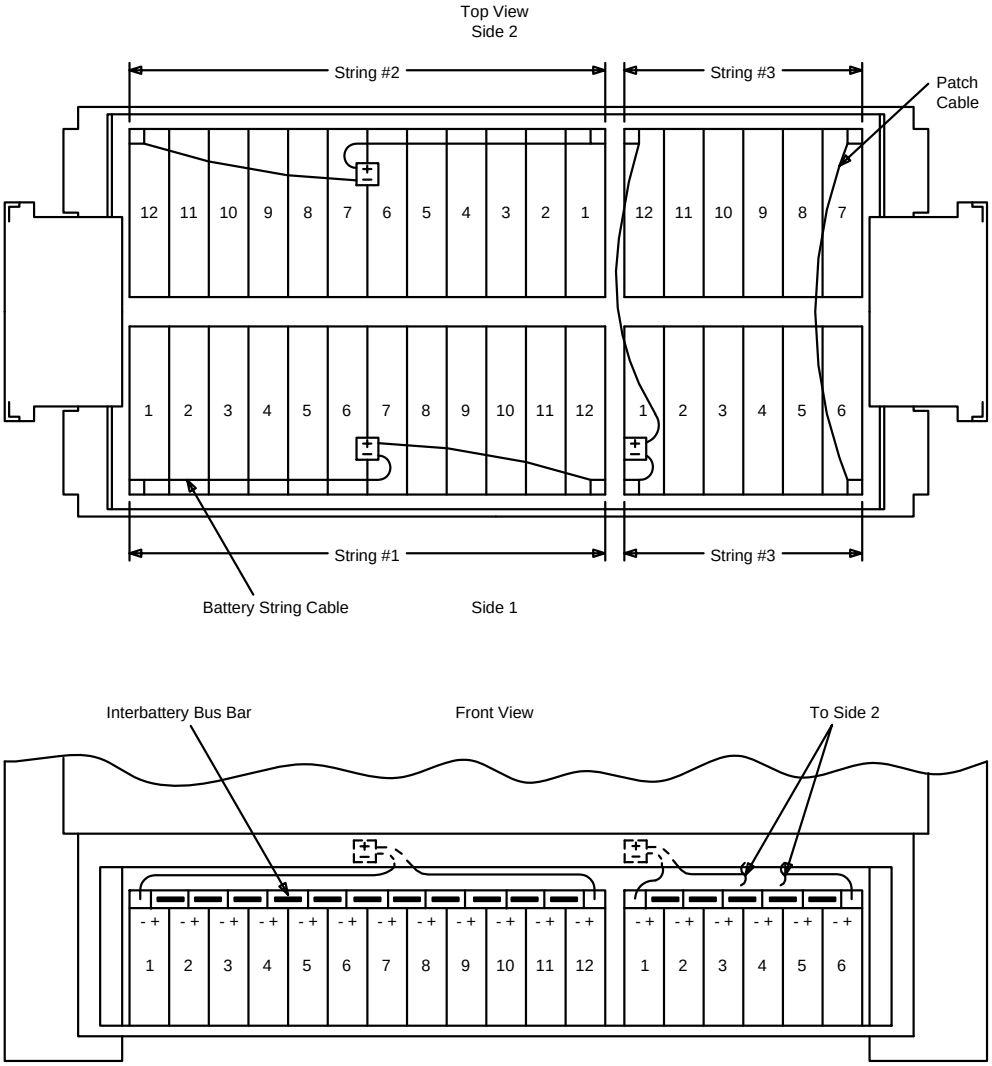


**Figure 1 – Layout of Lineage 2000 VR Series Batteries in 80D Cabinet**

10. Coat inter-battery bus bars with NO-OXid grease and install on the batteries as shown in Figure 2. Install 1/4 inch lock washer and nut on battery post. Using insulated torque wrench with the socket, tighten nut to 55 in-lbs torque. Repeat for each battery post until all 12 batteries are connected together.

    Comment: For battery string 3 the 12 batteries are connected in 2 groups of 6 batteries. A cable connects **+** of battery 6 to **-** of battery 7 using the hardware to connect the inter-battery bus bar.

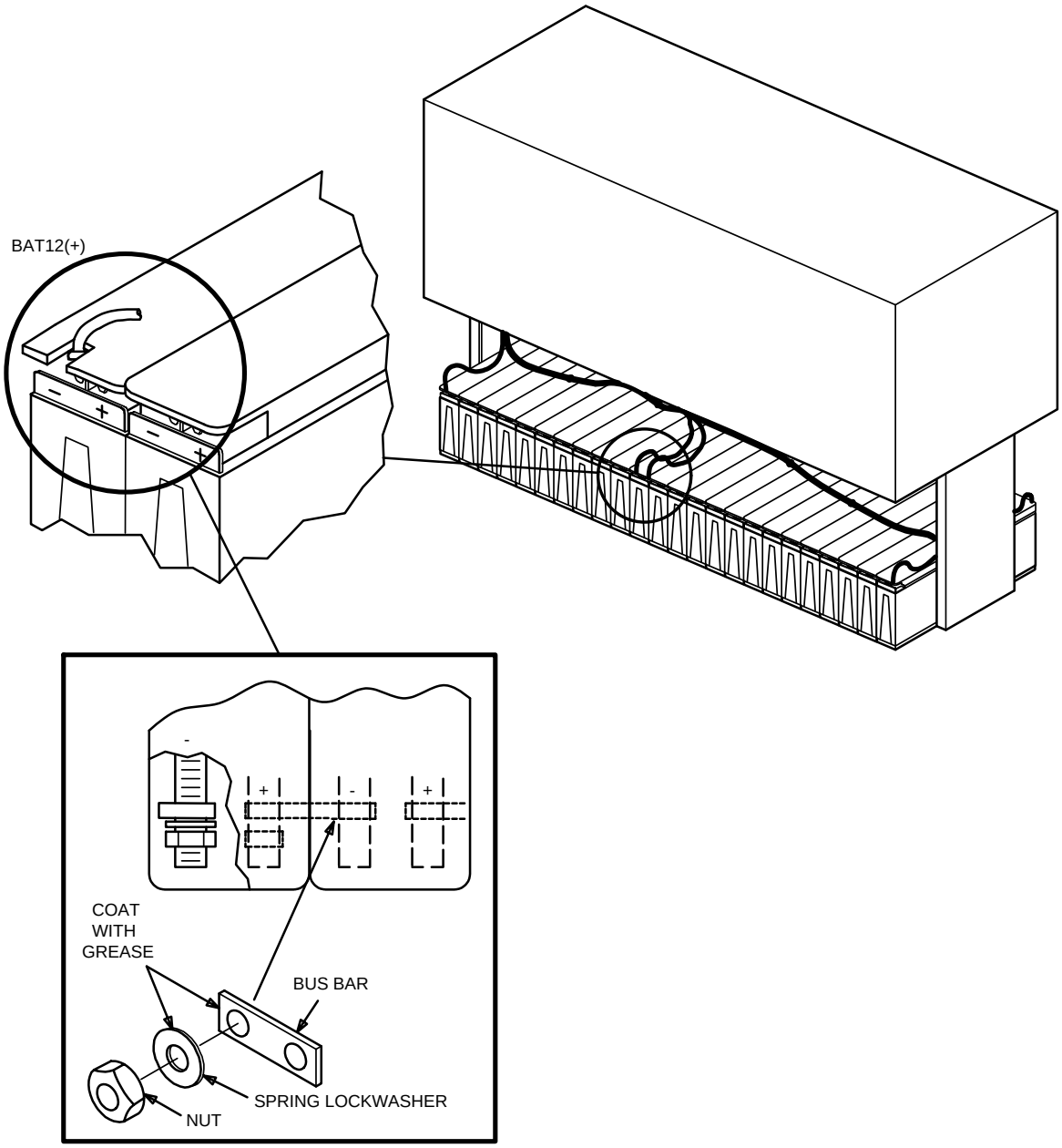


**Figure 2 – Battery String Connections for Lineage 2000 VR Series Batteries**

11. Cut a notch in the cover of the battery No. 1 (above "–" battery post) and battery No. 12 (above "**+**" battery post) (see Figure 2). This is required to install the battery string cable.

12. Connect the battery string cable to battery No. 1 by terminating the lug marked **BAT 1 (–)** to the "–" (negative) battery post of the first battery in the string (Figure 2). Connect the battery string cable to battery No. 12 by terminating the lug marked **BAT 12 (+)** to the "**+**" (positive) battery post of the 12th battery as shown in Figure 2. Install the lock washer and nut on the battery posts. Use insulated torque wrench to tighten the nuts to 55 in-lbs torque.

13. Coat each battery connection with NO-OXid grease.

14. Condition DMM to measure DC volts. Measure battery string voltage at the connector (marked **STR** "**+**" and "–") at the end of the battery string cable. Make sure measured polarity corresponds with polarity indicated on connector.

15. Does meter indicate battery string voltage between –50.4 V DC and –51.4 V DC?

    If **YES**, then proceed to Step **16.**
    If **NO**, then continue with Step **15.**

16. Make sure that there are twelve batteries in the string. Recheck battery connections and correct if necessary. If connections are correct, check individual battery voltage. Any battery that indicates less than 4.20 V DC should be replaced.

17. ⚠ **DANGER:**
    *After the connector from the control & distribution panel is mated with the connector from the battery string cable, the power bus on the control & distribution panel will be "live" (that is, have voltage on it).*

    Connect the battery string cable **STR** connector to the connector designated **STR( )** (1, 2 or 3) on the end of the battery cable located in the battery compartment.

18. Dress cables in the battery compartment.

19.

**NOTE:**
To measure the battery string voltage accurately, disconnect any battery strings other than battery string being measured. [To disconnect other battery strings, unplug the battery string cable connector marked **STR** from the battery cable connector marked **STR( )**.]

On control & distribution panel, connect DMM to **BAT( )** (1, 2 or 3) test point and **PVR** test point for battery string being installed.

20. Does meter indicate battery string voltage of 50.4 V DC or higher?

    If **YES**, then proceed to Step **21.**
    If **NO**, then continue with Step **20.**

21. Visually inspect cable assembly between control & distribution panel and battery string. Replace cable assembly fuse and/or cable assembly until meter indicates correct voltage.

22. Is this the last battery string to be installed?

    If **YES**, then proceed to Step **22.**
    If **NO**, then repeat from Step **1** for next battery string to be installed.

23. Disconnect test equipment. Reconnect any battery strings disconnected for voltage measurement. Close and lock battery compartment door.

24. Between one and three hours after the rectifiers are installed, measure the voltage of each battery in the string and record on form 1285 supplied with the batteries. Meter should indicate between 4.44 V DC and 4.64 V DC for each battery. Any battery outside this limit should be measured again within one week. If it is still outside the limit, replace battery.

**STOP. YOU HAVE COMPLETED THIS PROCEDURE.**

# Install *Chloride* Batteries in 80D Cabinet Battery Compartment

**SUMMARY:** Inspect *Chloride* 3VB11 batteries for damage. Measure battery voltage (Requirement: minimum 6.2 V DC). Remove covers and connect cable assemblies to batteries. Replace covers. Put batteries in position and connect batteries together. Connect battery string cable to batteries **1** and **8**. Check battery string voltage (requirement: minimum 49.5 V DC). Connect cable from control & distribution panel to battery string cable. Repeat for each battery string to be installed.

1.

**DANGER:**
*Batteries are electrically live at all times and are capable of supplying high short circuit currents. Each battery comes with a plastic cover. Do not remove the cover until access to the terminals is required.*

**CAUTION:**
*Batteries should be handled carefully; the plastic container can be damaged if dropped. Never lift batteries by holding terminal posts.*

Get eight *Chloride* 3VB11 (COMCODE 405890336) batteries [Figure 1] and hardware (but discard connecting straps). Get cable assemblies (shipped with cabinet as Group 62) for connecting batteries:

8 — *Chloride* battery cable assemblies (COMCODE 846279149) [includes positive battery cable **BAT (+),** negative battery cable **BAT (–),** and cable separator]

1 — patch cord **JMP(+)/JMP(–)** (COMCODE 846279107)

1 — battery string cable **STR1/BAT1(+)/BAT8(–)** (COMCODE 846279115).

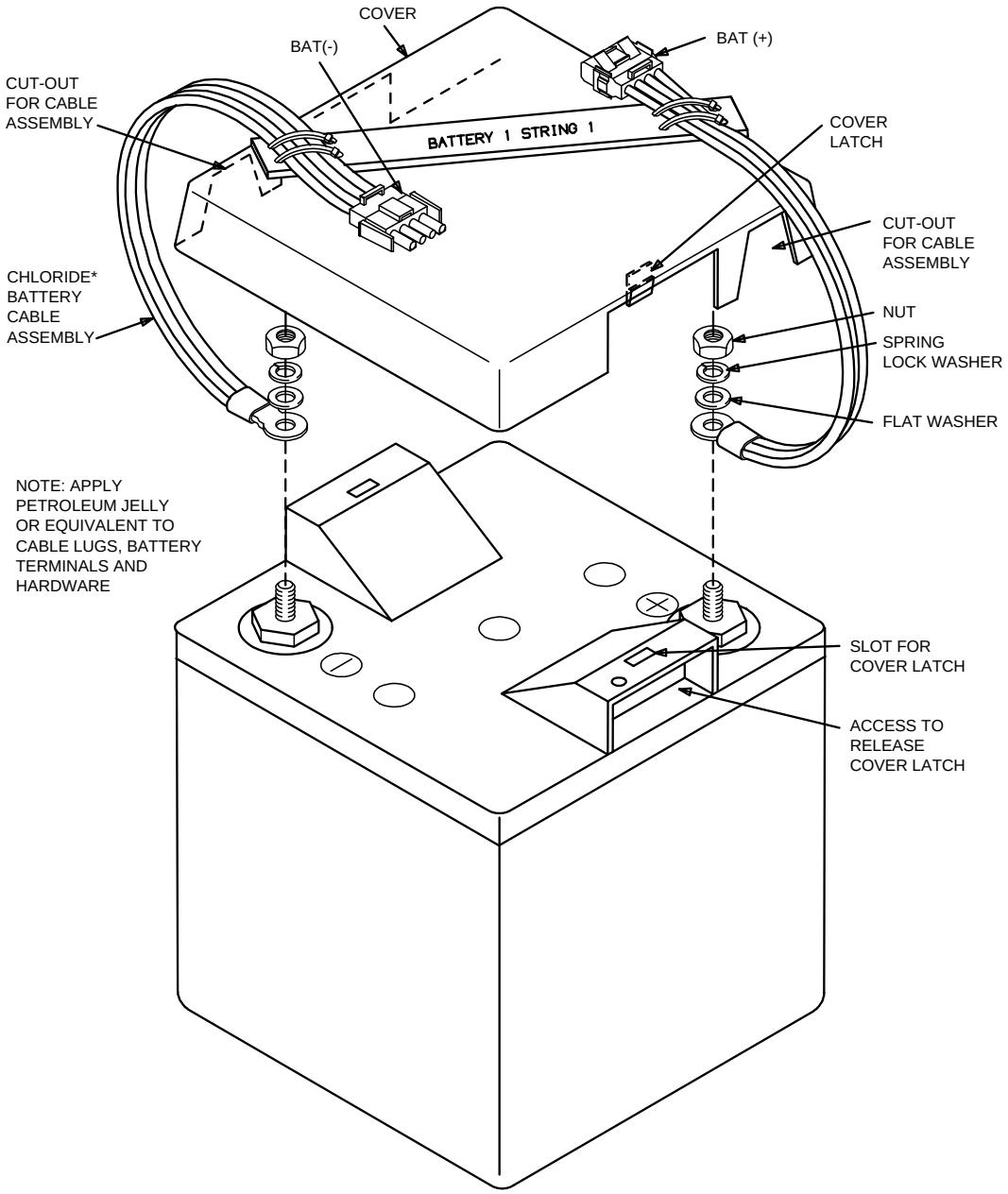


**Figure 1 – Detail of Chloride Batteries and Cable Assembly**

2. Visually inspect batteries for cracks, leakage, or other damage. Inspect cable assemblies for damage. Replace batteries or cables that appear damaged or defective.

3. Condition DMM to measure DC volts.

4. Measure terminal voltage of each battery. Does meter indicate 6.2 V DC or higher for each battery?

   If **YES,** then proceed to Step **6.**
   If **NO,** then continue with Step **5.**

5. Replace any battery that measures less than 6.2 V DC.

6. ⚠ **DANGER:**
   *Insulated tools must be used, and any rings, watches, bracelets, etc. must be removed when working on batteries.*

   ⚠ **CAUTION:**
   *Do not loosen large hexagonal nut at bottom of each terminal. Doing so will release terminal seal and may cause permanent damage to battery.*

   ⚠ **CAUTION:**
   *Battery covers have 2 latches, one on each side (in the handle) of the battery, accessed through battery handle opening. These latches must be depressed to remove cover, otherwise latches will break.*

   Remove battery covers and retain for fitting after battery cables are terminated. With permanent marker, mark each cable separator label with battery string identification.

7. Wipe battery terminals until clean and dry.

8.

**CAUTION:**
*For proper connection, make sure flat side of cable lug is installed **first** on battery post!*

On cable assembly [Figure 1], connect **BAT (+)** cable to **+** (positive) terminal of battery by installing cable lug, flat washer, spring lock washer, and nut on battery post. **Use only open-end wrench supplied with battery to tighten nut** (which prevents over-tightening). If no wrench is supplied, torque wrench may be used to tighten nut (8mm) to recommended fastening torque value of 4 ft-lbs (48 in-lbs). Do not overtighten.

9. On cable assembly [Figure 1], connect **BAT (–)** cable to – (negative) terminal of battery by installing cable lug, plain washer, spring lock washer, and nut on battery post. **Use only open-end wrench supplied with battery to tighten nut** (which prevents over-tightening). If no wrench is supplied, torque wrench may be used to tighten nut (8mm) to recommended fastening torque value of 4 ft-lbs (48 in-lbs). Do not overtighten.

10. Double check connections to make sure they are correct.

11. Apply petroleum jelly or equivalent on terminal connections as needed to prevent corrosion.

12. Install plastic cover (removed in Step **6**) on battery. Remove cut-outs in side wall of cover [Figure 1] as needed to fit over cable assembly.

13. Repeat from Step **7** for remaining batteries in battery string.

14. Use special key (modified hex key) and 216-tool to open doors to battery compartment (in cabinet skirt).

15.

**NOTE:**
Connectors are "keyed" and must be properly oriented to be connected.

**NOTE:**
Batteries are counted clock wise from the left row (battery 1) around to the right front (battery 8). Battery string 2 is rotated 180° with respect to battery stings 1 and 3.

16. As shown in Figure 2, place the left 4 batteries (batteries **1** through **4** with cable assemblies) in battery compartment in position for battery string 1. Ensure the first and fourth batteries are 1 inch away from the battery compartment doors.

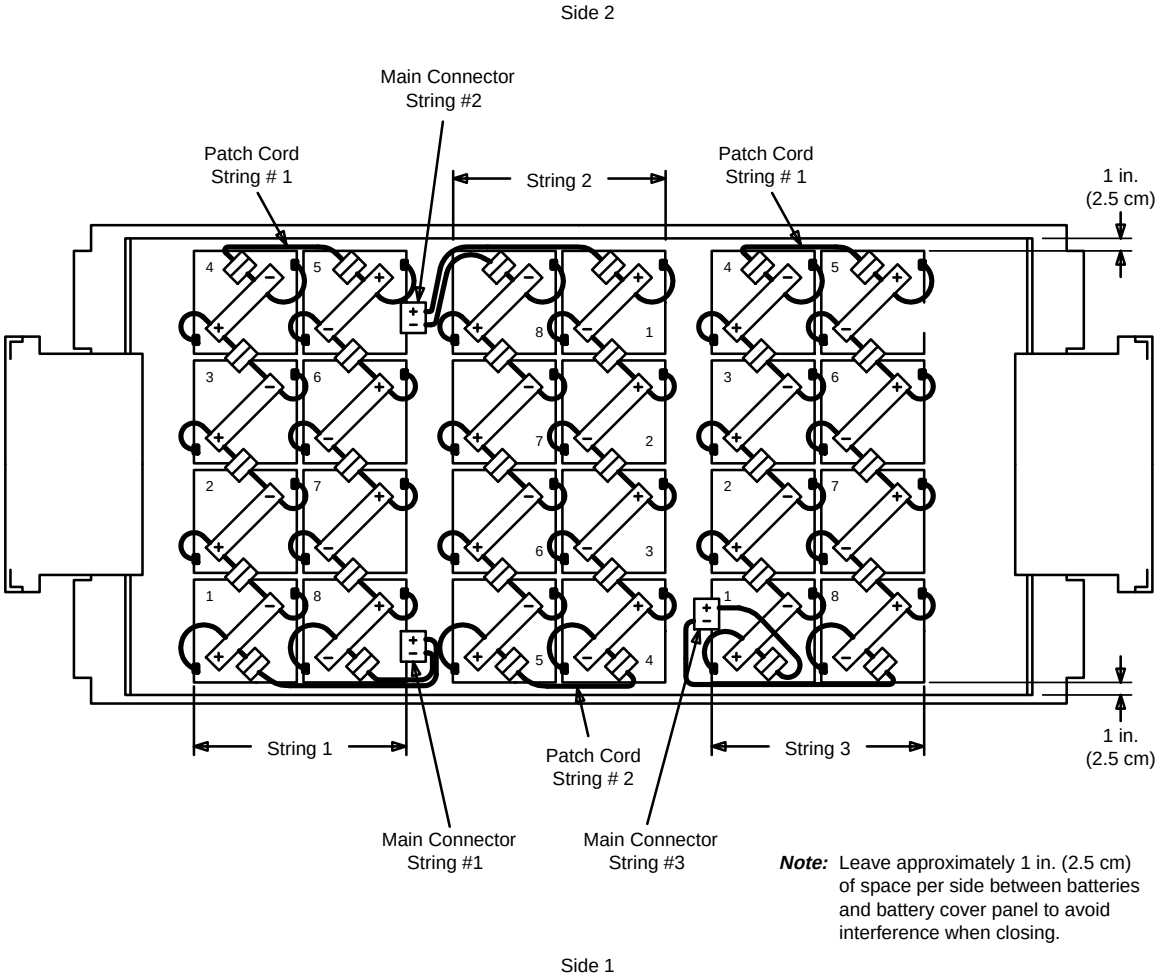


***Note:*** Leave approximately 1 in. (2.5 cm) of space per side between batteries and battery cover panel to avoid interference when closing.

**Figure 2 – RT Battery Strings and Connections**

17.

**DANGER:**
*When connecting batteries together, be careful **not** to connect together the positive and negative terminals of the **same** battery.*

Connect batteries **1** through **4** together by plugging **BAT (–)** connector from one battery into **BAT (+)** connector from next battery [Figure 2].

18. Place the right 4 batteries (batteries **5** through **8** with cable assemblies) for battery string 1 (rotated 180° with respect to the first four batteries). Ensure the fifth and eighth batteries are 1 inch away from the battery compartment doors.

19. Connect patch cord [Figure 2] to **BAT (–)** connector of of battery **4**. Connect other end of patch cord [Figure 2] to **BAT (+)** of battery **5**.

20.

**DANGER:**
*When connecting batteries together, be careful **not** to connect together the positive and negative terminals of the **same** battery.*

Connect batteries **5** through **8** together by plugging **BAT (–)** connector from one battery into **BAT (+)** connector from next battery [Figure 2].

21. Connect battery string cable to battery string: plug **BAT1 (+)** (female) connector to **BAT (+)** connector from battery **1** and **BAT8 (–)** (male) connector to **BAT (–)** connector from battery **8**.

22. Condition DMM to measure DC volts. Measure battery string voltage at gray **STR( )** connector (across clips) of battery string cable.

23. Does meter indicate battery string voltage of 49.5 V DC (absolute) or higher?

    If **YES,** then proceed to Step **25.**
    If **NO,** then continue with Step **24.**

24. Recheck battery connections for proper (positive to negative) sequence. Correct if necessary. If connections are correct, check individual battery voltage (can be measured through cover). Any battery that indicates less than 6.2 V DC should be replaced. If all batteries indicate less than 6.2 V DC, refresher charge may be necessary. Refer to manufacturer's instructions for refresher charge operation.

25.

**DANGER:**
*After connectors are mated, power bus will be "live" (i.e., have voltage on it).*

Connect together gray connectors on **STR( )** (1, 2, or 3) battery string cable and **STR( )** (1, 2, or 3) cable from control & distribution panel.

26. Dress and secure cables to the top of the battery compartment as necessary to keep them above batteries (in case of flood).

27.

**NOTE:**
To measure battery string voltage accurately, disconnect any battery strings other than battery string being measured. [To disconnect other battery strings, unplug **STR( )** battery string cable connector (gray) from **STR( )** battery cable connector (gray) from control & distribution panel.]

On control & distribution panel [Figure 3], connect DMM to **BAT( )** (1, 2, or 3) test point and **PVR** test point for battery string being installed.

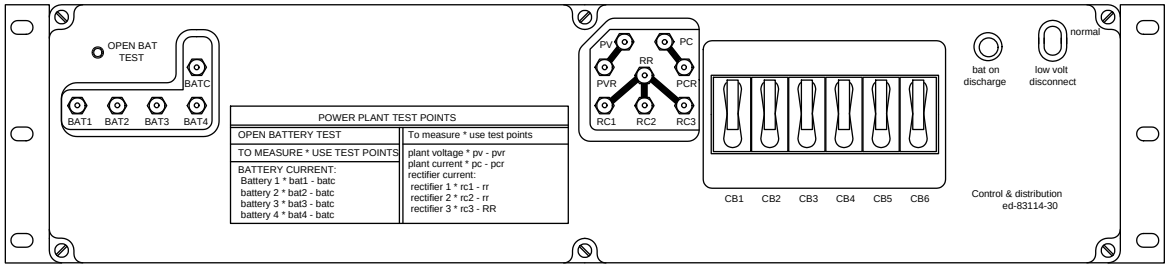


**Figure 3 – Control & Distribution Panel**

28. Does meter indicate battery string voltage of 49.5 V DC or higher?

If **YES,** then proceed to Step **30.**
If **NO,** then continue with Step **29.**

29. Visually inspect cable assembly between control & distribution panel and battery string. Replace cable assembly fuse and/or cable assembly until meter indicates correct voltage.

30. Is this the last battery string to be installed?

    If **YES,** then proceed to Step **31.**
    If **NO,** then repeat from Step **1** for next battery string.

31. Reconnect any battery strings disconnected for battery string voltage measurement. Close and secure doors to battery compartment.

    **STOP. YOU HAVE COMPLETED THIS PROCEDURE.**

# Check 4A or 4B Fan Unit Operation

**Summary:** The 4A and 4B fan units are identical except for the air flow direction from the shelf. The 4A or 4B has a built-in controller circuit pack. The 4A or 4B fans will start running at +10°C (+50°F) and run at 2 speeds depending on temperature (3600 RMP above 40•C, 3200 RMP below 40°C) and a third speed (2800 RPM) if the *SLC###*V-Rg-V###-2000 remote terminal (RT) is on batteries. The 4A or 4B fans will begin to operate when the power shelf is equipped and the power shelf circuit breakers are turned on. To check the 4A or 4B fans press the **CHANGE FAN SPEED** button at least 3 times to verify high, medium, and shut off speeds. The **CHANGE FAN SPEED** button also functions as an LED TEST for the 4A or 4B fan **FAULT** indicator.

1. Verify that the power equipment has been turned up and batteries have been installed. Verify that the power equipment DC circuit breakers are turned on. The **CHANGE FAN SPEED** button on the fan unit *should not have been pressed in the last 10 minutes* to perform this procedure.

2. 

   **NOTE:**
   The fans will start operating if the temperature is +10°C (+50°F) or higher and if power is supplied. The fans will not turn off until the temperature is -10°C (+14°F) or less. The 4A or 4B provides **TEMP** voltage test jacks that can be used to determine the temperature of the fan controller (1 volt DC per 10°C above 0°C).

   If the 4A or 4B **FAULT** indicator is on (see Figure 1), proceed to Step **6**.

3. Press and hold down the **CHANGE FAN SPEED** button and verify that the **FAULT** indicator lights. Press and release the **CHANGE FAN SPEED** button at least 3 times and verify that the fans run at high speed, medium speed, and then off. Leave the fans in the off mode.

4. Did the fans step through 3 speeds and did the **FAULT** indicator light for the **CHANGE FAN SPEED** test?

   If **YES, THEN STOP. YOU HAVE COMPLETED THIS PROCEDURE.**
   If **NO**, then continue with Step **5**.

5. If **FAULT** indicator did not light and/or the fans did not operate, check

**P114/J114** connection and verify that the power equipment DC circuit breaker is not tripped. Refer to appropriate SD drawings to clear power trouble. Replace the control circuit pack in the 4A or 4B fan unit if no power troubles are found. Then repeat this procedure.

6. When the **FAULT** indicator is lighted, look through the front grille at the control circuit pack.

   - If the control circuit pack YELLOW indicator is lighted and the GREEN LED is flashing, the thermal sensor may have failed. Check the voltage between **TEMP +** and – jacks (1 volt DC per 10°C above 0°C). If the voltage indicates a temperature close to the ambient air, unplug and reconnect **P114/J114** connector. If the voltage indicates a temperature obviously too high or too low, replace the control circuit pack in the 4A or 4B fan unit.

     The thermal sensor alarm (YELLOW LED) will light if a temperature change of more than 2.7°C has not occurred in the past three days. To clear this alarm reconnect the **P114/J114** connector. To test the sensor check the voltage between **TEMP +** and – jacks while blocking air flow from the fan unit. The voltage will rise if the sensor is functional.

   - If the GREEN indicator is flashing and the RED and YELLOW indicators are off, one or both fans is obstructed or defective (for example, rotates at less than 2000 RPM). Clear obstruction and/or replace defective fan.

   - With the **FAULT** LED lighted and any other combination of control circuit packs indicators, replace the control circuit pack in the 4A or 4B fan unit.

7. Repeat this procedure after correcting trouble.

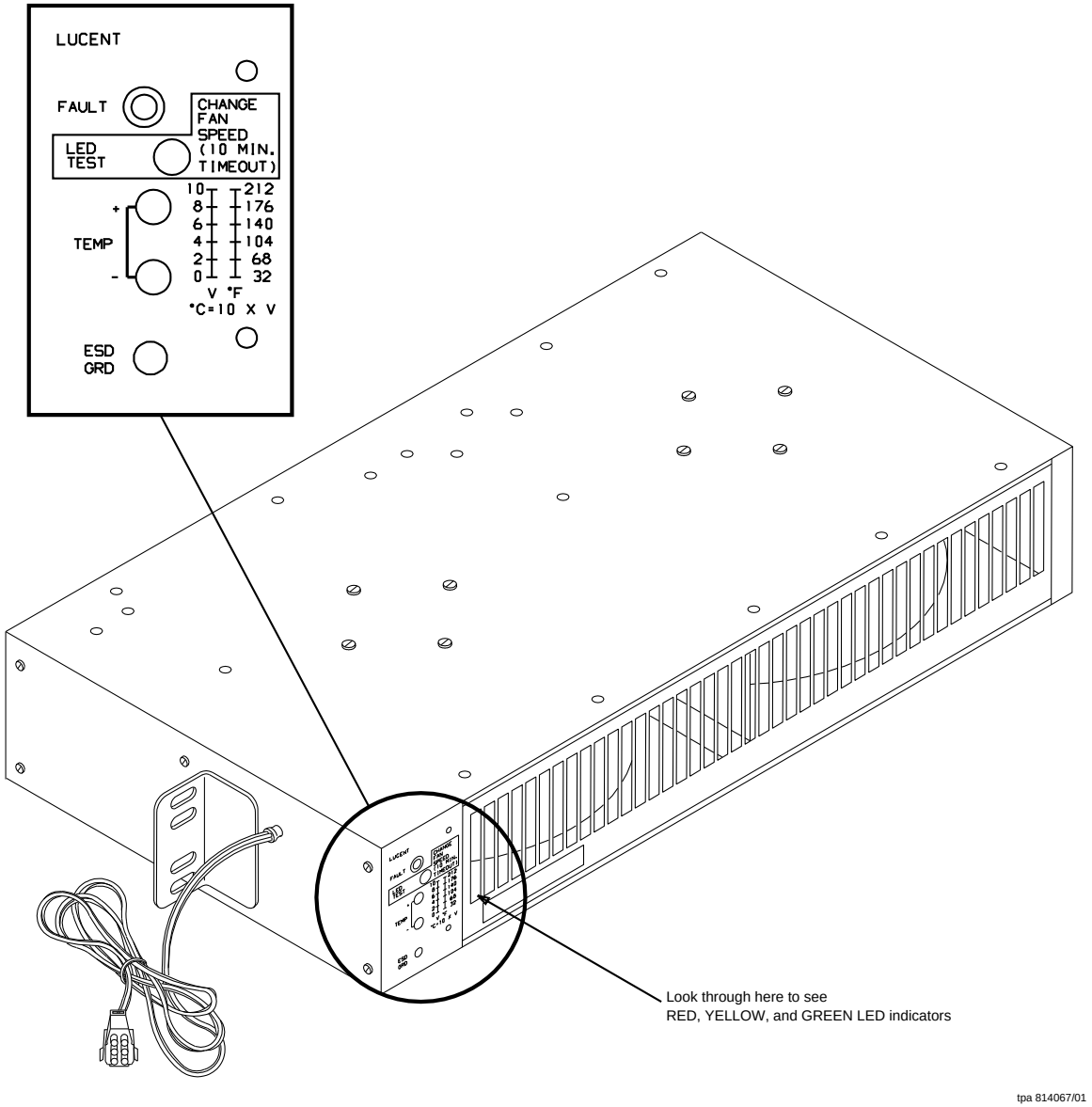


**Figure 1 – 4A or 4B Fan Unit and Control Circuit Pack**

# Turn Up Series 5 RT Channel Bank

## Introduction

This Tab provides procedures to equip and turn up the blue, white, or both systems of the *SLC*® Series 5 carrier system remote terminal (RT) dual channel bank assembly. The procedures include installation of common circuit packs optioned for preservice. These procedures assume the *Acceptance Tab procedures* have been done, and the *Power Up Tab procedures* have been done to turn up the power plant and ringing generators.

This Tab also provides procedures to add digroups CD to an in-service system. When adding digroups CD to a system, you may have MN (minor) and NE/FE (near end/far end) alarms until both CO and RT ends of the system have been equipped and optioned for digroups CD.

### Feature Packages

The *SLC* Series 5 carrier system offers a variety of system configurations offering POTS only, special services, concentration, and integration. These configurations are called feature packages. The feature package is selected by the choice of bank control unit (BCU), alarm display unit (ADU), and option settings on the ADU. The choice of supporting common units [transmit/receive unit (TRU), line interface unit (LIU), channel test unit (CTU), digital test unit (DTU), line switch unit (LSU), and transcoder unit (TCU)] is determined by the feature package configuration.

Fiber to the Home (FTTH) arrangements are supported by Feature Package B (FPB) with the MC97771A1 or MC97776A1 BCU, Feature Package C (FPC), or FPC-AutoCut central office terminal (COT) and RT configurations with J1C182AE RT channel bank. The Multi-Services Distant Terminal (*SLC*®-2000 MSDT) is supported by Feature Package F (FPF) using the MC97779A1 BCU, and provides the same service capabilities FPC. The procedures to equip the FTTH DT equipment are found in the *DT Turn Up Tab*. Procedures to equip the MSDT equipment is found in 363-205-004.

These procedures assume the feature package configuration is known before circuit packs are installed.

# RT Channel Bank Turn Up
# Task Index List

## FIND YOUR JOB IN THE LIST BELOW . . . . . THEN GO TO

**NOTE:**
When establishing a *SLC*® Series 5 Carrier System remote terminal (RT) you must initially accept the RT equipment as directed in the Acceptance Tab procedures. Then you must Turn Up the RT frame/cabinet supporting equipment so that power is established using procedures in the Power Up Tab. After the RT power (rectifiers, batteries, and ringing) has been established, the channel bank can be Turned Up for the required Feature Package configuration.

For craft personnel familiar with *SLC*® Series 5 Carrier System RT Turn up procedures, the quick reference cards (Appendix B for option settings and Appendix C for RT Turn Up) may be used for abbreviated Turn Up procedures.

Acceptance . . . . . NTP-002
Turn Up Series 5 RT Blue or White System Equipped for Any Feature Package Except FP 303 . . . . . NTP-003
Add Digroups C and D to Existing RT for Any Feature Package Except 303 NTP-004
Test Digital Line Connections to DDM-2000, DDM-1000, or DDM-Plus for Preservice RT (Optional) . . . . . NTP-005
Turn Up Series 5 RT Blue or White System Equipped for Feature Package 303 . . . . . NTP-006
Add DS1s to an In-Service Feature Package 303 RT . . . . . NTP-007
Clear FAIL LED Problems on a Unit During Turnup and Conversion. . . . . TAP-100
Verify That Correct Complement of Circuit Packs is Available . . . . . DLP-500

## FIND YOUR JOB IN THE LIST BELOW . . . . . THEN GO TO

CAUTION:
*With the introduction of additional features for the Series 5 system, it becomes imperative that personnel turning up an RT bank assembly use care when making settings on circuit packs (CPs) being installed and ensure that the correct codes of CPs are installed into the proper slots in the RT bank assembly. Failure to observe these cautions may result in immediate or future loss of service or may introduce errors into the digital bitstream. Accurate facility records should be used to determine correct CP code, bank slot position, and to make all CP option switch settings. Listed below are several indications that the craft personnel may use to determine whether an error has been made during RT bank turnup:*

- When a CP is installed, the CP FAIL indicator (LED) should be observed to ensure that it comes on momentarily, then goes off. The absence of this just powered up (JPU) indication should cause the craft personnel to check for proper CP type, option settings, and location.
- A misplaced or misset CP should always cause the associated digroup indicator (on the BCU) to light.
- If the FAIL LED stays on following the installation of a common unit, the CP is probably failed or in the wrong position. This indication does not always occur due to system design.
- The following procedure may be used when a problem is indicated (as above) following installation of a CP. A simple verification of craft personnel error may be made as follows: While observing the FAIL LED on the CP just installed, depress the ADU LAMP TEST switch. With the exception of an ADU CP, if option switches on the CP just installed are set incorrectly, the FAIL LED on the CP will not light.

CAUTION:
*In dusty areas (for example, near construction sites), Lucent Technologies recommends tenting the RT cabinet to protect electronic equipment whenever cabinet doors are open for extended periods.*

## FIND YOUR JOB IN THE LIST BELOW . . . . . THEN GO TO

Block diagrams of the various feature package arrangements available for the *SLC* Series 5 Carrier System are shown in Figure 1.

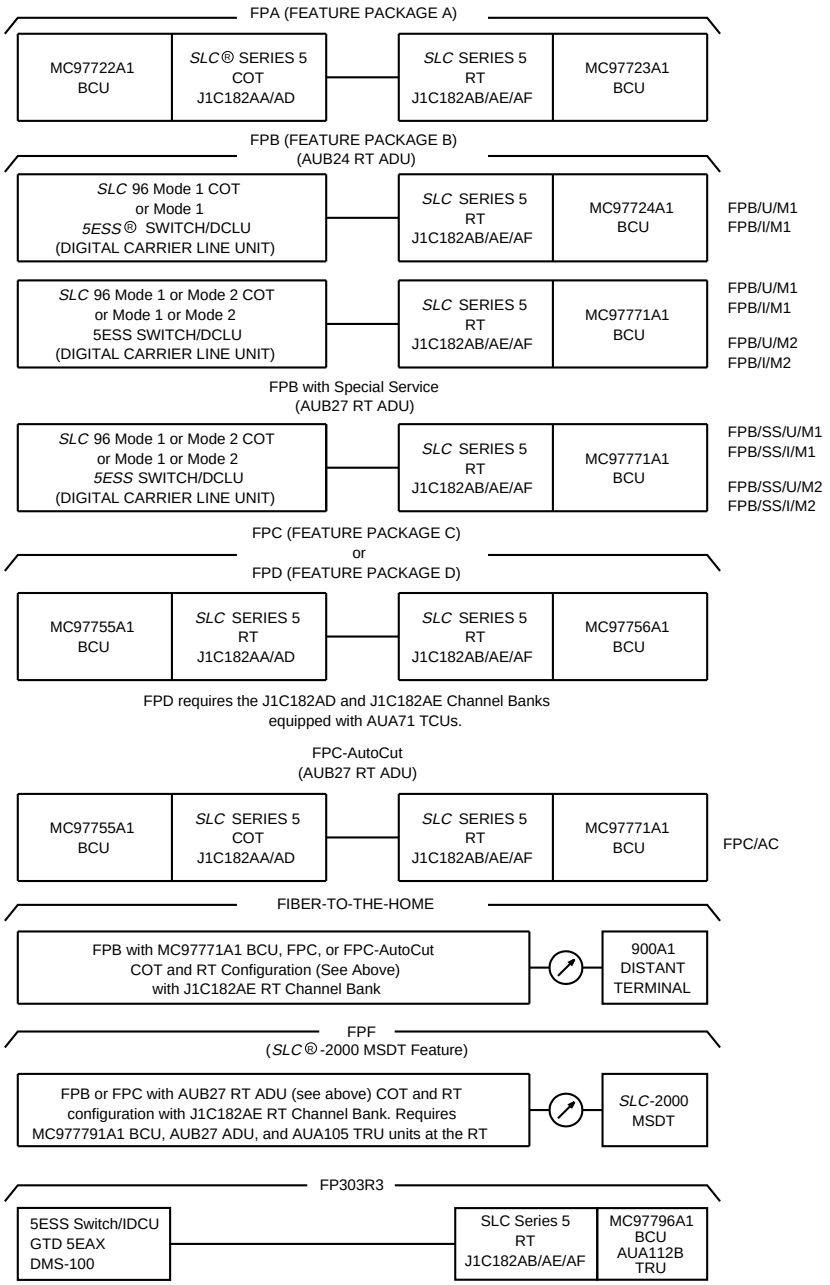


**Figure 1 – Feature Package Arrangements**

# Acceptance

## GENERAL

Acceptance tests are performed to ensure proper installation procedures have been performed. The acceptance procedures are found in the Acceptance Tab of this document. These procedures should be done before the equipment is turned up.

# Turn Up Series 5 RT Blue or White System for Any Feature Package Except FP 303[1]

| DO ITEMS BELOW IN ORDER LISTED | FOR DETAILS, GO TO |
|---|---|

1.

**NOTE:**
This procedure covers turning up the blue (lower) and/or white (upper) system of a dual channel bank assembly. This procedure is used for *any feature package equipage* of the RT system.

This procedure assumes the following:

- The outside cable pairs are not closed through to the RT so that the RT is isolated from the digital and derived lines.
- The frame or cabinet housing the RT has been installed.
- The J1C182AB, J1C182AE, or J1C182AF assembly has been installed in the frame or cabinet enclosure.
- The miscellaneous pair panel, protector connectors, power shelf, fan shelves, and battery shelves (if required) have been installed in the frame or cabinet enclosure.
- The Acceptance Tab procedures in this volume have been performed.
- The cabinet or frame power equipment has been turned up using Power Up Tab procedures in this volume.

This procedure contains instructions concerning the installation of the various units into the RT channel bank assembly shelves, and for verifying that the units are operating properly.

1. For FP 303, see NTP-006

| DO ITEMS BELOW IN ORDER LISTED | FOR DETAILS, GO TO |
|---|---|

2.

**NOTE:**
This procedure allows equipping and testing of digroups AB and CD during initial installation of the blue or white RT system. Procedures for adding digroups CD to an in-service RT are found in NTP-004. During initial installation, at least digroups AB of the blue (lower) system must be equipped and tested. After the blue system is equipped, the white (upper) system can be equipped and tested.

Get support apparatus listed:

- 216-type tool (80-type cabinet only),
- Special key (allen-type wrench) - COMCODE 846244168 (51-type and 80-type cabinet only),
- Digital Multimeter (DMM) with an accuracy of 1.0% and an ac/dc input impedance of ≥ 1 megohm.

---

3.

**CAUTION:**
*An electrostatic discharge wrist strap with a minimum resistance of 250K Ohms should be worn when handling Series 5 circuit packs to prevent possible damage to the circuit packs. Before using the wrist strap, check it for opens, shorts, and minimum resistance value. If the strap does not pass these checks it should not be used. To avoid possible personal injury while using the wrist strap, do not connect it to the power shelf or adjacent portions of the RT frame. Connect the wrist strap to ESD GRD jack on the fan unit, if present. If grounding jack is not present, connect wrist strap to bare-metal section of the frame well away from the power shelf.*

| DO ITEMS BELOW IN ORDER LISTED | | FOR DETAILS, GO TO |
|---|---|---|
| | **NOTE:** The term "facility shelf" is used throughout this procedure to refer to the middle shelf in the Series 5 RT. The remaining shelves will be referenced according to digroup name (for example, AB shelf contains digroups A and B). White system refers to the two upper shelves of the Series 5 RT plus the right half of the facility shelf and blue system refers to the two lower shelves of the Series 5 RT plus the left half of the facility shelf.<br><br>Install 3-type protectors in protector panel for shelf group(s) being equipped. | |
| 4. | Verify, per work order, that the correct complement of circuit packs is available. | DLP-500 |
| 5. | If the blue (lower) system is being equipped continue with Step **6**. Otherwise, to equip the white system, proceed to Step **9**. | |
| 6. | If required [the LFU is required if AUA62( ) line powering LIUs are used], install and check fuses in **LFU** (line fuse unit) in facility shelf. | DLP-501 |
| 7. | Install and test **PCU** (power converter unit) in facility shelf. | DLP-502 |
| 8. | **NOTE:** The 4A fan does not require the FCU but should be tested by pressing the test button (at least 3 times) and verifying the fan runs fast, slow, and stops.<br><br>Install **FCU** (fan control unit) [if **2( ) FAN UNIT** is installed]. | DLP-503 |
| 9. | Install and check fuses in **CFU** (channel fuse unit). | DLP-504 |

| DO ITEMS BELOW IN ORDER LISTED | FOR DETAILS, GO TO |
|---|---|
| 10. | |
| **NOTE:** The choice **ADU, BCU, TRU,** and **LIU** determines the Feature Package configuration of the RT system. | |
| Install **ADU** (alarm display unit) optioned for *pre-service and unequipped*, install **BCU**, and then change the **ADU** options to *pre-service and equipped*: | |
| A. **AUB21 ADU** [Feature Package A (FPA) using MC97723A1 or MC97756A1 BCU). | DLP-505 |
| B. **AUB24 ADU** (FPB Mode 1 using MC97724A1, MC97771A1, or MC97776A1 BCU. FPB Mode 2 with MC97771A1 or MC97776A1 BCU. No special service). | DLP-505 |
| C. **AUB27 ADU** [FPB Mode 1 or Mode 2 with special service, and FPC-Autocut using MC97771A1 or MC97776A1 BCU. Feature Package F FPF (ADU optioned as FPC) using MC97779A1 BCU.] | DLP-506 |
| D. **AUB26 ADU** [FPC or Feature Package D (FPD) using MC97756A1 BCU.] | DLP-507 |
| 11. Install and test **PCU** in AB shelf. | DLP-509 |
| 12. Install **TRU** (transmit/receive unit) in AB shelf. | DLP-510 |
| 13. For FPD only, install **TCU** (transcoder unit) in **LIU-B** slot in facility shelf. | DLP-511 |
| 14. | |
| **NOTE:** All **LIU**s in the same system should have identical option switch settings. | |
| Install DS1 **LIU** (line interface unit) in **LIU-A** slot in facility shelf after making option, equalizer, and transmit pad settings. | DLP-512 |

| DO ITEMS BELOW IN ORDER LISTED | FOR DETAILS, GO TO |
|---|---|
| 15. | |
| **NOTE:** All **LIU**s in the same system should have identical option switch settings. | |
| **NOTE:** FPB Mode 2 does not require an LIU in LIU-B slot. FPD requires a TCU in LIU-B slot. | |
| Install DS1 **LIU** in **LIU-B** slot in facility shelf after making option, equalizer, and transmit pad settings for FPA, FPB Mode 1, FPC, or FPC-AutoCut, or FPF. | DLP-512 |
| 16. If equipping shelves CD in the dual bank assembly, continue with Step **17**. Otherwise, proceed to Step **23**. | |
| 17. Install (if not previously installed) 3-type protectors in protector panel for shelf group(s) being equipped. | |
| 18. Install **PCU** in CD shelf. | DLP-513 |
| 19. Install **TRU** in CD shelf. | DLP-514 |
| 20. For FPD only, install **TCU** (transcoder unit) in **LIU-D** slot in facility shelf. | DLP-511 |
| 21. | |
| **NOTE:** All **LIU**s in the same system should have identical option switch settings. | |
| Install DS1 **LIU** in **LIU-C** slot in facility shelf after making option, equalizer, and transmit pad settings. | DLP-512 |

| DO ITEMS BELOW IN ORDER LISTED | FOR DETAILS, GO TO |
|---|---|
| 22. | |
| **NOTE:** All **LIU**s in the same system should have identical option switch settings. | |
| **NOTE:** FPB Mode 2 does not require an LIU in LIU-D slot. FPD requires a TCU in LIU-D slot. | |
| Install DS1 **LIU** in **LIU-D** slot in facility shelf after making option, equalizer, and transmit pad settings for FPA, FPB mode 1, FPC, FPC-AutoCut, or FPF. | DLP-512 |
| 23. If protection switching is desired, install associated **LSU** (line switch unit) in facility shelf. Otherwise, proceed to Step **25**. | DLP-515 |
| 24. | |
| **NOTE:** All **LIU**s in the same system should have identical option switch settings. | |
| Install associated DS1 protection **LIU** (if required) in **LIU-P** slot in facility shelf after making option, equalizer, and transmit pad settings. | DLP-512 |
| 25. | |
| **NOTE:** The **CTU** is used with the pair gain test controller (PGTC) or extended test controller (XTC) to enable remote testing of channel units and subscriber lines beyond the remote terminal. The **AUB25** is compatible with the MC97756A1 or MC97771A1 BCU and provides special service test capability if the XTC is used. The **AUB22** is compatible with any feature package."except FPD. | |
| Install **CTU** (channel test unit) (if the XTC or PGTC is used for remote testing and **CTU** has not been previously installed). | DLP-516 |
| 26. Install **DTU** (digital test unit) (if required). | DLP-517 |
| 27. Perform RT indicator test. | DLP-518 |
| 28. If equipping additional shelves in dual bank assembly (white system), proceed to Step **4**. Otherwise, continue with Step **29**. | |

| DO ITEMS BELOW IN ORDER LISTED | FOR DETAILS, GO TO |
|---|---|
| 29. Perform check of RT remote alarms (if not previously checked). | DLP-519 |
| 30. **CAUTION:** *This test may interrupt service on working systems in an 80E-type cabinet with bulk power plant and should be done only on initial installation of the bulk power plant.* | |
| **NOTE:** This test requires a load of at least 3A (3 mV DC at **PC** and **PCR** test points) on the bulk power plant. If at least one *fully equipped* dual channel bank is installed, there will be enough load for testing. | |
| If this is the initial installation of an RT channel bank assembly in an 80E-type with bulk power, test battery string for open circuit (**OPEN BAT TEST**). If you have any other type of RT configuration (except the 80E cabinet equipped with the ED-7C704-30 bulk power plant equipment), or this test has been done, this test is not required. | DLP-520 |
| 31. Update office records. | |
| 32. Perform End-to-End tests in 363-205-406 TOP when required. | |

# Add Digroups C and D to an In-Service RT System for Any Feature Package

| DO ITEMS BELOW IN ORDER LISTED | FOR DETAILS, GO TO |
|---|---|

1.

**NOTE:**
This procedure covers adding digroups C and D to an in service RT system. This procedure is used for *any feature package equipage* of the RT system.

This procedure assumes the following:

- Digroups AB of the RT system are in service.
- The outside cable pairs are not closed through to the RT so that the new digroup(s) are isolated from the digital and derived lines.
- Personnel at the central office are notified that alarms may come in as a result of these Steps.

This procedure contains instructions concerning the installation of the various units into the system RT channel bank assembly shelves, and for verifying that the units are operating properly.

2. Get support apparatus listed:
   - 216-type tool (80-type cabinet only),
   - Special key (allen-type wrench) - COMCODE 846244168 (51-type and 80-type cabinet only),
   - Digital multimeter (DMM) with an accuracy of 1.0% and an AC/DC input impedance of ≥ 1 megohm.

| DO ITEMS BELOW IN ORDER LISTED | FOR DETAILS, GO TO |
|---|---|

3.

**CAUTION:**
*An electrostatic discharge wrist strap with a minimum resistance of 250K Ohms should be worn when handling Series 5 circuit packs to prevent possible damage to the circuit packs. Before using the wrist strap, check it for opens, shorts, and minimum resistance value. If the strap does not pass these checks it should not be used. To avoid possible personal injury while using the wrist strap, do not connect it to the power shelf or adjacent portions of the RT frame. Connect the wrist strap to ESD GRD jack on the fan unit, if present. If grounding jack is not present, connect wrist strap to bare-metal section of the frame well away from the power shelf.*

**NOTE:**
The term "facility shelf" is used throughout this procedure to refer to the middle shelf in the Series 5 RT. The remaining shelves will be referenced according to digroup name (for example, AB shelf contains digroups A and B). White system refers to the two upper shelves of the Series 5 RT plus the right half of the facility shelf, and blue system refers to the two lower shelves of the Series 5 RT plus the left half of the facility shelf.

Install 3-type protectors in protector panel for shelf group(s) being equipped.

| | | |
|---|---|---|
| 4. | Verify, per work order, that the correct complement of circuit packs is available. | DLP-500 |

| DO ITEMS BELOW IN ORDER LISTED | FOR DETAILS, GO TO |
|---|---|
| 5. **CAUTION:** *Removing the ADU or BCU in an FPB Mode 1 system will interrupt service on digroup A.* | |
| Install equipped and pre-service options in **ADU** for digroups C and D: | |
| A. **AUB21 ADU** (FPA using MC97723A1 or MC97756A1 BCU.) | DLP-505 |
| B. **AUB24 ADU** (FPB Mode 1 using MC97724A1, MC97771A1, or MC97776A1 BCU. FPB Mode 2 with MC97771A1 or MC97776A1 BCU. No special service.) | DLP-505 |
| C. **AUB27 ADU** [FPB Mode 1 or Mode 2 with special service, and FPC-AutoCut using MC97771A1 or MC97776A1 BCU. FPF (ADU optioned for FPC) using MC97779A1 BCU.] | DLP-506 |
| D. **AUB26 ADU** (FPC or FPD using MC97756A1 BCU.) | DLP-507 |
| 6. Install and test **PCU** in CD shelf. | DLP-509 |
| 7. Install **TRU** (transmit/receive unit) in CD shelf. | DLP-510 |
| 8. For FPD only, install **TCU** (transcoder unit) in **LIU-D** slot in facility shelf. | DLP-511 |
| 9. **NOTE:** All **LIU**s in the same system should have identical option switch settings. | |
| Install DS1 **LIU** (line interface unit) in **LIU-C** slot in facility shelf after making option, equalizer, and transmit pad settings. | DLP-512 |

| DO ITEMS BELOW IN ORDER LISTED | FOR DETAILS, GO TO |
|---|---|
| 10. | |
| **NOTE:** All **LIU**s in the same system should have identical option switch settings. | |
| **NOTE:** FPB Mode 2 does not require an LIU in LIU-D slot. FPD requires a TCU in LIU-D slot. | |
| Install DS1 **LIU** in **LIU-D** slot in facility shelf after making option, equalizer, and transmit pad settings for FPA, FPB Mode 1, FPC, FPC-AutoCut, or FPF. | DLP-512 |
| 11. If protection switching is being added, install associated **LSU** (line switch unit) in facility shelf. Otherwise, proceed to Step **13**. | DLP-515 |
| 12. | |
| **NOTE:** All **LIU**s in the same system should have identical option switch settings. | |
| Install associated DS1 protection **LIU** (if required) in **LIU-P** slot in facility shelf after making option, equalizer, and transmit pad settings. | DLP-512 |
| 13. Perform RT indicator test. | DLP-518 |
| 14. Update office records. | |
| 15. Perform End-to-End tests in 363-205-406 TOP when required. | |

# Test Digital Line Connections to DDM-2000, DDM-1000, or DDM-Plus For Preservice RT (Optional)

**Overview:**

This procedure is used to verify the connection between the RT channel back LIUs and the DDM-2000, DDM-1000, or DDM-Plus multiplexer low speed interface packs. A DDM-Plus or T1 repeater shelf may be used to provide a T1 extension facility between the multiplexer and the RT channel bank. The RT must be equipped and the ADU optioned for preservice before doing this procedure. When the RT is in preservice, the LIUs will transmit a DS1/T1 signal toward the connecting equipment, but will ignore the received DS1/T1 signal from the connecting equipment. When the protectors for the DS1/T1 facility are installed and all facility interface are optioned for the same line coding (B8ZS or AMI/ZCS), the RT-to-multiplexer connection can be verified by removing the RT LIU and checking for loss of DS1 signal at the multiplexer. The DDM-2000, DDM-1000, and DDM-Plus can be optioned NOT to activate alarms when an incoming signal is bad.

| | |
|---|---|
| 1. | Verify the RT channel bank has been turned up in a preservice state. |
| 2. | Install digital line protectors as required (at RT, Multiplexer, T1 repeater shelf,...). |
| 3. | Verify the multiplexer (DDM-2000, DDM-1000, or DDM-Plus optical mode) and T1 extension facility (DDM-Plus repeater mode or T1 repeater shelf, if used) have been turned up and tested End-to-End using the documentation for the type of equipment used. |
| 4. | Add DS1 ports to the multiplexer (option switch settings or SET-STATE-T1 and SET-T1 command for the DDM-2000 multiplexer; SET-DSX-CODE command for the DDM-1000 multiplexer) with the line coding optioned the same as the RT LIUs. |

| DO ITEMS BELOW IN ORDER LISTED | FOR DETAILS, GO TO |
|---|---|
| 5. If the DDM-Plus optical mode is used, set line coding option on the OLIU and activate the DS1 ports by pressing **NE/ENABLE** and **DS1 SEL** pushbuttons at the same time. Then press **FE/ENABLE** and **DS1 SEL** pushbuttons at the same time. | |
| 6. Verify the multiplexer low speed interface loss of signal alarm is not active (flashing ALM for DDM-1000, flashing FAULT for DDM-2000, or flashing DS1 on DDM-Plus optical mode). | |
| 7. At the RT channel bank, remove LIU A and verify loss of signal alarm at the multiplexer low speed interface circuit pack (flashing ALM for DDM-1000, flashing FAULT for DDM-2000, or flashing DS1 on DDM-Plus optical mode). Reinstall LIU A and repeat for LIUs B, C, and D as required.<br><br>Comment: If a T1 extension facility is used, these procedures require a craft person at the multiplexer Hub to verify alarm responses.<br><br>Comment: If you do not note the proper alarm responses, verify cross-connections, protectors are installed, and the multiplexer is functioning properly using appropriate documentation for the type of equipment installed. | |
| 8. To test the DS1 signal path for back-to-back multiplexers (DDM-2000/1000 to DDM-Plus optical mode), loopback the DDM-Plus toward the central office (at the RT site back to the Hub). Then connect a DS1 test set to the appropriate DSX Jacks at the central office. Verify a test signal transmitted toward the RT is looped back to the receive side of the DS1 facility. | |

# Turn Up Series 5 RT Blue or White System Equipped for Feature Package 303

**DO ITEMS BELOW IN ORDER LISTED** **FOR DETAILS, GO TO**

**SUMMARY:** Use this procedure to turn up Feature Package 303 (FP303) in the blue (lower) or white (upper) system of a dual channel bank. The A and C line interface unit (LIU) DS1 facilities carry the active and standby embedded operations channel (EOC) and timeslot management channel (TMC) for a system; therefore, the minimum turn up must include both of these facilities. B and/or D LIU DS1 facilities can also be equipped now or at a later time. BCU and TRU Release 3.0 firmware accommodates the Common Management Information Protocol (CMIP-91) version.

The term "facility shelf" is used throughout this procedure to refer to the middle shelf of the Series 5 RT. The remaining shelves will be referenced according to digroup name (for example, the shelf containing digroups A and B is referred to as the AB shelf). The white system refers to the two upper shelves of the Series 5 RT plus the right half of the facility shelf; the blue system refers to the two lower shelves of the Series 5 RT plus the left half of the facility shelf.

1. Get support equipment listed:
   - 216-type tool (80-type cabinet only)
   - Special key (allen-type wrench) - COMCODE 846244168 (51- and 80-type cabinet only)
   - DMM (digital multimeter) with an accuracy of 1.0% and an AC/DC input impedance of ≥ 1 megohm.

| DO ITEMS BELOW IN ORDER LISTED | FOR DETAILS, GO TO |
|---|---|

2. Verify the following:

   - The outside cable pairs are not connected through to the remote terminal (RT) so that the RT is isolated from the digital and derived lines.
   - The frame or cabinet housing the RT has been installed.

     The J1C182AB, J1C182AC, J1C182AE, J1C182AF, or J1C182AH dual channel bank assembly has been installed in the frame or cabinet enclosure.
   - The miscellaneous pair panel, protector connectors, power shelf, fan shelves, and battery shelves (if required) have been installed in the frame or cabinet enclosure.
   - The acceptance procedures in this volume have been performed.
   - The cabinet or frame supporting equipment has been turned up using procedures in this volume.

---

3. **CAUTION:**
   *An electrostatic discharge wrist strap with a minimum resistance of 250K Ohms should be worn when handling Series 5 circuit packs to prevent possible damage to the circuit packs. Before using the wrist strap, check it for opens, shorts, and minimum resistance value. If the strap does not pass these checks it should not be used. To avoid possible personal injury while using the wrist strap, do not connect it to the power shelf or adjacent portions of the RT frame. Connect the wrist strap to ESD GRD jack on the fan unit, if present. If grounding jack is not present, connect wrist strap to bare-metal section of the frame well away from the power shelf.*

   Remove 3-type voltage protector units in protector panel forthe DS1s being equipped.

---

4. Verify, per work order, that the correct complement of circuit packs is available. — DLP-521

| DO ITEMS BELOW IN ORDER LISTED | FOR DETAILS, GO TO |
|---|---|
| 5. If not previously installed, install and test the power converter unit (**PCU**) in the facility shelf. | DLP-502 |
| 6. Install the channel fuse unit (**CFU**) and check fuses. | DLP-504 |
| 7. **NOTE:** A line fuse unit (**LFU**) is required if equipping the RT dual channel bank with **AUA62F** line powering line interface units (**LIU**s).<br><br>If not previously installed and if required, install the **LFU** in the facility shelf and check fuses. | DLP-501 |
| 8. Install the fan control unit (**FCU**), if the 2() Fan Unit is installed. | DLP-503 |
| 9. Set option switches for preservice and unequipped. Install the alarm display unit (**ADU**) and disregard all alarms. | DLP-523 |
| 10. Install the bank control unit (**BCU**). | DLP-522 |

11. Remove the **ADU**. Change switch S1-5 and S1-6 to **ABE** and **CDE**. If also equipping the B DS1, change S2-7 to the left (not labeled). If also equipping the D DS1, change S2-8 to the left (not labeled).

    Set the **NORM/CLEAR** option plug for **NORM**. Reinstall the **ADU**.

    **CAUTION:**
    *If the **NORM/CLEAR** option plug is left in the **CLEAR** position, administrative memory clears each time the bank resets. This memory clearing results in a temporary service interruption.*

    If a channel test unit (**CTU**) or digital test unit (**DTU**) is already installed in the dual bank assembly, after about 75 seconds, only the **MJ** and **NE** LEDs on the **ADU** and the **DIGROUP** LEDs on the **BCU** stay lighted.

    Otherwise, after about 75 seconds, only the **FAIL**, **MN**, and **NE** LEDs on the **ADU** stay lighted.

| DO ITEMS BELOW IN ORDER LISTED | FOR DETAILS, GO TO |
|---|---|
| 12. Install and test a **PCU** in AB shelf. | DLP-509 |
| 13. Install and test a **PCU** in CD shelf. | DLP-513 |
| 14. Install an **AUA112()** transmit/receive unit (**TRU**) in AB shelf. Verify that the **TRU FAIL** LED lights and goes off. If not, do **TAP-100** before continuing.<br><br>In about 25 seconds, only the **MJ** and **NE** on the **ADU** and the **DIGROUP** LEDs on the **BCU** stay lighted.<br><br>Since a minimum system configuration requires equipping both the A and C DS1 facilities, the **A** and **C DIGROUP** LEDs will be lighted. The **D DIGROUP** LED will also light whether or not it is being equipped. The **B** will only light if the **B DIGROUP** DS1 facility is being equipped. | |
| 15. Install an **AUA112()** transmit/receive unit (**TRU**) in CD shelf. Verify that the **TRU FAIL** LED lights and goes off. If not, do **TAP-100** before continuing.<br><br>Only the **MJ**, **NE**, and **CMP** on the **ADU** and the **DIGROUP** LEDs on the **BCU** stay lighted.<br><br>Since a minimum system configuration requires equipping both the A and C DS1 facilities, the **A** and **C DIGROUP** LEDs will be lighted. The **D DIGROUP** LED will also light whether or not it is being equipped. The **B** will only light if the **B DIGROUP** DS1 facility is being equipped. | |
| 16. Install the **993A TRU** cable between the faceplate connectors on the **TRUs**. The **CMP** LED on the **ADU** clears in about 30 seconds.<br><br>If the **LIU D** DS1 facility is not being equipped, the **D DIGROUP** LED goes off at this point. | |

| DO ITEMS BELOW IN ORDER LISTED | FOR DETAILS, GO TO |
|---|---|
| 17. **NOTE:** All line interface units (**LIU**s) in the same system should have identical option switch settings.<br><br>Set options and install a C- or D-type **LIU** in the facility shelf for each DS1 being equipped. Wait for the **FAIL** LED on the **LIU** to light and go off before installing the next **LIU**. If the **FAIL** LED fails to light and go off, do **TAP-100** before continuing.<br><br>Within 30 seconds, the **DIGROUP** LED on the **BCU** for the **LIU** just installed goes off. After the last digroup LIU is installed in a system optioned for protection switching, only the **MN** and **NE** LEDs on the ADU remain lighted. In systems not optioned for protection switching, all alarms clear. | DLP-524 |
| 18. If protection switching is desired, install **AUA74 LSU** (line switch unit) in facility shelf. Otherwise, proceed to Step 20. | DLP-525 |
| 19. **NOTE:** All line interface units (**LIU**s) in the same system should have identical option switch settings.<br><br>Set options and install a C- or D-type **LIU** in the LIU-P slot in the facility shelf. The **FAIL** LED on the **LIU** should light momentarily and go off. If the **FAIL** LED fails to light and go off, do **TAP-100** before continuing.<br><br>Within 30 seconds, the **MN** and **NE** LED on the **ADU** goes off. | DLP-524 |
| 20. **NOTE:** The **CTU** is used with the pair gain test controller (PGTC) to enable remote testing of channel units and subscriber lines beyond the remote terminal.<br><br>If required and not previously installed, install the **CTU**. Verify that the **FAIL** LED on the **CTU** lights and goes off and **BUSY** LED is off. If not, check fuses on the **CFU** then do **TAP-100** before continuing. | |

| DO ITEMS BELOW IN ORDER LISTED | FOR DETAILS, GO TO |
|---|---|
| 21. Perform RT LED test. | DLP-526 |
| 22. Update office records. | |
| 23. Perform End-to-End tests in 363-205-406 when required. | |

# Add DS1s to an In-Service Feature Package 303 RT

**SUMMARY:** Use this procedure to add line interface unit (LIU) B and/or D DS1 facilities to an in-service Feature Package 303 (FP303) remote terminal (RT).

1.

**CAUTION:**
*An electrostatic discharge wrist strap with a minimum resistance of 250K Ohms should be worn when handling Series 5 circuit packs to prevent possible damage to the circuit packs. Before using the wrist strap, check it for opens, shorts, and minimum resistance value. If the strap does not pass these checks it should not be used. To avoid possible personal injury while using the wrist strap, do not connect it to the power shelf or adjacent portions of the RT frame. Connect the wrist strap to ESD GRD jack on the fan unit, if present. If grounding jack is not present, connect wrist strap to bare-metal section of the frame well away from the power shelf.*

Remove the **ADU**. If equipping the B DS1, change S2-7 to the left (not labeled). If equipping the D DS1, change S2-8 to the left (not labeled). Reinstall the **ADU**.

Ignore initial alarms. Within 75 seconds, the **MJ** and **NE** LEDs on the **ADU** and the **DIGROUP** LED(s) (for the DS1(s) being equipped) on the **BCU** stay lighted.

| DO ITEMS BELOW IN ORDER LISTED | FOR DETAILS, GO TO |
|---|---|
| 2. | |
| **NOTE:** All line interface units (**LIU**s) in the same system should have identical option switch settings. | |
| Set options and install a C- or D-type **LIU** in the facility shelf for the B and/or D DS1s. Wait for the **FAIL** LED on the **LIU** to light and go off. If the **FAIL** LED fails to light and go off, do **TAP-100** before continuing.<br><br>Within 30 seconds, the **DIGROUP** LED on the **BCU** for the **LIU(s)** just installed goes off and all alarms clear. | DLP-524 |
| 3. Perform RT LED test. | DLP-526 |
| 4. Update office records. | |

# Clear FAIL LED Problems on a Unit During Turnup and Conversion

Use this procedure when on installing a unit, the unit's **FAIL** LED remains lighted or fails to light momentarily and go off. This procedure assumes there are no blown fuses on the **BFU**, **CFU**, or **LFU** fuse units and each **PCU** voltage (-42 to -56 V DC) is present.

1. Press and hold **LED TEST** button on the **ADU**.

2. Do the LEDs on the common units light?

   If **YES**, proceed to Step **12**.
   If **NO**, continue with Step **3**.

3. Replace the bank control unit (**BCU**).

4. Press and hold **LED TEST** button on the **ADU**.

5. Do the LEDs on the common units light?

   If **YES**, proceed to Step **12**.
   If **NO**, continue with Step **6**.

6. Replace the **BCU** with the **BCU** removed previously.

7. Replace the alarm display unit (**ADU**).

8. Press and hold **LED TEST** button on the **ADU**.

9. Do the LEDs on the common units light?

   If **YES**, proceed to Step **12**.
   If **NO**, continue with Step **10**.

10. Replace the **ADU** with the **ADU** removed previously.

11. Check the wiring using SD-7C117-01, SD-7C117-02, or SD-7C117-03. After locating and correcting the wiring trouble, go back to the NTP and reinstall the unit with the **FAIL** LED problem.

12. Is the **FAIL** LED on the suspect unit lighted?

    If **YES**, continue with Step **13**.
    If **NO**, proceed to Step **14**.

13. With the **LED TEST** button held, does the **FAIL** LED on the suspect unit go off?

    If **YES**, proceed to Step **24**.
    If **NO**, continue with Step **14**.

14. Replace the suspect unit with another unit of the same type.

15. Did the **FAIL** LED on the suspect unit light momentarily and then go off?

    If **YES**, **STOP. YOU HAVE COMPLETED THIS PROCEDURE.**
    If **NO**, continue with Step **16**.

16. Replace the unit with the unit removed previously.

17. Replace the **BCU**.

18. Did the **FAIL** LED on the suspect unit go off?

    If **YES**, **STOP. YOU HAVE COMPLETED THIS PROCEDURE.**
    If **NO**, continue with Step **19**.

19. Replace the **BCU** with the **BCU** removed previously.

20. Replace the **ADU**.

21. Did the **FAIL** LED on the suspect unit go off?

    If **YES**, **STOP. YOU HAVE COMPLETED THIS PROCEDURE.**
    If **NO**, continue with Step **22**.

22. Replace the **ADU** with the **ADU** removed previously.

23. Check the wiring using SD-7C117-01, SD-7C117-02, or SD-7C117-03. After locating and correcting the wiring trouble, go back to the NTP and reinstall the unit with the FAIL LED problem.

24. Release the **LED TEST** button. Is the **CMP** LED on the **ADU** lighted?

    If **YES**, continue with Step **25**.
    If **NO**, proceed to Step **26**.

25. There is either a common unit or option switch incompatibility within the system. Either replace the incompatible unit with a compatible unit, or correct the option switch setting on the ADU or suspect unit itself.

    Reference: **DLP-523 (ADU), DLP-524 (LIU), DLP-521 (CU Compatibility)**

26. After correcting the incompatibility problem, did the **FAIL** LED on the suspect unit go off?

    If **YES**, **STOP. YOU HAVE COMPLETED THIS PROCEDURE.**
    If **NO**, continue with Step **27**.

27. Check the wiring using SD-7C117-01, SD-7C117-02, or SD-7C117-03. After locating and correcting the wiring trouble, go back to the NTP and reinstall the unit with the **FAIL** LED problem. If this fails to fix the **FAIL** LED problem, consult the Lucent Technologies Regional Technical Assistance Center (RTAC) by calling 1-800-225-RTAC or the local technical support group.

# Verify That Correct Complement of Circuit Packs is Available

1. Refer to Table A to determine the required number of circuit packs required for the shelves or banks to be equipped.

2. Refer to Table B and determine circuit pack codes required for the Feature Package application to be equipped.

   Comment: The version of common units required is determined by the ADU and BCU circuit used and feature package configuration.

3. Are all required circuit packs available?

   If **YES,** then **STOP. YOU HAVE COMPLETED THIS PROCEDURE.**
   If **NO,** then continue with Step **4.**

4. Obtain missing circuit packs through appropriate channels.

   **STOP. YOU HAVE COMPLETED THIS PROCEDURE.**

**Table A**
**SLC® Series 5 Carrier System RT Circuit Packs**

| Location | Circuit Pack | Quantity for Shelf Being Equipped in a One Dual Bank Assembly | | | |
|---|---|---|---|---|---|
| | | All Shelves | A-B Blue | C-D Blue OR White | A-B White |
| **Dual Bank Assembly** | PCU (AUA11,AUA11B,AUA11C) | 5 | 2 | 1 | 1 |
| | FCU (AUA24) | 2 | 1 | — | 1 |
| | CFU (AUA114, 39E) | 2 | 1 | — | 1 |
| | LFU (AUA115 ,39F) * | 1 | 1 | — | — |
| | LIU (See Table B) † | 10 | 3 | 2 | 3 |
| | TRU (See Table B) | 4 | 1 | 1 | 1 |
| | ADU (See Table B) | 2 | 1 | — | 1 |
| | BCU (See Table B) | 2 | 1 | — | 1 |
| | CTU (See Table B) | 1 | 1 | — | — |
| | DTU (See Table B) ‡ | 2 | 1 | — | 1 |
| | LSU (See Table B) § | 2 | 1 | — | 1 |
| | TCU (See Table B) ¶ | 4 | 1 | 1 | 1 |
| **J1C182BA Power Shelf** | LDU (ED7C613-30) | 1 | 1 | — | — |
| | 336A or 336A1 Rectifier ** | 2 | 2 | — | — |
| | 337A or 337A1 BAT. CHG. ** | †† | †† | †† | †† |
| | 3C or 3C1 RNG. GEN. ††† | 2 | 2 | — | — |
| | BFU (AUG11, 40D) | 1 | 1 | — | — |
| | PRU (AUG1) ‡‡ | 1 | — | — | — |
| **J1C182BB Bulk Power Shelf** | 3C or 3C1 RNG. GEN. ††† | 2 | 2 | — | — |
| | BFU (AUG11, 40D) | 1 | 1 | — | — |
| | PRU (AUG1) ‡‡ | 2 | — | — | — |
| | RSU (AUG2) | 1 | — | — | — |
| **J1C182BD Bulk Power Plant** | BIU (AUG4) | 1 | — | — | — |
| | 336A1 Rectifier ‡‡‡ | 5 | — | — | — |
| | RCU (AUG3) | 1 | — | — | — |
| | 3H1 RNG. GEN §§§ | 2 | — | — | — |
| **J1C182PB-1 Optics Power Shelf** | A/FCU (AUA402) | 1 | 1 | — | — |
| | PCU (AUA11B, AUA11C) | 4 | 1 | 1 | 1 |
| | BFU (AUG11, 40D) | 2 | 2 | — | — |
| **J1C182PA-1 Optical Shelf** | OU (AYB1,AYB1B) | §§ | §§ | §§ | §§ |
| **J1C182BC Ring Shelf** | 3C or 3C1 RNG. GEN. ¶¶,††† | 2 | 2 | — | — |
| | RCU (AUG3) ¶¶ | 1 | 1 | — | — |
| **ED7C704-30 OLS Rectifier Shelf** | Pwr. Unit CS787B540 *** | 2 | 2 | — | — |

* The LFU is required when the channel bank is equipped with AUA62( ) line powering LIUs.
† The quantity of LIU units include those needed for the T1 protection line. If the T1 protection lines are not utilized, this number can be reduced by one for each channel bank. FPD and FPB Mode 2 require only one LIU for each dual digroup shelf (A-B or C-D).
‡ The DTU is required for digital testing of special services.
§ The LSU is required only if protection switching is desired.
¶ The TCU is only for FPD.
** RT frame and 80D cabinet use 4 336A rectifiers with the 337A battery chargers mounted in battery shelves.
†† One 337A battery charger is required per battery shelf.
‡‡ The PRU is required only with multiparty channel units. A second PRU is required in the J1C182BB power shelf when serving three dual bank assemblies.
§§ One OU is required for each channel unit to be installed.
¶¶ The J1C182BC ring shelf can be equipped with an additional RCU and two 3C or 3C1 ringing generators.
*** A third CS787B540 is recommended when 4 or more channel banks are equipped or 3 or more battery strings are used.
††† The 3B or 3B1 ringing generator can be used if 30 Hz ringing current is desired.
‡‡‡ The J1C182BD is normally equipped with two battery strings and five 336A1s. Three 336A1s can be used if only one battery string is used.
§§§ The 3H1 is equivalent to the 3C1 ringing generator, but has a narrower faceplate.

**Table B**
**SLC® Series 5 Carrier System RT Common Unit Compatibility**

| | System Configuration (Note) | | | | | | | | | |
|---|---|---|---|---|---|---|---|---|---|---|
| | | FPB Universal or Integrated | | | | | | | | |
| | | No Special Service | | | With Special Service | | | | | |
| **Circuit Pack** | **FPA** | **M1** | **M1** | **M2** | **SS/M1** | **SS/M2** | **FPC-AutoCut** | **FPC** | **FPD** | **FP303** |
| **BCU** | 1 BCU is required for each system (Blue and White). | | | | | | | | | |
| **MC97723A1 *** | X | | | | | | | | | |
| **MC97724A1** | | R | | | | | | | | |
| **MC97756A1** | X | | | | | | | R | R | |
| **MC97771A1** | | | X | X | X | X | X | | | |
| **MC97776A1 †** | | | X | X | X | X | X | | | |
| **MC97779A1** | | | | | | | F¶ | | | |
| **MC97796A1** | | | | | | | | | | X |
| **MC97777A1** | | | | | | | | | | X |
| **ADU** | 1 ADU is required for each system (BLUE and WHITE). | | | | | | | | | |
| **AUB21 *** | R | | | | | | | | | |
| **AUB24** | | X | X | X | | | | | | |
| **AUB26** | | | | | | | | R | R | |
| **AUB27** | | X | X | X | R | R | R,F | | | X |
| **TRU** | 1 TRU is required for each equipped dual digroup shelf. | | | | | | | | | |
| **AUA21( )** | R | | | | | | | R | R | |
| **AUA22( )** | | R | X | | X | | | | | |
| **AUA105** | | | X | R | X | R | X,F | | | |
| **AUA109** | | | X | | X | | X | | | |
| **AUA112** | | | | | | | | | | X |
| **AUA112B** | | | | | | | | | | X |
| **LIU Line Power** | 1 LIU is required for each equipped digroup LIU slot, except FPB Mode 2 or FPD were on only LIU slots A and C need LIUs. If the protection line option is used, 1 more LIU is required. | | | | | | | | | |
| **AUA62 *** | X | X | X | | X | | | X | | |
| **AUA62B *** | X | X | X | | X | | | X | X | |
| **AUA62C *** | X | X | X | | X | | X,F | X | X | |
| **AUA62D** | X | X | X | R | X | R | X,F | X | X | |
| **LIU Power Looping** | See requirement for line power type LIUs. | | | | | | | | | |
| **AUA64 *** | X | X | X | | X | | | X | | |
| **AUA64B *** | X | X | X | | X | | | X | X | |
| **AUA64C *** | X | X | X | | X | | X,F | X | X | |
| **AUA64D** | X | X | X | R | X | R | X,F | X | X | |
| **LIU DSX-1 Interface** | See requirement for line power type LIUs. | | | | | | | | | |
| **AUA61 *** | X | X | X | | X | | | X | | |
| **AUA61B *** | X | X | X | | X | | | X | X | |
| **AUA61C *** | X | X | X | | X | | X,F | X | X | |
| **AUA61D** | X | X | X | R | X | R | X,F | X | X | |
| **CTU** | 1 CTU is required for each RT channel bank assembly. | | | | | | | | | |
| **AUB22** | R | R | X | X | X | X | X | X | X | |
| **AUB25 ‡,§** | | | X | X | X | X | X | X | X | |
| **DTU** | 1 DTU (1 of each code) is required for each RT channel bank assembly that require digital testing of special services. | | | | | | | | | |
| **AUA18** | | | | | XC | XC | XC | XC | XC | |
| **AUA19** | | | | | XC | XC | XC | XC | XC | |
| **LSU** | 1 LSU is required for each system (BLUE and WHITE) if protection line option is used. | | | | | | | | | |
| **AUA13 *** | X | X | X | X | X | X | X | X | | |
| **AUA73** | X | X | X | X | X | X | X | X | R | |
| **AUA74** | | | | | | | | | | |

**Table B**
**SLC® Series 5 Carrier System RT Common Unit Compatibility**

| | System Configuration (Note) | | | | | | | | | |
|---|---|---|---|---|---|---|---|---|---|---|
| | | FPB Universal or Integrated | | | | | | | | |
| | | No Special Service | | | With Special Service | | | | | |
| **Circuit Pack** | **FPA** | **M1** | **M1** | **M2** | **SS/M1** | **SS/M2** | **FPC-AutoCut** | **FPC** | **FPD** | **FP303** |
| **TCU** | 1 TCU is required for each equipped dual digroup shelf in B or D LIU slot. | | | | | | | | | |
| **AUA71** | | | | | | | | | R | |

Note: Fiber-To-The-Home is supported by any FPB, FPC, and FPC-AutoCut system configurations with J1C182AE RT channel bank assembly. FPF *SLC*-2000 MSDT feature offers FPC-AutoCut service capabilities. (Only operates in FPC mode, not FPB Mode 1.)
X = Compatible, R = Required, C = RT CIU Access,
F = Required for FPF *SLC*®-2000 MSDT applications

* Rated Discontinued Availability,
† The MC97776A1 and the MC97771A1 BCU are functionally equivalent.
‡ The AUB25 CTU must be used when the XTC is used at the central office.
§ The AUB25 can be used in FPB only if the MC97771A1 or MC97776A1 BCU is used.
¶ Requires the MC97755A1 2 BCU and AUB6( ) ADU at the COT for FPF compatibility.

# Install Line Fuse Unit (LFU) in RT Facility Shelf

1. Get one **AUA115** or **39F LFU** (Figure 1) and inspect for possible damage.

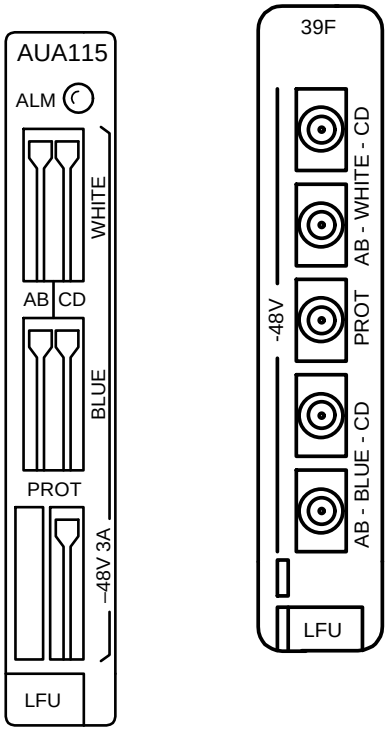


**Figure 1 – AUA115 and 39F Line Fuse Unit**

2. Verify that each fuse holder on faceplate of **LFU** contains 3.0A fuse (**WP90247 L110** in the **AUA115** or **80C** in the **39F**) and that fuses are not blown (fuse is blown when flag protrudes on faceplate). If a fuse is blown, use appropriate extractor tool (see Step 7) to replace fuse.

3. Install **LFU** into **LFU** slot in facility (middle) shelf.

4. Does any fuse(s) in **LFU** blow?

   If **YES,** then continue with Step **5.**
   If **NO,** then **STOP. YOU HAVE COMPLETED THIS PROCEDURE.**

5. Check wiring on dual bank assembly using SD-7C117-01 or SD-7C117-02 and SD-7C118-01.

6. Is wiring correct?

   If **YES,** then get another **LFU** and proceed to Step **2.**
   If **NO,** then continue with Step **7.**

7. Repair wiring and use **WP0247 L201** insertion/extraction tool for **AUA115 LFU**; or **WECO 553A** extractor tool (Techni-Tool No. 594TE170) or **WECO 319B** (KS-6305) extractor tool (Techni-Tool No. 490PL020) for **39F LFU**, to replace blown fuse(s).

# Install and Test Power Converter Unit (PCU) in Facility Shelf

**SUMMARY:** Install **PCU** in facility shelf and verify that **FAIL** indicator goes off and remains off. Measure –42 to –56 V DC at **PCU** faceplate.

1. Get one **PCU** (**AUA11**, **AUA11B** or **AUA11C**) and inspect for possible damage.

2. Insert **PCU** into **PCU** slot in facility (middle) shelf.

3. 

   **NOTE:**
   **FAIL** indicator on **PCU** may light momentarily when inserted into RT.

   Does **FAIL** indicator on **PCU** go off and remain off?

   If **YES,** then proceed to Step **8.**
   If **NO,** then continue with Step **4.**

4. Replace **PCU**.

5. 

   **NOTE:**
   **FAIL** indicator on **PCU** may light momentarily when inserted into RT.

   Does **FAIL** indicator on **PCU** go off and remain off?

   If **YES,** then proceed to Step **8.**
   If **NO,** then continue with Step **6.**

6. Replace **PCU** with **PCU** removed previously.

7. Use SD-7C117-01 or SD-7C117-02 to check bank wiring. Repeat procedure from Step **3** after locating and correcting trouble.

8. Condition DMM to measure volts DC.

9. On **PCU**, connect DMM test leads to **GND** jack and –**48** jack.

10. Does DMM indicate between –42 and –56 volts?

    If **YES,** then proceed to Step **31.**
    If **NO,** then continue with Step **11.**

11. Verify that wiring from power shelf to **PCU** in facility shelf is present and connected properly.

12. Is wiring present and connected properly?

    If **YES,** then proceed to Step **14.**
    If **NO,** then continue with Step **13.**

13. Resolve problem through local procedures. Repeat procedure from Step **3** after locating and correcting trouble.

14. Is system being equipped with Fiber-To-The-Home (FTTH) feature?

    If **YES,** then continue with Step **15.**
    If **NO,** then proceed to Step **18.**

15. At **BFU3** or **BFU4** in optics power shelf, is fuse –**48 WHITE**, –**48 BLUE**, or –**48 CMN** blown?

    If **YES,** then continue with Step **16.**
    If **NO,** then proceed to Step **18.**

16. Replace blown fuse(s).

17. Does fuse(s) blown again?

    If **YES,** then continue with Step **29.**
    If **NO,** then proceed to Step **8.**

18. Replace **PCU** in facility shelf.

19. Is **FAIL** indicator on **PCU** off?

    If **YES,** then continue with Step **20.**
    If **NO,** then proceed to Step **4.**

20. On **PCU**, connect DMM test leads to **GND** jack and –**48** jack.

21. Does DMM indicate between –42 and –56 volts?

    If **YES,** then proceed to Step **31.**
    If **NO,** then continue with Step **22.**

22. Replace **PCU** with **PCU** removed previously.

23. Is **PCU** being installed in a frame-type RT with bulk powering (J1C182BB bulk power shelf)?

    If **YES,** then proceed to Step **30.**
    If **NO,** then continue with Step **24.**

24.

    **NOTE:**
    Two dual bank assemblies share a common power shelf.

    Is **PCU** being installed in second dual bank assembly?

    If **YES,** then continue with Step **25.**
    If **NO,** then proceed to Step **29.**

25. Replace associated **336A RECTIFIER** located in power shelf.

26. On **PCU**, connect DMM test leads to **GND** jack and –**48** jack.

27. Does DMM indicate between –42 and –56 volts?

    If **YES,** then proceed to Step **31.**
    If **NO,** then continue with Step **28.**

28. Replace **336A RECTIFIER** with **336A RECTIFIER** removed previously.

29. Check wiring using SD-7C117-01 or SD-7C117-02 and, if system is being equipped with FTTH feature, also use SD-7C118-02 and SD-7C150-01. Repeat procedure from Step **3** after locating and correcting trouble.

30. Check fuses in RT dual bank assembly **LFU** and bulk power shelf **BFU**. If trouble is not found, check wiring at RT dual bank assembly and bulk power shelf using SD-7C117-01 or SD-7C117-02 and SD-7C130-01, respectively. Repeat procedure from Step **3** after locating and correcting trouble.

31. Disconnect DMM test leads.

    **STOP. YOU HAVE COMPLETED THIS PROCEDURE.**

# Install Fan Control Unit (FCU)

1.

**CAUTION:**
*Fan operation is essential to prevent system failures in the Series 5 RTs engineered and installed with fans.*

Get one **FCU** (**AUA24**) and inspect for possible damage.

Comment: The FCU is not required if the 4A Fan Unit is used.

2. Insert **FCU** into **FCU** slot in upper shelf of system being equipped.

3. Press **FAN TEST** button on **FCU**.

Response: Fans should operate while button is pressed.

4. Do fans operate while **FAN TEST** button is pressed?

If **YES,** then **STOP. YOU HAVE COMPLETED THIS PROCEDURE.**
If **NO,** then continue with Step **5.**

5. Is system equipped with Fiber-to-the-Home (FTTH) feature?

If **YES,** then continue with Step **6.**
If **NO,** then proceed to Step **7.**

6. Is –**48V FAN H** or –**48V FAN L** fuse on **BFU1** or **BFU2** blown?

If **YES,** then continue with Step **8.**
If **NO,** then proceed to Step **13.**

7. Is –**48V FAN H** or –**48V FAN L** fuse on **BFU** blown?

If **YES,** then continue with Step **8.**
If **NO,** then proceed to Step **13.**

8. Replace blown fuse(s) on **BFU**.

9. Press **FAN TEST** button on **FCU**.

   Response: Fans should operate while button is pressed.

10. Do fans operate while **FAN TEST** button is pressed?

    If **YES,** then **STOP. YOU HAVE COMPLETED THIS PROCEDURE.**
    If **NO,** then continue with Step **11.**

11. Does –**48V FAN H** or –**48V FAN L** fuse on **BFU** blow again?

    If **YES,** then continue with Step **12.**
    If **NO,** then proceed to Step **13.**

12. Check wiring using SD-7C118-01 or SD-7C118-02 (FTTH). Repeat procedure from Step **3** after locating and correcting trouble.

13. Replace **FCU**.

14. Press **FAN TEST** button on **FCU**.

    Response: Fans should operate while button is pressed.

15. Do fans operate while **FAN TEST** button is pressed?

    If **YES,** then **STOP. YOU HAVE COMPLETED THIS PROCEDURE.**
    If **NO,** then continue with Step **16.**

16. Replace **FCU** with **FCU** removed previously.

17. Is **FAN ALARM** indicator on fan shelf lighted?

    If **YES,** then continue with Step **18.**
    If **NO,** then proceed to Step **19.**

18. Replace fan shelf and repeat from Step **3.**

19. Check wiring to fan shelf per SD-7C118-01 or SD-7C118-02 (FTTH). Repeat procedure from Step **3** after locating and correcting trouble.

# Install Channel Fuse Unit (CFU)

1. Get **AUA114** or **39E CFU** (Figure 1) and inspect for possible damage.

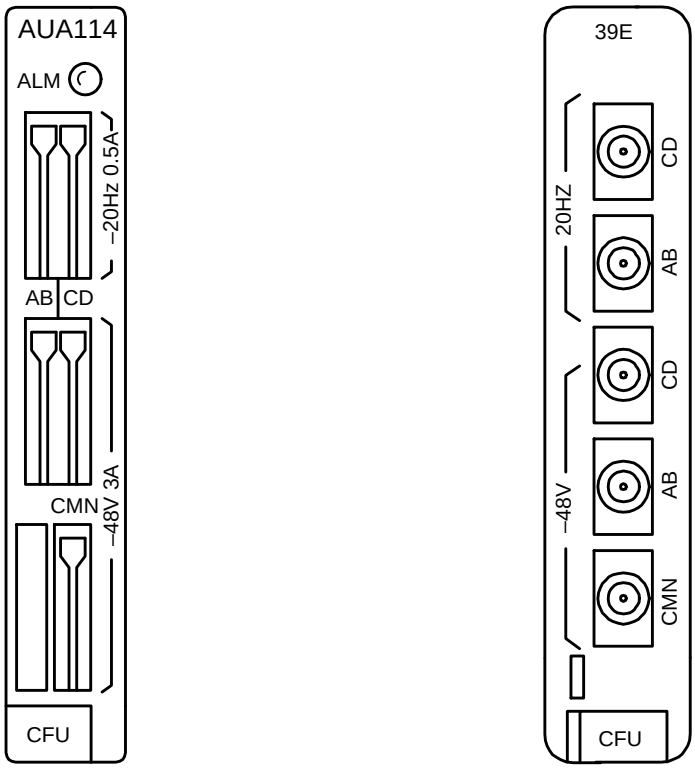


**Figure 1 – AUA114 and 39E Channel Fuse Unit**

2. Verify per Table A or Table B that fuse holders on faceplate of **CFU** contain correct value fuses and that fuses are not blown (fuse is blown when flag protrudes on faceplate). If a fuse is blown, use appropriate extractor tool (see Step 7) to replace fuse.

3. Install **CFU** into vacant **CFU** slot in upper or lower bank.

| Table A<br><br>AUA114 CFU Fuses | | | |
|---|---|---|---|
| **Fuse Designation** | **Bead Color** | **Size** | **Code** |
| 20 HZ - AB | Red | 1/2A | WP90247 L103 |
| 20 HZ - CD | Red | 1/2A | WP90247 L103 |
| –48V - AB | Blue | 3A | WP90247 L110 |
| –48V - CD | Blue | 3A | WP90247 L110 |
| –48V - CMN | Blue | 3A | WP90247 L110 |

| Table B<br><br>39E CFU Fuses | | | |
|---|---|---|---|
| **Fuse Designation** | **Bead Color** | **Size** | **Code** |
| 20 HZ - A/B | Red | 1/2A | 80G |
| 20 HZ - C/D | Red | 1/2A | 80G |
| –48V - A/B | Blue | 3A | 80C |
| –48V - C/D | Blue | 3A | 80C |
| –48V - CMN | Blue | 3A | 80C |

4. Does any fuse(s) in **CFU** blow?

   If **YES,** then proceed to Step **5.**
   If **NO,** then **STOP. YOU HAVE COMPLETED THIS PROCEDURE.**

5. Check wiring on dual bank assembly using SD-7C117-01 or SD-7C117-02 and SD-7C118-01 or SD-7C118-02 (Fiber-To-The-Home feature only).

6. Is wiring correct?

   If **YES,** then get another **CFU** and proceed to Step **2.**
   If **NO,** then continue with Step **7.**

7. Repair wiring and use **WP0247 L201** insertion/extraction tool for **AUA114 CFU**; or **WECO 553A** extractor tool (Techni-Tool No. 594TE170) or **WECO 319B** (KS-6305) extractor tool (Techni-Tool No. 490PL020) for **39E CFU**, to replace blown fuse(s).

# Option and Install AUB21 or AUB24 ADU

**SUMMARY:** Set the ADU options for the system configuration (positions 1,2,7, and 8) with AB and CD set to pre-service and unequipped (positions 3-6 open). Install ADU, then BCU and verify no alarms. Remove ADU and set AB (and CD if required) to equipped (positions 2 and 3). Reinstall ADU and disregard alarms.

1. Has the **BCU** been installed?

   If **NO,** then continue with Step **2.**
   If **YES,** then proceed to Step **7.**

2. Get one **AUB21** (Feature Package A) or **AUB24** (Feature Package B, Mode 1 or Mode 2) and inspect for possible damage.

3. Verify that fuse on **ADU** is not blown. If fuse is blown, get another **ADU** that contains a good fuse.

4. On **AUB21 or AUB24 ADU** option switch **S2** (Figure 1), use an orange stick (KS-6320, L1) or equivalent and set switch positions as follows:

   - **1** - Away from number for protection switching or toward number for no protection switching.
   - **2** - On **AUB21** away from number. On **AUB24** away from number, unless FPB Mode 2 (MC97771A1 BCU) application is being equipped (toward number).
   - **3** - Away from number.
   - **4** - Away from number.
   - **5** - Away from number.
   - **6** - away from number.
   - **7** - Away from number on **AUB24**. On **AUB21**, toward number if MISC1 is to report a major alarm or toward number if MISC1 is to report a minor alarm.

- **8** - On **AUB21**, toward number if MISC2 is to report a major alarm or away from number if MISC2 is to report a minor alarm. Unused on **AUB24**.

| AUB21 and AUB24 SWITCH SETTINGS | | |
|---|---|---|
| CLOSED | S2 | OPEN |
| NO PROTECTION | 1 | PROTECTION LINE |
| MODE 2 (AUA24 ONLY) | 2 | DS1 (AUA21)*; MODE 1 (AUA24 ONLY) |
| AB IN-SERVICE | 3 | AB PRE-SERVICE |
| CD IN-SERVICE | 4 | CD PRE-SERVICE |
| AB EQUIPPED | 5 | AB UNEQUIPPED |
| CD EQUIPPED | 6 | CD UNEQUIPPED |
| MJ ALARM-RT MISC1 (AUB21) | 7 | MN ALARM-RT MISC1 (AUB21) |
| 16 BIT ALARM FIELD (AUB24)† | | 13 BIT ALARM FIELD (AUB24)‡ |
| MJ ALARM-RT MISC2 (AUB21) | 8 | MN ALARM-RT MISC2 (AUB21) |
| UNUSED (AUB24) | | UNUSED (AUB24) |
| * Always set switch 2 on AUB21 to OPEN.<br>† Reserved for future use.<br>‡ Always set switch 7 on AUB24 to OPEN. | | |

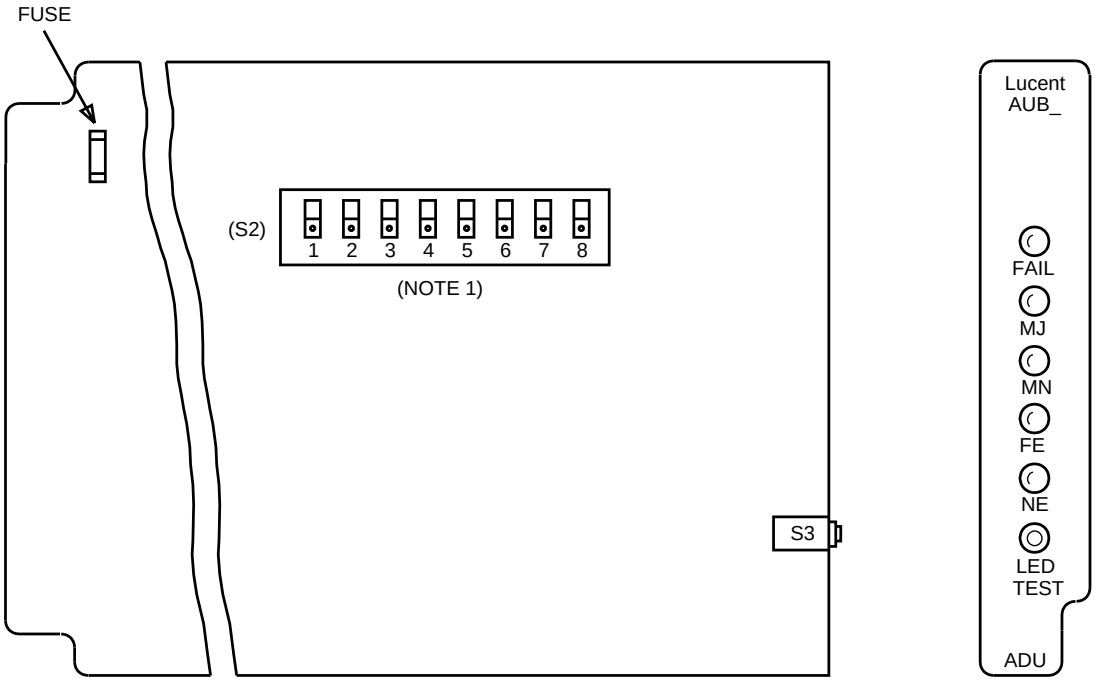


NOTE:
1. OPEN WHEN DEPRESSED AWAY FROM THE NUMBER
   CLOSED WHEN DEPRESSED TOWARDS THE NUMBER

**Figure 1 – AUB21 and AUB24 RT ADU Option Switch Settings**

5.

**CAUTION:**
*Incorrectly set ADU option switches may result in immediate or future loss of service or may introduce errors into the digital bitstream.*

Insert **ADU** into lower **ADU** slot if equipping blue bank or upper **ADU** slot if equipping white bank.

Response: Disregard all indicators that may be lighted.

6.

**NOTE:**
When the BCU is first installed, the ADU should be set for preservice and unequipped digroups (AB and CD) to verify these units (ADU and BCU) are functioning properly (all alarms clear).

Install BCU.

Reference: DLP-508

Response: After approximately 1 minute, all indicators will go off. MISC( ) may be lighted. Clear power shelf trouble is you have a MJ/MN NE alarm using 363-205-500 Maintenance TOP.

7.

**CAUTION:**
*Incorrect ADU option switch settings can cause service interruptions. Do not change any option switches except the ones listed for equipping digroups. For FPB Mode 1 systems, removing the ADU will interrupt service on digroup A. Therefore, this procedure requires that a Mode 1 system has all digroups equipped.*

**NOTE:**
If the ADU you are installing is a replacement, the system configuration (positions 1,2,7, and 8) options must be set as directed in the previous Steps.

Remove **ADU** (Figure 1) from bank being equipped.

8. Set switch **S2** positions **5** and **6** as follows:

- **5** - Toward the number (closed) to option digroup AB equipped.
- **6** - Toward the number (closed) to option digroup CD equipped (if required).

9. Has a **CTU** and/or **DTU** already been installed in the dual bank assembly?

   If **YES,** then continue with Step **10.**
   If **NO,** then proceed to Step **20.**

10.

   **NOTE:**
   This procedure assumes the TRU and LIU slots for the digroup(s) (AB or CD) being equipped have not been installed.

   **CAUTION:**
   *Incorrectly set ADU option switches may result in immediate or future loss of service or may introduce errors into the digital bitstream.*

   Reinstall **ADU** into **ADU** slot.

11. After approximately 15 seconds, are **ADU MJ** and **NE** and **BCU A, B DIGROUP** indicators lighted (**BCU C, D DIGROUP** indicators will also be lighted if CD digroups are in the preservice and equipped state)?

    If **YES,** then **STOP. YOU HAVE COMPLETED THIS PROCEDURE.**
    If **NO,** then continue with Step **12.**

12. Replace **BCU**.

13. After approximately 15 seconds, are **ADU MJ** and **NE** and **BCU A, B DIGROUP** indicators lighted (**BCU C, D DIGROUP** indicators will also be lighted if CD digroups are in the preservice and equipped state)?

    If **YES,** then **STOP. YOU HAVE COMPLETED THIS PROCEDURE.**
    If **NO,** then continue with Step **14.**

14. Replace **BCU** with **BCU** removed previously.

15. Remove **ADU** and check settings of switches on option switch **S2** per work order and Steps **4** and **8**.

16. Are switch settings on option switch correct?

    If **YES,** then continue with Step **17.**
    If **NO,** then proceed to Step **19.**

17. Get another **ADU** and use an orange stick (KS-6320, L1) or equivalent to set switches on option switch **S2** according to work order and Steps **4** and **8**.

18.

**CAUTION:**
*Incorrectly set ADU option switches may result in immediate or future loss of service or may introduce errors into the digital bitstream.*

Insert **ADU** into **ADU** slot in bank being equipped.

Response: After approximately 15 seconds **ADU MJ** and **NE** and **BCU A, B DIGROUP** indicators are lighted. **BCU C, D DIGROUP** indicators will also be lighted if CD digroups are in the preservice and equipped state.

**STOP. YOU HAVE COMPLETED THIS PROCEDURE.**

19. Set switches on option switch to correct position and repeat from Step **10.**

20.

**CAUTION:**
*Incorrectly set ADU option switches may result in immediate or future loss of service or may introduce errors into the digital bitstream.*

Reinstall **ADU** into **ADU** slot.

21. After approximately 15 seconds, are **FAIL**, **MN**, and **NE** indicators on **ADU** lighted?

    If **YES,** then **STOP. YOU HAVE COMPLETED THIS PROCEDURE.**
    If **NO,** then continue with Step **22.**

22. Replace **BCU**.

23. After approximately 15 seconds, are **FAIL**, **MN**, and **NE** indicators on **ADU** lighted?

    If **YES,** then **STOP. YOU HAVE COMPLETED THIS PROCEDURE.**
    If **NO,** then continue with Step **24.**

24. Replace **BCU** with **BCU** removed previously.

25. Remove **ADU** and check settings of switches on option switch **S2** per work order and Steps **4** and **8**.

26. Are switch settings on option switch correct?

    If **YES,** then continue with Step **27.**
    If **NO,** then proceed to Step **29.**

27. Get another **ADU** and set switches on option switch **S1 S2** according to work order and Steps **4** and **8**.

28. ⚠ **CAUTION:**
    *Incorrectly set ADU option switches may result in immediate or future loss of service or may introduce errors into the digital bitstream.*

    Insert **ADU** into **ADU** slot in bank being equipped.

    Response: After approximately 15 seconds, **FAIL**, **MN**, and **NE** indicators on **ADU** are lighted.

    **STOP. YOU HAVE COMPLETED THIS PROCEDURE.**

29. Correct setting of switches on option switch and repeat from Step **20.**

# Option and Install AUB27 ADU

**SUMMARY:** Set the ADU options for the system configuration (**S1** through **S11**) with AB and CD set to preservice and unequipped (S1 positions 3-6). Install ADU, then BCU and verify no alarms. Remove ADU and set AB (and CD if required) to equipped (positions 2 and 3). Reinstall ADU and disregard alarms.

1. Has the **BCU** been installed?

   If **NO,** then continue with Step **2.**
   If **YES,** then proceed to Step **12.**

2. Get one **AUB27** (Feature Package B, Feature Package C-AutoCut, or Feature Package F) and inspect for possible damage.

3. Verify that fuse on **ADU** is not blown. If fuse is blown, get another **ADU** that contains good fuse.

4. On **AUB27 ADU** option switch **S1** (Figure 1 and Table A), use an orange stick (KS-6320, L1) or equivalent and set switch positions as follows:

   - **1** - Toward **PL** for protection switching or toward **NPL** for no protection switching.
   - **2** - Toward **2** if system is FPB Mode 2. Otherwise, set it toward **4**.
   - **3** - Toward **ABP**.
   - **4** - Toward **CDP**.
   - **5** - Toward **ABU**.
   - **6** - Toward **CDU**.
   - **7** - Toward **1MJ** if MISC1 is to report a major alarm or toward **1MN** if MISC1 is to report a minor alarm.
   - **8** - Toward **2MJ** if MISC2 is to report a major alarm or toward **2MN** if MISC2 is to report a minor alarm.

| **Table A**<br>**AUB27 Switch Setting** | | |
|---|---|---|
| **Function** | **S1 Switch Position** | **Function** |
| No Protection Line (***NPL***) | 1 | Protection Line (***PL***) |
| Mode 2 Operation (***2***) | 2 | Mode 1 or FPC Operation (***4***) (Always Use ***4*** Unless Equipping FPB Mode 2) |
| AB In-Service (***ABI***) | 3 | AB Pre-Service (***ABP***) |
| CD In-Service (***CDI***) | 4 | CD Pre-Service (***CDP***) |
| AB Equipped (***ABE***) | 5 | AB Unequipped (***ABU***) |
| CD Equipped (***CDE***) | 6 | CD Unequipped (***CDU***) |
| Major Alarm for MISC1 (***1MJ***) | 7 | Minor Alarm for MISC1 (***1MN***) |
| Major Alarm for MISC2 (***2MJ***) | 8 | Minor Alarm for MISC1 (***2MN***) |
| **Function** | **S2 Switch Position** | **Function** |
| 16 Bit Alarm Field (***16***) | 1 | 13 Bit Alarm Field (***13***) (Always Use ***13***) |
| FS Framing (***FS***) * (Use ***FS*** for FPB Mode 1 or 2) | 2 | ESF Framing (***FE***) † (Use ***FE*** for FPC-AutoCut) |
| No Cutover Hunting (***NC***) (Use ***NC*** for Mode 1 and 2 or When FPC-AutoCut is in Pre-Service) | 3 | Cutover Enabled (***CUT***) (Only Use ***CUT*** When Establishing End-to-End FPC-AutoCut System) |
| (***SGL***) | 4 | (Always Use ***DBL***) |
| (***PA***) | 5 | (Always Use ***NPA***) |
| (***MJP***) | 6 | (Always Use ***MNP***) |
| **Function** | **S3 Switch Position** | **Function** |
| Data Link (***DL***) (Always Use ***DL***) | | No Data Link (***NDL***) |
| **Function** | **Clear Norm Position** | **Function** |
| Clear Provisioning (Use ***CLEAR*** When ADU is First Installed in New System) | | Do Not Clear Provisioning (Use ***NORM*** for In-Service System) |
| **S4, S5, S6, S7** | **Rotary Switches** | **S8, S9, S10, S11** |
| System ID Number | | (Always Set to 0) |
| * Use FS option for FPB Mode 1, Mode 2, and for integrated applications.<br>† Use FE option for FPC-AutoCut and FPC applications. | | |

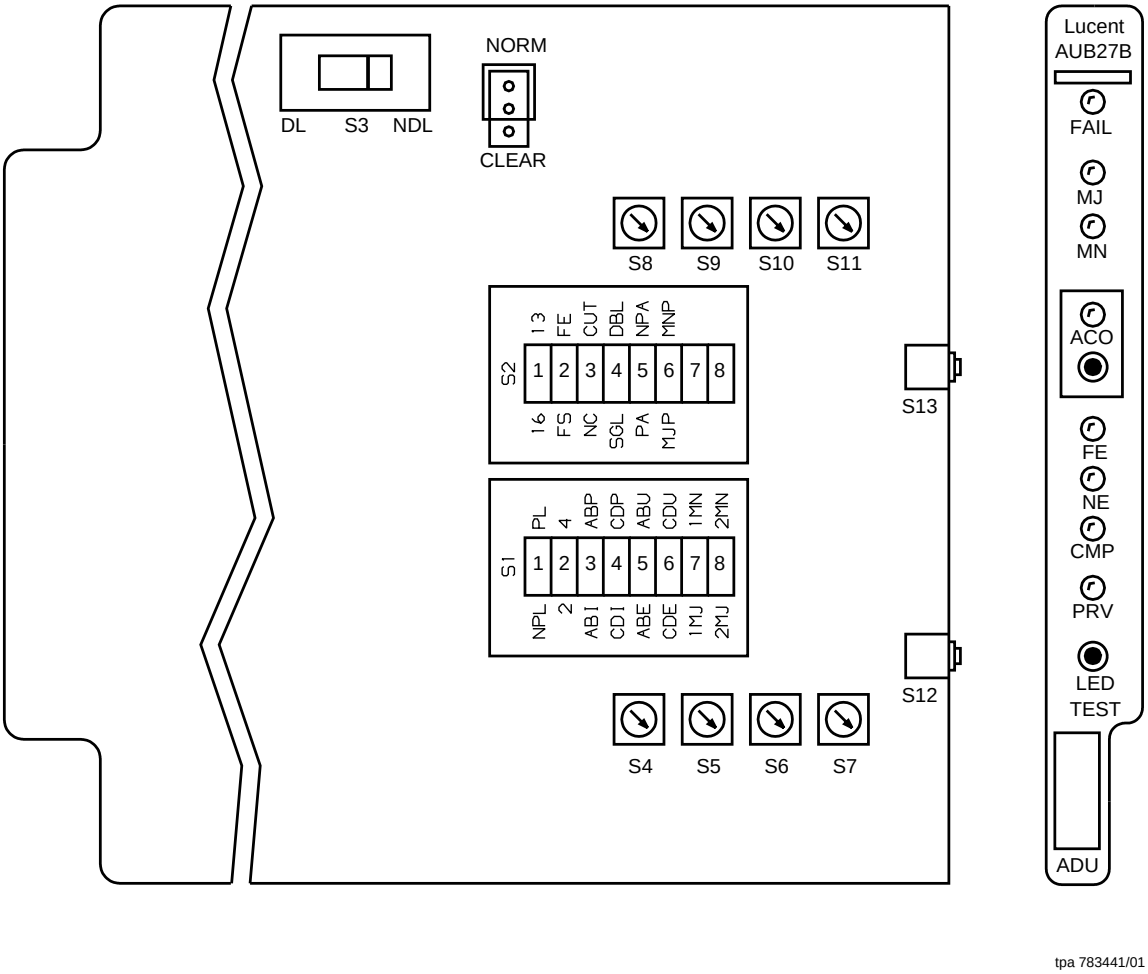


**Figure 1 – AUB27 RT ADU Option Switch Settings**

5. On **AUB27 ADU** option switch **S2** (Figure 1 and Table A), use an orange stick (KS-6320) or equivalent and set switches as follows:
   - **1 -** Toward **13**.
   - **2 -** Toward **FS** for FPB (Feature Package B Mode 1 or Mode 2) applications. Toward **FE** for Feature Package C-AutoCut or other applications.
   - **3 - Toward NC** for all preservice applications. (CUT is only used when an FPC-AutoCut RT is optioned for in-service when establishing end-to-end system)

**CAUTION:**
*FPB Mode 2 must be set to NC for **ADU FAIL, MN, NE,** and **CMP** alarms to clear.*

- **4 -** Toward **DBL**.
- **5 -** Toward **NPA**.
- **6 -** Toward **MNP**.
- **7 and 8 -** Unused.

6. Set switch **S3** toward **DL**.

7. Set system identification rotary switches **S4** (most significant digit) through **S7** (least significant digit) to bank ID number.

8. Set rotary switches **S8** through **S11** to **0**.

9.

**NOTE:**
The **NORM/CLEAR** switch option is used to automatically clear random channel provisioning data stored in the **ADU** and **BCU** when the **BCU** is installed by selecting **CLEAR**. After the **BCU** has been installed, the **NORM** position is used.

Set **NORM/CLEAR** option plug for **CLEAR** option (center and bottom pins).

10.

**CAUTION:**
*Incorrectly set ADU option switches may result in immediate or future loss of service or may introduce errors into the digital bitstream.*

Insert **ADU** into lower **ADU** slot if equipping blue bank or upper **ADU** slot if equipping white bank.

Response: Disregard all indicators that may be lighted.

11.

**NOTE:**
When the BCU is first installed, the ADU should be set for preservice and unequipped digroups (AB and CD) to verify these units (ADU and BCU) are functioning properly (all alarms clear).

Install BCU.

Reference: DLP-508

Response: After approximately 1 minute, all indicators will go off. MISC( ) may be lighted. Clear power shelf trouble if you have a MJ/MN NE alarm using 363-205-500 Maintenance TOP.

12.

**CAUTION:**
*Incorrect ADU option switch settings can cause service interruptions. Do not change any option switches except the ones listed for equipping digroups. For FPB Mode 1 systems, removing the ADU will interrupt service on digroup A. Therefore, this procedure requires that a Mode 1 system has all digroups equipped.*

**NOTE:**
If the ADU you are installing is a replacement, the system configuration (**S1** through **S11**) options must be set as directed in the previous Steps.

Remove **ADU** (Figure 1) from bank being equipped.

13. Set switch **S1** positions **5** and **6** as follows;
    - **5** - Toward **ABE** to option digroup(s) AB equipped.
    - **6** - Toward **CDE** to option digroup(s) CD equipped (if required).

14. Set **NORM/CLEAR** option plug for **NORM** option (center and top pins).

15. Have a **CTU** and/or **DTU** already been installed in the dual bank assembly?

    If **YES,** then continue with Step **16.**
    If **NO,** then proceed to Step **26.**

16.

**NOTE:**
This procedure assumes the TRU and LIU slots for the digroup(s) (AB or CD) being equipped have not been installed.

**CAUTION:**
*Incorrectly set ADU option switches may result in immediate or future loss of service or may introduce errors into the digital bitstream.*

Reinstall **ADU** into **ADU** slot.

17. After approximately 15 seconds, are **ADU MJ** and **NE** and **BCU A, B DIGROUP** indicators lighted (**BCU C, D DIGROUP** indicators will also be lighted if CD digroups are in the preservice and equipped state)?

    If **YES,** then **STOP. YOU HAVE COMPLETED THIS PROCEDURE.**
    If **NO,** then continue with Step **18.**

18. Replace **BCU**.

19. After approximately 15 seconds, are **ADU MJ** and **NE** and **BCU A, B DIGROUP** indicators lighted (**BCU C, D DIGROUP** indicators will also be lighted if CD digroups are in the preservice and equipped state)?

    If **YES,** then **STOP. YOU HAVE COMPLETED THIS PROCEDURE.**
    If **NO,** then continue with Step **20.**

20. Replace **BCU** with **BCU** removed previously.

21. Remove **ADU** and check settings of switches on option switch **S1** through **S11** per work order and Steps **4** through **8**.

22. Are switch settings on option switch correct?

    If **YES,** then continue with Step **23.**
    If **NO,** then proceed to Step **24.**

23. Get another **ADU** and use an orange stick (KS-6320, L1) or equivalent to set switches on option switches **S1** through **S11** according to work order and Steps **4** through **8**.

24. ⚠ **CAUTION:**
    *Incorrectly set ADU option switches may result in immediate or future loss of service or may introduce errors into the digital bitstream.*

    Insert **ADU** into **ADU** slot in bank being equipped.

    Response: After approximately 15 seconds **ADU MJ** and **NE** and **BCU A, B DIGROUP** indicators are lighted. **BCU C, D DIGROUP** indicators will also be lighted if CD digroups are in the preservice and equipped state.

    **STOP. YOU HAVE COMPLETED THIS PROCEDURE.**

25. Set switches on option switch to correct position and repeat from Step **16.**

26. ⚠ **CAUTION:**
    *Incorrectly set ADU option switches may result in immediate or future loss of service or may introduce errors into the digital bitstream.*

    Reinstall **ADU** into **ADU** slot.

27. After approximately 15 seconds, are **FAIL**, **MN**, and **NE** indicators on **ADU** lighted?

    If **YES,** then **STOP. YOU HAVE COMPLETED THIS PROCEDURE.**
    If **NO,** then continue with Step **28.**

28. Replace **BCU**.

29. After approximately 15 seconds, are **FAIL**, **MN**, and **NE** indicators on **ADU** lighted?

    If **YES,** then **STOP. YOU HAVE COMPLETED THIS PROCEDURE.**
    If **NO,** then continue with Step **30.**

30. Replace **BCU** with **BCU** removed previously.

31. Remove **ADU** and check settings of switches **S1** through **S11** per work order and Steps **4** through **8**.

32. Are switch settings on option switch correct?

    If **YES,** then continue with Step **33.**
    If **NO,** then proceed to Step **35.**

33. Get another **ADU** and set switches on option switch **S1** through **S11** per work order and Steps **4** through **8**.

34. **CAUTION:**
    *Incorrectly set ADU option switches may result in immediate or future loss of service or may introduce errors into the digital bitstream.*

    Insert **ADU** into **ADU** slot in bank being equipped.

    Response: After approximately 15 seconds, **FAIL**, **MN**, and **NE** indicators on **ADU** are lighted.

    **STOP. YOU HAVE COMPLETED THIS PROCEDURE.**

35. Correct setting of switches on option switch and repeat from Step **26.**

# Option and Install AUB26 ADU

**SUMMARY:** Set the ADU options for the system configuration (positions 1,2,7, 8, and 9) with AB and CD set to pre-service and unequipped (positions 3-6 open). Install ADU, then BCU and verify no alarms. Remove ADU and set AB (and CD if required) to equipped (positions 2 and 3). Reinstall ADU and disregard alarms.

1. Has the **BCU** been installed?

   If **NO,** then continue with Step **2.**
   If **YES,** then proceed to Step **7.**

2. Get one **AUB26** (Feature Package C or Feature Package D) and inspect for possible damage.

3. Verify that fuse on **ADU** is not blown. If fuse is blown, get another **ADU** that contains good fuse.

4. On **AUB26 ADU** option switch **S1** (Figure 1), use an orange stick (KS-6320, L1) or equivalent and set switch positions as follows:

   - **1** - Toward **PL** for protection switching or toward **NPL** for no protection switching.
   - **2** - Toward **32** if system is FPD. Otherwise, set it toward **64**.
   - **3** - Toward **ABP**.
   - **4** - Toward **CDP**.
   - **5** - Toward **ABU**.
   - **6** - Toward **CDU**.
   - **7** - Toward **1MJ** if MISC1 is to report a major alarm or toward **1MN** if MISC1 is to report a minor alarm.
   - **8** - Toward **2MJ** if MISC2 is to report a major alarm or toward **2MN** if MISC2 is to report a minor alarm.
   - **9** - Toward **D4**.
   - **10** - Toward **D4**.

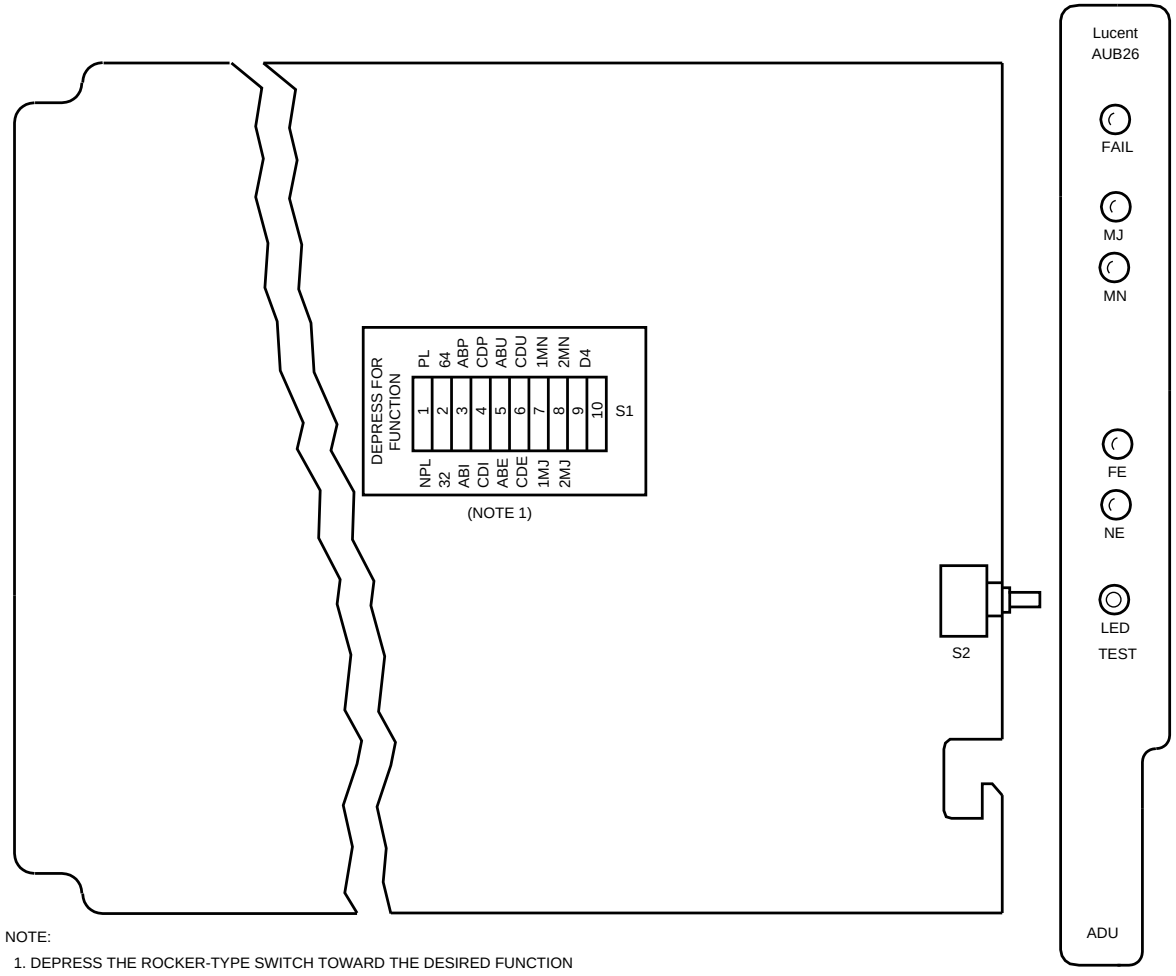


NOTE:

1. DEPRESS THE ROCKER-TYPE SWITCH TOWARD THE DESIRED FUNCTION

**Figure 1 – AUB26 RT ADU Option Switch Settings**

5.

**CAUTION:**
*Incorrectly set ADU option switches may result in immediate or future loss of service or may introduce errors into the digital bitstream.*

Insert **ADU** into lower **ADU** slot if equipping blue bank or upper **ADU** slot if equipping white bank.

Response: Disregard all indicators that may be lighted.

6.

**NOTE:**
When the BCU is first installed, the ADU should be set for pre-service and unequipped digroups (AB and CD) to verify these units (ADU and BCU) are functioning properly (all alarms clear).

Install BCU.

Reference: DLP-508

Response: After approximately 1 minute, all indicators will go off. MISC( ) may be lighted. Clear power shelf trouble is you have a MJ/MN NE alarm using 363-205-500 Maintenance TOP.

7.

**CAUTION:**
*Incorrect ADU option switch settings can cause service interruptions. Do not change any option switches except the ones listed for equipping digroups.*

**NOTE:**
If the ADU you are installing is a replacement, the system configuration (positions 1,2,7, and 8) options must be set as directed in the previous Steps.

Remove **ADU** (Figure 1) from bank being equipped.

8. Set switch **S1** positions **5** and **6** as follows:

- **5** - Toward **ABE** to option digroup(s) AB equipped.
- **6** - Toward **CDE** to option digroup(s) CD equipped (if required).

9. Have a **CTU** and/or **DTU** already been installed in the dual bank assembly?

If **YES,** then continue with Step **10.**
If **NO,** then proceed to Step **20.**

10.

**CAUTION:**
*Incorrectly set ADU option switches may result in immediate or future loss of service or may introduce errors into the digital bitstream.*

**NOTE:**
This procedure assumes the TRU and LIU slots for the digroup(s) (AB or CD) being equipped have not been installed.

Reinstall **ADU** into **ADU** slot.

11. After approximately 15 seconds, are **ADU MJ** and **NE** and **BCU A, B DIGROUP** indicators lighted (**BCU C, D DIGROUP** indicators will also be lighted if CD digroups are in the preservice and equipped state)?

    If **YES,** then **STOP. YOU HAVE COMPLETED THIS PROCEDURE.**
    If **NO,** then continue with Step **12.**

12. Replace **BCU**.

13. After approximately 15 seconds, are **ADU MJ** and **NE** and **BCU A, B DIGROUP** indicators lighted (**BCU C, D DIGROUP** indicators will also be lighted if CD digroups are in the preservice and equipped state)?

    If **YES,** then **STOP. YOU HAVE COMPLETED THIS PROCEDURE.**
    If **NO,** then continue with Step **14.**

14. Replace **BCU** with **BCU** removed previously.

15. Remove **ADU** and check settings of switches on option switch **S1** per work order and Steps **4** and **8**.

16. Are switch settings on option switch correct?

    If **YES,** then continue with Step **17.**
    If **NO,** then proceed to Step **19.**

17. Get another **ADU** and use an orange stick (KS-6320, L1) or equivalent to set switches on option switch **S1** according to work order and Steps **4** and **8**.

18.

**CAUTION:**
*Incorrectly set ADU option switches may result in immediate or future loss of service or may introduce errors into the digital bitstream.*

Insert **ADU** into **ADU** slot in bank being equipped.

Response: After approximately 15 seconds **ADU MJ** and **NE** and **BCU A, B DIGROUP** indicators are lighted. **BCU C, D DIGROUP** indicators will also be lighted if CD digroups are in the preservice and equipped state.

**STOP. YOU HAVE COMPLETED THIS PROCEDURE.**

19. Set switches on option switch to correct position and repeat from Step **10.**

20.

**CAUTION:**
*Incorrectly set ADU option switches may result in immediate or future loss of service or may introduce errors into the digital bitstream.*

Reinstall **ADU** into **ADU** slot.

21. After approximately 15 seconds, are **FAIL**, **MN**, and **NE** indicators on **ADU** lighted?

    If **YES,** then **STOP. YOU HAVE COMPLETED THIS PROCEDURE.**
    If **NO,** then continue with Step **22.**

22. Replace **BCU**.

23. After approximately 15 seconds, are **FAIL**, **MN**, and **NE** indicators on **ADU** lighted?

    If **YES,** then **STOP. YOU HAVE COMPLETED THIS PROCEDURE.**
    If **NO,** then continue with Step **24.**

24. Replace **BCU** with **BCU** removed previously.

25. Remove **ADU** and check settings of switches on option switch **S1** per work order and Steps **4** and **8**.

26. Are switch settings on option switch correct?

    If **YES,** then continue with Step **27.**
    If **NO,** then proceed to Step **29.**

27. Get another **ADU** and set switches on option switch **S1** according to work order and Steps **4** and **8**.

28.

**CAUTION:**
*Incorrectly set ADU option switches may result in immediate or future loss of service or may introduce errors into the digital bitstream.*

Insert **ADU** into **ADU** slot in bank being equipped.

Response: After approximately 15 seconds, **FAIL**, **MN**, and **NE** indicators on **ADU** are lighted.

**STOP. YOU HAVE COMPLETED THIS PROCEDURE.**

29. Correct setting of switches on option switch and repeat from Step **20.**

# Install Bank Control Unit (BCU)

**Summary:** With the ADU option for preservice and unequipped, install the BCU and verify all alarms clear in 1 minute or less (MISC alarms may be lighted). If not check the ADU options, then replace ADU and/or BCU. If you have ADU MJ/MN NE alarms (no FAIL), clear power shelf trouble (ringing generators, fuse units, power units, ...) before continuing (use 363-205-500 Maintenance TOP).

1.

**NOTE:**
The **MC97726A1 BCU** is rated discontinued availability; any units remaining in the field should be returned for an upgrade per customer information release (CIR) 363-099-072.

Get one **MC97723A1** (Feature Package A) (rated discontinued availability), **MC97724A1** (Feature Package B), **MC97756A1** (Feature Package C or D), **MC97771A1** or **MC97776A1( )** (Feature Package B Mode 1 and Mode 2, or Feature Package C-AutoCut) **MC97779A1** (Feature Package F) **BCU** (Figure 1), as required, and inspect for possible damage.

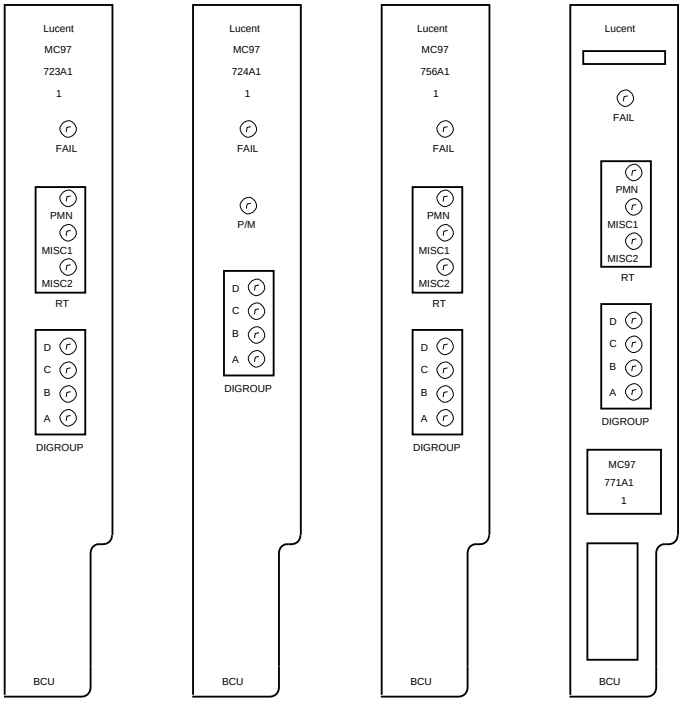


**Figure 1 – Typical RT BCU Faceplates**

2.

**NOTE:**
The **MC97771A1** or **MC97776A1( ) BCU** can be used for FPB (Feature Package B Mode 1 or Mode 2) or Feature Package C-AutoCut operation depending on the choice of **ADU** circuit packs and how the **ADU** options are set. The **MC97779A1 BCU** is required for FPF (Feature Package F)." requires the ADU to be

**NOTE:**
**MISC1** or **MISC2** indicator on **BCU** will light if either one is connected to open door closure alarm. Deactivate miscellaneous alarm.

Insert **BCU** into lower **BCU** slot if equipping blue bank or upper **BCU** slot if equipping white bank.

Response: Ignore initial transient alarm indications (typically **FAIL** LEDs light on the **BCU**, **ADU**, and **CTU** if installed). Within 1 minute all alarms clear.

3. Did all indicators go off within 1 minute?

If **YES,** then **STOP. YOU HAVE COMPLETED THIS PROCEDURE.**
If **NO,** then continue with Step **4.**

Comment: Clear power shelf trouble if you have alarm indicators other than FAIL (use 363-205-500 Maintenance TOP) before continuing with the turn up procedures.

4. Is **BCU FAIL** indicator off?

If **YES,** then continue with Step **5.**
If **NO,** then proceed to Step **12.**

5.

**CAUTION:**
*Incorrectly set ADU option switches may result in immediate or future loss of service or may introduce errors into the digital bitstream.*

Replace **ADU**.

Reference: DLP-505, DLP-506, DLP-507

6. Did all indicators go off within 1 minute?

   If **YES,** then **STOP. YOU HAVE COMPLETED THIS PROCEDURE.**
   If **NO,** then continue with Step **7.**

   Comment: Clear power shelf trouble if you have alarm indicators other than FAIL (use 363-205-500 Maintenance TOP) before continuing with the turn up procedures.

7. **CAUTION:**
   *Incorrectly set ADU option switches may result in immediate or future loss of service or may introduce errors into the digital bitstream.*

   Replace **ADU** with **ADU** removed previously.

8. Replace **BCU**.

9. Did all indicators go off within 1 minute?

   If **YES,** then **STOP. YOU HAVE COMPLETED THIS PROCEDURE.**
   If **NO,** then continue with Step **10.**

   Comment: Clear power shelf trouble if you have alarm indicators other than FAIL (use 363-205-500 Maintenance TOP) before continuing with the turn up procedures.

10. Replace **BCU** with **BCU** removed previously.

11. Check wiring using SD-7C117-01 or SD-7C117-02. Repeat procedure from Step **2** after locating and correcting trouble.

12. Replace **BCU**.

13. Did all indicators go off within 1 minute?

    If **YES,** then **STOP. YOU HAVE COMPLETED THIS PROCEDURE.**
    If **NO,** then continue with Step **14.**

    Comment: Clear power shelf trouble if you have alarm indicators other than FAIL (use 363-205-500 Maintenance TOP) before continuing with the turn up procedures.

14. Replace **BCU** with one removed previously.

15.

**CAUTION:**
*Incorrectly set ADU option switches may result in immediate or future loss of service or may introduce errors into the digital bitstream.*

Replace **ADU**.

Reference: DLP-505, DLP-506, DLP-507

16. Did all indicators go off within 1 minute?

If **YES,** then **STOP. YOU HAVE COMPLETED THIS PROCEDURE.**
If **NO,** then continue with Step **17.**

Comment: Clear power shelf trouble if you have alarm indicators other than FAIL (use 363-205-500 Maintenance TOP) before continuing with the turn up procedures.

17.

**CAUTION:**
*Incorrectly set ADU option switches may result in immediate or future loss of service or may introduce errors into the digital bitstream.*

Replace **ADU** with **ADU** removed previously and check wiring using SD-7C117-01 or SD-7C117-02. Repeat procedure from Step **2** after locating and correcting trouble.

# Install and Test Power Converter Unit (PCU) in AB Shelf

**SUMMARY:** Install **PCU** into AB shelf and verify that **FAIL** indicator is off. Measure –42 to –56 V DC at **PCU** faceplate.

1. Get one **PCU** (**AUA11**, **AUA11B**, or **AUA11C**) and inspect for possible damage.

2. Have a **CTU** and/or a **DTU** already been installed in the dual bank assembly?

   If **YES,** then continue with Step **3.**
   If **NO,** then proceed to Step **4.**

3. Insert **PCU** into AB (lower) shelf **PCU** slot of channel bank.

   Response: **ADU MJ** and **NE** and **BCU A, B DIGROUP** indicators are lighted and **PCU FAIL** indicator is off. **BCU C, D DIGROUP** indicators will also be lighted if CD digroups are in the preservice and equipped state.

   Proceed to Step **5.**

4. Insert **PCU** into AB (lower) shelf **PCU** slot of channel bank.

   Response: **MN**, **NE**, and **FAIL** indicators on **ADU** are lighted and **FAIL** indicator on **PCU** is off.

5. Is **PCU FAIL** indicator off?

   If **YES,** then proceed to Step **10.**
   If **NO,** then continue with Step **6.**

6. Replace **PCU**.

7. Does **FAIL** indicator on **PCU** light and remain lighted?

   If **YES,** then continue with Step **8.**
   If **NO,** then proceed to Step **10.**

8. Replace **PCU** with **PCU** removed previously.

9. Use SD-7C117-01 or SD-7C117-02 to check wiring. Repeat procedure from Step **2** after locating and correcting trouble.

10. Condition DMM to measure volts DC.

11. On **PCU** faceplate, connect DMM test leads to **GND** jack and –**48** jack.

12. Does DMM indicate between –42 and –56 volts?

    If **YES,** then proceed to Step **26.**
    If **NO,** then continue with Step **13.**

13. Verify that wiring from power shelf to **PCU** in AB shelf is present and connected properly.

14. Is wiring present and connected properly?

    If **YES,** then proceed to Step **16.**
    If **NO,** then continue with Step **15.**

15. Resolve problems through local procedures. Repeat procedure from Step **2** after locating and correcting trouble.

16. Is system being equipped with FTTH (Fiber-To-The-Home) feature?

    If **YES,** then continue with Step **17.**
    If **NO,** then proceed to Step **20.**

17. At **BFU3** or **BFU4** in optics power shelf, is fuse –**48 WHITE**, –**48 BLUE**, or –**48 CMN** blown?

    If **YES,** then continue with Step **18.**
    If **NO,** then proceed to Step **20.**

18. Replace blown fuse(s).

19. Does fuse(s) blown again?

    If **YES**, then continue with Step **25**.
    If **NO**, then proceed to Step **11**.

20. Replace **PCU**.

21. Is **FAIL** indicator on **PCU** off?

    If **YES,** then continue with Step **22.**
    If **NO,** then proceed to Step **6.**

22. On **PCU** faceplate, connect DMM test leads to **GND** jack and –**48** jack.

23. Does DMM indicate between –42 and –56 volts?

    If **YES,** then proceed to Step **26.**
    If **NO,** then continue with Step **24.**

24. Replace **PCU** with **PCU** removed previously.

25. Check wiring using SD-7C117-01 or SD-7C117-02 and, if system is being equipped with FTTH feature, also use SD-7C118-02 and SD-7C150-01. Repeat procedure from Step **2** after locating and correcting trouble.

26. Disconnect DMM test leads.

    **STOP. YOU HAVE COMPLETED THIS PROCEDURE.**

# Install Transmit/Receive Unit (TRU) in AB Shelf

1. Get one compatible version **TRU** and inspect for possible damage.

   Reference: DLP-500

2. Insert **TRU** into **TRU** slot located in AB (lower) shelf of channel bank while observing indicators on **TRU** faceplate.

   Response: **TRU FAIL** indicator lights momentarily, **ADU MJ** and **NE** indicators are lighted, and **DIGROUP A, B** indicators on **BCU** are lighted. **DIGROUP C, D** indicators on **BCU** will also be lighted if CD digroups are in preservice/equipped state. **AUA105 SPL** indicator will light momentarily for Mode 2 applications.

3. Did **FAIL** indicator on **TRU** light momentarily?

   If **YES,** then proceed to Step **8.**
   If **NO,** then continue with Step **4.**

4. Replace **TRU**.

5. Did **FAIL** indicator on **TRU** light momentarily?

   If **YES,** then proceed to Step **8.**
   If **NO,** then continue with Step **6.**

6. Replace **TRU** with **TRU** removed previously.

7. Check wiring between **PCU** and **TRU** using SD-7C117-01 or SD-7C117-02. Repeat procedure from Step **2** after locating and correcting trouble.

8. Did **FAIL** indicator on **TRU** go off and remain off?

   If **YES,** then proceed to Step **20.**
   If **NO,** then continue with Step **9.**

9. Replace **TRU** in AB shelf.

10. Insert **TRU** into **TRU** slot located in AB (lower) shelf of channel bank while observing indicators on **TRU** faceplate.

    Response: **TRU FAIL** indicator lights momentarily, **ADU MJ** and **NE** indicators are lighted, and **DIGROUP A, B** indicators on **BCU** are lighted. **DIGROUP C, D** indicators on **BCU** will also be lighted if CD digroups are in preservice/equipped state. **AUA105 SPL** indicator will light momentarily for Mode 2 applications.

11. Does **FAIL** indicator on **TRU** go off and remain off?

    If **YES,** then proceed to Step **20.**
    If **NO,** then continue with Step **12.**

12. Remove **ADU** and check option switch **S1** (**AUB26** or **AUB27**) or **S2** (**AUB21** or **AUB24**) for correct settings.

    Reference: DLP-505, DLP-506, DLP-507

13. Are option switch settings on **ADU** correct?

    If **YES,** then proceed to Step **16.**
    If **NO,** then continue with Step **14.**

14. ⚠ **CAUTION:**
    *Incorrectly set ADU option switches may result in immediate or future loss of service or may introduce errors into the digital bitstream.*

    Change **ADU** option switch(es) to correct position and reinsert **ADU** into **ADU** slot.

15. Replace **TRU** with **TRU** removed previously and repeat from Step **2.**

16. ⚠ **CAUTION:**
    *Incorrectly set ADU option switches may result in immediate or future loss of service or may introduce errors into the digital bitstream.*

    Replace **ADU** with correctly optioned **ADU**.

    Reference: DLP-505, DLP-506, DLP-507

17. Replace **TRU** with **TRU** removed previously while observing indicators on **TRU** faceplate.

18. Does **FAIL** indicator on **TRU** go off and remain off?

    If **YES,** then proceed to Step **20.**
    If **NO,** then continue with Step **19.**

19. ⚠ **CAUTION:**
    *Incorrectly set ADU option switches may result in immediate or future loss of service or may introduce errors into the digital bitstream.*

    Replace **ADU** with **ADU** removed previously and check wiring using SD-7C117-01 or SD-7C117-02. Repeat procedure from Step **2** after locating and correcting trouble.

20. Is **FAIL** indicator on **BCU** off?

    If **YES,** then **STOP. YOU HAVE COMPLETED THIS PROCEDURE.**
    If **NO,** then continue with Step **21.**

21. Replace **BCU**.

22. After approximately 15 seconds, is **FAIL** indicator on **BCU** off?

    If **YES,** then **STOP. YOU HAVE COMPLETED THIS PROCEDURE.**
    If **NO,** then continue with Step **23.**

23. Replace **BCU** with **BCU** removed previously.

24. Replace **TRU** in AB shelf and repeat from Step **2.**

# Install Transcoder Unit (TCU)

1. Get one TCU (**AUA71**) and inspect for possible damage.

2. Insert **TCU** into appropriate **LIU-B** or **LIU-D** slot (left side for blue bank or right side for white bank) in facility shelf while observing **FAIL** indicator on **TCU** faceplate.

   Response: **TCU FAIL** indicator lights momentarily. Other indicators remain the same.

3. Did **FAIL** indicator on **TCU** light momentarily?

   If **YES,** then proceed to Step **16.**
   If **NO,** then continue with Step **4.**

4. Replace **TCU** while observing **FAIL** indicator on **TCU** faceplate.

5. Did **FAIL** indicator on **TCU** light momentarily?

   If **YES,** then proceed to Step **16.**
   If **NO,** then continue with Step **6.**

6. Replace **TRU** in AB shelf.

7. Replace **TCU** with **TCU** removed previously while observing **FAIL** indicator on **TCU** faceplate.

8. Did **FAIL** indicator on **TCU** light momentarily?

   If **YES,** then proceed to Step **16.**
   If **NO,** then continue with Step **9.**

9. Unseat **TCU**.

10. Replace **TRU** in AB shelf with **TRU** removed previously.

11.

**CAUTION:**
*Incorrectly set ADU option switches may result in immediate or future loss of service or may introduce errors into the digital bitstream.*

Replace **ADU** with a correctly optioned **ADU**.

Reference: DLP-505, DLP-506, DLP-507

12. Wait 20 seconds and then reseat **TCU** while observing **FAIL** indicator on **TCU** faceplate.

13. Did **FAIL** indicator on **TCU** light momentarily?

    If **YES,** then proceed to Step **16.**
    If **NO,** then continue with Step **14.**

14.

**CAUTION:**
*Incorrectly set ADU option switches may result in immediate or future loss of service or may introduce errors into the digital bitstream.*

Replace **ADU** with **ADU** removed previously.

15. Check wiring between **PCU** in AB shelf and **TCU** using SD-7C117-02. Repeat procedure from Step **2** after locating and correcting trouble.

16. Did **FAIL** indicator on **TCU** go off and remain off?

    If **YES,** then **STOP. YOU HAVE COMPLETED THIS PROCEDURE.**
    If **NO,** then continue with Step **17.**

17. Replace **TCU** while observing **FAIL** indicator on **TCU** faceplate.

18. Did **FAIL** indicator on **TCU** go off and remain off?

    If **YES,** then **STOP. YOU HAVE COMPLETED THIS PROCEDURE.**
    If **NO,** then continue with Step **19.**

19. Replace **TCU** with **TCU** removed previously.

20. Check wiring using SD-7C117-02. Repeat procedure from Step **2** after locating and correcting trouble.

# Install Line Interface Unit (LIU)

**SUMMARY:** Set option switches located on side of **LIU** circuit board. Insert **LIU** into facility shelf in appropriate **LIU** slot. Verify that **FAIL** indicator on **LIU** lights momentarily and then goes off and remains off.

1.

**CAUTION:**
*An **AUA62**, **AUA62B**, **AUA62C**, or **AUA62D** (line powering) **LIU** should not be installed in any SLC Series 5 carrier system dual bank assembly that is used in conjunction with a lightwave multiplexer.*

**CAUTION:**
*Incorrectly set LIU option switches may result in immediate or future loss of service or may introduce errors into the digital bitstream. All LIUs in the same bank should have identical option switch settings.*

Get one **LIU** (Figure 1, Figure 2, or Figure 3) and inspect for possible damage.

2. Is **LIU AUA61**, **AUA61B**, **AUA61C** or **AUA61D** being installed in the channel bank?

   If **YES,** then continue with Step **3.**
   If **NO,** then proceed to Step **6.**

3. Using an orange stick (KS-6320, L1) or equivalent, set equalizer switches **S400** on **LIU AUA61/AUA61B** or **S2** on **LIU AUA61C** or **AUA61D** per work order (Table A).

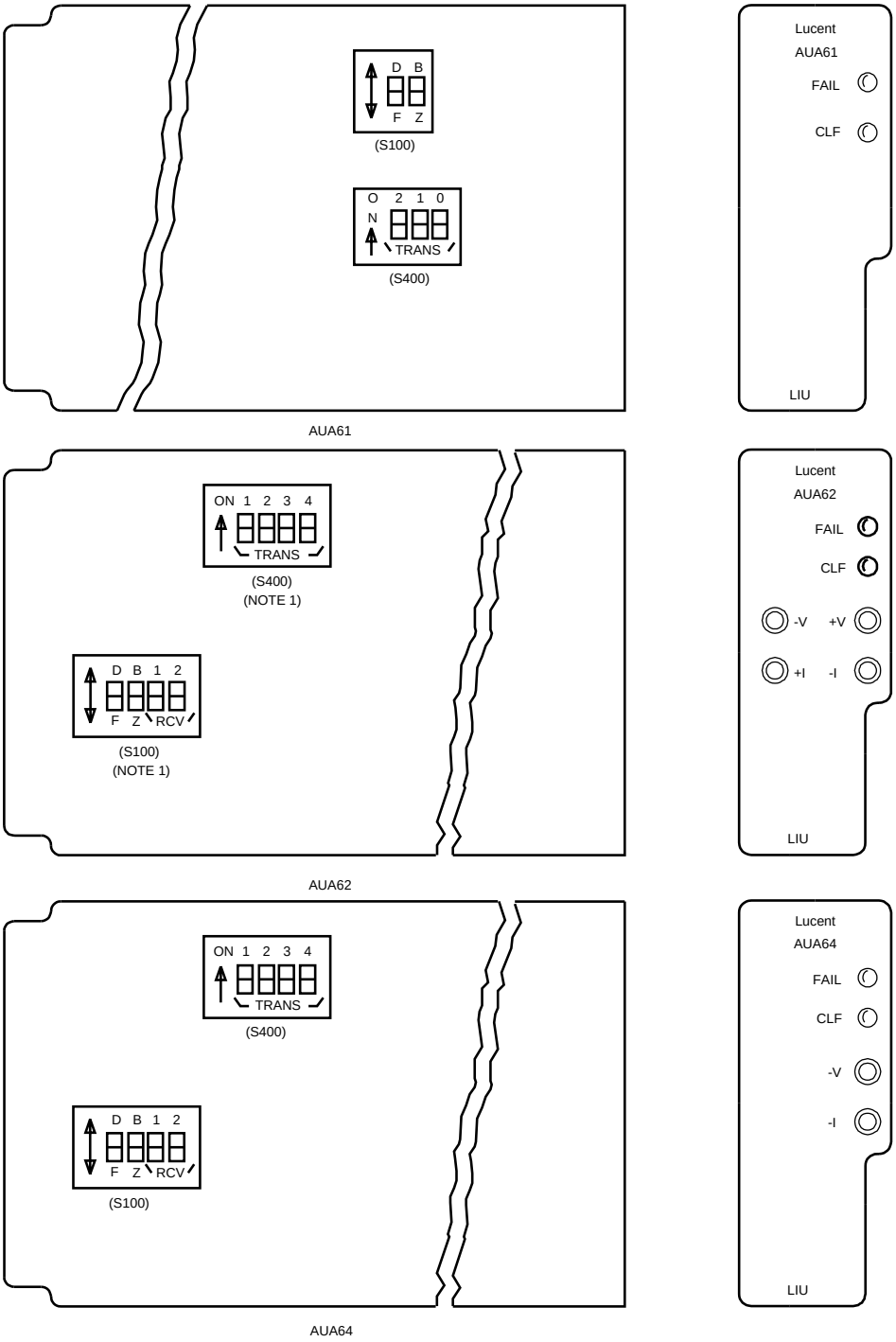


NOTE: 1. AUA62 HAS A DAUGHTER BOARD. HOWEVER, S100 AND S400 ARE ACCESSIBLE THROUGH HOLES IN THE DAUGHTER BOARD.

**Figure 1 – AUA61, AUA62, and AUA64 LIU Option Switches**

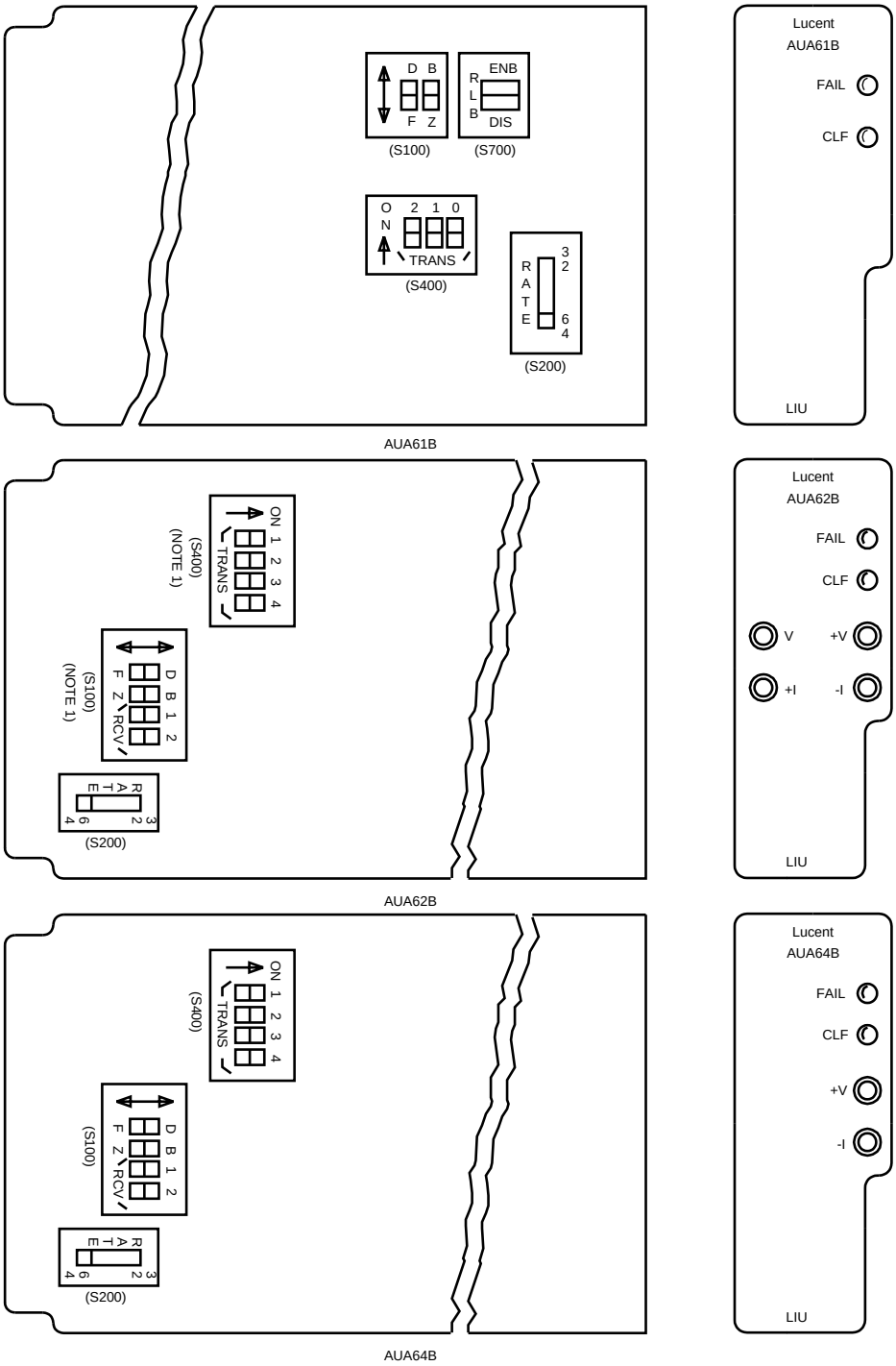


NOTE 1: AUA62B HAS A DAUGHTER BOARD. HOWEVER, S100 AND S400 ARE ACCESSIBLE THROUGH HOLES IN THE DAUGHTER BOARD.

**Figure 2 – AUA61B, AUA62B, and AUA64B LIU Option Switches**

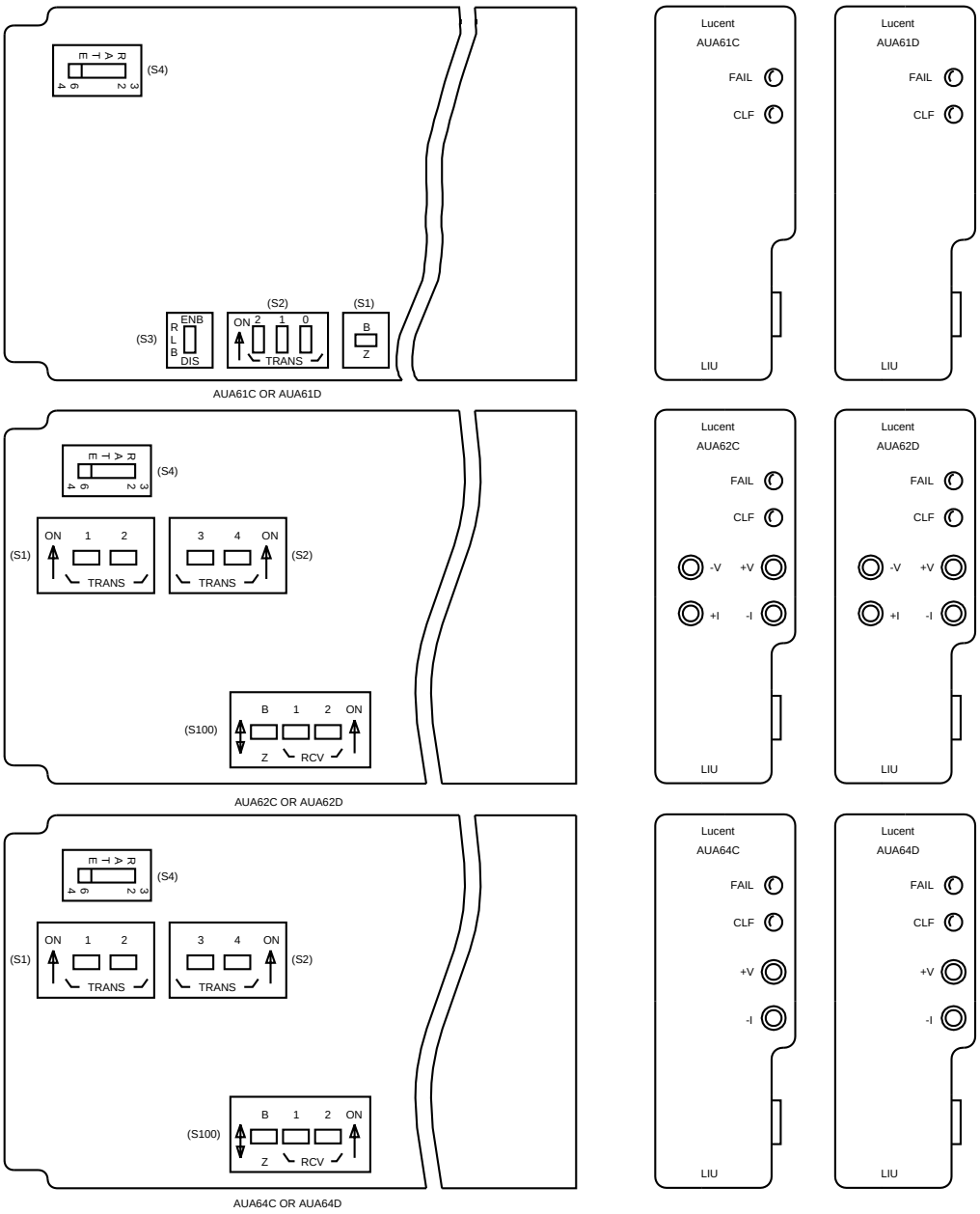


**Figure 3 – AUA61C/AUA61D, AUA62C/AUA62D, and AUA64C/AUA64D LIU Option Switches**

| Table A<br>AUA61( )<br>LIU Equalizer Settings | | | |
|---|---|---|---|
| **Distance to DSX-1** | **Equalizer Switch (S400/S2) Setting** | | |
| **(Feet)** | **2** | **1** | **0** |
| 0-132 | OFF | OFF | ON |
| 133-265 | OFF | ON | OFF |
| 266-398 | OFF | ON | ON |
| 399-532 | ON | OFF | OFF |
| 533-655 | ON | OFF | ON |

4. Is **LIU** an **AUA61B**, **AUA61C** or **AUA61D**?

   If **YES,** then continue with Step **5.**
   If **NO,** then proceed to Step **7.**

5. Set loopback enable/disable switch (**S700** or **S3**) to **ENB** if the channel bank is connected to a DDM-1000 or DDM-2000 Multiplexer; otherwise, set it to the **DIS** position. Proceed to Step **7.**

6. Using an orange stick (KS-6320, L1) or equivalent, set transmit and receive pad switches on **LIU** per work order (Table B).

| Table B<br>AUA62( ) and AUA64( ) LIU Transmit/Receive Pad Setting | | | | | | |
|---|---|---|---|---|---|---|
| **Inserted Loss** | **Transmit Pad (S400/S1, S2) Switch Settings** | | | | **Receive Pad (S100) Switch Settings** | |
| **(dB)** | **1** | **2** | **3** | **4** | **1** | **2** |
| 22.5 | OFF | OFF | OFF | ON | — | — |
| 15.0 | OFF | OFF | ON | OFF | — | — |
| 7.5 | OFF | ON | OFF | OFF | OFF | ON* |
| 0 | ON | OFF | OFF | OFF | ON* | OFF |
| * ON when depressed toward the numbers. | | | | | | |

7.

**CAUTION:**
*Line coding on the digital facility and terminal equipment interfaces MUST BE THE SAME or service interruptions will result. Lucent Technologies recommends ZCS (also called AMI) option Z be used unless B8ZS option B is specified in the work order.*

**NOTE:**
Framing format switches are not present on **AUA61C** or **AUA61D**, **AUA62C** or **AUA62D**, and **AUA64C** or **AUA64D LIU**s.

Using an orange stick (KS-6320, L1) or equivalent, set line coding and framing format switches on **LIU** per work order (Table C).

**Table C**
**LIU Line Coding and Framing Format Switch Settings**

| Option Description | LIU Switch (S1/S100) Settings |
|---|---|
| B8ZS Coding | B |
| ZCS Coding | Z† |
| ESF (Fe) Framing Format* | F |
| Fs Framing Format* | D‡ |

* Not present on AUA61C/D, AUA62C/D, or AUA64C/D LIUs.
† Use Z for FPB and FPC-AutoCut applications.
‡ Feature Package B (FPB) use only.

8. Is **LIU AUA61B**, **AUA61C** or **AUA61D**, **AUA62B**, **AUA62C** or **AUA62D**, **AUA64B**, or **AUA64C** or **AUA64D** being installed in the channel bank?

   If **YES,** then continue with Step **9.**
   If **NO,** then proceed to Step **12.**

9. Is **LIU** being installed in the channel bank assembly equipped for FPD capability?

   If **YES,** then proceed to Step **11.**
   If **NO,** then continue with Step **10.**

10. Set channel PCM-rate switch (**S200** or **S4**) to **64**. Continue with Step **12**.

11. Set channel PCM-rate switch (**S200** or **S4**) to **32**.

12.

**NOTE:**
**Read this Step completely before inserting LIU.** Tables D and E list alarm indicators that are present after the LIU, for your system configuration (Feature Package with or without protection), has been installed. These alarm indicators are listed on the same row as the LIU to be installed.

**NOTE:**
After installing **LIU** if the associated **DIGROUP**(s) indicator(s) on **BCU** does not go off, verify that option switch settings on **ADU** and **LIU** are correct.

Insert **LIU** into appropriate slot in facility shelf (left side for blue bank or right side for white bank) while observing indicators on **LIU** faceplate. See Table D or E for alarm indicators that change when the LIU is installed (for your Feature Package configuration).

Response: **LIU FAIL** indicator lights momentarily then goes off, and the associated **DIGROUP**(s) indicator(s) on **BCU** goes off.

Comment: If the **LIU FAIL** indicator does not go off, press and hold the **ADU LED TEST** button. If the **LIU FAIL** indicator goes off while the button is pressed, the circuit pack is not compatible with the channel bank application. Get the correct code circuit pack and verify **ADU** option switches are correct. The **AUB27 ADU CMP** indicator will light if the ADU is optioned wrong, an incompatible LIU was installed, or a wrong LIU option was set.

**Table D**
**LED Indicators for Digroups AB**

| System Configuration | | LIU (Note) | ADU | | | BCU | | | |
|---|---|---|---|---|---|---|---|---|---|
| Digroups AB (and P) to be Equipped | | | | | | | | | |
| **Protection** | **Feature Package ( )** | | **MJ** | **MN** | **NE** | **A** | **B** | | |
| With Protection | A, B Mode 1, or C | A | on | | on | off | on | | |
| | | B | off | on | on | | off | | |
| | | P | | off | off | | | | |
| | B Mode 2 or D | A | off | on | on | off | off | | |
| | | P | | off | off | | | | |
| Without Protection | A, B Mode 1, or C | A | on | | on | off | on | | |
| | | B | off | | off | | off | | |
| | B Mode 2 or D | A | off | | off | off | off | | |
| **Digroups AB and CD (and P) to be Equipped** | | | **MJ** | **MN** | **NE** | **A** | **B** | **C** | **D** |
| With or Without Protection | A, B Mode 1, or C | A | on | | on | off | on | on | on |
| | | B | on | | on | | off | on | on |
| | B Mode 2 or D | A | on | | on | off | off | on | on |

Note: LIU to be installed

**Table E**
**LED Indicators for Digroups CD**

| System Configuration | | LIU (Note) | ADU | | | BCU | |
|---|---|---|---|---|---|---|---|
| Digroups CD (and P) to be Equipped | | | | | | | |
| **Protection** | **Feature Package ( )** | | **MJ** | **MN** | **NE** | **C** | **D** |
| When Adding Protection | A, B Mode 1, or C | C | on | | on | off | on |
| | | D | off | on | on | | off |
| | | P | | off | off | | |
| | B Mode 2 or D | C | off | on | on | off | off |
| | | P | | off | off | | |
| When Not Adding Protection | A, B Mode 1, or C | C | on | | on | off | on |
| | | D | off | | off | | off |
| | B Mode 2 or D | C | off | | off | off | off |
| Note: LIU to be installed | | | | | | | |

13. Did **FAIL** indicator on **LIU** light momentarily?

    If **YES,** then proceed to Step **26.**
    If **NO,** then continue with Step **14.**

14. Replace **LIU** with correctly optioned **LIU** while observing **FAIL** indicator on **LIU** faceplate.

15. Did **FAIL** indicator on **LIU** light momentarily?

    If **YES,** then proceed to Step **26.**
    If **NO,** then continue with Step **16.**

16. Replace **TRU** associated with LIU. (TRU in AB shelf for LIUs A, B, or P. TRU in CD shelf for LIU C or D.)

17. Replace **LIU** with **LIU** removed previously while observing **FAIL** indicator on **LIU** faceplate.

18. Did **FAIL** indicator on **LIU** light momentarily?

    If **YES,** then proceed to Step **26.**
    If **NO,** then continue with Step **19.**

19. Unseat **LIU**.

20. Replace **TRU** with **TRU** removed previously.

21. **CAUTION:**
    *Incorrectly set ADU option switches may result in immediate or future loss of service or may introduce errors into the digital bitstream.*

    Replace **ADU** with a correctly optioned **ADU**.

    Reference: DLP-505, DLP-506, DLP-507

22. Reseat **LIU** while observing **FAIL** indicator on **LIU** faceplate.

23. After approximately 20 seconds, did **FAIL** indicator on **LIU** light momentarily?

    If **YES,** then proceed to Step **26.**
    If **NO,** then continue with Step **24.**

24. **CAUTION:**
    *Incorrectly set ADU option switches may result in immediate or future loss of service or may introduce errors into the digital bitstream.*

    Replace **ADU** with **ADU** removed previously.

25. Check wiring between **PCU** in AB shelf and **LIU** using SD-7C117-01 or SD-7C117-02. Repeat procedure from Step **14** after locating and correcting trouble.

26. Did **FAIL** indicator on **LIU** go off and remain off?

    If **YES,** then **STOP. YOU HAVE COMPLETED THIS PROCEDURE.**
    If **NO,** then continue with Step **27.**

27. Remove and reinsert **ADU**.

28. Did **FAIL** indicator on **LIU** go off and remain off?

    If **YES,** then **STOP. YOU HAVE COMPLETED THIS PROCEDURE.**
    If **NO,** then continue with Step **29.**

29. Replace **LIU** with correctly optioned **LIU** while observing **FAIL** indicator on **LIU** faceplate.

30. Did **FAIL** indicator on **LIU** go off and remain off?

    If **YES,** then **STOP. YOU HAVE COMPLETED THIS PROCEDURE.**
    If **NO,** then continue with Step **31.**

31. Replace **LIU** with **LIU** removed previously.

32. Check wiring using SD-7C117-01 or SD-7C117-02. Repeat procedure from Step **14** after locating and correcting trouble.

# Install PCU Unit in CD Shelf

**SUMMARY:** Install **PCU** into CD shelf and verify that **FAIL** indicator is off. Measure –42 to –56 V DC at **PCU** faceplate.

1. Get one **PCU** (**AUA11**, **AUA11B** or **AUA11C**) and inspect for possible damage.

2. Insert **PCU** into **PCU** slot in CD (upper) shelf of channel bank.

   Response: **MJ** and **NE** indicators on **ADU** and **DIGROUP C, D** indicators on **BCU** are lighted. **FAIL** indicator on **PCU** should be off.

3. Does **FAIL** indicator on **PCU** go off and remain off?

   If **YES,** then proceed to Step **8.**
   If **NO,** then continue with Step **4.**

4. Replace **PCU**.

5. Does **FAIL** indicator on **PCU** go off and remain off?

   If **YES,** then proceed to Step **8.**
   If **NO,** then continue with Step **6.**

6. Replace **PCU** with **PCU** removed previously.

7. Use SD-7C117-01 or SD-7C117-02 to check wiring. Repeat procedure from Step **2** after locating and correcting trouble.

8. Condition DMM to measure volts DC.

9. On **PCU** faceplate, connect DMM test leads to **GND** jack and –**48** jack.

10. Does DMM indicate between –42 and –56 volts?

    If **YES,** then proceed to Step **20.**
    If **NO,** then continue with Step **11.**

11. Verify that wiring from power shelf to **PCU** in facility shelf is present and connected properly.

12. Is wiring present and properly connected?

    If **YES,** then proceed to Step **14.**
    If **NO,** then continue with Step **13.**

13. Resolve problem through local procedures. Repeat procedure from Step **2** after trouble is located and corrected.

14. Replace **PCU**.

15. Does **FAIL** indicator on **PCU** go off and remain off?

    If **YES,** then continue with Step **16.**
    If **NO,** then proceed to Step **4.**

16. On **PCU** faceplate, connect DMM test leads to **GND** jack and –**48** jack.

17. Does DMM indicate between –42 and –56 volts?

    If **YES,** then proceed to Step **20.**
    If **NO,** then continue with Step **18.**

18. Replace **PCU** with **PCU** removed previously.

19. Check wiring using SD-7C117-01 or SD-7C117-02. Repeat procedure from Step **3** after locating and correcting trouble.

20. Disconnect DMM test leads.

    **STOP. YOU HAVE COMPLETED THIS PROCEDURE.**

# Install Transmit/Receive Unit (TRU) in CD Shelf

1. Get one compatible version **TRU** and inspect for possible damage.

   Reference: DLP-500

2. Insert **TRU** into **TRU** slot located in CD (upper) shelf of channel bank while observing indicators on **TRU** faceplate.

   Response: **TRU FAIL** indicator lights momentarily; **MJ** and **NE** indicators on **ADU** and **DIGROUP C, D** indicators on **BCU** are lighted.

3. Does **FAIL** indicator on **TRU** go off and remain off?

   If **YES,** then proceed to Step **17.**
   If **NO,** then continue with Step **4.**

4. Remove and then reinsert channel bank **ADU** circuit pack.

5. After approximately 15 seconds, does **FAIL** indicator on **TRU** go off and remain off?

   If **YES,** then proceed to Step **17.**
   If **NO,** then continue with Step **6.**

6. Replace **TRU** in CD shelf while observing indicators on **TRU** faceplate.

7. Does **FAIL** indicator on **TRU** go off and remain off?

   If **YES,** then proceed to Step **17.**
   If **NO,** then continue with Step **8.**

8. Remove **ADU** and verify that option switches are set correctly.

   Reference: DLP-505, DLP-506, DLP-507

9. Are option switches on **ADU** set correctly?

   If **YES,** then proceed to Step **12.**
   If **NO,** then continue with Step **10.**

10. Change option switches on **ADU** to correct settings.

11. Wait 20 seconds and then replace **TRU** with **TRU** removed previously and repeat from Step **3.**

12. ⚠ **CAUTION:**
    *Incorrectly set ADU option switches may result in immediate or future loss of service or may introduce errors into the digital bitstream.*

    Replace **ADU** with correctly optioned **ADU**.

13. Replace **TRU** with **TRU** removed previously while observing indicators on **TRU** faceplate.

14. Does **FAIL** indicator on **TRU** go off and remain off?

    If **YES,** then proceed to Step **17.**
    If **NO,** then continue with Step **15.**

15. ⚠ **CAUTION:**
    *Incorrectly set ADU option switches may result in immediate or future loss of service or may introduce errors into the digital bitstream.*

    Replace **ADU** with **ADU** removed previously.

16. Check wiring using SD-7C117-01 or SD-7C117-02. Repeat procedure from Step **3** after locating and correcting trouble.

17. Did **FAIL** indicator on **TRU** light momentarily?

    If **YES,** then **STOP. YOU HAVE COMPLETED THIS PROCEDURE.**
    If **NO,** then continue with Step **18.**

18. Replace **TRU** in CD shelf while observing indicators on **TRU** faceplate.

19. Did **FAIL** indicator on **TRU** light momentarily?

    If **YES,** then **STOP. YOU HAVE COMPLETED THIS PROCEDURE.**
    If **NO,** then continue with Step **20.**

20. Replace **TRU** with **TRU** removed previously.

21. Check wiring between **PCU** and **TRU** on CD shelf using SD-7C117-01 or SD-7C117-02. Repeat procedure from Step **3** after locating and correcting trouble.

# Install Line Switch Unit (LSU) in Facility Shelf

1.

**NOTE:**
An **AUA13 LSU** cannot be used in an RT channel bank assembly equipped for FPD operation.

Get one **LSU** (Line Switch Unit) (**AUA13** or **AUA73**) and inspect for possible damage.

2. Is the **LSU** an **AUA13**?

   If **YES,** then proceed to Step **6.**
   If **NO,** then continue with Step **3.**

3. Is **LSU** being installed in RT channel bank assembly equipped for FPD capability?

   If **YES,** then continue with Step **4.**
   If **NO,** then proceed to Step **5.**

4. Set switch **S2** located on the side of the **LSU** circuit pack (Figure 1) to position **32** and proceed to Step **6.**

5. Set switch **S2** located on the side of the **LSU** circuit pack (Figure 1) to position **64**.

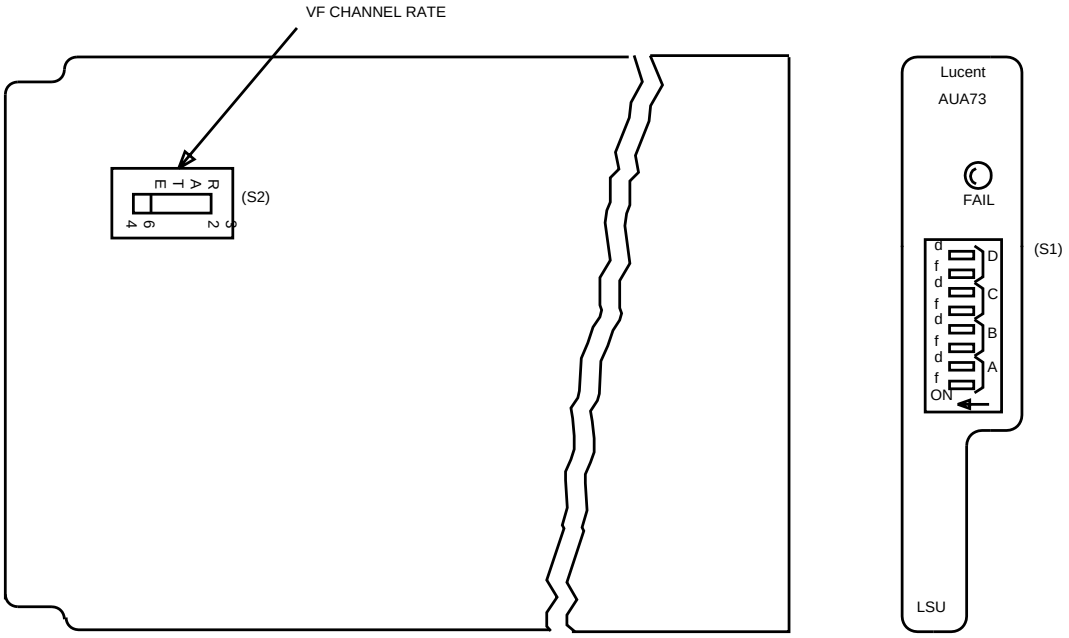


**Figure 1 – AUA73 LSU Option and Faceplate Switches**

6. Set all eight force (**f**)/deny (**d**) switches on **LSU** faceplate to off (right-hand side) position (Figure 2).

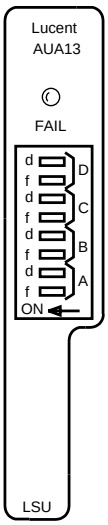


**Figure 2 – AUA13 Line Switch Unit Faceplate**

7.

**CAUTION:**
*Incorrectly set LSU option switches may result in immediate or future loss of service or may introduce errors into the digital bitstream.*

While observing **FAIL** indicator on **LSU** faceplate, insert **LSU** into **LSU** slot in middle (for the blue bank) or right side (for white bank) of facility shelf.

Response: **LSU FAIL** indicator lights momentarily. **MN** and **NE** indicators on **ADU** are lighted.

8. Does **LSU FAIL** indicator go off and remain off?

If **YES,** then proceed to Step **15.**
If **NO,** then continue with Step **9.**

9. Remove **LSU**.

10. Get a replacement **LSU** and set option switches according to Steps **2** through **6**.

11.

**CAUTION:**
*Incorrectly set LSU option switches may result in immediate or future loss of service or may introduce errors into the digital bitstream.*

While observing **FAIL** indicator on **LSU** faceplate, insert **LSU** into **LSU** slot in facility shelf.

Response: **LSU FAIL** indicator lights momentarily and **MN** and **NE** indicators on **ADU** are lighted.

12. Does **LSU FAIL** indicator go off and remain off?

If **YES,** then proceed to Step **15.**
If **NO,** then continue with Step **13.**

13.

**CAUTION:**
*Incorrectly set LSU option switches may result in immediate or future loss of service or may introduce errors into the digital bitstream.*

Replace **LSU** with **LSU** removed previously while observing **FAIL** indicator on **LSU** faceplate.

14. Check wiring using SD-7C117-01 or SD-7C117-02. Repeat procedure from Step **7** after locating and correcting trouble.

15. Did **FAIL** indicator on **LSU** light momentarily?

    If **YES,** then **STOP. YOU HAVE COMPLETED THIS PROCEDURE.**
    If **NO,** then continue with Step **16.**

16. Remove **LSU**.

17. Get a replacement **LSU** and set option switches according to Steps **2** through **6**.

18. **CAUTION:**
    *Incorrectly set LSU option switches may result in immediate or future loss of service or may introduce errors into the digital bitstream.*

    While observing **FAIL** indicator on **LSU** faceplate, insert **LSU** into **LSU** slot in facility shelf.

    Response: **LSU FAIL** indicator lights momentarily and **MN** and **NE** indicators on **ADU** are lighted.

19. Did **FAIL** indicator on **LSU** light momentarily?

    If **YES,** then **STOP. YOU HAVE COMPLETED THIS PROCEDURE.**
    If **NO,** then continue with Step **20.**

20. Remove **ADU** and check for proper option settings.

    Reference: DLP-505, DLP-506, DLP-507

21. Are option switches on **ADU** set correctly?

    If **YES,** then proceed to Step **24.**
    If **NO,** then continue with Step **22.**

22. Set option switches on **ADU** to correct positions and reinsert **ADU** into **ADU** slot.

23.

**CAUTION:**
*Incorrectly set LSU option switches may result in immediate or future loss of service or may introduce errors into the digital bitstream.*

Wait 20 seconds and then replace **LSU** with **LSU** removed previously and repeat from Step **7.**

24.

**CAUTION:**
*Incorrectly set ADU option switches may result in immediate or future loss of service or may introduce errors into the digital bitstream.*

Replace **ADU** with another correctly optioned **ADU**.

Reference: DLP-505, DLP-506, DLP-507

25.

**CAUTION:**
*Incorrectly set LSU option switches may result in immediate or future loss of service or may introduce errors into the digital bitstream.*

Wait 20 seconds and then replace **LSU** with the **LSU** removed previously while observing **FAIL** indicator on **LSU** faceplate.

26. Did **FAIL** indicator on **LSU** light momentarily?

If **YES,** then **STOP. YOU HAVE COMPLETED THIS PROCEDURE.**
If **NO,** then continue with Step **27.**

27.

**CAUTION:**
*Incorrectly set ADU option switches may result in immediate or future loss of service or may introduce errors into the digital bitstream.*

Replace **ADU** with **ADU** removed previously.

28. Check wiring between facility shelf **PCU** and **LSU** using SD-7C117-01 or SD-7C117-02. Repeat procedure from Step **7** after locating and correcting trouble.

# Install Channel Test Unit (CTU)

1. Get one **AUB22** (PGTC) or **AUB25** (PGTC with compatible version BCU or XTC) **CTU** and inspect for possible damage.

   Reference: DLP-500

2. Insert **CTU** into **CTU** slot in blue (lower) channel bank while observing indicators on **CTU** faceplate.

   Response: **CTU FAIL** indicator is lighted and **BUSY** indicator flashes.

3. Does **FAIL** indicator on **CTU** go off and remain off?

   If **YES,** then proceed to Step **9.**
   If **NO,** then continue with Step **4.**

4. Replace **CTU**.

5. While observing **FAIL** indicator on **CTU** faceplate, insert **CTU** into **CTU** slot in blue (lower) channel bank shelf.

   Response: **CTU FAIL** indicator lights momentarily.

6. Does **FAIL** indicator on **CTU** go off and remain off?

   If **YES,** then proceed to Step **9.**
   If **NO,** then continue with Step **7.**

7. Replace **CTU** with **CTU** removed previously while observing **FAIL** indicator on **CTU** faceplate.

8. Check wiring using SD-7C117-01 or SD-7C117-02. Repeat procedure from Step **3** after locating and correcting trouble.

9. Did **FAIL** indicator on **CTU** light momentarily?

   If **YES,** then **STOP. YOU HAVE COMPLETED THIS PROCEDURE.**
   If **NO,** then continue with Step **10.**

10. Replace **CTU** while observing **FAIL** indicator on **CTU** faceplate.

11. Did **FAIL** indicator on **CTU** light momentarily?

    If **YES,** then **STOP. YOU HAVE COMPLETED THIS PROCEDURE.**
    If **NO,** then continue with Step **12.**

12. ⚠ **CAUTION:**
    *Incorrectly set ADU option switches may result in immediate or future loss of service or may introduce errors into the digital bitstream.*

    Replace **ADU** with another correctly optioned **ADU**.

13. Wait 20 seconds and then replace **CTU** with **CTU** removed previously while observing **FAIL** indicator on **CTU** faceplate.

14. Did **FAIL** indicator on **CTU** light momentarily?

    If **YES,** then **STOP. YOU HAVE COMPLETED THIS PROCEDURE.**
    If **NO,** then continue with Step **15.**

15. ⚠ **CAUTION:**
    *Incorrectly set ADU option switches may result in immediate or future loss of service or may introduce errors into the digital bitstream.*

    Replace **ADU** with **ADU** removed previously.

16. Are any fuses on **CFU** in blue (lower) bank blown?

    If **YES,** then continue with Step **17.**
    If **NO,** then proceed to Step **20.**

17. Replace blown fuse(s) on **CFU**.

18. Unseat, then reseat **CTU** while observing **FAIL** indicator on **CTU** faceplate.

19. Does **FAIL** indicator on **CTU** light momentarily?

    If **YES,** then **STOP. YOU HAVE COMPLETED THIS PROCEDURE.**
    If **NO,** then continue with Step **20.**

20. Replace **CFU** in blue bank.

21. Unseat, then reseat **CTU** while observing **FAIL** indicator on **CTU** faceplate.

22. Does **FAIL** indicator on **CTU** light momentarily?

    If **YES,** then **STOP. YOU HAVE COMPLETED THIS PROCEDURE.**
    If **NO,** then continue with Step **23.**

23. Check wiring between **PCU** in facility shelf and **CFU** in blue bank and between **CFU** and **CTU** using SD-7C117-01 or SD-7C117-02. Repeat procedure from Step **11** after locating and correcting trouble.

# Install Digital Test Unit (DTU)

1.

**NOTE:**
The DTU consists of two units designated **DTU-L** (DTU-left) and **DTU-R** (DTU-right).

Get one **DTU-L** (**AUA18**) and one **DTU-R** (**AUA19**) and inspect for possible physical damage.

2. Insert **DTU-L** into left-hand side of **DTU** slot in facility shelf.

   Response: All bank indicators are off and no office alarms are active.

3. While observing **FAIL** indicator on **DTU-R** faceplate, insert **DTU-R** into right-hand side of **DTU** slot in facility shelf.

   Response: **DTU-R FAIL** indicator lights momentarily. All bank indicators are off and no office alarms are active.

4. Does **FAIL** indicator on **DTU-R** go off and remain off?

   If **YES,** then proceed to Step **9.**
   If **NO,** then continue with Step **5.**

5. Replace both **DTU-L** and **DTU-R** while observing **FAIL** indicator on **DTU-R** faceplate.

   Response: **DTU-R FAIL** indicator lights momentarily.

6. Does **FAIL** indicator on **DTU-R** go off and remain off?

   If **YES,** then proceed to Step **9.**
   If **NO,** then continue with Step **7.**

7. Replace **DTU-L** and **DTU-R** with units removed previously.

8. Check wiring using SD-7C117-01 or SD-7C117-02. Repeat procedure from Step **4** after locating and correcting trouble.

9. Did **DTU-R FAIL** indicator light momentarily?

   If **YES,** then proceed to Step **24.**
   If **NO,** then continue with Step **10.**

10. Replace both **DTU-L** and **DTU-R** while observing **FAIL** indicator on **DTU-R** faceplate.

    Response: **DTU-R FAIL** indicator lights momentarily.

11. Did **DTU-R FAIL** indicator light momentarily?

    If **YES,** then proceed to Step **24.**
    If **NO,** then continue with Step **12.**

12. **CAUTION:**
    *Incorrectly set ADU option switches may result in immediate or future loss of service or may introduce errors into the digital bitstream.*

    Replace **ADU** with another correctly optioned **ADU**.

13. Wait 20 seconds then replace **DTU-L** and **DTU-R** with units removed previously while observing **FAIL** indicator on **DTU-R** faceplate.

14. Did **FAIL** indicator on **DTU-R** light momentarily?

    If **YES,** then proceed to Step **24.**
    If **NO,** then continue with Step **15.**

15. **CAUTION:**
    *Incorrectly set ADU option switches may result in immediate or future loss of service or may introduce errors into the digital bitstream.*

    Replace **ADU** with **ADU** removed previously.

16. Are any fuses on **CFU** in blue (lower) bank blown?

    If **YES,** then continue with Step **17.**
    If **NO,** then proceed to Step **20.**

17. Replace blown fuse(s) on **CFU**.

18. While observing **FAIL** indicator on **DTU-R** faceplate, unseat then reseat **DTU-R**.

19. Does **FAIL** indicator on **DTU-R** light momentarily?

    If **YES,** then proceed to Step **24.**
    If **NO,** then continue with Step **20.**

20. Replace **CFU** in blue bank.

21. While observing **FAIL** indicator on **DTU-R** faceplate, unseat then reseat **DTU-R**.

22. Does **FAIL** indicator on **DTU-R** light momentarily?

    If **YES,** then proceed to Step **24.**
    If **NO,** then continue with Step **23.**

23. Check wiring between **PCU** in facility shelf and **CFU** in blue bank and between **CFU** and **DTU-R/DTU-L** using SD-7C117-01 or SD-7C117-02. Repeat procedure from Step **9** after locating and correcting trouble.

24. Is **BUSY** indicator on **DTU-R** lighted?

    If **YES,** then continue with Step **25.**
    If **NO,** then **STOP. YOU HAVE COMPLETED THIS PROCEDURE.**

25. Replace both **DTU-L** and **DTU-R**.

26. Is **BUSY** indicator on **DTU-R** lighted?

    If **YES,** then continue with Step **27.**
    If **NO,** then **STOP. YOU HAVE COMPLETED THIS PROCEDURE.**

27. **CAUTION:**
    *Incorrectly set ADU option switches may result in immediate or future loss of service or may introduce errors into the digital bitstream.*

    Replace **ADU** with another correctly optioned **ADU**.

28. Wait 20 seconds then replace **DTU-L** and **DTU-R** with units removed previously.

29. Is **BUSY** indicator on **DTU-R** lighted?

    If **YES,** then continue with Step **30.**
    If **NO,** then **STOP. YOU HAVE COMPLETED THIS PROCEDURE.**

30.

**CAUTION:**
*Incorrectly set ADU option switches may result in immediate or future loss of service or may introduce errors into the digital bitstream.*

Replace **ADU** with **ADU** removed previously.

31. Check wiring using SD-7C117-01 or SD-7C117-02. Repeat procedure from Step **4** after locating and correcting trouble.

# Perform RT Indicator Test

1. Press and hold **LED TEST** pushbutton on **ADU**.

   Comment: If the **MC97771A1 BCU** is installed, the **FAIL** indicator will light if the circuit pack is not compatible with the RT application. Press and hold the **ADU LED TEST** button. If the **FAIL** indicator goes off while the button is pressed, the circuit pack is not compatible with the RT application. Get the correct code circuit pack and verify **ADU** option switches are correct.

2. Are all indicators listed in Table A lighted during LED test?

   If **YES,** then **STOP. YOU HAVE COMPLETED THIS PROCEDURE.**
   If **NO,** then continue with Step **3.**

| **Table A<br>Series 5 RT Led Test** | |
|---|---|
| **Unit** | **Indicator Lit** |
| LIU | All Indicators |
| TRU | All Indicators |
| BCU | All Indicators |
| ADU | All Indicators * |
| CTU | FAIL |
| LSU | FAIL |
| TCU | FAIL |
| *** AUB27 Only** | |
| CMP | Blinks When C-AutoCut Option "CUT" is Used |
| PRV | Blinks When *SLC*® 96 Mode Option "FS" is Used |

3. Are any of the indicators lighted during LED test?

   If **YES,** then continue with Step **4.**
   If **NO,** then proceed to Step **5.**

4. **CAUTION:**
   *Any time a circuit pack containing option switches is replaced in an RT assembly, ensure that any option switches are set per the work order or engineering records. Incorrectly set LIU, LSU, or ADU option switches may result in immediate or future loss of service or may introduce errors into the digital bitstream.*

   Replace unit(s) that contain indicators that do not light and repeat from Step **1.**

5. Replace **BCU**.

6. Press and hold **LED TEST** pushbutton on **ADU**.

7. Are all indicators listed in Table A lighted during LED test?

   If **YES,** then **STOP. YOU HAVE COMPLETED THIS PROCEDURE.**
   If **NO,** then continue with Step **8.**

8. Are any of the indicators lighted during LED test?

   If **YES,** then proceed to Step **4.**
   If **NO,** then continue with Step **9.**

9. Replace **BCU** with **BCU** removed previously.

10. **CAUTION:**
    *Incorrectly set ADU option switches may result in immediate or future loss of service or may introduce errors into the digital bitstream.*

    Replace **ADU**. Verify that option switch settings on replacement **ADU** agree with option switch settings on **ADU** being replaced.

11. Press and hold **LED TEST** pushbutton on **ADU**.

12. Are all indicators listed in Table A lighted during LED test?

    If **YES,** then **STOP. YOU HAVE COMPLETED THIS PROCEDURE.**
    If **NO,** then continue with Step **13.**

13. Are any of the indicators lighted during LED test?

    If **YES,** then proceed to Step **4.**
    If **NO,** then continue with Step **14.**

14. ⚠ **CAUTION:**
    *Incorrectly set ADU option switches may result in immediate or future loss of service or may introduce errors into the digital bitstream.*

    Replace **ADU** with **ADU** removed previously.

15. Refer to SD-7C117-01 or SD-7C117-02. Repeat procedure from Step **1** after locating and correcting trouble.

# Perform Check of RT Remote Alarms

1. Is system being equipped located in a frame-type RT with bulk powering (J1C182BB bulk power shelf or J1C182PB optics power shelf)?

   If **YES,** then proceed to Step **8.**
   If **NO,** then continue with Step **2.**

2. 

   **NOTE:**
   This procedure should only be performed if system is equipped with working batteries and battery charger(s).

   Turn off circuit breaker (or unplug power cord) for power shelf.

3. Are **PMN** or **P/M** indicators on **BCU**s and **NE** indicators on **ADU**s lighted after approximately 4 minutes?

   If **YES,** then proceed to Step **5.**
   If **NO,** then continue with Step **4.**

4. Check wiring using SD-7C118-01. Repeat procedure from Step **3** after locating and correcting trouble.

5. Restore AC power to power shelf.

6. Do **PMN** or **P/M** indicators on **BCU**s and **NE** indicators on **ADU**s go off after approximately 4 minutes?

   If **YES,** then proceed to Step **8.**
   If **NO,** then continue with Step **7.**

7. Check wiring using SD-7C118-01. Repeat procedure from Step **3** after locating and correcting trouble.

8.

**NOTE:**
The remainder of this check is valid only for banks equipped with **MC97723A1**, **MC97756A1**, **MC97771A1** , **MC97776A1** (Feature Package C-AutoCut and Feature Package B Mode 2 only), or **MC97779A1** (Feature Package F AutoCut and Mode 2 only) coded **BCU**s.

If RT is equipped with the **MC97724A1 BCU**, proceed to Step **17**. Otherwise continue with this Step. Locate, using CO or engineering records, points where MISC1 and MISC2 remote alarms are activated.

9. Activate MISC1 remote alarm.

10. Is **MISC1** indicator on **BCU** lighted?

    If **YES,** then proceed to Step **12.**
    If **NO,** then continue with Step **11.**

11. Check wiring using SD-7C118-01 or SD-7C118-02. Repeat procedure from Step **9** after locating and correcting trouble.

12. Deactivate MISC1 remote alarm and activate MISC2 remote alarm.

13. Is **MISC1** indicator on **BCU** off and **MISC2** indicator on **BCU** lighted?

    If **YES,** then proceed to Step **15.**
    If **NO,** then continue with Step **14.**

14. Check wiring using SD-7C118-01 or SD-7C118-02. Repeat procedure from Step **9** after locating and correcting trouble.

15. Deactivate MISC2 remote alarm.

16. Verify that **MISC2** indicator on **BCU** goes off.

17. Is system equipped with the Fiber-To-The-Home feature?

    If **YES,** then continue with Step **18.**
    If **NO,** then proceed to Step **321.**

18. At optics power shelf assembly, replace fuse in **CMN** fuse holder with blown fuse in **BFU3** (if equipping the lower dual bank assembly) or **BFU4** (if equipping the upper dual bank assembly).

19. Do **MN** and **NE** indicators on both white and blue system **ADU**s and **A/FCU MN** indicator light?

    If **YES,** then proceed to Step **21.**
    If **NO,** then continue with Step **20.**

20. Check wiring using SD-7C118-02. Repeat procedure from Step **19** after locating and correcting trouble.

21. Replace **CMN** blown fuse in **BFU** with good fuse and verify that **ADU MN** and **NE** and **A/FCU MN** indicators go off.

22. At optics power shelf assembly, replace fuse in **BLUE** or **WHITE** fuse holder with blown fuse in **BFU1** (if equipping the lower dual bank assembly) or **BFU2** (if equipping the upper dual bank assembly).

23. Do **MJ** and **NE** indicators on both white and blue system **ADU**s and **A/FCU MJ** indicator light?

    If **YES,** then proceed to Step **25.**
    If **NO,** then continue with Step **24.**

24. Check wiring using SD-7C118-02. Repeat procedure from Step **23** after locating and correcting trouble.

25. Replace blown **BLUE** or **WHITE** fuse in **BFU** with good fuse and verify that **ADU MJ** and **NE** and **A/FCU MJ** indicators go off.

26. At optics power shelf assembly, remove either **PCU1** (if equipping the lower dual bank assembly) or **PCU5** (if equipping the upper dual bank assembly).

27. Do **MJ** and **NE** indicators on both white and blue system **ADU**s and **A/FCU MJ** indicator light?

    If **YES,** then proceed to Step **29.**
    If **NO,** then continue with Step **28.**

28. Check wiring using SD-7C118-02. Repeat procedure from Step **27** after locating and correcting trouble.

29. Replace **PCU** and verify that **ADU MJ** and **NE** and **A/FCU MJ** indicators go off.

30. Have all **PCU**s in slots **PCU1** - **PCU4** or **PCU5** - **PCU8** been tested?

    If **YES,** then **STOP. YOU HAVE COMPLETED THIS PROCEDURE**.
    If **NO,** then continue with Step **31.**

31. Remove the **PCU** from next higher numbered **PCU** slot and repeat the procedure from Step **27**.

32. Is the system equipped for FPB Mode 2?

    If **YES,** then continue with Step **33.**
    If **NO,** then **STOP. YOU HAVE COMPLETED THIS PROCEDURE**.

33.

    **CAUTION:**
    *Installing any channel unit other than AUA403, AUA400, AUA401, AUA404, AUA405, AUA406, or AUA408 may result in permanent damage to the optical shelf AYB1B optical unit in a Mode 2 Fiber-To-The-Home or SLC-2000 Multi-Services Distant Terminal configuration.*

    **NOTE:**
    The remainder of this check is valid only for banks equipped for Feature Package B Mode 2 applications. This test must not be performed on a FTTH or MSDT Mode 2 system.

    Obtain one special service channel unit **AUA41, AUA42, AUA43, AUA44, AUA54,** or **AUA52** and install in any channel unit slot except the last four slots for new digroup.

    Response: The **SPL** indicator on the **AUA105 TRU** lights.

34. Did **SPL** indicator light on the **AUA105 TRU**?

    If **YES**, continue with Step **35**.
    If **NO**, proceed to Step **36**.

35. Remove channel unit and repeat Step **32** for each new digroup.

    **STOP. YOU HAVE COMPLETED THIS PROCEDURE.**

36. Replace, one at a time, the **AUA105 TRU, AUB27 ADU, MC97771A1,** or **MC97776A1 BCU** with correct option setting and repeat **SPL** indicator test after each replacement. If the **SPL** indicator does not light after these units have been replaced, correct wiring trouble using SD-7C118-01.

# Test Battery String (OPEN BAT TEST)

**SUMMARY:** This test verifies that no battery string has an open circuit. Verify that plant has sufficient load. Requirement: plant current measures 3A (3 mV DC). Depress and hold OPEN BAT TEST pushbutton; measure each battery string current. Requirement: DMM indicates greater than 0 mV DC for each battery string.

1. On the control & distribution panel, verify that some or all of the load circuit breakers **CB1**, **CB2**, **CB3**, **CB4**, **CB5**, and **CB6** are turned on (closed).

2. Condition DMM to measure DC volts. Measure bulk power plant load at **PC** and **PCR** test points.

3. Does DMM indicate 3 mV (equivalent to 3A) or higher bulk power plant current?

   If **YES,** then continue with Step **4.**
   If **NO,** then bulk power plant does not have enough load for test.

4. Connect DMM to **BATC** test point and **BAT( )** (BAT1, BAT2, BAT3, BAT4) test point to measure battery string current for battery string being tested.

5. 

   **NOTE:**
   Depressing the **OPEN BAT TEST** pushbutton turns off the power units (rectifiers) as long as the pushbutton is depressed and will suppress alarms for 2.5 minutes. The pushbutton may be depressed by inserting an orange stick through the hole.

   Depress and hold **OPEN BAT TEST** pushbutton.

6. Note DMM indication. Measure battery string current at test points for remaining battery strings to be tested.

7. Release **OPEN BAT TEST** pushbutton.

8. Did DMM indicate 0 mV for any battery string?

   If **YES,** then continue with Step **9.**
   If **NO,** then **STOP. YOU HAVE COMPLETED THIS PROCEDURE**

9. Check battery string connections (refer to SD-7C158-01). Check battery compartment to verify that battery string is connected to cables from control & distribution panel. Check the fuse in each battery cable from the control & distribution panel and make sure it is not blown. (Be sure to check the positive and negative battery cable for each battery string.) Fix connection problem and repeat from Step **4.**

# Verify Correct Complement of Circuit Packs for FP303

1. Refer to Table A to determine the required number and complement of circuit packs for feature package 303 (FP303).

2. Are all required packs available?

   If **YES**, then **STOP. YOU HAVE COMPLETED THIS PROCEDURE.**
   If **NO**, then obtain missing packs.

**TABLE A**
**FP303 COMMON UNIT COMPATIBILITY**

| Unit Code | Function Code | Requirements |
|---|---|---|
| BCU | MC97796A1 | One BCU for each system (blue and white). |
| ADU | AUB27B | One ADU for each system (blue and white). |
| TRU | AUA112B | One TRU for each dual digroup shelf (two for each system); one 993A TRU cable to connect TRUs. |
| LIU | AUA61C, D, E or F<br>AUA62C, D, E or F<br>AUA64C, D, E or F | One LIU for each equipped DS1; choose among unit codes. |
| LSU | AUA74 | One LSU for each system with DS1 protection switching. |
| CTU | AUB22<br>AUB25 | One CTU for each dual channel bank; choose between unit codes. |
| PCU | AUA11( ) | One PCU for each shelf of the dual channel bank. |
| CFU | AUA114<br>39E | One CFU for each system; choose between unit codes. |
| LFU | AUA115<br>39F | One LFU for each dual channel bank if equipped with AUA62C or D LIUs; choose between unit codes. |
| FCU | AUA24 | One FCU is required for each system if a 2( ) fan unit is installed. |

**NOTE:**
CMIP-91 BCUs and TRUs are backward-compatible in the 5ESS switch, i.e., any one of these cards can work with CMIP-89 cards.

# Install FP303 Bank Control Unit

1. Get one **MC97777A1** bank control unit (**BCU**) and inspect for possible damage.

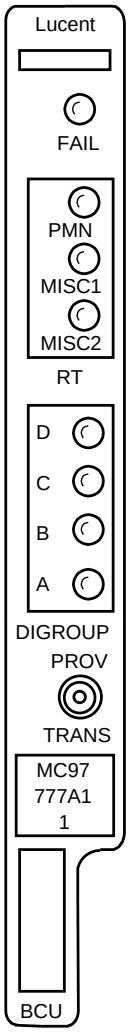


tpa 813536/01

**Figure 1 – MC97777A1 BCU Faceplate**

2. Insert the **BCU** into lower **BCU** slot if equipping blue bank or upper **BCU** slot is equipping the white bank. Within 75 seconds, all other indicators go off and the **PRV** LED on the **ADU** lights. Wait for the **PRV** indicator to go off before removing the **ADU** or **BCU**. It can take up to 10 minutes for **PRV** LED to go off.

3. Did all alarm indicators go off?

   If **YES**, then **STOP. YOU HAVE COMPLETED THIS PROCEDURE.**
   If **NO**, then continue with Step **4.**

4. Replace **BCU**.

5. Did all alarm indicators go off?

   If **YES**, then **STOP. YOU HAVE COMPLETED THIS PROCEDURE.**
   If **NO**, then continue with Step **6.**

6. Replace the **BCU** with the one removed previously.

7. **CAUTION:**
   *Incorrectly set ADU option switches can result in immediate or future loss of service or can introduce errors into the digital bitstream.*

   Replace **ADU**.

   Reference: DLP-523

8. Did all alarm indicators go off?

   If **YES**, then **STOP. YOU HAVE COMPLETED THIS PROCEDURE.**
   If **NO**, then continue with Step **9.**

9. Replace the **ADU** with the one removed previously.

10. Check wiring using SD-7C117-01 or SD-7C117-02. Repeat procedure from Step **2** after locating and correcting the trouble.

# Install Alarm Display Unit in FP303 Optioned for Preservice and Unequipped

1. Get one alarm display unit (**ADU**), as required, and inspect for possible damage.

2. On **AUB27( )** option switch **S1** (Table A and Figure 1), use an orange stick (KS-6320, L1) or equivalent and set switch positions as follows:

   - **1** - Toward **PL** if equipping system with protection switching. Otherwise, toward **NPL**. (See work order.)
   - **2** - Toward **4**.
   - **3** - Toward **ABP**.
   - **4** - Toward **CDP**.
   - **5** - Toward **ABU**.
   - **6** - Toward **CDU**.
   - **7** - Toward **1MJ** if **MISC1** is to report a major alarm or toward **1MN** if **MISC1** is to report a minor alarm. (See work order.)
   - **8** - Toward **2MJ** if **MISC2** is to report a major alarm or toward **2MN** if **MISC2** is to report a minor alarm. (See work order.)

| **Table A<br>AUB27( ) Switch Setting** | | |
|---|---|---|
| **S1 Switch** | | |
| No Protection Line (***NPL***) | 1 | Protection Line (***PL***) |
| ***2*** | 2 | Use ***4*** |
| AB In-Service (***ABI***) | 3 | AB Preservice (***ABP***) |
| CD In-Service (***CDI***) | 4 | CD Preservice (***CDP***) |
| AB Equipped (***ABE***) | 5 | AB Unequipped (***ABU***) |
| CD Equipped (***CDE***) | 6 | CD Unequipped (***CDU***) |
| Major Alarm for MISC1 (***1MJ***) | 7 | Minor Alarm for MISC1 (***1MN***) |
| Major Alarm for MISC2 (***2MJ***) | 8 | Minor Alarm for MISC2 (***2MN***) |
| **S2 Switch** | | |
| Use ***16*** | 1 | ***13*** |
| ***FS*** | 2 | Use ***FE*** |
| Use ***NC*** | 3 | ***CUT*** |
| Use ***SGL*** | 4 | ***DBL*** |
| ***PA*** | 5 | Use ***NPA*** |
| ***MJP*** | 6 | Use ***MNP*** |
| LIU B DS1 Equipped | 7 | LIU B DS1 Unequipped |
| LIU D DS1 Equipped | 8 | LIU D DS1 Unequipped |
| **S3 Switch** | | |
| Use ***DL*** | | ***NDL*** |
| **CLEAR/NORM Plug** | | |
| Clear Provisioning<br>(Use ***CLEAR*** When ADU is first installed in a new system) | | Do Not Clear Provisioning<br>(Use ***NORM*** for In-Service System) |
| **S4, S5, S6, and S7 Rotary Switches** | | |
| System ID Number | | |
| **S8, S9, S10, and S11 Rotary Switches** | | |
| Unused (Set to 0) | | |

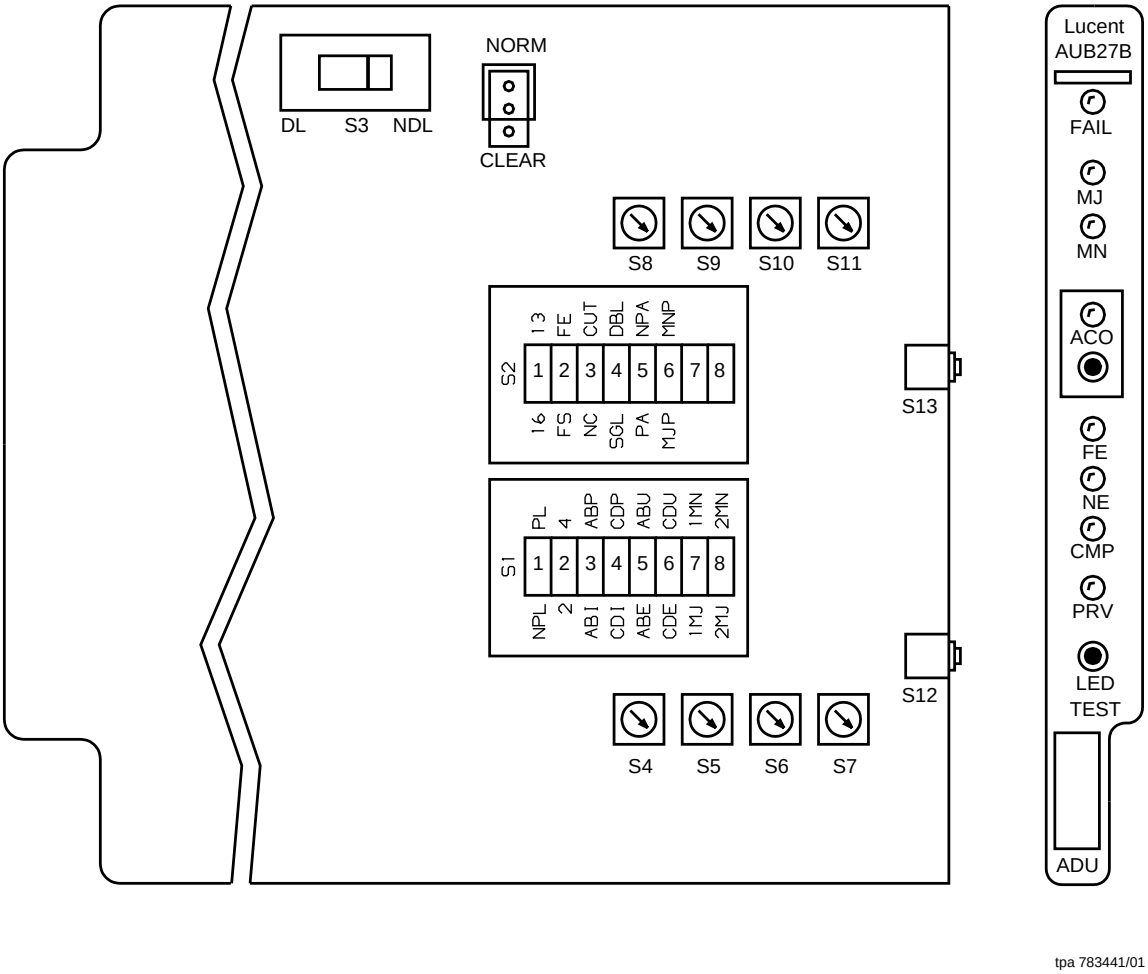


**Figure 1 – AUB27( ) RT ADU Option Switch Settings**

3. On **AUB27( ) ADU** option switch **S2** (Table A and Figure 1), use an orange stick (KS-6320) or equivalent and set switches as follows:
   - **1** - Toward **16**.
   - **2** - Toward **FE**.
   - **3** - Toward **NC**.
   - **4** - Toward **SGL**.
   - **5** - Toward **NPA**.

- **6** - Toward **MNP**.
- **7** - Toward right (**MNP** side of switch).
- **8** - Toward right (**MNP** side of switch).

4. Set switch **S3** toward **DL**.

5. Set system identification rotary switches **S4** (most significant digit) through **S7** (least significant digit) to bank ID number. (See work order.)

6. Rotary switches **S8** through **S11** are unused (set to 0).

7. 

**NOTE:**
The **NORM/CLEAR** switch option is used to automatically clear random channel provisioning data stored in the **ADU** and **BCU**.

Set **NORM/CLEAR** option plug for **CLEAR** option [AUB27( ) center and bottom pins].

8. 

**CAUTION:**
*Incorrectly set **ADU** option switches may result in immediate or future loss of service or may introduce errors into the digital bitstream.*

Insert **ADU** into lower **ADU** slot if equipping blue bank or upper **ADU** slot if equipping white bank. Disregard all alarms.

**STOP. YOU HAVE COMPLETED THIS PROCEDURE.**

# Set the Option Switches on a C- or D-type LIU

1.

**CAUTION:**
*Do not use a line powering **LIU** (**AUA62C** or **D**) in applications with a lightwave multiplexer. The powering **LIU**s may damage the multiplexer low speed interface pack.*

**CAUTION:**
*Incorrectly set **LIU** option switches may result in immediate or future loss of service or may introduce errors into the digital bitstream. All **LIU**s in the same bank should have identical option switch settings.*

Get one C- or D-type line interface unit (**LIU**) (Figure 1) and inspect for possible damage.

2. Is the **LIU** an **AUA61C or D**?

   If **YES**, then continue with Step **3**.
   If **NO**, then go to Step **5**.

3. Using an orange stick (KS-6320, L1) or equivalent, set the equalizer switches (**S2**) per work order (Table A).

4. Set the loopback enable/disable switch (**S3**) to **DIS**. Go to Step **6**.

5. Set the transmit and receive pad switches per work order (Table B).

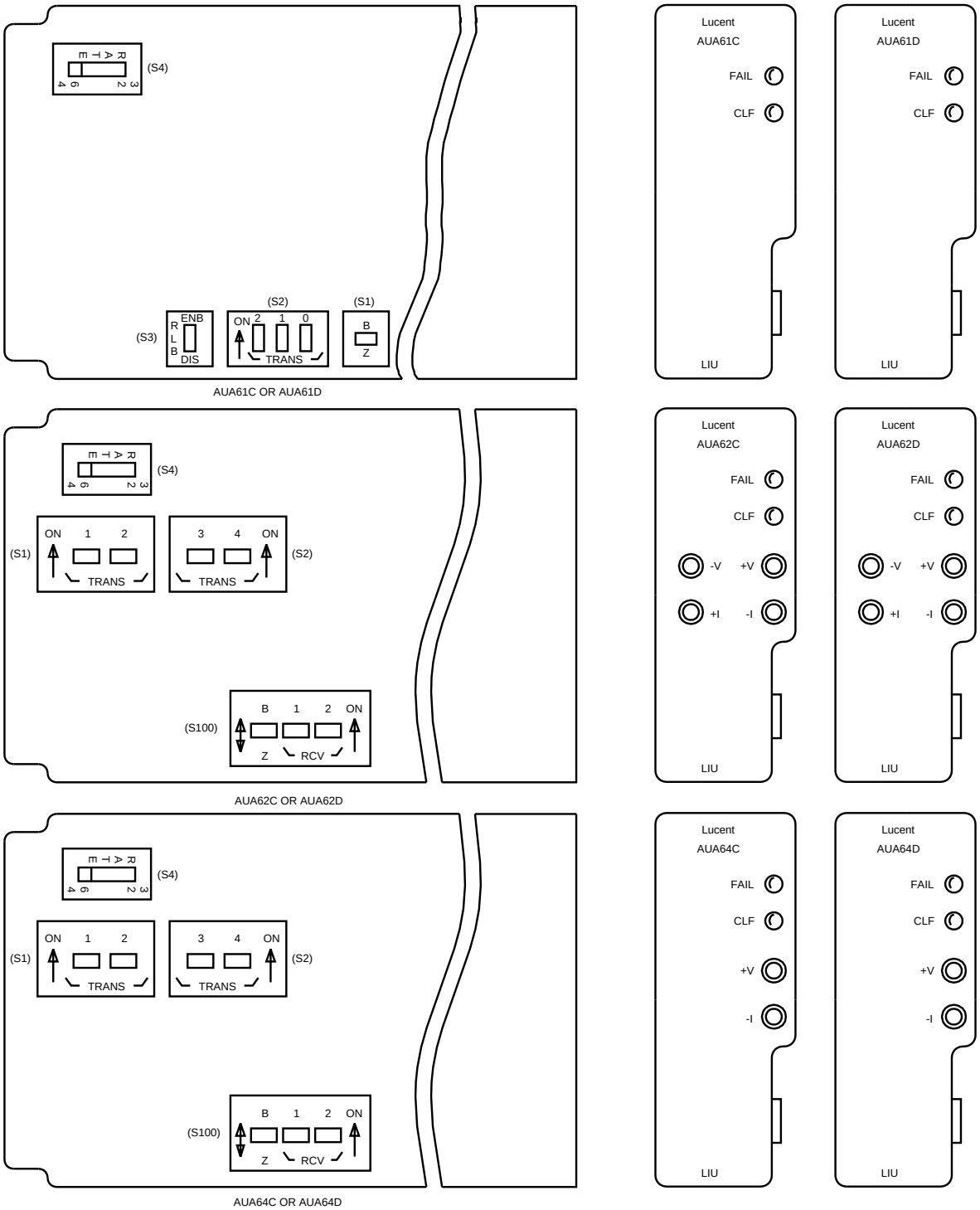


**Figure 1 – C- and D-Type LIU Option Switches and Faceplates**

| Table A<br>AUA61C or D<br>LIU Equalizer Settings | | | |
|---|---|---|---|
| **Distance to DSX-1** | **Equalizer Switch (S400/S2) Setting** | | |
| **(Feet)** | **2** | **1** | **0** |
| 0-132 | OFF | OFF | ON |
| 133-265 | OFF | ON | OFF |
| 266-398 | OFF | ON | ON |
| 399-532 | ON | OFF | OFF |
| 533-655 | ON | OFF | ON |

| Table B<br>AUA62C or D and AUA64C or D LIU Transmit/Receive Pad Setting | | | | | | |
|---|---|---|---|---|---|---|
| **Inserted Loss** | **Transmit Pad (S400/S1, S2) Switch Settings** | | | | **Receive Pad (S100) Switch Settings** | |
| **(dB)** | **1** | **2** | **3** | **4** | **1** | **2** |
| 22.5 | OFF | OFF | OFF | ON | — | — |
| 15.0 | OFF | OFF | ON | OFF | — | — |
| 7.5 | OFF | ON | OFF | OFF | OFF | ON* |
| 0 | ON | OFF | OFF | OFF | ON* | OFF |
| * ON when depressed toward the numbers. | | | | | | |

6.

**CAUTION:**
*Line coding on the digital facility and terminal equipment interfaces MUST BE THE SAME or service interruptions can result.*

Set the line coding switch (**S1** on the **AUA61C or D** or **S100** on the **AUA62C or D** or **AUA64C or D**) to **B8ZS** (Table C).

| Table C<br>LIU Line Coding Switch Setting | |
|---|---|
| **Option Description** | **LIU Switch (S1 or S100) Settings** |
| B8ZS Coding | B |
| ZCS Coding | Z |

7. Set the **RATE** switch (**S4**) to **64**.

**STOP. YOU HAVE COMPLETED THIS PROCEDURE.**

# Install AUA74 Line Switch Unit (LSU) in Facility Shelf

1. Get one **AUA74 LSU** (Line Switch Unit) and inspect for possible damage.

2. **CAUTION:**
   *Incorrectly set LSU option switches may result in immediate or future loss of service.*

   Set all eight force (**f**)/deny (**d**) switches on **LSU** faceplate to off (right-hand side) position (Figure 1).

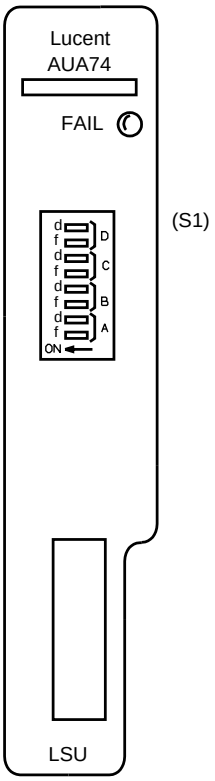


tpa 813554/01

**Figure 1 – AUA74 Line Switch Unit Faceplate**

While observing **FAIL** indicator on **LSU** faceplate, insert **LSU** into **LSU** slot in middle (for the blue bank) or right side (for white bank) of facility shelf.

Response: **LSU FAIL** indicator lights momentarily. **MN** and **NE** indicators on **ADU** are lighted.

3. Did **LSU FAIL** indicator light momemtarily and go off?

   If **YES,** then **STOP. YOU HAVE COMPLETED THIS PROCEDURE.**
   If **NO,** then continue with Step **4.**

4. Remove **LSU**.

5. **CAUTION:**
   *Incorrectly set LSU option switches may result in immediate or future loss of service.*

   Get a replacement **LSU** and set all eight force (**f**)/deny (**d**) switches on **LSU** faceplate to off (right-hand side) position (Figure 1).

6. While observing **FAIL** indicator on **LSU** faceplate, insert **LSU** into **LSU** slot in facility shelf.

   Response: **LSU FAIL** indicator lights momentarily and **MN** and **NE** indicators on **ADU** are lighted.

7. Did **FAIL** indicator on **LSU** light momentarily and go off?

   If **YES,** then **STOP. YOU HAVE COMPLETED THIS PROCEDURE.**
   If **NO,** then continue with Step **8.**

8. Remove **ADU** and check for proper option settings.

   Reference: DLP-523

9. Are option switches on **ADU** set correctly?

   If **YES,** then proceed to Step **12.**
   If **NO,** then continue with Step **10.**

10. Set option switches on **ADU** to correct positions and reinsert **ADU** into **ADU** slot.

11. Wait 20 seconds and then replace **LSU** with **LSU** removed previously and repeat from Step **3.**

12.

**CAUTION:**
*Incorrectly set ADU option switches may result in immediate or future loss of service or may introduce errors into the digital bitstream.*

Replace **ADU** with another correctly optioned **ADU**.

Reference: DLP-523

13. Wait 20 seconds and then replace **LSU** with the **LSU** removed previously while observing **FAIL** indicator on **LSU** faceplate.

14. Did **FAIL** indicator on **LSU** light momentarily and go off?

    If **YES,** then **STOP. YOU HAVE COMPLETED THIS PROCEDURE.**
    If **NO,** then continue with Step **15.**

15. Replace **ADU** with **ADU** removed previously.

16. Check wiring using SD-7C117-01 or SD-7C117-02. Repeat procedure from Step **3** after locating and correcting trouble.

# Perform RT Indicator Test

1. Press and hold **LED TEST** pushbutton on **ADU**.

2. Are all indicators listed in Table A lighted during LED test?

   If **YES,** then **STOP. YOU HAVE COMPLETED THIS PROCEDURE.**
   If **NO,** then continue with Step **3.**

| **Table A<br>Series 5 RT LED Test** | |
|---|---|
| **Unit** | **Indicator Lighted** |
| AUB27( ) ADU | All LEDs |
| BCU | All LEDs |
| TRU | All LEDs |
| LIU | All LEDs |
| CTU | FAIL |

3. Are any of the indicators lighted during LED test?

   If **YES,** then continue with Step **4.**
   If **NO,** then proceed to Step **5.**

4. ⚠ **CAUTION:**
   *Any time a circuit pack containing option switches is replaced in an RT assembly, ensure that any option switches are set per the work order or engineering records. Incorrectly set LIU, LSU, or ADU option switches may result in immediate or future loss of service or may introduce errors into the digital bitstream.*

   Replace unit(s) that contain indicators that do not light and repeat from Step **1.**

5. Replace **BCU**.

6. Press and hold **LED TEST** pushbutton on **ADU**.

7. Are all indicators listed in Table A lighted during LED test?

   If **YES,** then **STOP. YOU HAVE COMPLETED THIS PROCEDURE.**
   If **NO,** then continue with Step **8.**

8. Are any of the indicators lighted during LED test?

   If **YES,** then proceed to Step **4.**
   If **NO,** then continue with Step **9.**

9. Replace **BCU** with **BCU** removed previously.

10. ⚠ **CAUTION:**
    *Incorrectly set ADU option switches may result in immediate or future loss of service or may introduce errors into the digital bitstream.*

    Replace **ADU**. Verify that option switch settings on replacement **ADU** agree with option switch settings on **ADU** being replaced.

11. Press and hold **LED TEST** pushbutton on **ADU**.

12. Are all indicators listed in Table A lighted during LED test?

    If **YES,** then **STOP. YOU HAVE COMPLETED THIS PROCEDURE.**
    If **NO,** then continue with Step **13.**

13. Are any of the indicators lighted during LED test?

    If **YES,** then proceed to Step **4.**
    If **NO,** then continue with Step **14.**

14. ⚠ **CAUTION:**
    *Incorrectly set ADU option switches may result in immediate or future loss of service or may introduce errors into the digital bitstream.*

    Replace **ADU** with **ADU** removed previously.

15. Refer to SD-7C117-01 or SD-7C117-02. Repeat procedure from Step **1** after locating and correcting trouble.

# Turn Up Fiber to the Home DT

## Overview

This Tab section provides procedures to equip and turn up Fiber to the Home (FTTH) distant terminals (DTs). These procedures assume the *Acceptance Tab procedures* have been done.

For these procedures FTTH DT refers to a 900A1, 900A2, or 900A3 type DT. The 900A1 DT is AC powered, while the 900A2 and 900A3 DTs are DC back powered from the customer premises. See Figures 1 and 2.

The procedures to turn up *SLC*-2000 Multi-Services Distant Terminals (MSDTs) are found in 363-205-004.

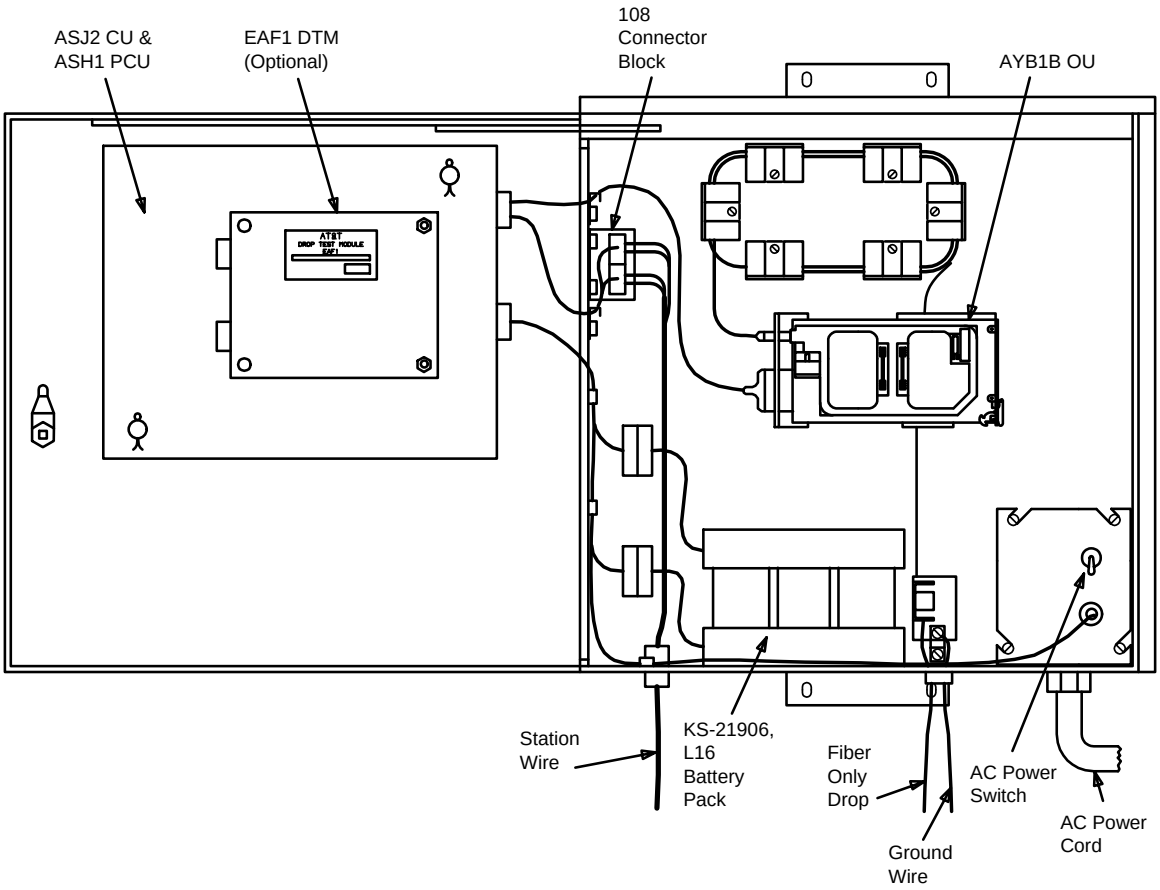


**Figure 1 – 900A1 Distant Terminal Closure**

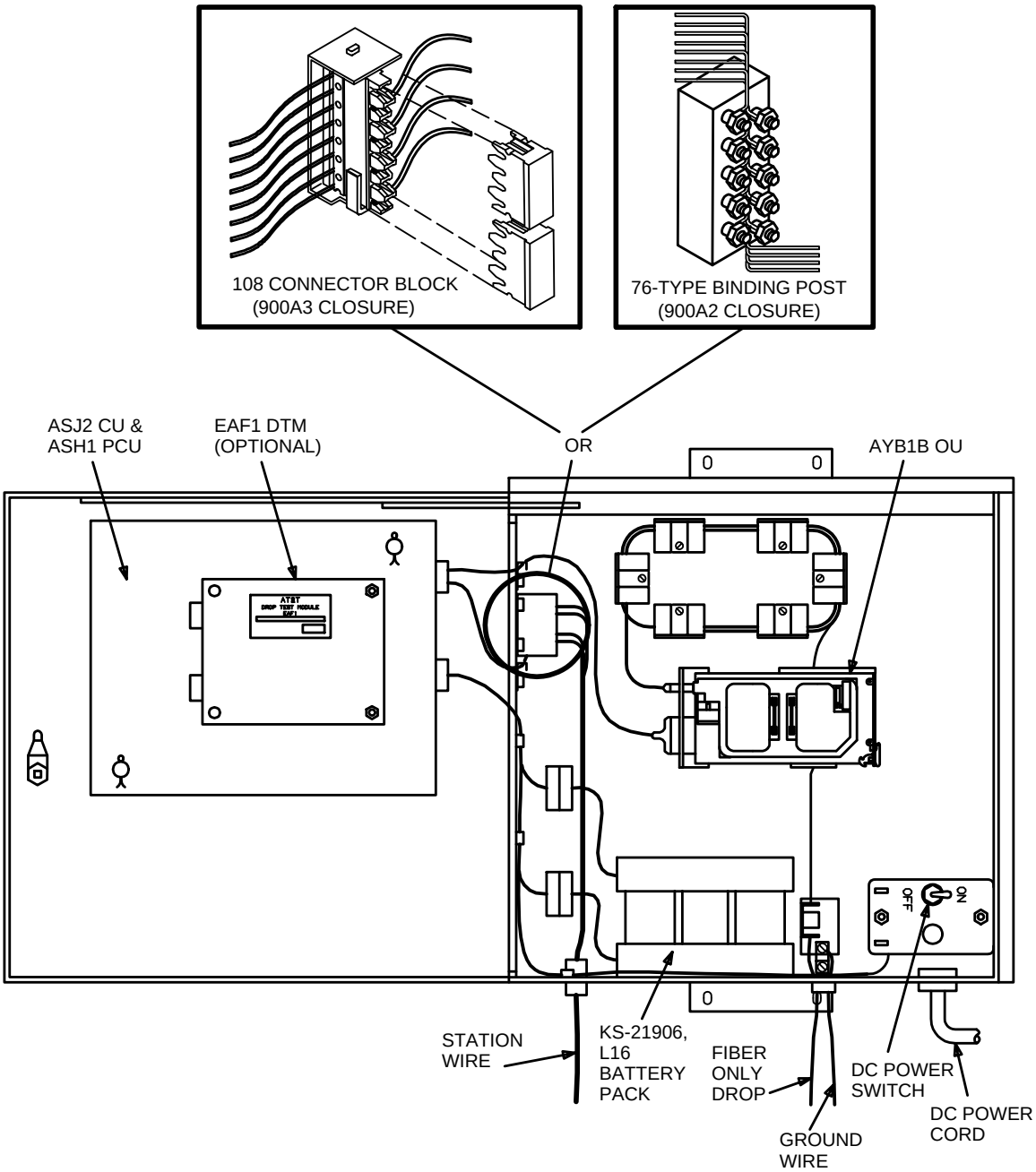


**Figure 2 – 900A2 and 900A3 Distant Terminal Closure**

# DT Turn Up
# Task Index List

---

**FIND YOUR JOB IN THE LIST BELOW . . . . . THEN GO TO#**

---

**NOTE:**
Power to the DT enclosure (120 V AC or -48 V DC local powering) must be available before these procedures can be done.

Acceptance. . . . . NTP-002
Turn Up Series 5 Fiber to the Home 900A( ) Distant Terminal. . . . . NTP-003

**NOTE:**
System tests for the 900A( ) DT are found in 365-205-406 End-To-End TOP.

# Acceptance

## OVERVIEW

Acceptance tests are performed to ensure proper installation procedures have been performed. The acceptance procedures are found in the Acceptance Tab section of this document. These procedures should be done before the equipment is turned up.

# Turn Up Series 5 Fiber to the Home 900A( ) Distant Terminal

| DO ITEMS BELOW IN ORDER LISTED | FOR DETAILS, GO TO |
|---|---|

1.

**NOTE:**
This procedure assumes the following tasks have been performed:

- That required circuit packs to be installed in 900A1, 900A2, or 900A3 DT closure are available
- That a visual inspection has been made for physical damage to equipment in the 900A1, 900A2, or 900A3 DT closure
- That a visual inspection has been made of the electrical and optical cabling and interconnections at the 900A1, 900A2, or 900A3 DT closure
- That 900A1 network interface unit (NIU) has been inspected, or the 900A2 or 900A3 pedestal protector panel has been inspected
- That the fiber drop is terminated with an *ST*u®d connector and connected to the **AYB1B OU** backplane coupler
- That 120 V AC is supplied to the 900A1 DTs
- That 900A1 DT closure power cord conduit is attached to AC outlet box and that power plug is not plugged in
- That the customer premises DC power source has been established, and the pedestal DC power interface has been turned up (for 900A2 or 900A3 DTs)
- That facility between COT and DT has not been connected end-to-end

**DO ITEMS BELOW IN ORDER LISTED** **FOR DETAILS, GO TO**

- That acceptance procedures for multiple DT arrangements (common AC power source or pedestal) in this volume have been performed (if required)
- That 900A1, 900A2, or 900A3 DT acceptance procedures in this volume have been performed.

Obtain support apparatus listed below:

- Special key (allen-type wrench) - COMCODE 846244168
- J99407TA analyzer kit
- Cleaning swabs
- Bottle of isopropyl reagent alcohol with dispenser
- Can of compressed air
- DMM (digital multimeter) with an AC (true rms) and DC meter accuracy of 1.0% and an AC and DC input impedance of ≥ 1 megohm.

2.

**CAUTION:**
*An electrostatic discharge wrist strap with a minimum resistance of 250K Ohms should be worn when handling Series 5 circuit packs to prevent possible damage to the circuit packs. Before using the wrist strap, check it for opens, shorts, and minimum resistance value. If the strap does not pass these checks it should not be used. To avoid possible personal injury while using the wrist strap, do not connect it to the power shelf or adjacent portions of the RT frame. Connect the wrist strap to ESD GRD jack on the fan unit, if present. If grounding jack is not present, connect wrist strap to bare-metal section of the frame well away from the power shelf.*

**NOTE:**
Multiple DTs may be located in a cluster arrangement enclosure or pedestal.

Unlock 900A1, 900A2, or 900A3 DT closure using special hex key (allen-type wrench), if necessary.

3. Verify that 900A1, 900A2, or 900A3 DT **POWER** switch is set to **OFF** position.

| DO ITEMS BELOW IN ORDER LISTED | FOR DETAILS, GO TO |
|---|---|
| 4. Connect power to DT | |
| A. At AC outlet box, insert 900A1 DT power plug into AC outlet. | |
| B. At pedestal DC power interface, connect 900A2 or 900A3 DT power cord and customer DC power feed pair if not already done. | DLP-500 |
| 5. **NOTE:** Do not connect J104 to the batteries at this time.<br><br>Install 900A1, 900A2, or 900A3 DT batteries in tray in bottom of DT closure. | |
| 6. Install **ASH1 PCU**. | DLP-501 |
| 7. If required, install **EAF1** drop test module on **ASJ2** channel unit. | DLP-502 |
| 8. Install **ASJ1** or **ASJ2** channel unit and secure. | DLP-503 |
| 9. **NOTE:** If electrical connector J105 is not connected to P105 on the **AYB1B** optical unit backplane, make the connection at this time. When making the connection verify that the top of the J105 connector (labeled **TOP**) is oriented properly.<br><br>Install **AYB1B** optical unit. | DLP-504 |
| 10. Power up DT. | DLP-505 |
| 11. Measure voltages at **ASH1 PCU** faceplate. | DLP-506 |
| 12. Close and lock the AC outlet box. (900A1 DT only) | |
| 13. Close and lock the 900A1, 900A2, or 900A3 DT closure unless end-to-end tests are to be performed at this time. Close pedestal or DT enclosure if necessary. | |
| 14. Update office records. | |

# Turn Up or Add Customer DC Back Powering For 900A2 or 900A3 Distant Terminal

1. Use a 216C tool to open (loosen the lock nuts and pivot the top over) the pedestal containing 900A2, or 900A3 DTs and DC power module (Figure 1).

   Comment: DT power cord connections, DC power protector installation, and DC power pair connections can be made on an "as required basis." The DC power feed pairs (and required protectors) should be connected top to bottom.

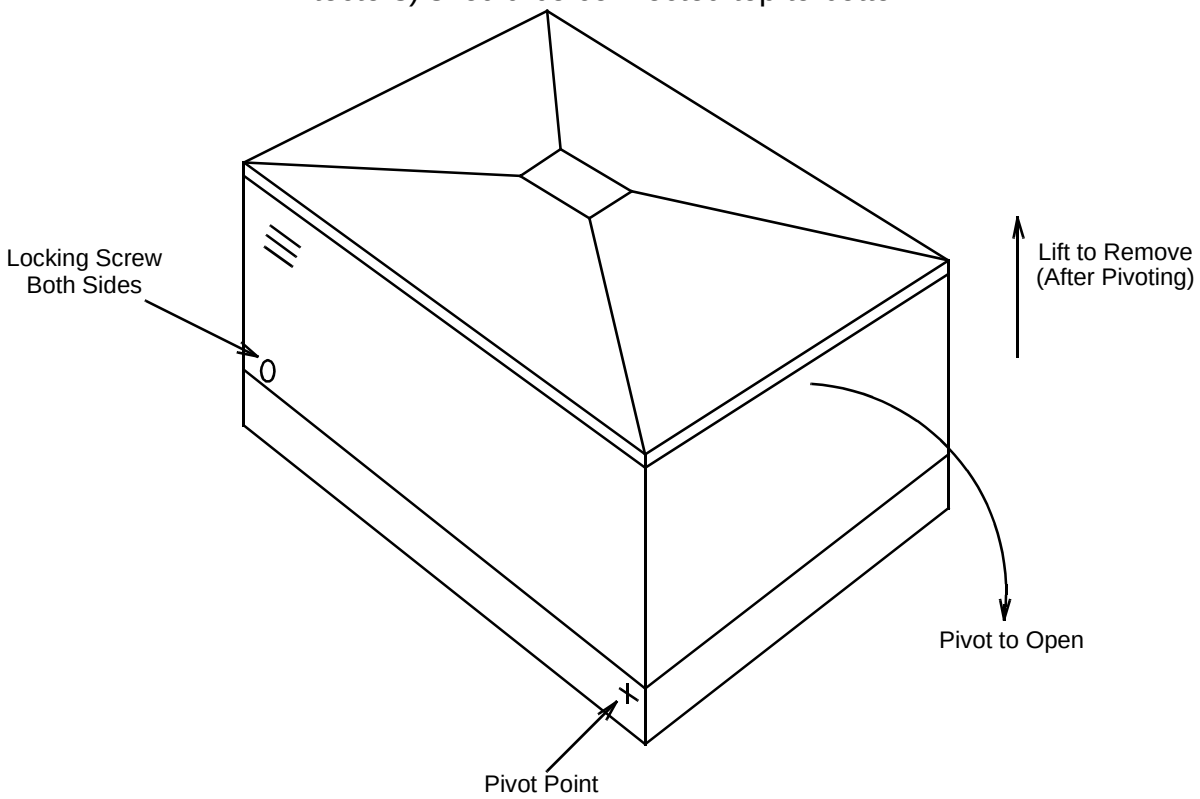


**Figure 1 – Low Profile DT Pedestal with DC Back Powering**

2. Remove cover to DC power interface by loosening the screw at the bottom of the box, sliding the bottom out, and pushing down.

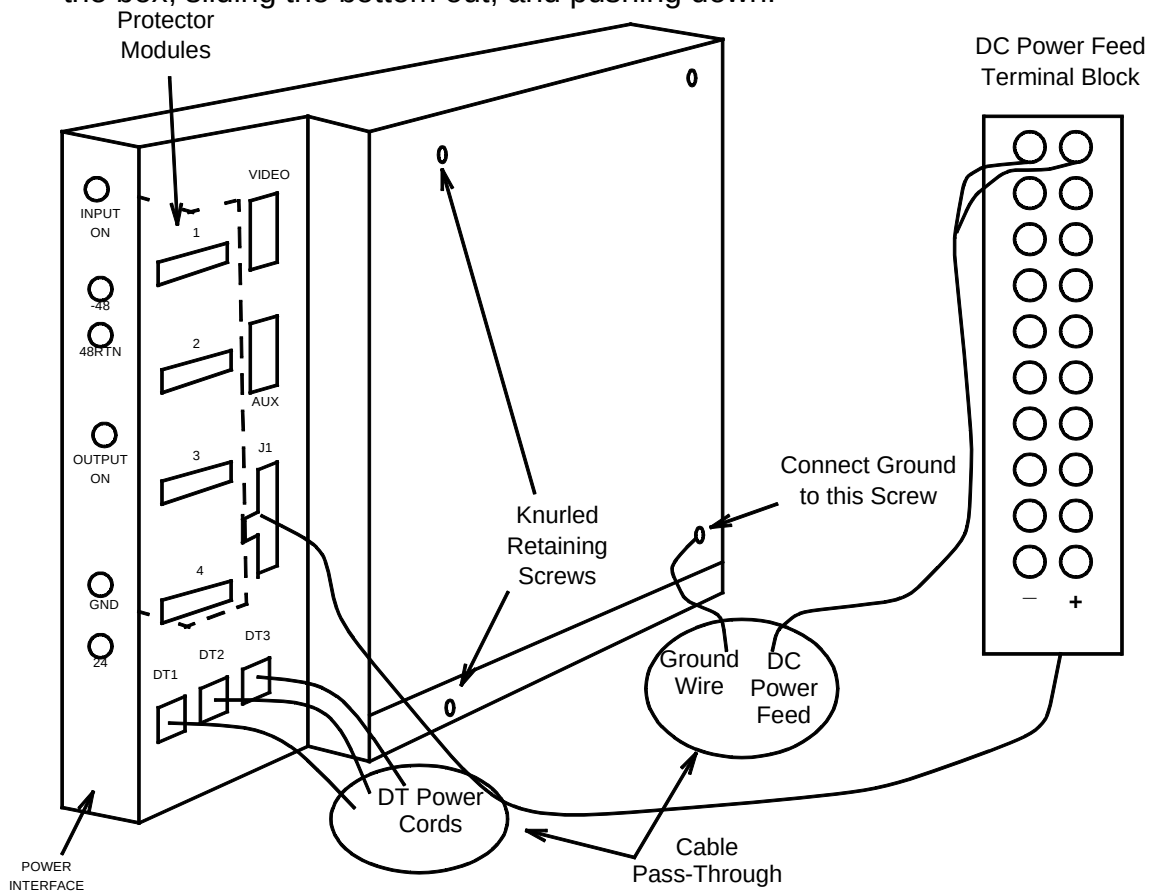


**Figure 2 – DC Power Interface Connections**

3. Verify or make connections to the DC power module (Figure 2) as follows:
   - Ground connection to the DC power interface circuit pack.
   - 8-pair cable from DC drop terminal to **J1**.
   - DC power cord for DT 1 to **DT1**.
   - DC power cord for DT 2 to **DT2**.
   - DC power cord for DT 3 to **DT3**.
   - DC power cord for video equipment (if required) to **VIDEO**.

4.

**NOTE:**
The DC power feed pairs must be connected starting from the top down on the 10 pair terminal block. A DC protector module (with components up) must be installed with each of the first four DC power feed pair, starting from the top (J5) to bottom (J2), on the DC power interface circuit pack. Remove the plastic guard to install the DC protectors. Only the first four DC power feed pairs require installation of protectors. The second four DC power feed pairs share the first four protectors (for example, DC pairs 1 and 5, 2 and 6).

Verify or install (install protector with the components facing up) DC feed protector cards on DC power module from 10-pair terminal block as follows:

- For the top DC power feed terminal pair: DC protector card in **PROTECTOR MODULE 1**.
- For the next DC power feed terminal pair down: DC protector card in **PROTECTOR MODULE 2** jack.
- For the third DC power feed terminal pair: DC protector card in **PROTECTOR MODULE 3** jack.
- For the fourth DC power feed terminal pair: DC protector card in **PROTECTOR MODULE 4** jack.
- The fifth through eighth DC power feed terminal pairs must be connected after the first four pairs.

5. At the 10-pair DC feed terminal block, connect customer DC feed pair starting at the top and working down, and note the polarity (+ ground, -48 V DC) of the connection.

6. At customer premises DC power supply (Jermome -48 V DC source installed per local options), verify -48 (38 to 63) V DC has been established. Make the DC power feed pair connection with the same polarity as made in the previous step. (See 363-205-002, *SLC* Series 5 Fiber to the Home User's Manual).

7. At the pedestal 10-pair DC feed terminal block, verify -48 (38 to 63) V DC between ground (+ terminal) and (- terminal) as required.

Comment: Feeder voltage trouble must be cleared before proceeding.

8. Measure DC power module faceplate DC voltages. Check DC power feed (from customer premises) if voltage IN requirements are not met. If voltage OUT requirements are not met, replace DC protector card, then replace DC power module.

   Requirement: **48RTN** to **-48**, 38 to 63 V DC (about 2 volts less than measured at the DC feed terminal block). (36 to 63 if video is connected.)
   **24** to **GND**, 22 to 26 V DC.

9. Open 900A2 or 900A3 DT encloser. Turn power switch ON and verify power LED lights. Then turn power switch OFF and close DT. If power LED does not light, verify DT power cord is connected to the DC power module, then replace DT.

10. Repeat this procedure for next DT/customer power feed as required.

11. Replaces DC power interface cover. Close and secure DT pedestal (if not performing turnup procedures at this time).

    **STOP. YOU HAVE COMPLETED THIS PROCEDURE.**

# Install ASH1 Power Converter Unit (PCU) in 900A1, 900A2, or 900A3 DT Closure

1. Get one **ASH1 PCU** and inspect for physical damage.

2. Align holes on side of PCU board with stand off pins located on inside of 900A1, 900A2, or 900A3 DT closure door (Figure 1) and slide PCU board onto pins.

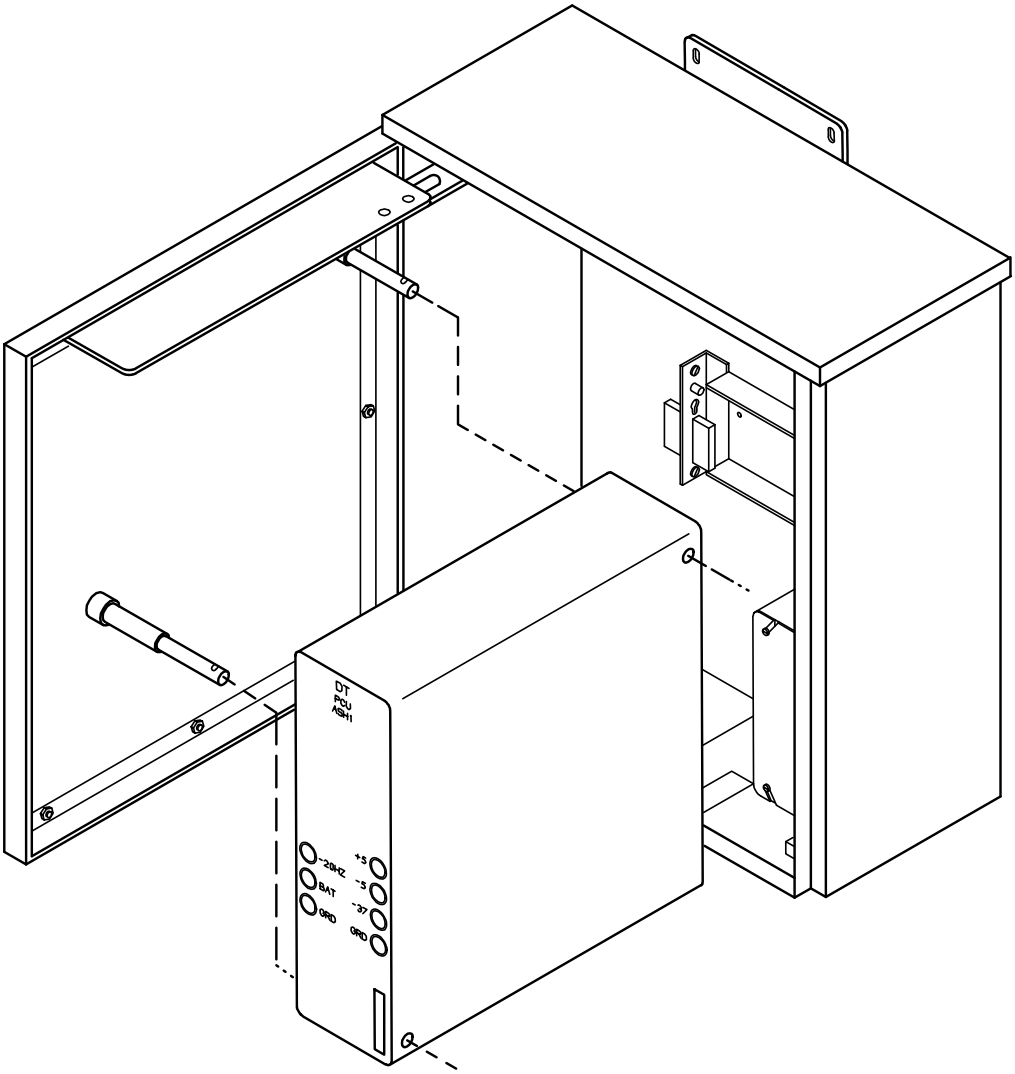


**Figure 1 – Installation of PCU in 900A1, 900A2, or 900A3 DT Closure**

3. Check that DT power is turned off.

4. At rear of PCU, insert connector J101 and J102 into connector P101 and P102, respectively.

**STOP. YOU HAVE COMPLETED THIS PROCEDURE.**

# Install EAF1 Drop Test Card on ASJ2 Channel Unit At Distant Terminal

1. Turn DT power switch OFF.

2. On the right side of the **ASJ2** channel unit, remove the cover plate by taking off the nut. Save the nut and discard the cover plate.

3. On the side of the **ASJ2** channel unit (Figure 1), insert the **EAF1** drop test module in the jack by sliding the flaps under the retaining slots, aligning the 20 pin connector, and pressing the **EAF1** on to the **ASJ2**. Use the nut to secure the **EAF1**.

4. Turn DT power switch ON *only if the battery pack is connected.*

   **STOP. YOU HAVE COMPLETED THIS PROCEDURE.**

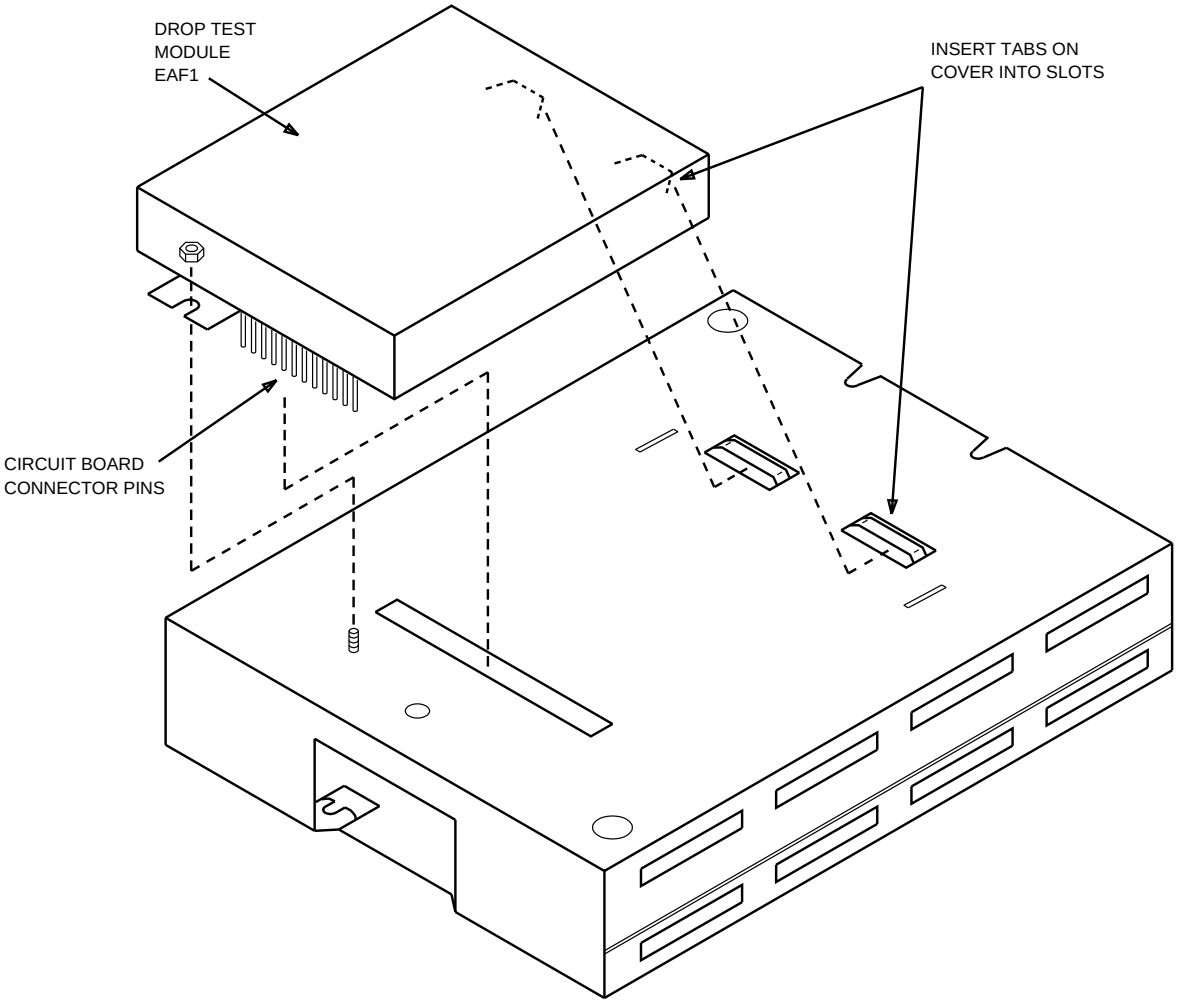


**Figure 1 – EAF1 Drop Test Module Installed on ASJ2**

# Install ASJ1 or ASJ2 Channel Unit in 900A1, 900A2, or 900A3 DT Closure

1. Get one **ASJ1** or **ASJ2** Channel Unit and inspect for physical damage.

2. Align the holes on the side of the CU board with the stand off pins located on inside of 900A1, 900A2, or 900A3 DT closure door (Figure 1) and slide the CU board onto the pins.

3. Secure the PCU and CU boards on the stand off pins by inserting cotter pins into the holes in the ends of the pins.

4. Check that DT power is turned off.

5. Insert connector J103/J107 into connector P103 located at the rear of the CU.

   **STOP. YOU HAVE COMPLETED THIS PROCEDURE.**

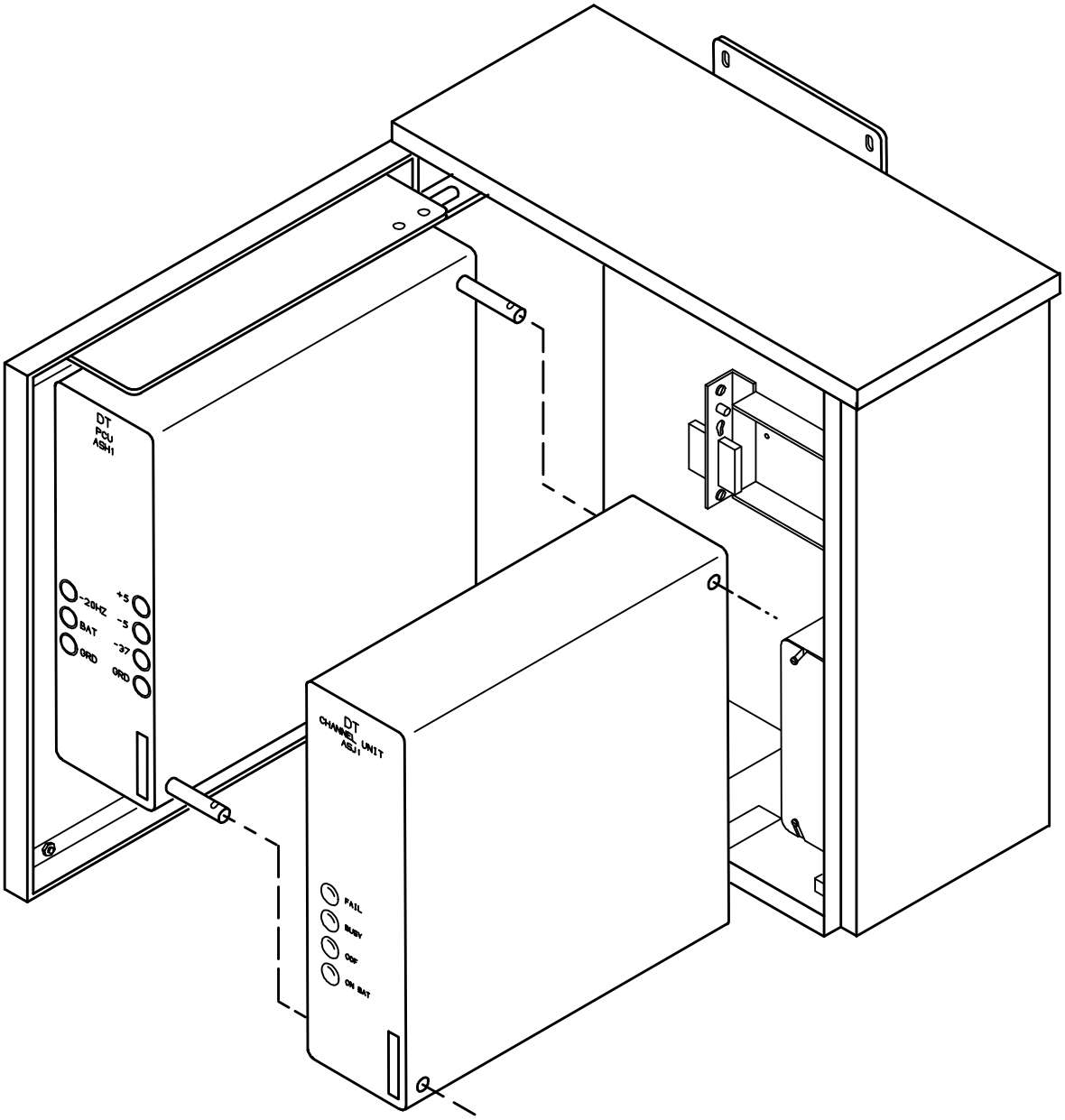


**Figure 1 – Installation of ASJ1 or ASJ2 CU in 900A1 DT Closure**

# Install AYB1B Optical Unit in 900A1, 900A2, or 900A3 DT Closure

1. Apply alcohol to tip of cleaning swab and clean optical coupling located on optical unit backplane.

2. Use compressed air to dry optical coupling.

3. Get one **AYB1B OU** (optical unit) and inspect for physical damage.

4. Remove protective cover from optical connector on **AYB1B OU**.

5. Clean optical connector on **AYB1B OU** using a *Kimwipes** [1]wiper moistened with alcohol. Dry the optical connector using compressed air.

6. Open the locking latch on the front of the **OU**.

7. Insert the **OU** into the track located on the rear wall of the 900A1, 900A2, or 900A3 DT closure (Figure 1) and slide it toward the left side of the DT closure until both electrical and optical connectors are mated and the board is locked in place.

   **STOP. YOU HAVE COMPLETED THIS PROCEDURE.**

1. Registered trademark of Kimberly-Clark Corp.

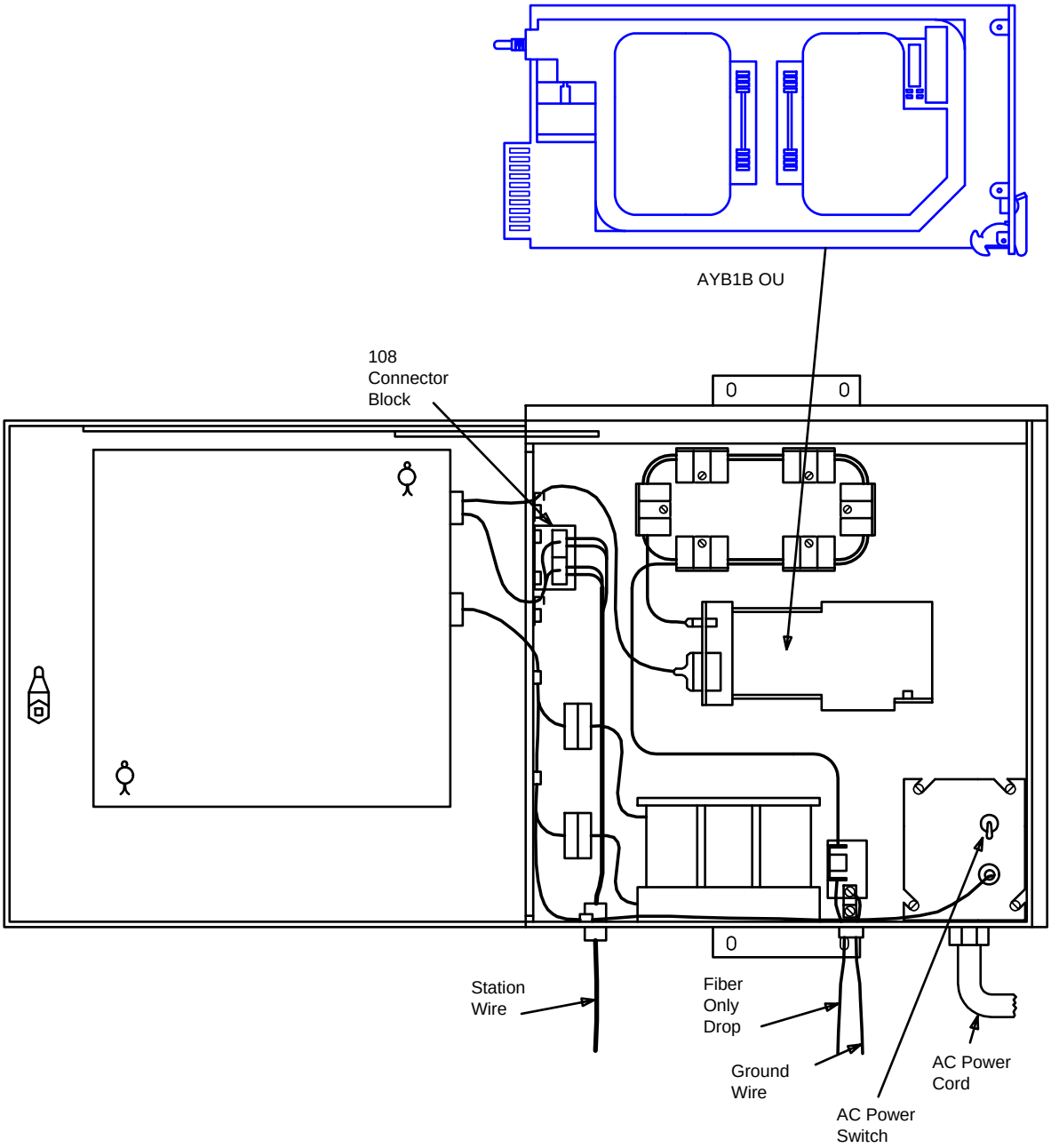


**Figure 1 – Installation of AYB1B OU in DT Closure**

# Power Up 900A1, 900A2, or 900A3 DT

1. While observing indicators on **ASJ1 or ASJ2 CU**, turn DT power switch to **ON** position.

   Comment: This assumes power to the DT has been established.

   Response: All indicators light momentarily and extinguish. **OOF** stays lighted.

2. Did all indicators light momentarily and the **OOF** indicator remain lighted?

   Comment: The 900A2 or 900A3 DT power LED will light.
   The OOF light will go off if the fiber facility and RT is already established.

   If **YES,** then proceed to Step **5**.
   If **NO INDICATORS LIGHTED,** then continue with Step **3.**
   If **ALL INDICATORS REMAIN LIGHTED,** then proceed to Step **4.**

3. Turn DT power off. Then replace the items below in the order listed until all indicators are off except **OOF**:

   - **ASH1 PCU** (power converter unit)
   - **ASJ1 or ASJ2 CU**
   - **AYB1B OU** (optical unit)
   - 900A1, 900A2, or 900A3 DT closure.

   After proper power indication is achieved, proceed to Step **5**.

4. Turn DT power off and replace **ASJ1** or **ASJ2 CU** and repeat this procedure from Step **1**. (Perform Step 3 the second time through if all indicators remain lighted after the **ASJ1/ASJ2** has been replaced).

5. Connect battery pack **J104** to **P104**.

6. Turn off DT power and observe the **ON BAT** indicator.

7. Did the **ON BAT** indicator light?

   If **YES,** then proceed to Step **9**.
   If **NO,** then continue with Step **8.**

8. Replace the following items in the order listed below until the **ON BAT** indicator lights:

   - Battery pack
   - **ASH1**
   - **ASJ1** or **ASJ2**.

9. **CAUTION:**
   *DO NOT leave battery pack connected with DT power switch OFF. The battery pack may be damaged and need to be replaced.*

   Turn DT power switch ON.

   Response: **ON BAT** indicator goes off.

   **STOP. YOU HAVE COMPLETED THIS PROCEDURE.**

# Measure Voltages at ASH1 PCU Faceplate

1. Condition DMM to measure volts DC.

2. On **PCU** faceplate, connect DMM test leads to **GND** jack and **+5** jack.

3. Does DMM indicate between 4.6 and 5.4 volts?

   If **YES,** then continue with Step **4.**
   If **NO,** then proceed to Step **8.**

4. On **PCU** faceplate, connect DMM test leads to **GND** jack and –**5** jack.

5. Does DMM indicate between –4.6 and –5.4 volts?

   If **YES,** then continue with Step **6.**
   If **NO,** then proceed to Step **8.**

6. On **PCU** faceplate, connect DMM test leads to **GND** jack and –**37** jack.

7. Does DMM indicate between –34 and –40 volts?

   If **YES,** then proceed to Step **9.**
   If **NO,** then continue with Step **8.**

8. Inspect, repair, and/or replace the following items in the order listed until the correct voltage reading is obtained:

   - **ASH1 PCU**
   - Wiring between **PCU** and DT transformer for 900A1 DT
   - Wiring between DT **PCU**s and power interface for 900A2 or 900A3 DTs
   - **AYB1B OU**
   - **ASJ1 or ASJ2 CU**
   - DT.

9. On **PCU** faceplate, connect DMM test leads to **GND** jack and **BAT** jack.

10. Does DMM indicate between 13.8 and 15.0 volts?

    If **YES,** then **STOP. YOU HAVE COMPLETED THIS PROCEDURE.**
    If **NO,** then continue with Step **11.**

11. Inspect, repair, and/or replace the following items in the order listed until the correct voltage reading is obtained:

    - **PCU**
    - Wiring between battery pack and **PCU**
    - Battery pack.

# Converting RT Channel Bank Feature Package Introduction

This Tab provides procedures to convert a remote terminal (RT) system (blue or white) from one feature package to another. Procedures for adding or removing protection line digital facility are also included.

## Feature Packages

The *SLC*® Series 5 carrier system offers a variety of system configurations offering POTS only, special services, concentration, and integration. These configurations are called feature packages. The feature package is selected by the choice of bank control unit (BCU), alarm display unit (ADU) and option settings on the ADU. The choice of supporting common units [transmit/receive unit (TRU), line interface unit (LIU), channel test unit (CTU), digital test unit (DTU), line switch unit (LSU), and transcoder unit (TCU)] is determined by the feature package configuration.

The following is a list of feature packages that are available:

- Feature Package B (FPB) offers four basic configurations for universal or integrated applications.
    1. Mode 1 without special services, no concentration.
    2. Mode 1 with special services, no concentration.
    3. Mode 2 without special services, 2-to-1 concentration.
    4. Mode 2 with special services, 2-to-1 concentration.
- Feature Package C offers POTS and special services, no concentration.
- Feature Package C AutoCut offers POTS and special services, no concentration, and converts to FPB Mode 1 automatically when central office (CO) is cut over.

## Preparation

Preparing for a conversion may involve adding or rearranging digital facilities, grooming special service circuits, performing office-to-office tests, and reassigning customer service in the CO switching equipment. The reason a system is converted

from one feature package to another varies, but is usually done because of changes in customer service requirements or enhancements to central office switching equipment. The amount of preconversion testing and preparation depends mostly on why the conversion is necessary. For example, converting a FPA to FPC to add special service capability does not require any preparation. Converting a Feature Package D (FPD) to an integrated FPB mode 2 for an office cutover may require extensive testing. In any case, all of the pre-conversion activities take place at the central office/digital facility end of the system, with the exception of grooming.

Grooming of special service circuits may be required when converting to an integrated FPB Mode 1 or Mode 2 system or a universal FPB Mode 2 system. A mode 2 RT has channel slot (right 4 slots per digroup) restrictions. The non-switched circuit may have to be rerouted for integrated systems. 363-205-402 Channel Unit Installation TOP provides the procedures to provision special services channel units. This type of grooming and preservice testing of rearranged digital facilities are the only preconversion activities required at the RT. This document assumes all preconversion activities are completed and provides only the procedures necessary to convert an RT system's feature package equipage. 363-205-108 document provides Automatic Office to Office testing procedures used prior to converting a FPA or FPC to FPB Mode 1 system configuration.

## Service Interruption

Some conversions do not interrupt service while others will interrupt service for the whole RT system. The procedures in this Tab are separated into the amount of service interruption caused by the conversion activity. The following is a summary of the severity of service interruption:

- None. These conversions do not affect active calls
  FPA to FPC or FPC-AutoCut,
  FPC to FPC-AutoCut,
  FPB Mode 2 without special service to FPB Mode 2 with special service.
- Temporary. These conversions affect active calls on 1 or 2 digroups only when common circuit packs are replaced (how long it takes to replace the pack). Service to the system will be down while both ends change configurations. These procedures require CO personnel to perform conversion procedures at the same time to minimize down time. Universal systems can be converted very quickly while integrated systems take longer.
  FPB Mode 2 to FPB Mode 1 with/without special service.
  FPB Mode 1 to FPB Mode 2 with/without special service.
  FPB Mode 1 without special service to FPB Mode 1 with special service. This does not require CO personnel and only affects digroup A.
- Total down time. These conversions affect active calls on all digroups until both ends complete conversion activities.
  FPD to any other feature package.

## Logical Progression

One of the most common conversions is FPA or FPC to integrated FPB mode 1 during an office cutover. All that is needed is to first convert the system to FPC-AutoCut and the RT will automatically change to FPB mode 1 when the office cutover happens. But if the final configuration is FBP Mode 2, you should first convert to FPC-AutoCut with the appropriate common units at the RT. Then when the cutover starts, all that is needed at the RT is to change ADU options and pull two LIU packs.

When converting FPD to FPB Mode 2, you can save provisioning data (groomed to the right four channel unit slots for each digroup using the CIU provisioning copy command) by first converting the system to FPC (changing ADU options at both ends), and then to FPC-AutoCut (changing RT ADU and BCU packs). After the provisioning data has been down loaded to the RT ADU and BCU (ignore DIGROUP alarms), change the RT ADU option to Mode 2, and connect the digital lines to the Mode 2 central office equipment or convert the COT to FPB Mode 2 COT.

# RT Channel Bank Conversions Task Index List

## FIND YOUR JOB IN THE LIST BELOW . . . . . THEN GO TO

Acceptance . . . . . NTP-002
Convert Series 5 RT from Feature Package A Capability to
Feature Package C Capability . . . . . NTP-003
Convert Feature Package A or C RT to Feature Package C-AutoCut . . . . . NTP-004
Convert Series 5 RT from Feature Package B Mode 2 to
Feature Package B Mode 1 . . . . . NTP-005
Convert Series 5 RT from Feature Package B Mode 1 to
Feature Package B Mode 2 . . . . . NTP-006
Add Special Service Capability to Feature Package B RT . . . . . NTP-007
Add or Remove Protection Line Option . . . . . NTP-008
Convert Series 5 RT to Any Feature Package Capability
Generic Procedures . . . . . NTP-009
Convert Feature Package B Mode 1 or Mode 2 to
Feature Package 303 . . . . . NTP-010
Reinstate Feature Package B Following a Failed Conversion to
Feature Package 303 . . . . . NTP-011
Verify That Correct Complement of Circuit Packs is Available . . . . . DLP-500

CAUTION:
*In dusty areas (for example, near construction sites), Lucent Technologies recommends tenting the RT cabinet to protect electronic equipment whenever cabinet doors are open for extended periods.*

# Acceptance

The conversion acceptance procedures are used to verify the preconversion activities have been completed before the RT end is converted.

1. Verify that the RT channel bank is compatible with the new feature package as follows:
   - The J1C182AB bank assembly will support FPA, FPB, and FPC. It will not support FPD, FTTH, or E&M lead applications.
   - The J1C182AE bank assembly will support FPA, FPB, FPC, FPD, and FTTH. It will not support E&M lead applications.
   - The J1C182AF bank assembly will support FPA, FPB, FPC, FPD, and FTTH. It does support E&M lead applications.
2. Verify that any preconversion activities have been done as follows:
   - New digital facilities have been tested.
   - Any required customer service grooming has been done.
   - Office-to-office testing (if required) has been done.
   - The RT system does not have any alarm conditions.

# Convert Series 5 RT from Feature Package A Capability to Feature Package C Capability

| DO ITEMS BELOW IN ORDER LISTED | FOR DETAILS, GO TO |
|---|---|

1.

**NOTE:**
To avoid incompatibility between a Series 5 RT bank assembly and the associated COT bank assembly during the conversion of a Series 5 carrier system from FPA to FPC capability, both the RT and COT bank assemblies must be converted.

2. Verify that the following circuit packs are available: DLP-500

- **MC97756A1 BCU**
- **AUB26 ADU**
- **AUB25 CTU** (if XTC is used)
- **AUA18 DTU-L**
- **AUA19 DTU-R**.

3.

**CAUTION:**
*An electrostatic discharge wrist strap with a minimum resistance of 250K Ohms should be worn when handling Series 5 circuit packs to prevent possible damage to the circuit packs. Before using the wrist strap, check it for opens, shorts, and minimum resistance value. If the strap does not pass these checks it should not be used. To avoid possible personal injury while using the wrist strap, do not connect it to the power shelf or adjacent portions of the RT frame. Connect the wrist strap to ESD GRD jack on the fan unit, if present. If grounding jack is not present, connect wrist strap to bare-metal section of the frame well away from the power shelf.*

| DO ITEMS BELOW IN ORDER LISTED | FOR DETAILS, GO TO |
|---|---|

**NOTE:**
Removing the following units will not interrupt service on a working system.

Remove the following circuit packs, in the order listed, from the RT system being converted:

- **ADU** (alarm display unit) (note option switch settings)
- **BCU** (bank control unit)
- **CTU** (channel test unit).

| | | |
|---|---|---|
| 4. | Install **AUB26 ADU**. | DLP-501 |
| 5. | Install **BCU**. | DLP-502 |
| 6. | Install **CTU**. | DLP-503 |
| 7. | Install **DTU** (digital test unit). | DLP-504 |
| 8. | Update office records. | |

# Convert Feature Package A or C RT to Feature Package C-AutoCut

| DO ITEMS BELOW IN ORDER LISTED | FOR DETAILS, GO TO |
|---|---|

**SUMMARY:** Feature Package C-AutoCut is used prepare an universal FPC system to be cutover to a integrated FPB Mode 1 system. The integrated FPB system requires ZCS (zero code suppression, sometimes referred to as AMI) digital line coding be used on the digital facility, including multiplexer facilities if used. This procedure will equip an RT channel bank to support FPC-AutoCut with minimum service interruption. All LIUs must be optioned for ZCS line coding (facility equipment must also use ZCS) and the RT channel bank must use AUA6( )C or AUA6( )D version LIUs. If a protection line is not used, service will be interrupted when the LIU is removed. Next, the system must be equipped with FPC-AutoCut ADU and BCU units at RT (the COT must use the MC97755A1 BCU, not the MC97725A1 BCU). Wait 15 minutes after the system is equipped for FPC-AutoCut. Next the RT must be equipped with AUA105 or AUA109 TRUs. This will interrupt service on digroups AB or CD while the TRU is removed. This procedure requires craft personnel at both the COT and RT location if B8ZS line coding is used and should be done at the same time at both ends. One craftsperson can convert the system *only* if ZCS line coding option is already used. The AUA6( )D version LIUs and AUA105 TRUs should be used if the system will be converted to Mode 2 sometime in the future.

**NOTE:**
To avoid incompatibility between a Series 5 RT bank assembly and the associated COT bank assembly during the conversion of a Series 5 carrier system from FPA to FPC AutoCut capability, both the RT and COT bank assemblies must be converted.

1. Establish communication with craft personnel at COT location.

2. From office records, determine what LIU digital line coding option (B8ZS option **B** or ZCS option **Z**) is used for the system being converted to FPC-AutoCut. If ZCS coding is used, AUA6( )C or AUA6( )D LIUs, proceed to Step **4**. Otherwise, continue with Step **3**.

| DO ITEMS BELOW IN ORDER LISTED | FOR DETAILS, GO TO |
|---|---|
| 3. **CAUTION:** *Both the COT and RT (and all multiplexer interfaces) must be set to ZCS at the same time to avoid service interruption.* | |
| Change AUA6( )C or AUA6( )D LIUs line coding option, one digroup at a time, from **B** (B8ZS) to **Z** (ZCS) for each equipped digroup in the system. | DLP-505 |
| 4. **NOTE:** Removing the following units will not interrupt service on a working system. | |
| **NOTE:** A FPA COT should be converted to FPC AutoCut at or about the same time the RT is converted to avoid possible service interruption. | |
| Remove the following circuit packs, in the order listed, from the RT bank being converted:<br>• **ADU**<br>• **BCU**<br>• **CTU** | |
| 5. Remove **BCU** and install **MC97771A1 BCU** (bank control unit). Verify the **BCU FAIL** indicator lights then goes off. If not, replace **BCU**. | |
| 6. Install **AUB27 ADU** (alarm display unit). | DLP-506 |

| DO ITEMS BELOW IN ORDER LISTED | FOR DETAILS, GO TO |
|---|---|

7.

**CAUTION:**
*This will cause service outage (major, near end, and digroups AB alarms) for about 60 seconds while the **TRU** is being replaced.*

After waiting 15 minutes for the provisioning data to clear (after the RT ADU and BCU have been installed), quickly replace **TRU** in shelf group **AB** with an **AUA109** or **AUA105 TRU**. Verify the **TRU FAIL** indicator lights then goes off, and the digroups AB alarms clear. If not, replace **TRU**.

8.

**CAUTION:**
*This will cause service outage (major, near end, and digroups CD alarms) for about 60 seconds while the **TRU** is being replaced.*

Quickly replace **TRU** in shelf group **CD** with an **AUA109** or **AUA105 TRU**. Verify the **TRU FAIL** indicator lights then goes off, and the digroups CD alarms clear. If not, replace **TRU**.

| | | |
|---|---|---|
| 9. | Install **CTU** (channel test unit). | DLP-503 |
| 10. | If required, Install **DTU** (digital test unit). | DLP-504 |

11. Update office records.

# Convert Series 5 RT from Feature Package B Mode 2 to Feature Package B Mode 1

| DO ITEMS BELOW IN ORDER LISTED | FOR DETAILS, GO TO |
|---|---|
| 1. This procedure assumes the following:<br>• That new digital line installation is completed for the B and D digroups.<br>• That preservice tests have been completed and the digital facility is operating properly. (AT&T 363-200-100 TOP contains digital line preservice tests.)<br>• That proper connections have been made to the digital facility at both the RT and central office. | |
| 2. Establish communication with central office personnel. | |
| 3. Set **LIU** options (any version LIU can be used), with **Z** line coding, on two LIU circuit packs but do not install the LIUs. | DLP-507 |
| 4. **NOTE:** When an LIU is installed in the B or D LIU slot of an FPB Mode 2 RT, the **FAIL** indicator will light because the RT is configured for Mode 2 operation and these LIU slots should not be equipped. If the LIU is functioning properly, the **FAIL** indicator will go off while the ADU **LED TEST** button is pressed.<br><br>Install LIU in **LIU B** slot and verify the **FAIL** indicator lights. Then press and hold the ADU **LED TEST** button and verify the LIU **FAIL** indicator goes off. If either of the above indications do not happen, replace LIU. | |
| 5. Install LIU in **LIU D** slot and verify the **FAIL** indicator lights. Then press and hold the ADU **LED TEST** button and verify the LIU **FAIL** indicator goes off. If either of the above indications do not happen, replace LIU. | |

| DO ITEMS BELOW IN ORDER LISTED | FOR DETAILS, GO TO |
|---|---|
| 6. When requested by central office personnel, set ADU options for Mode 1 application: | |
| A. On **AUB27** (with special service capability). | DLP-506 |
| B. On **AUB24** (no special services). | DLP-508 |
| 7. Perform end-to-end Mode 2 to Mode 1 conversion test. | DLP-509 |
| 8. Update office records. | |

# Convert Series 5 RT from Feature Package B Mode 1 to Feature Package B Mode 2

| DO ITEMS BELOW IN ORDER LISTED | FOR DETAILS, GO TO |
|---|---|
| 1. If **AUA6( )D** type LIUs are installed in the RT, proceed to Step **3**. | |
| 2. Change LIUs in LIU slot A, C, and P (if protection is used), one at a time, to **AUA6( )D** version LIUs. | DLP-505 |
| 3. If **AUA105** type TRUs are installed in the RT, proceed to Step **6**. | |
| 4. **CAUTION:** *This will cause service outage (major, near end, and digroups AB alarms) for about 60 seconds while the **TRU** is being replaced.* <br><br> Quickly replace **TRU** in shelf group **AB** with an **AUA105 TRU**. Verify the **TRU FAIL** indicator lights then goes off, and the digroups AB alarms clear. If not, replace **TRU**. | |
| 5. **CAUTION:** *This will cause service outage (major, near end, and digroups CD alarms) for about 60 seconds while the **TRU** is being replaced.* <br><br> Quickly replace **TRU** in shelf group **CD** with an **AUA109** or **AUA105 TRU**. Verify the **TRU FAIL** indicator lights then goes off, and the digroups CD alarms clear. If not, replace **TRU**. | |

| DO ITEMS BELOW IN ORDER LISTED | FOR DETAILS, GO TO |
|---|---|
| 6. Establish communication with central office personnel. | |
| 7. Move any special service channel units (including coin) to last four channel unit slots in each digroup. | |
| 8. **CAUTION:** *The following Steps will cause service interruption while the system is being converted to Mode 2.* When requested by central office personnel, remove LIUs installed in LIU slots B and D. | |
| 9. When requested by central office personnel, set ADU options for Mode 2 application: | |
| A. On **AUB27** (with special service capability). | DLP-506 |
| B. On **AUB24** (no special services). | DLP-508 |
| 10. Perform end-to-end Mode 1 to Mode 2 conversion test. | DLP-510 |
| 11. Update office records. | |

# Add Special Service Capability to Feature Package B RT

| DO ITEMS BELOW IN ORDER LISTED | FOR DETAILS, GO TO |
|---|---|

**CAUTION:**
*Removing the ADU or BCU for a FPB Mode 1 system will interrupt service on Digroup A. Set the AUA27 options correctly before removing the AUA24 ADU. When replacing either the ADU or BCU, choose a time when there is little or no service on Digroup A and quickly replace the ADU/BCU to minimize service interruption.*

Comment: Removing the ADU or BCU in a FPB Mode 2 system does not interrupt service.

| | | |
|---|---|---|
| 1. | If required, replace **MC97724A1 BCU** with **MC97771A1** or **MC97776A1 BCU**. Verify the **BCU FAIL** indicator does not remain on. If not, replace BCU. | |
| 2. | Replace **AUB24 ADU** with **AUB27 ADU**. | DLP-506 |
| 3. | Update office records. | |

# Add or Remove Protection Line Option

| DO ITEMS BELOW IN ORDER LISTED | FOR DETAILS, GO TO |
|---|---|

**SUMMARY:** The protection line is removed by removing the LSU and LIU-P and setting the ADU protection line option (mini switch position 1 on S1 or S2) for no protection. An LFU may be required if interfacing with a DDM-1000 or DDM-2000 multiplexer. The protection line is added by setting the ADU for the protection line (mini switch position 1 on S1 or S2), optioning and installing the LSU and LIU-P LIU. When changing the protection line equipage, both the RT and the CO equipment must be changed.

1. **CAUTION:**
   *When changing ADU protection equipage option, changing any other mini switch position will cause service interruption. Removing the ADU will interrupt service on digroup A if the system is equipped for FPB Mode 1.*

   **NOTE:**
   Changing protection line equipage option will cause an MN alarm until changes at both ends are complete.

   Remove the **ADU** and change mini switch position 1 on **S1** (AUB26 or AUB27) or **S2** (AUB22 or AUB24). Reinstall **ADU**.

2. If adding protection line proceed to Step **5**. If removing protection line continue with Step **3**.

3. Remove **LSU** and **LIU** in **LIU-P** slot. Alarms will clear when both ends make the changes.

4. If required, install **LFU**. Proceed to Step **8**.

| DO ITEMS BELOW IN ORDER LISTED | FOR DETAILS, GO TO |
|---|---|
| 5. **CAUTION:** *The AUA73 LSU has a 32/64 option that must be set to 64 except for FPD applications.* | |
| Install **LSU**. | DLP-511 |
| 6. **NOTE:** The LIU will have a CLF alarm and the ADU will have an MN alarm until both ends are equipped for protection. | |
| Option and install **LIU** in **LIU-P** slot. | DLP-507 |
| 7. Exercise protection switching (**LSU f** mini switch **on** then **off**) for each digroup. Replace **LSU** if any digroup will not switch. | |
| 8. Update office records. | |

# Convert Series 5 RT to Any Feature Package Capability Generic Procedures

**DO ITEMS BELOW IN ORDER LISTED** **FOR DETAILS, GO TO**

**Summary:** This procedure interrupts service for the system. The basic philosophy is to remove all common units and turn up the system with the common units required for the new system configuration. The turn up procedures are found in the RT Turn Up TAB section in NTP-003. When doing this procedure, note that some units may already be installed (PCUs, FCU, fuse units); and once this procedure is completed the ADU should be optioned for In-Service when the central office end is ready. To avoid end-to-end incompatibility trouble, both ends of the system must be converted at the same time.

**NOTE:**
The older version RT channel bank assemblies (for example J1C182AB) do not support all feature packages. Refer to NTP-002 to verify that the RT channel bank assembly you have can be converted to the new feature package configuration.

1.

**CAUTION:**
*An electrostatic discharge wrist strap with a minimum resistance of 250K Ohms should be worn when handling Series 5 circuit packs to prevent possible damage to the circuit packs. Before using the wrist strap, check it for opens, shorts, and minimum resistance value. If the strap does not pass these checks it should not be used. To avoid possible personal injury while using the wrist strap, do not connect it to the power shelf or adjacent portions of the RT frame. Connect the wrist strap to ESD GRD jack on the fan unit, if present. If grounding jack is not present, connect wrist strap to bare-metal section of the frame well away from the power shelf.*

| DO ITEMS BELOW IN ORDER LISTED | FOR DETAILS, GO TO |
|---|---|

**NOTE:**
If any of the circuit packs listed below have already been installed in the RT bank, it is not necessary to have these circuit packs available.

| | |
|---|---|
| Verify that the required version circuit packs are available. | DLP-500 |

2.

**CAUTION:**
*Service interruptions will occur on a working system when the following steps are performed. Coordination with central office personnel is required to minimize service interruption.*

Remove the following circuit packs, in the order listed, from the RT system being converted:

- **ADU** (note option switch settings)
- **BCU**
- **CTU**
- **TRU-AB**
- **TRU-CD**
- **LIU-A**
- **LIU-B** or **TCU-B** (in LIU-B slot if required).
- **LIU-C**
- **LIU-D** or **TCU-D** (in LIU-D slot if required).
- **LIU-P**
- **LSU**.

| DO ITEMS BELOW IN ORDER LISTED | FOR DETAILS, GO TO |
|---|---|

3.

**NOTE:**
The RT turn up procedures assume that no common units have been installed. For conversion purposes, some common units may already be installed (PCUs, FCU, and CFU). You need only be concerned with optioning and installing the common units removed in the previous Step. The LFU unit may need to be installed if the new system configuration uses a DDM-1000 or DDM-2000 multiplexer.

Perform **NTP-003** procedures found in the **RT Turn Up** Tab Section. After CO end conversion has been completed, install in service option in **ADU** (mini switch positions **3** and **4** on **S1** or **S2**) for bank being converted. Use 363-205-402 Channel Unit Installation TOP to provision any special services channel units as required.

4. Update office records.

# Convert Feature Package B Mode 1 or Mode 2 to Feature Package 303

**DO ITEMS BELOW IN ORDER LISTED** **FOR DETAILS, GO TO**

**SUMMARY:** Use this procedure to convert feature package B (FPB) [with AUB27 alarm display unit (ADU)] Mode 1 or Mode 2 to feature package 303 (FP303). The A and C line interface unit (LIU) DS1 facilities carry the active and standby embedded operations channel (EOC) and timeslot management channel (TMC) in a FP303 system; therefore, the minimum system must include both of these facilities.

**CAUTION:**
*FP303 does not support non-switched and non-locally switched special services; therefore, these services must be moved to another system before starting this procedure.*

This conversion requires coordination between the RT craft and the *5ESS* IDCU personnel. The RT craftsperson follows this procedure while the switch person follows 235-105-210, Procedure 9.91.

1.

**CAUTION:**
*An electrostatic discharge wrist strap with a minimum resistance of 250K Ohms should be worn when handling Series 5 circuit packs to prevent possible damage to the circuit packs. Before using the wrist strap, check it for opens, shorts, and minimum resistance value. If the strap does not pass these checks it should not be used. To avoid possible personal injury while using the wrist strap, do not connect it to the power shelf or adjacent portions of the RT frame. Connect the wrist strap to ESD GRD jack on the fan unit, if present. If grounding jack is not present, connect wrist strap to bare-metal section of the frame well away from the power shelf.*

## DO ITEMS BELOW IN ORDER LISTED — FOR DETAILS, GO TO

Verify that the following is available.

- One **MC97777A1** bank control unit (**BCU**)
- Two **AUA112** transmit/receive units (**TRU**s)
- One **993A TRU** faceplate cable
- One **AUA74** line switch unit (**LSU**), if protection switching is desired
- One C- or D-series line interface unit (**LIU**) for each DS1 (including the protection DS1) being equipped, may already be present in FPB system.

---

2.

**CAUTION:**
*During recent change and verify activities the switch personnel must assign IFACs to RT TERM numbers that correspond to physical DS1 location (LIUs) in the RT. RT TERM 1 corresponds to LIU-A, RT TERM 2 corresponds to LIU-B, RT TERM 3 corresponds to LIU-C, RT TERM 4 corresponds to LIU-D, and RT TERM 5 corresponds to LIU-P. Since the LIU-C DS1 facility carries the backup EOC/TMC, the EOC/TMC BKUP RT TERM recent change field must be set to 3.*

Establish communication with *5ESS* IDCU personnel.

---

3.

**CAUTION:**
*Prior to doing recent change and verify activities to update the RT data to TR-303, the switch personnel removes the IFACs from service. This results in a service interruption that last till the switch personnel restores the IFACs to service and provisions the RT.*

Wait for the switch personnel to remove from service the IFACs associated with the RT before continuing.

| DO ITEMS BELOW IN ORDER LISTED | FOR DETAILS, GO TO |
|---|---|
| 4. Remove the following circuit packs from the RT system being converted:<br>• **ADU**<br>• **BCU**<br>• **TRUs**<br>• **LIU**s<br>• **LSU**. | |
| 5. Set option switches for preservice and unequipped. Install the alarm display unit (**ADU**) and disregard all alarms. | DLP-512 |
| 6. Install the bank control unit (**BCU**). | DLP-513 |

7. Remove the **ADU**. Change switch S1-5 and S1-6 to **ABE** and **CDE**. If also equipping the B DS1, change S2-7 to the left (not labeled). If also equipping the D DS1, change S2-8 to the left (not labeled).

   Set the **NORM/CLEAR** option plug for **NORM**. Reinstall the **ADU**.

   ⚠ **CAUTION:**
   *If the **NORM/CLEAR** option plug is left in the **CLEAR** position, administrative memory clears each time the bank resets. This memory clearing results in a temporary service interruption.*

   If a channel test unit (**CTU**) or digital test unit (**DTU**) is already installed in the dual bank assembly, within 75 seconds, only the **MJ** and **NE** LEDs on the **ADU** and the **DIGROUP** LEDs on the **BCU** stay lighted.

   Otherwise, within 75 seconds, only the **FAIL**, **MN**, and **NE** LEDs on the **ADU** stay lighted.

| DO ITEMS BELOW IN ORDER LISTED | FOR DETAILS, GO TO |
|---|---|
| 8. Install an **AUA112** transmit/receive unit (**TRU**) in AB shelf. Verify that the **TRU FAIL** LED lights and goes off. If not, do **TAP-100** before continuing.<br><br>In about 25 seconds, only the **MJ** and **NE** on the **ADU** and **DIGROUP** LEDs on the **BCU** stay lighted.<br><br>Since a minimum system configuration requires equipping both the A and C DS1 facilities, the **A** and **C DIGROUP** LEDs will be lighted. The **D DIGROUP** LED will also light whether or not it is being equipped. The **B** will only light if the **B DIGROUP** DS1 facility is being equipped. | |
| 9. Install an **AUA112** transmit/receive unit (**TRU**) in CD shelf. Verify that the **TRU FAIL** LED lights and goes off. If not, do **TAP-100** before continuing.<br><br>Only the **MJ**, **NE**, and **CMP** on the **ADU** and the **DIGROUP** LEDs on the **BCU** stay lighted.<br><br>Since a minimum system configuration requires equipping both the A and C DS1 facilities, the **A** and **C DIGROUP** LEDs will be lighted. The **D DIGROUP** LED will also light whether or not it is being equipped. The **B** will only light if the **B DIGROUP** DS1 facility is being equipped. | |
| 10. Install the **993A TRU** cable between the faceplate connectors on the **TRUs**. The **CMP** LED on the **ADU** clears in about 30 seconds.<br><br>If the **LIU D** DS1 facility is not being equipped, the **D DIGROUP** LED goes off at this point. | |

| DO ITEMS BELOW IN ORDER LISTED | FOR DETAILS, GO TO |
|---|---|
| 11. **NOTE:** All line interface units (**LIU**s) in the same system should have identical option switch settings.<br><br>Set options and install a C- or D-type **LIU** in the facility shelf for each DS1 being equipped. Wait for the **FAIL** LED on the **LIU** to light and go off before installing the next **LIU**. If the **FAIL** LED fails to light and go off, do **TAP-100** before continuing.<br><br>Within 30 seconds, the **DIGROUP** LED on the **BCU** for the **LIU** just installed goes off. After the last digroup LIU is installed in a system optioned for protection switching, only the **MN** and **NE** LEDs on the ADU remain lighted. In systems not optioned for protection switching, all alarms clear. | DLP-514 |
| 12. If protection switching is desired, install **AUA74 LSU** (line switch unit) in facility shelf. Otherwise, proceed to Step 14 | DLP-516 |
| 13. **NOTE:** All line interface units (**LIU**s) in the same system should have identical option switch settings.<br><br>Set options and install a C- or D-type **LIU** in the LIU-P slot in the facility shelf. The **FAIL** LED on the **LIU** should light momentarily and go off. If the **FAIL** LED fails to light and go off, do **TAP-100** before continuing.<br><br>Within 30 seconds, the **MN** and **NE** LED on the **ADU** goes off. | DLP-514 |
| 14. **NOTE:** The **CTU** is used with the pair gain test controller (PGTC) to enable remote testing of channel units and subscriber lines beyond the remote terminal.<br><br>If required and not previously installed, install the **CTU**. Verify that the **FAIL** LED on the **CTU** lights and goes off and **BUSY** LED is off. If not, check fuses on the **CFU** then do **TAP-100** before continuing. | |

| DO ITEMS BELOW IN ORDER LISTED | FOR DETAILS, GO TO |
|---|---|
| 15. Perform RT LED test. | DLP-515 |
| 16. Remove the ADU and set switches S1-3 and S1-4 to ABI and CDI. Reinstall the ADU.<br><br>The **MJ** and **FE** LEDs on the **ADU** and **DIGROUP** LEDs on the **BCU** light. | |
| 17. Wait for the switch personnel to restore to service the IFACs associated with the RT.<br><br>As each IFAC is restored to service, the **DIGROUP** LED on the **BCU** associated with the IFAC goes off. After all the **DIGROUP** LEDs go off, a **MN** and **FE** remains lighted until the protection IFAC is restored. | |
| 18. Wait for the switch personnel at the MCC to provision the RT.<br><br>Response: Wait for the MCC to display **EXC RT PROV TYPE=ALL SID=g LRT= d e f COMPLETED - NO TASKS PENDING** (where g=Site ID number, d=SM number, e=IDCU number, and f=FP303 RT number) before continuing. Provisioning can take up to 15 minutes depending on the switch activity level. | |
| 19.<br><br>**NOTE:**<br>The next three steps verify correct end-to-end operation.<br><br>Test alarm system for power minor and fan alarms. | DLP-517 |
| 20. Test alarm system for miscellaneous alarms. | DLP-518 |
| 21. Perform channel tests. | DLP-519 |
| 22. Update office records. | |

# Reinstate Feature Package B Following a Failed Conversion to Feature Package 303

| DO ITEMS BELOW IN ORDER LISTED | FOR DETAILS, GO TO |
|---|---|

**SUMMARY:** Use this procedure to convert back to feature package B (FPB) Mode 1 or Mode 2 following a failed conversion to feature package 303 (FP303).

This procedure requires coordination between the RT craft and the *5ESS* IDCU personnel. The RT craftsperson follows this procedure while the switch person follows the backout procedure in 235-105-210, Procedure 9.91.

1. Establish communication with *5ESS* IDCU personnel.

2. Wait for the switch personnel to remove from service the IFACs associated with the RT before continuing.

3. **CAUTION:**
*An electrostatic discharge wrist strap with a minimum resistance of 250K Ohms should be worn when handling Series 5 circuit packs to prevent possible damage to the circuit packs. Before using the wrist strap, check it for opens, shorts, and minimum resistance value. If the strap does not pass these checks it should not be used. To avoid possible personal injury while using the wrist strap, do not connect it to the power shelf or adjacent portions of the RT frame. Connect the wrist strap to ESD GRD jack on the fan unit, if present. If grounding jack is not present, connect wrist strap to bare-metal section of the frame well away from the power shelf.*

| DO ITEMS BELOW IN ORDER LISTED | FOR DETAILS, GO TO |
|---|---|
| Remove the following circuit packs from the RT system being converted:<br>• Alarm display unit (**ADU**)<br>• Bank control unit (**BCU**)<br>• Transmit/receive unit (**TRUs**)<br>• Line switch unit (**LSU**). | |
| 4. Set option switches on the **AUB27( ) ADU** for preservice and unequipped. Install the **ADU** and disregard all alarms. | DLP-520 |
| 5. Install the **FPB BCU** removed during the conversion to FP303.<br><br>Within 30 seconds, all indicators go off. If the **PRV** LED on the **ADU** remains lighted, wait for the **PRV** LED to go off before continuing. | |
| 6. Remove the **ADU**. If equipping the AB shelf change switch S1-5 to **ABE**; if equipping the CD shelf change switch S1-6 to **CDE**.<br><br>Set the **NORM/CLEAR** option plug for **NORM**. Reinstall the **ADU**.<br><br>Within 30 seconds, only the **MJ** and **NE** LEDs on the **ADU** and the **DIGROUP** LEDs (for those DS1s being equipped) on the **BCU** stay lighted. | |
| 7. Install an **AUA105** or **AUA109** transmit/receive unit (**TRU**) in AB shelf. Verify that the **TRU FAIL** LED lights and goes off.<br><br>In about 25 seconds, one of the following happens:<br>• If equipping only the AB shelf with no protection switching, all alarms clear.<br>• If equipping only the AB shelf with protection switching, only the **MN** and **NE** LED on the **ADU** stay lighted.<br>• If equipping both the AB and CD shelves with or without protection switching, only the **MJ** and **NE** on the **ADU** and the **DIGROUP C** and **D** LEDs on the **BCU** stay lighted. | |

| DO ITEMS BELOW IN ORDER LISTED | FOR DETAILS, GO TO |
|---|---|
| 8. If equipping the CD shelf, install an **AUA105** or **AUA109** transmit/receive unit (**TRU**) in CD shelf. Verify that the **TRU FAIL** LED lights and goes off.<br><br>In about 25 seconds if the system is not optioned for protection switching, all alarms clear. Otherwise, only the **MN** and **NE** LEDs on the **ADU** remain lighted. | |
| 9. If the FPB system had protection switching, install **AUA73( ) LSU** removed in converting to FP303.<br><br>In about 10 seconds, all alarms clear. | |
| 10. Perform RT LED test. | DLP-515 |
| 11. Remove the ADU and if equipping the AB shelf, set switch S1-3 to ABI. If equipping the CD shelf set switch S1-4 to CDI. Reinstall the ADU.<br><br>The **MJ** LED on the **ADU**, **DIGROUP** LEDs (for those DS1s equipped) on the **BCU**, and **CLF** LEDs on the **LIU**s light. | |
| 12. Wait for the switch personnel to restore to service the IFACs associated with the FPB RT.<br><br>As each digroup IFACs is restored to service, the **DIGROUP** LED on the **BCU** and the **CLF** on the **LIU** associated with the IFACs go off. An **MN** and **FE** on the **ADU** and a **CLF** on the **LIU-P** remains lighted until the protection IFACs is restored. | |
| 13. Have the switch personnel verify that the IFACs are provisioned for **B8ZS** line coding (the current **LIU** line code setting). | |
| 14.<br><br>**NOTE:**<br>This step verifies correct end-to-end operation.<br><br>Perform channel tests. | DLP-519 |
| 15. Update office records. | |

# Clear FAIL LED Problems on a Unit During Turnup and Conversion

Use this procedure when on installing a unit, the unit's **FAIL** LED remains lighted or fails to light momentarily and go off. This procedure assumes there are no blown fuses on the **BFU**, **CFU**, or **LFU** fuse units and each **PCU** voltage (-42 to -56 V DC) is present.

1. Press and hold **LED TEST** button on the **ADU**.

2. Do the LEDs on the common units light?

   If **YES**, proceed to Step **12**.
   If **NO**, continue with Step **3**.

3. Replace the bank control unit (**BCU**).

4. Press and hold **LED TEST** button on the **ADU**.

5. Do the LEDs on the common units light?

   If **YES**, proceed to Step **12**.
   If **NO**, continue with Step **6**.

6. Replace the **BCU** with the **BCU** removed previously.

7. Replace the alarm display unit (**ADU**).

8. Press and hold **LED TEST** button on the **ADU**.

9. Do the LEDs on the common units light?

   If **YES**, proceed to Step **12**.
   If **NO**, continue with Step **10**.

10. Replace the **ADU** with the **ADU** removed previously.

11. Check the wiring using SD-7C117-01, SD-7C117-02, or SD-7C117-03. After locating and correcting the wiring trouble, go back to the NTP and reinstall the unit with the **FAIL** LED problem.

12. Is the **FAIL** LED on the suspect unit lighted?

    If **YES**, continue with Step **13**.
    If **NO**, proceed to Step **14**.

13. With the **LED TEST** button held, does the **FAIL** LED on the suspect unit go off?

    If **YES**, proceed to Step **24**.
    If **NO**, continue with Step **14**.

14. Replace the suspect unit with another unit of the same type.

15. Did the **FAIL** LED on the suspect unit light momentarily and then go off?

    If **YES**, **STOP. YOU HAVE COMPLETED THIS PROCEDURE.**
    If **NO**, continue with Step **16**.

16. Replace the unit with the unit removed previously.

17. Replace the **BCU**.

18. Did the **FAIL** LED on the suspect unit go off?

    If **YES**, **STOP. YOU HAVE COMPLETED THIS PROCEDURE.**
    If **NO,** continue with Step **19**.

19. Replace the **BCU** with the **BCU** removed previously.

20. Replace the **ADU**.

21. Did the **FAIL** LED on the suspect unit go off?

    If **YES**, **STOP. YOU HAVE COMPLETED THIS PROCEDURE.**
    If **NO**, continue with Step **22**.

22. Replace the **ADU** with the **ADU** removed previously.

23. Check the wiring using SD-7C117-01, SD-7C117-02, or SD-7C117-03. After locating and correcting the wiring trouble, go back to the NTP and reinstall the unit with the FAIL LED problem.

24. Release the **LED TEST** button. Is the **CMP** LED on the **ADU** lighted?

    If **YES**, continue with Step **25**.
    If **NO**, proceed to Step **26**.

25. There is either a common unit or option switch incompatibility within the system. Either replace the incompatible unit with a compatible unit, or correct the option switch setting on the ADU or suspect unit itself.

    Reference: **DLP-512 (ADU), DLP-514 (LIU), DLP-521 (CU Compatibility)**

26. After correcting the incompatibility problem, did the **FAIL** LED on the suspect unit go off?

    If **YES**, **STOP. YOU HAVE COMPLETED THIS PROCEDURE.**
    If **NO**, continue with Step **27**.

27. Check the wiring using SD-7C117-01, SD-7C117-02, or SD-7C117-03. After locating and correcting the wiring trouble, go back to the NTP and reinstall the unit with the **FAIL** LED problem. If this fails to fix the **FAIL** LED problem, consult the Lucent Technologies Regional Technical Assistance Center (RTAC) by calling 1-800-225-RTAC or the local technical support group.

# Verify that Correct Complement of Circuit Packs is Available

1. Refer to Table A to determine the number of circuit packs required for the shelves or banks to be equipped.

2. Refer to Table B to determine the circuit pack codes required for the Feature Package application to be equipped.

   Comment: The version of common units required is determined by the ADU and BCU circuit packs used and feature package configuration.

3. Are all required circuit packs available?

   If **YES,** then **STOP. YOU HAVE COMPLETED THIS PROCEDURE.**
   If **NO,** then continue with Step **4.**

4. Obtain missing circuit packs through appropriate channels.

   **STOP. YOU HAVE COMPLETED THIS PROCEDURE.**

**Table A**
**SLC® Series 5 Carrier System RT Circuit Packs**

| Location | Circuit Pack | Quantity for Shelf Being Equipped in a One Dual Bank Assembly | | | |
|---|---|---|---|---|---|
| | | All Shelves | A-B Blue | C-D Blue OR White | A-B White |
| **Dual Bank Assembly** | PCU (AUA11,AUA11B,AUA11C) | 5 | 2 | 1 | 1 |
| | FCU (AUA24) | 2 | 1 | — | 1 |
| | CFU (AUA114, 39E) | 2 | 1 | — | 1 |
| | LFU (AUA115 ,39F) * | 1 | 1 | — | — |
| | LIU (See Table B) † | 10 | 3 | 2 | 3 |
| | TRU (See Table B) | 4 | 1 | 1 | 1 |
| | ADU (See Table B) | 2 | 1 | — | 1 |
| | BCU (See Table B) | 2 | 1 | — | 1 |
| | CTU (See Table B) | 1 | 1 | — | — |
| | DTU (See Table B) ‡ | 2 | 1 | — | 1 |
| | LSU (See Table B) § | 2 | 1 | — | 1 |
| | TCU (See Table B) ¶ | 4 | 1 | 1 | 1 |
| **J1C182BA Power Shelf** | LDU (ED7C613-30) | 1 | 1 | — | — |
| | 336A or 336A1 Rectifier ** | 2 | 2 | — | — |
| | 337A or 337A1 BAT. CHG. ** | †† | †† | †† | †† |
| | 3C or 3C1 RNG. GEN. ††† | 2 | 2 | — | — |
| | BFU (AUG11, 40D) | 1 | 1 | — | — |
| | PRU (AUG1) ‡‡ | 1 | — | — | — |
| **J1C182BB Bulk Power Shelf** | 3C or 3C1 RNG. GEN. ††† | 2 | 2 | — | — |
| | BFU (AUG11, 40D) | 1 | 1 | — | — |
| | PRU (AUG1) ‡‡ | 2 | — | — | — |
| | RSU (AUG2) | 1 | — | — | — |
| **J1C182BD Bulk Power Plant** | BIU (AUG4) | 1 | — | — | — |
| | 336A1 Rectifier ‡‡‡ | 5 | — | — | — |
| | RCU (AUG3) | 1 | — | — | — |
| | 3H1 RNG. GEN §§§ | 2 | — | — | — |
| **J1C182PB-1 Optics Power Shelf** | A/FCU (AUA402) | 1 | 1 | — | — |
| | PCU (AUA11B, AUA11C) | 4 | 1 | 1 | 1 |
| | BFU (AUG11, 40D) | 2 | 2 | — | — |
| **J1C182PA-1 Optical Shelf** | OU (AYB1,AYB1B) | §§ | §§ | §§ | §§ |
| **J1C182BC Ring Shelf** | 3C or 3C1 RNG. GEN. ¶¶,††† | 2 | 2 | — | — |
| | RCU (AUG3) ¶¶ | 1 | 1 | — | — |
| **ED7C704-30 OLS Rectifier Shelf** | Pwr. Unit CS787B540 *** | 2 | 2 | — | — |

* The LFU is required when the channel bank is equipped with AUA62( ) line powering LIUs.
† The quantity of LIU units include those needed for the T1 protection line. If the T1 protection lines are not utilized, this number can be reduced by one for each channel bank. FPD and FPB Mode 2 require only one LIU for each dual digroup shelf (A-B or C-D).
‡ The DTU is required for digital testing of special services.
§ The LSU is required only if protection switching is desired.
¶ The TCU is only for FPD.
** RT frame and 80D cabinet use 4 336A rectifiers with the 337A battery chargers mounted in battery shelves.
†† One 337A battery charger is required per battery shelf.
‡‡ The PRU is required only with multiparty channel units. A second PRU is required in the J1C182BB power shelf when serving three dual bank assemblies.
§§ One OU is required for each channel unit to be installed.
¶¶ The J1C182BC ring shelf can be equipped with an additional RCU and two 3C or 3C1 ringing generators.
*** A third CS787B540 is recommended when 4 or more channel banks are equipped or 3 or more battery strings are used.
††† The 3B or 3B1 ringing generator can be used if 30 Hz ringing current is desired.
‡‡‡ The J1C182BD is normally equipped with two battery strings and five 336A1s. Three 336A1s can be used if only one battery string is used.
§§§ The 3H1 is equivalent to the 3C1 ringing generator, but has a narrower faceplate.

**Table B**
**SLC® Series 5 Carrier System RT Common Unit Compatibility**

| | System Configuration (Note) | | | | | | | | | |
|---|---|---|---|---|---|---|---|---|---|---|
| | | FPB Universal or Integrated | | | | | | | | |
| | | No Special Service | | | With Special Service | | | | | |
| **Circuit Pack** | **FPA** | **M1** | **M1** | **M2** | **SS/M1** | **SS/M2** | **FPC-AutoCut** | **FPC** | **FPD** | **FP303** |
| **BCU** | 1 BCU is required for each system (Blue and White). | | | | | | | | | |
| **MC97723A1 *** | X | | | | | | | | | |
| **MC97724A1** | | R | | | | | | | | |
| **MC97756A1** | X | | | | | | | R | R | |
| **MC97771A1** | | | X | X | X | X | X | | | |
| **MC97776A1 †** | | | X | X | X | X | X | | | |
| **MC97779A1** | | | | | | | F¶ | | | |
| **MC97796A1** | | | | | | | | | | X |
| **MC97777A1** | | | | | | | | | | X |
| **ADU** | 1 ADU is required for each system (BLUE and WHITE). | | | | | | | | | |
| **AUB21 *** | R | | | | | | | | | |
| **AUB24** | | X | X | X | | | | | | |
| **AUB26** | | | | | | | | R | R | |
| **AUB27** | | X | X | X | R | R | R,F | | | X |
| **TRU** | 1 TRU is required for each equipped dual digroup shelf. | | | | | | | | | |
| **AUA21( )** | R | | | | | | | R | R | |
| **AUA22( )** | | R | X | | X | | | | | |
| **AUA105** | | | X | R | X | R | X,F | | | |
| **AUA109** | | | X | | X | | X | | | |
| **AUA112** | | | | | | | | | | X |
| **AUA112B** | | | | | | | | | | X |
| **LIU Line Power** | 1 LIU is required for each equipped digroup LIU slot, except FPB Mode 2 or FPD were on only LIU slots A and C need LIUs. If the protection line option is used, 1 more LIU is required. | | | | | | | | | |
| **AUA62 *** | X | X | X | | X | | | X | | |
| **AUA62B *** | X | X | X | | X | | | X | X | |
| **AUA62C *** | X | X | X | | X | | X,F | X | X | |
| **AUA62D** | X | X | X | R | X | R | X,F | X | X | |
| **LIU Power Looping** | See requirement for line power type LIUs. | | | | | | | | | |
| **AUA64 *** | X | X | X | | X | | | X | | |
| **AUA64B *** | X | X | X | | X | | | X | X | |
| **AUA64C *** | X | X | X | | X | | X,F | X | X | |
| **AUA64D** | X | X | X | R | X | R | X,F | X | X | |
| **LIU DSX-1 Interface** | See requirement for line power type LIUs. | | | | | | | | | |
| **AUA61 *** | X | X | X | | X | | | X | | |
| **AUA61B *** | X | X | X | | X | | | X | X | |
| **AUA61C *** | X | X | X | | X | | X,F | X | X | |
| **AUA61D** | X | X | X | R | X | R | X,F | X | X | |
| **CTU** | 1 CTU is required for each RT channel bank assembly. | | | | | | | | | |
| **AUB22** | R | R | X | X | X | X | X | X | X | |
| **AUB25 ‡,§** | | | X | X | X | X | X | X | X | |
| **DTU** | 1 DTU (1 of each code) is required for each RT channel bank assembly that require digital testing of special services. | | | | | | | | | |
| **AUA18** | | | | | XC | XC | XC | XC | XC | |
| **AUA19** | | | | | XC | XC | XC | XC | XC | |
| **LSU** | 1 LSU is required for each system (BLUE and WHITE) if protection line option is used. | | | | | | | | | |
| **AUA13 *** | X | X | X | X | X | X | X | X | | |
| **AUA73** | X | X | X | X | X | X | X | X | R | |
| **AUA74** | | | | | | | | | | |

**Table B**
**SLC® Series 5 Carrier System RT Common Unit Compatibility**

| | System Configuration (Note) | | | | | | | | | |
|---|---|---|---|---|---|---|---|---|---|---|
| | | FPB Universal or Integrated | | | | | | | | |
| | | No Special Service | | | With Special Service | | | | | |
| **Circuit Pack** | **FPA** | **M1** | **M1** | **M2** | **SS/M1** | **SS/M2** | **FPC-AutoCut** | **FPC** | **FPD** | **FP303** |
| **TCU** | 1 TCU is required for each equipped dual digroup shelf in B or D LIU slot. | | | | | | | | | |
| **AUA71** | | | | | | | | | R | |

Note: Fiber-To-The-Home is supported by any FPB, FPC, and FPC-AutoCut system configurations with J1C182AE RT channel bank assembly. FPF *SLC*-2000 MSDT feature offers FPC-AutoCut service capabilities. (Only operates in FPC mode, not FPB Mode 1.)
X = Compatible, R = Required, C = RT CIU Access,
F = Required for FPF *SLC*®-2000 MSDT applications

* Rated Discontinued Availability,
† The MC97776A1 and the MC97771A1 BCU are functionally equivalent.
‡ The AUB25 CTU must be used when the XTC is used at the central office.
§ The AUB25 can be used in FPB only if the MC97771A1 or MC97776A1 BCU is used.
¶ Requires the MC97755A1 2 BCU and AUB6( ) ADU at the COT for FPF compatibility.

# Install AUB26 Alarm Display Unit (ADU) for FPC Conversion

1. Get one **AUB26 ADU** and inspect for possible damage.

2. Verify that fuse on **ADU** is not blown. If fuse is blown, get another **ADU** that contains good fuse.

3. On **ADU** option switch **S1** (Figure 1), use orange stick (KS-6320, L1) or equivalent to set switch positions **1** through **8** to agree with the settings of the switch positions on switch **S2** (Figure 2) of the **ADU** removed previously. Set switch position **9** to **D4**.

4. **CAUTION:**
   *Incorrectly set ADU option switches may result in immediate or future loss of service or may introduce errors into the digital bitstream.*

   Insert **ADU** into **ADU** slot.

   Response: Disregard all indicators that may be lighted.

   **STOP. YOU HAVE COMPLETED THIS PROCEDURE.**

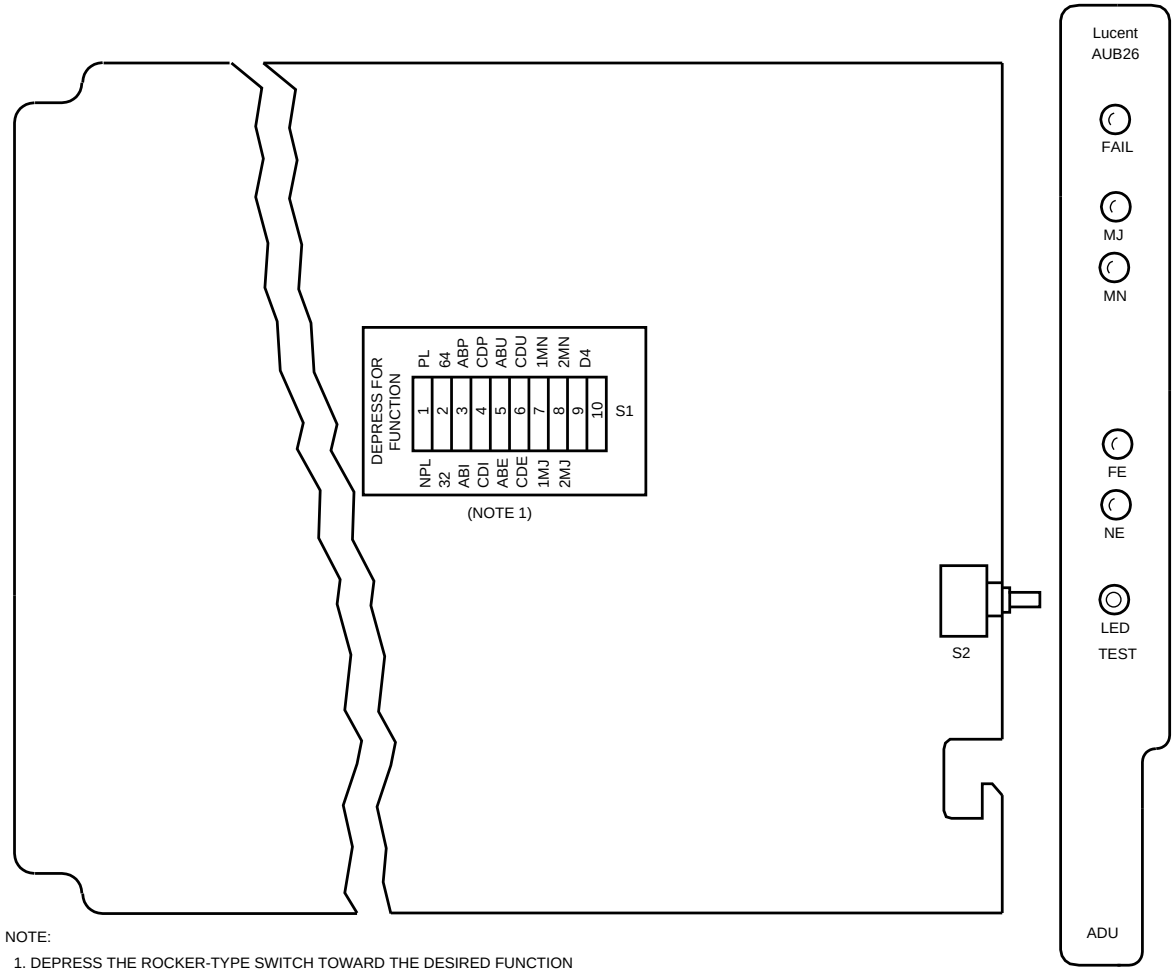


NOTE:
1. DEPRESS THE ROCKER-TYPE SWITCH TOWARD THE DESIRED FUNCTION

**Figure 1 – AUB26 RT ADU Option Switch Settings**

| SWITCH SETTINGS | | |
|---|---|---|
| CLOSED | S2 | OPEN |
| NO PROTECTION LINE | 1 | PROTECTION LINE |
| | 2 | DS1 |
| AB IN-SERVICE | 3 | AB PRE-SERVICE |
| CD IN-SERVICE | 4 | CD PRE-SERVICE |
| AB EQUIPPED | 5 | AB UNEQUIPPED |
| CD EQUIPPED | 6 | CD UNEQUIPPED |
| MJ ALM FOR RT MISC1 | 7 | MN ALM FOR RT MISC1 |
| MJ ALM FOR RT MISC2 | 8 | MN ALM FOR RT MISC2 |

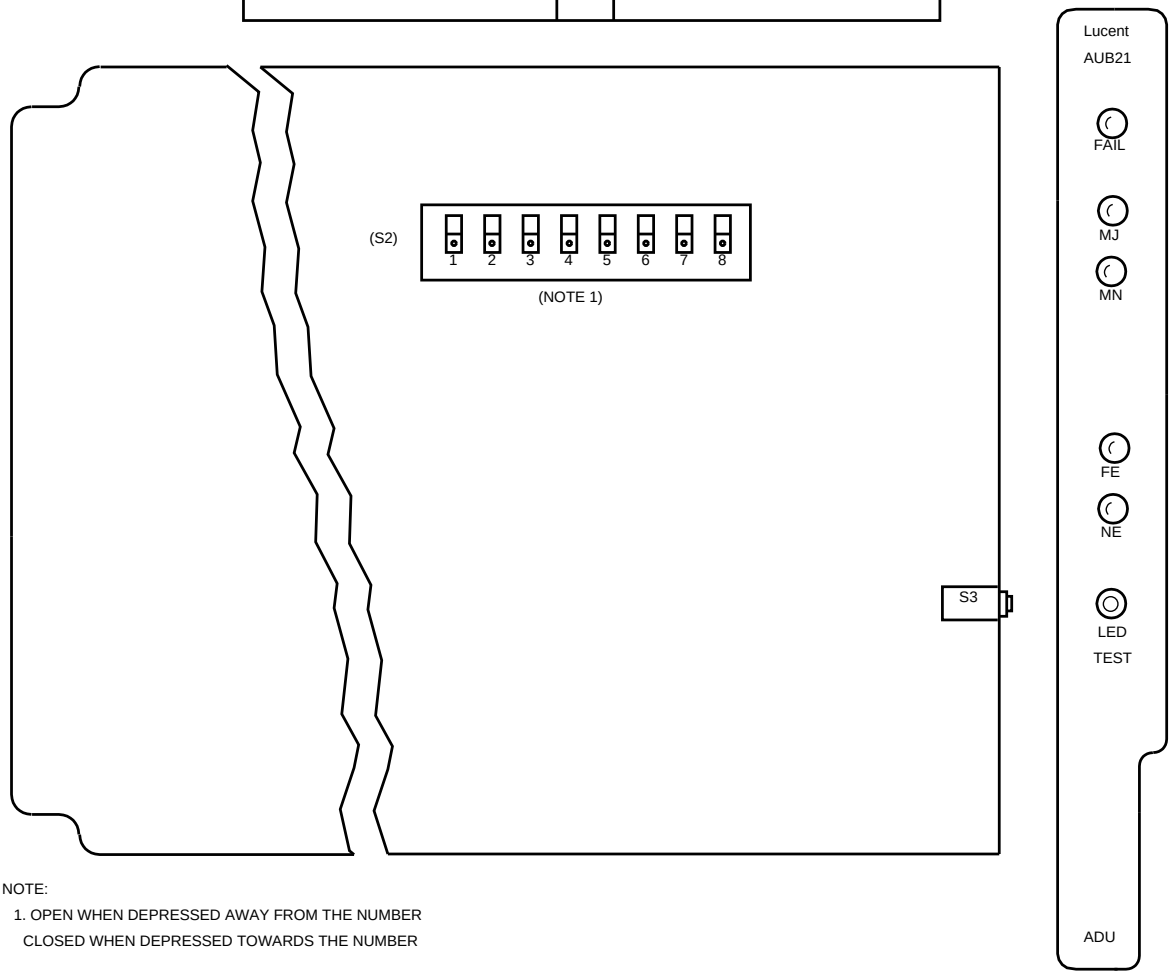


NOTE:
1. OPEN WHEN DEPRESSED AWAY FROM THE NUMBER
CLOSED WHEN DEPRESSED TOWARDS THE NUMBER

**Figure 2 – AUB21 RT ADU Option Switch Settings**

# Install Bank Control Unit (BCU) for FPC Conversion

1. Get one **MC97756A1 BCU** and inspect for possible damage.

2. Have **LIU**s been removed from channel bank being converted?

   If **YES,** then continue with Step **3.**
   If **NO,** then proceed to Step **4.**

3. 

   **NOTE:**
   **MISC1** or **MISC2** indicator on **BCU** will light if either one is connected to open door closure alarm.

   Insert **BCU** into **BCU** slot in channel bank being converted.

   Response: **BCU** and **ADU FAIL** indicators are lighted. After approximately 20 seconds, **BCU** and **ADU FAIL** indicators go off. **ADU MJ**, **NE** and **BCU DIGROUP A, B, C,** and **D** indicators are lighted.

   Proceed to Step **5.**

4. 

   **NOTE:**
   **MISC1** or **MISC2** indicator on **BCU** will light if either one is connected to open door closure alarm.

   Insert **BCU** into **BCU** slot in channel bank being converted.

   Response: **BCU** and **ADU FAIL** indicators light. After approximately 20 seconds, **BCU** and **ADU FAIL** indicators go off.

5. Does **FAIL** indicator on **BCU** and **ADU** go off after approximately 20 seconds?

   If **YES,** then **STOP. YOU HAVE COMPLETED THIS PROCEDURE.**
   If **NO,** then proceed to Step **6.**

6. Replace **BCU** with another **BCU**.

7. Does **FAIL** indicator on **BCU** and **ADU** go off after approximately 20 seconds?

   If **YES,** then **STOP. YOU HAVE COMPLETED THIS PROCEDURE.**
   If **NO,** then proceed to Step **8.**

8. Replace **BCU** with **BCU** removed previously.

9. Check wiring using SD-7C117-01 or SD-7C117-02. Repeat procedure from Step **2** after locating and correcting trouble.

# Install Channel Test Unit (CTU)

1. Get one **AUB22** (PGTC) or **AUB25** (PGTC with compatible version BCU or XTC) **CTU** and inspect for possible damage.

   Reference: **DLP-500**

2. Insert **CTU** into **CTU** slot in blue (lower) channel bank while observing indicators on **CTU** faceplate.

   Response: **CTU FAIL** indicator is lighted and **BUSY** indicator flashes.

3. Does **FAIL** indicator on **CTU** go off and remain off?

   If **YES,** then proceed to Step **9.**
   If **NO,** then continue with Step **4.**

4. Replace **CTU**.

5. While observing **FAIL** indicator on **CTU** faceplate, insert **CTU** into **CTU** slot in blue (lower) channel bank shelf.

   Response: **CTU FAIL** indicator lights momentarily.

6. Does **FAIL** indicator on **CTU** go off and remain off?

   If **YES,** then proceed to Step **9.**
   If **NO,** then continue with Step **7.**

7. Replace **CTU** with **CTU** removed previously while observing **FAIL** indicator on **CTU** faceplate.

8. Check wiring using SD-7C117-01 or SD-7C117-02. Repeat procedure from Step **3** after locating and correcting trouble.

9. Did **FAIL** indicator on **CTU** light momentarily?

   If **YES,** then **STOP. YOU HAVE COMPLETED THIS PROCEDURE.**
   If **NO,** then continue with Step **10.**

10. Replace **CTU** while observing **FAIL** indicator on **CTU** faceplate.

11. Did **FAIL** indicator on **CTU** light momentarily?

    If **YES,** then **STOP. YOU HAVE COMPLETED THIS PROCEDURE.**
    If **NO,** then continue with Step **12.**

12. ⚠ **CAUTION:**
    *Incorrectly set ADU option switches may result in immediate or future loss of service or may introduce errors into the digital bitstream.*

    Replace **ADU** with another correctly optioned **ADU**.

13. Wait 20 seconds and then replace **CTU** with **CTU** removed previously while observing **FAIL** indicator on **CTU** faceplate.

14. Did **FAIL** indicator on **CTU** light momentarily?

    If **YES,** then **STOP. YOU HAVE COMPLETED THIS PROCEDURE.**
    If **NO,** then continue with Step **15.**

15. ⚠ **CAUTION:**
    *Incorrectly set ADU option switches may result in immediate or future loss of service or may introduce errors into the digital bitstream.*

    Replace **ADU** with **ADU** removed previously.

16. Are any fuses on **CFU** in blue (lower) bank blown?

    If **YES,** then continue with Step **17.**
    If **NO,** then proceed to Step **20.**

17. Replace blown fuse(s) on **CFU**.

18. Unseat, then reseat **CTU** while observing **FAIL** indicator on **CTU** faceplate.

19. Does **FAIL** indicator on **CTU** light momentarily?

    If **YES,** then **STOP. YOU HAVE COMPLETED THIS PROCEDURE.**
    If **NO,** then continue with Step **20.**

20. Replace **CFU** in blue bank.

21. Unseat, then reseat **CTU** while observing **FAIL** indicator on **CTU** faceplate.

22. Does **FAIL** indicator on **CTU** light momentarily?

    If **YES,** then **STOP. YOU HAVE COMPLETED THIS PROCEDURE.**
    If **NO,** then continue with Step **23.**

23. Check wiring between **PCU** in facility shelf and **CFU** in blue bank and between **CFU** and **CTU** using SD-7C117-01 or SD-7C117-02. Repeat procedure from Step **11** after locating and correcting trouble.

# Install Digital Test Unit (DTU)

1.

**NOTE:**
The DTU consists of two units designated **DTU-L** (DTU-left) and **DTU-R** (DTU-right).

Get one **DTU-L** (**AUA18**) and one **DTU-R** (**AUA19**) and inspect for possible physical damage.

2. Insert **DTU-L** into left-hand side of **DTU** slot in facility shelf.

   Response: All bank indicators are off and no office alarms are active.

3. While observing **FAIL** indicator on **DTU-R** faceplate, insert **DTU-R** into right-hand side of **DTU** slot in facility shelf.

   Response: **DTU-R FAIL** indicator lights momentarily. All bank indicators are off and no office alarms are active.

4. Does **FAIL** indicator on **DTU-R** go off and remain off?

   If **YES,** then proceed to Step **9.**
   If **NO,** then continue with Step **5.**

5. Replace both **DTU-L** and **DTU-R** while observing **FAIL** indicator on **DTU-R** faceplate.

   Response: **DTU-R FAIL** indicator lights momentarily.

6. Does **FAIL** indicator on **DTU-R** go off and remain off?

   If **YES,** then proceed to Step **9.**
   If **NO,** then continue with Step **7.**

7. Replace **DTU-L** and **DTU-R** with units removed previously.

8. Check wiring using SD-7C117-01 or SD-7C117-02. Repeat procedure from Step **4** after locating and correcting trouble.

9. Did **DTU-R FAIL** indicator light momentarily?

   If **YES,** then proceed to Step **24.**
   If **NO,** then continue with Step **10.**

10. Replace both **DTU-L** and **DTU-R** while observing **FAIL** indicator on **DTU-R** faceplate.

    Response: **DTU-R FAIL** indicator lights momentarily.

11. Did **DTU-R FAIL** indicator light momentarily?

    If **YES,** then proceed to Step **24.**
    If **NO,** then continue with Step **12.**

12. **CAUTION:**
    *Incorrectly set ADU option switches may result in immediate or future loss of service or may introduce errors into the digital bitstream.*

    Replace **ADU** with another correctly optioned **ADU**.

13. Wait 20 seconds then replace **DTU-L** and **DTU-R** with units removed previously while observing **FAIL** indicator on **DTU-R** faceplate.

14. Did **FAIL** indicator on **DTU-R** light momentarily?

    If **YES,** then proceed to Step **24.**
    If **NO,** then continue with Step **15.**

15. **CAUTION:**
    *Incorrectly set ADU option switches may result in immediate or future loss of service or may introduce errors into the digital bitstream.*

    Replace **ADU** with **ADU** removed previously.

16. Are any fuses on **CFU** in blue (lower) bank blown?

    If **YES,** then continue with Step **17.**
    If **NO,** then proceed to Step **20.**

17. Replace blown fuse(s) on **CFU**.

18. While observing **FAIL** indicator on **DTU-R** faceplate, unseat then reseat **DTU-R**.

19. Does **FAIL** indicator on **DTU-R** light momentarily?

    If **YES,** then proceed to Step **24.**
    If **NO,** then continue with Step **20.**

20. Replace **CFU** in blue bank.

21. While observing **FAIL** indicator on **DTU-R** faceplate, unseat then reseat **DTU-R**.

22. Does **FAIL** indicator on **DTU-R** light momentarily?

    If **YES,** then proceed to Step **24.**
    If **NO,** then continue with Step **23.**

23. Check wiring between **PCU** in facility shelf and **CFU** in blue bank and between **CFU** and **DTU-R/DTU-L** using SD-7C117-01 or SD-7C117-02. Repeat procedure from Step **9** after locating and correcting trouble.

24. Is **BUSY** indicator on **DTU-R** lighted?

    If **YES,** then continue with Step **25.**
    If **NO,** then **STOP. YOU HAVE COMPLETED THIS PROCEDURE.**

25. Replace both **DTU-L** and **DTU-R**.

26. Is **BUSY** indicator on **DTU-R** lighted?

    If **YES,** then continue with Step **27.**
    If **NO,** then **STOP. YOU HAVE COMPLETED THIS PROCEDURE.**

27. **CAUTION:**
    *Incorrectly set ADU option switches may result in immediate or future loss of service or may introduce errors into the digital bitstream.*

    Replace **ADU** with another correctly optioned **ADU**.

28. Wait 20 seconds then replace **DTU-L** and **DTU-R** with units removed previously.

29. Is **BUSY** indicator on **DTU-R** lighted?

    If **YES,** then continue with Step **30.**
    If **NO,** then **STOP. YOU HAVE COMPLETED THIS PROCEDURE.**

30.

    ⚠ **CAUTION:**
    *Incorrectly set ADU option switches may result in immediate or future loss of service or may introduce errors into the digital bitstream.*

    Replace **ADU** with **ADU** removed previously.

31. Check wiring using SD-7C117-01 or SD-7C117-02. Repeat procedure from Step **4** after locating and correcting trouble.

# Set ZCS LIU Line Coding Option for Feature Package C-AutoCut or FPB Mode 2 Conversion

1. FPC-AutoCut requires **AUA6( )C** or **AUA6( )D** version LIUs. FPB Mode 2 requires **AUA6( )D** version LIUs. If the RT is not equipped with C or D version LIU, you must replace the older version LIUs. When replacing an older version, set the new LIU options before removing the older version LIU. Proceed to Step **3** if converting to Mode 2, otherwise continue with Step **2**.

2. Establish communication with craft personnel at COT. If a multiplexer facility is used, get appropriate documentation for the type of multiplexer facility used. If AT&T DDM-1000 multiplexer is used, see AT&T 363-206-100 and use the **set-dsx-code:** command to select *AMI* line coding at both ends of the system.

3. Are you replacing an older version LIU with an **AUA6( )C/D** LIU?

   If **YES,** then continue with Step **4.**
   If **NO,** then proceed to Step **8.**

4. Using orange stick (KS-6320, L1) or equivalent, set equalizer switches **S2** on **LIU AUA61C** or **AUA61D** (Figure 1) per work order (Table A).

**Table A**
**AUA61( )**
**LIU Equalizer Settings**

| Distance to DSX-1 | Equalizer Switch (S400/S2) Setting | | |
|---|---|---|---|
| **(Feet)** | **2** | **1** | **0** |
| 0-132 | OFF | OFF | ON |
| 133-265 | OFF | ON | OFF |
| 266-398 | OFF | ON | ON |
| 399-532 | ON | OFF | OFF |
| 533-655 | ON | OFF | ON |

5. Is **LIU** an **AUA61C** or **AUA61D**?

   If **YES,** then continue with Step **6.**
   If **NO,** then proceed to Step **7.**

6. Set loopback enable/disable switch (**S3**) to **ENB** if the RT is connected to a DDM-1000 Multiplexer. Otherwise, set it to the **DIS** position and proceed to Step **8.**

7. Using orange stick (KS-6320, L1) or equivalent, set transmit and receive pad switches on **LIU** per work order (Table B).

**Table B**
**AUA62( ) and AUA64( ) LIU Transmit/Receive Pad Setting**

| Inserted Loss | Transmit Pad (S400/S1, S2) Switch Settings | | | | Receive Pad (S100) Switch Settings | |
|---|---|---|---|---|---|---|
| **(dB)** | **1** | **2** | **3** | **4** | **1** | **2** |
| 22.5 | OFF | OFF | OFF | ON | — | — |
| 15.0 | OFF | OFF | ON | OFF | — | — |
| 7.5 | OFF | ON | OFF | OFF | OFF | ON* |
| 0 | ON | OFF | OFF | OFF | ON* | OFF |

* ON when depressed toward the numbers.

8.

**CAUTION:**
*If protection line is not available, service will be interrupted while the LIU is removed.*

If protection line is available, force digroup A to protection (switch A toward **f** on **LSU**). Remove **LIU A** and set [on **AUA6( )C/D** LIU] **B/Z** option (**S1** or **S100** Figure 1) toward **Z**.

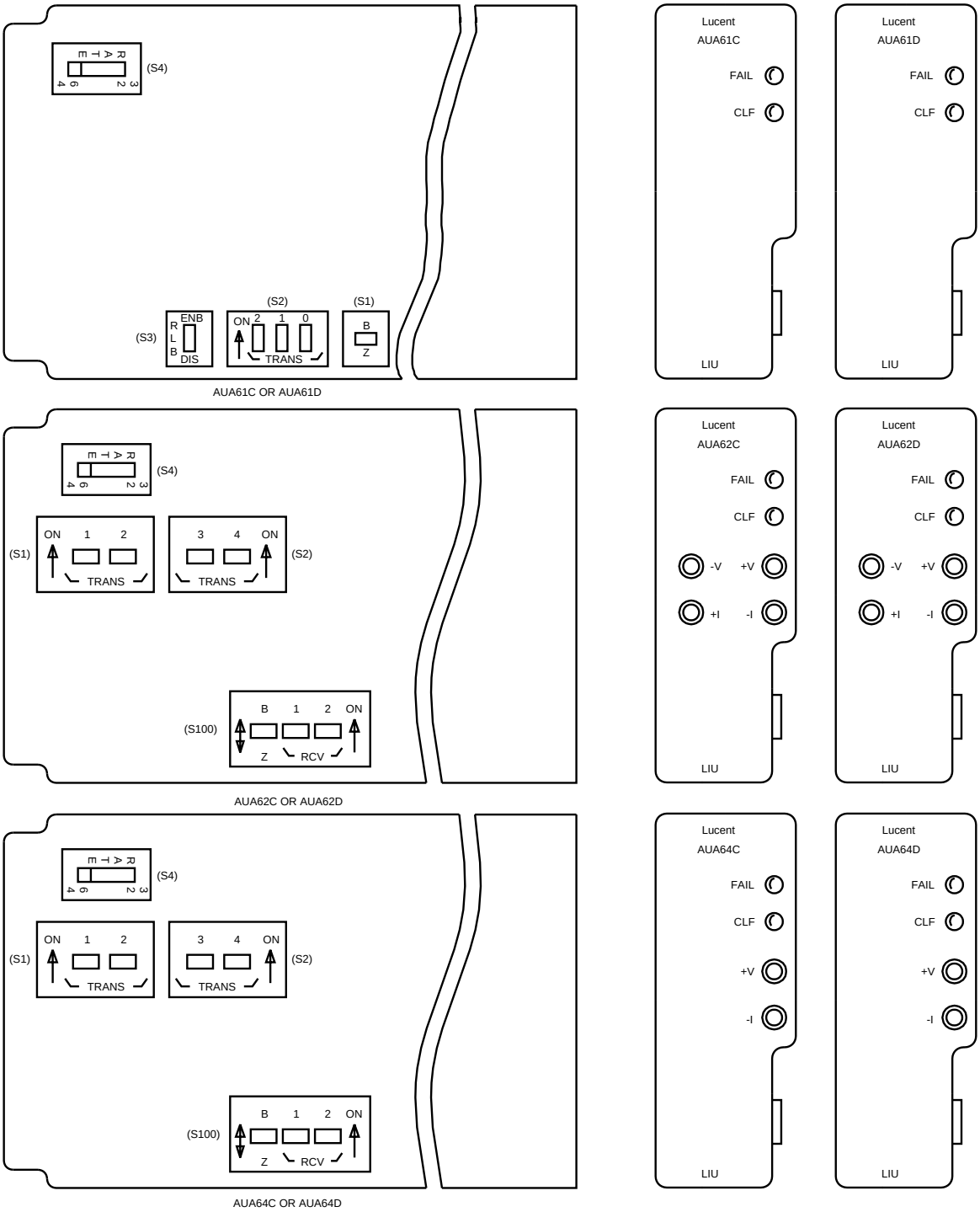


**Figure 1 – AUA61C/D, AUA62C/D, and AUA64C/D LIU Option Switches**

9. Have COT (and multiplexer facility if used) set ZSC line coding option for digroup A.

10. Install **AUA6( )C/D** in LIU A slot.

    Response: The **LIU FAIL** indicators light momentarily.

    Response: After COT (and multiplexer facility) has installed the LIU, all alarms clear.

11.

    **NOTE:**
    If digroup A was forced to protection, MN on ADU will be lighted because digroup A is on protection. But CLF on LIU A should go off.

    After COT installs LIU A (and multiplexer facility has selected ZCS line coding), do all alarms clear (**CLF** on **LIU A** off)?

    If **NO**, then continue with Step **12**.
    If **YES**, then proceed to Step **14**.

12. Verify that LIU options at both COT and RT have been set correctly. If **LIU FAIL** does not go off, replace LIU with correctly set options.

13. Replace the following circuit packs, one at a time, until trouble clears.

    - RT LIU.
    - COT LIU.
    - Multiplexer low speed interface circuit packs, if used.

14. If protection line is available, release digroup A from protection (switch A away **f** on **LSU**). Repeat Steps **3** through **13** for each equipped digroup (LIU B,C,D, and P, or C and P for Mode 2).

    **STOP. YOU HAVE COMPLETED THIS PROCEDURE.**

# Install AUB27 Alarm Display Unit (ADU) for Feature Package B Mode 1 or Mode 2, or FPC-AutoCut Conversion

1. Remove, or get one, **AUB27 ADU** (Figure 1) and inspect for possible damage.

2. Verify that fuse on **ADU** is not blown. If fuse is blown, get another **ADU** that contains a good fuse.

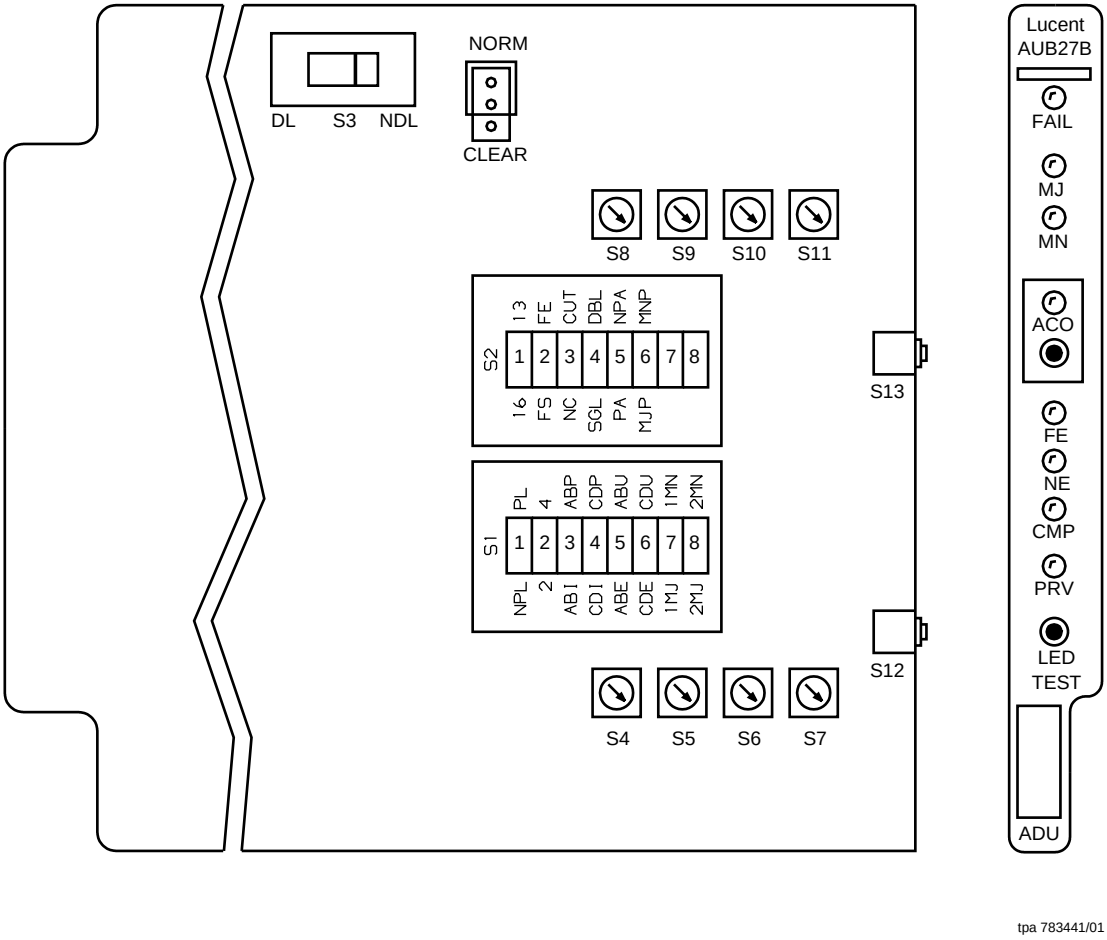


**Figure 1 – AUB27 RT ADU Option Switch Settings**

| **Table A**<br>**AUB27 Switch Setting** | | |
|---|---|---|
| **Function** | **S1 Switch Position** | **Function** |
| No Protection Line (***NPL***) | 1 | Protection Line (***PL***) |
| Mode 2 Operation (***2***) | 2 | Mode 1 or FPC Operation (***4***) (Always Use ***4*** Unless Equipping FPB Mode 2) |
| AB In-Service (***ABI***) | 3 | AB Pre-Service (***ABP***) |
| CD In-Service (***CDI***) | 4 | CD Pre-Service (***CDP***) |
| AB Equipped (***ABE***) | 5 | AB Unequipped (***ABU***) |
| CD Equipped (***CDE***) | 6 | CD Unequipped (***CDU***) |
| Major Alarm for MISC1 (***1MJ***) | 7 | Minor Alarm for MISC1 (***1MN***) |
| Major Alarm for MISC2 (***2MJ***) | 8 | Minor Alarm for MISC1 (***2MN***) |
| **Function** | **S2 Switch Position** | **Function** |
| 16 Bit Alarm Field (***16***) | 1 | 13 Bit Alarm Field (***13***) (Always Use ***13***) |
| FS Framing (***FS***) * (Use ***FS*** for FPB Mode 1 or 2) | 2 | ESF Framing (***FE***) † (Use ***FE*** for FPC-AutoCut) |
| No Cutover Hunting (***NC***) (Use ***NC*** for Mode 1 and 2 or When FPC-AutoCut is in Pre-Service) | 3 | Cutover Enabled (***CUT***) (Only Use ***CUT*** When Establishing End-to-End FPC-AutoCut System) |
| (***SGL***) | 4 | (Always Use ***DBL***) |
| (***PA***) | 5 | (Always Use ***NPA***) |
| (***MJP***) | 6 | (Always Use ***MNP***) |
| **Function** | **S3 Switch Position** | **Function** |
| Data Link (***DL***) (Always Use ***DL***) | | No Data Link (***NDL***) |
| **Function** | **Clear Norm Position** | **Function** |
| Clear Provisioning (Use ***CLEAR*** When ADU is First Installed in New System) | | Do Not Clear Provisioning (Use ***NORM*** for In-Service System) |
| **S4, S5, S6, S7** | **Rotary Switches** | **S8, S9, S10, S11** |
| System ID Number | | (Always Set to 0) |
| * Use FS option for FPB Mode 1, Mode 2, and for integrated applications.<br>† Use FE option for FPC-AutoCut and FPC applications. | | |

3. On **ADU** option switch **S1** (Figure 1 and Table A) use an orange stick (KS-6320, L1) or equivalent and set switches as follows:
   - **1** - Toward **PL** (away from number) for protection switching. Toward **NPL** (toward number) for no protection switching.
   - **2** - Toward **4**, unless FPB Mode 2 application is being equipped (toward **2**).
   - **3** - Toward **ABI** (away from number).
   - **4** - Toward **CDI** (away from number) if shelf group CD is being equipped.
   - **5** - Toward **ABE** (away from number).
   - **6** - Toward **CDE** (away from number) if shelf group CD is being equipped.
   - **7** - This position is ignored for FPB applications. For C-AutoCut or other applications, toward **MJ** if MISC1 is to report a major alarm or toward **MN** if MISC1 is to report a minor alarm.
   - **8** - This position is ignored for FPB applications. For C-AutoCut or other applications, toward **MJ** if MISC2 is to report a major alarm or toward **MN** if MISC2 is to report a minor alarm.

4. On **ADU** option switch **S2** (Figure 1), use an orange stick (KS-6320) or equivalent and set switches as follows:
   - **1 -** Toward **13**.
   - **2 -** Toward **FS** for FPB (Feature Package B Mode 1 or Mode 2) applications. Toward **FE** for Feature Package C-AutoCut or other applications.
   - **3 -**Toward **CUT** for Feature Package C-AutoCut applications. Toward **NC** for FPB or other applications.
   - FPB Mode 2 must be set to NC for **ADU FAIL, MN, NE,** and **CMP** alarms to clear.
   - **4 -** Toward **DBL**.
   - **5 -** Toward **NPA**.
   - **6 -** Toward **MNP**.
   - **7 and 8 -** Unused.

5. Set switch **S3** toward **DL**.

6. Set system identification rotary switches **S4** (most significant digit) through **S7** (least significant digit) to bank ID number.

7. Set rotary switches **S8** through **S11** to **0**.

8.

**NOTE:**
The **NORM/CLEAR** switch option is used to automatically clear random channel provisioning data stored in the **ADU** and **BCU** when the **BCU** is installed by selecting **CLEAR**. After the **BCU** has been installed, the **NORM** position is used. The **CLEAR** position will not destroy channel provision data if any special service channel unit is installed.

Set **NORM/CLEAR** option plug for **CLEAR** option (center and bottom pins).

9. Is system being converted from FPB Mode 1 to FPB Mode 2?

   If **YES,** then continue with Step **10.**
   If **NO,** then proceed to Step **11.**

10. When converting from FPB Mode 1 to FPB Mode 2, service interruption is unavoidable. Have central office equipment perform the necessary procedures to equip the system (in-service) before continuing. Ignore alarm indications while the central office equipment is being prepared for conversion. *If converting to a Mode 2 system, remove* ***LIU B and LIU D before the ADU is installed.***

11.

**CAUTION:**
*Incorrectly set ADU option switches may result in immediate or future loss of service or may introduce errors into the digital bitstream.*

Insert **ADU** into **ADU** slot in bank being equipped.

Response: After approximately 20 seconds, **ADU** and **BCU FAIL** indicators go off.

Comment: Other alarm indicators may take up to 4 minutes settle. It is normal for these alarms to go on and off during this initialization period. When converting from Mode 1 to Mode 2, or vice versa, all alarms (such as CLF, MJ, and digroups) will not clear until both ends have been equipped for the new configuration.

12. After approximately 20 seconds, do **ADU** and **BCU FAIL** indicators go off?

    If **YES,** then proceed to Step **21.**
    If **NO,** then continue with Step **13.**

13. Replace **BCU**.

14. After approximately 20 seconds, do **ADU** and **BCU FAIL** indicators go off?

    If **YES,** then proceed to Step **21.**
    If **NO,** then continue with Step **15.**

15. Replace **BCU** with **BCU** removed previously.

16. Remove **ADU** and check settings of switches on option switch **S1** per work order and Steps **2** - **8**.

17. Are switch settings on option switch correct?

    If **YES,** then continue with Step **18.**
    If **NO,** then proceed to Step **20.**

18. Get another **ADU** and set switches on option switch **S1** according to work order and Steps **2** - **8**.

19. **CAUTION:**
    *Incorrectly set ADU option switches may result in immediate or future loss of service or may introduce errors into the digital bitstream.*

    Insert **ADU** into **ADU** slot in bank being equipped. Proceed to Step **21.**

    Response: After approximately 20 seconds, **ADU** and **BCU FAIL** indicators go off.

20. Correct setting of switches on option switch and repeat from Step **11.**

21. Wait 10 minutes before doing this Step when converting to an FPC-AutoCut configuration. Wait until the **PRV** goes off for a Mode 1 or Mode 2 conversion. Remove **ADU** and set **CLEAR/NORM** option plug for **NORM**.

22. Reinstall **ADU**.

23.

**NOTE:**
The MC97771A1 or MC97776A1 BCU will detect if an incorrect version circuit pack is installed. The incompatible circuit pack will have the **FAIL** indicator on. *If the circuit pack is incompatible, for the system configuration, the FAIL indicator will go off when the* ***LED TEST button is pressed.***

Are any **FAIL** indicators lighted?

If **YES**, then continue with Step **24.**
If **NO**, **STOP. YOU HAVE COMPLETED THIS PROCEDURE.**

24. Observer circuit pack(s) with **FAIL** indicator on. Then press and hold **LED TEST** on **ADU**.

25. Did **FAIL** indicator go off when the **LED TEST** test button was pressed?

    If **YES**, then continue with Step **26.**
    If **NO**, then proceed to Step **27.**

26. Replace circuit pack with the required version and required option setting. Then repeat from Step **23.**

    Reference: DLP-500

27. Replace circuit pack with required option setting, and repeat from Step **23.**

    Reference: DLP-500

# Install Line Interface Unit (LIU)

**SUMMARY:** Set option switches located on side of **LIU** circuit board. Insert **LIU** into facility shelf in appropriate **LIU** slot. Verify that **FAIL** indicator on **LIU** lights momentarily and then goes off and remains off.

1.

**CAUTION:**
*An **AUA62**, **AUA62B**, **AUA62C** or **AUA62D** (line powering) **LIU** should not be installed in any SLC Series 5 carrier system dual bank assembly that is used in conjunction with a lightwave multiplexer.*

**CAUTION:**
*Incorrectly set LIU option switches may result in immediate or future loss of service or may introduce errors into the digital bitstream. All LIUs in the same bank should have identical option switch settings.*

Get one **LIU** (Figure 1, Figure 2, or Figure 3) and inspect for possible damage.

2. Is **LIU AUA61**, **AUA61B**, **AUA61C** or **AUA61D** being installed in the channel bank?

   If **YES,** then continue with Step **3.**
   If **NO,** then proceed to Step **6.**

3. Using orange stick (KS-6320, L1) or equivalent, set equalizer switches **S400** on **LIU AUA61/AUA61B** or **S2** on **LIU AUA61C** or **AUA61D** per work order (Table A).

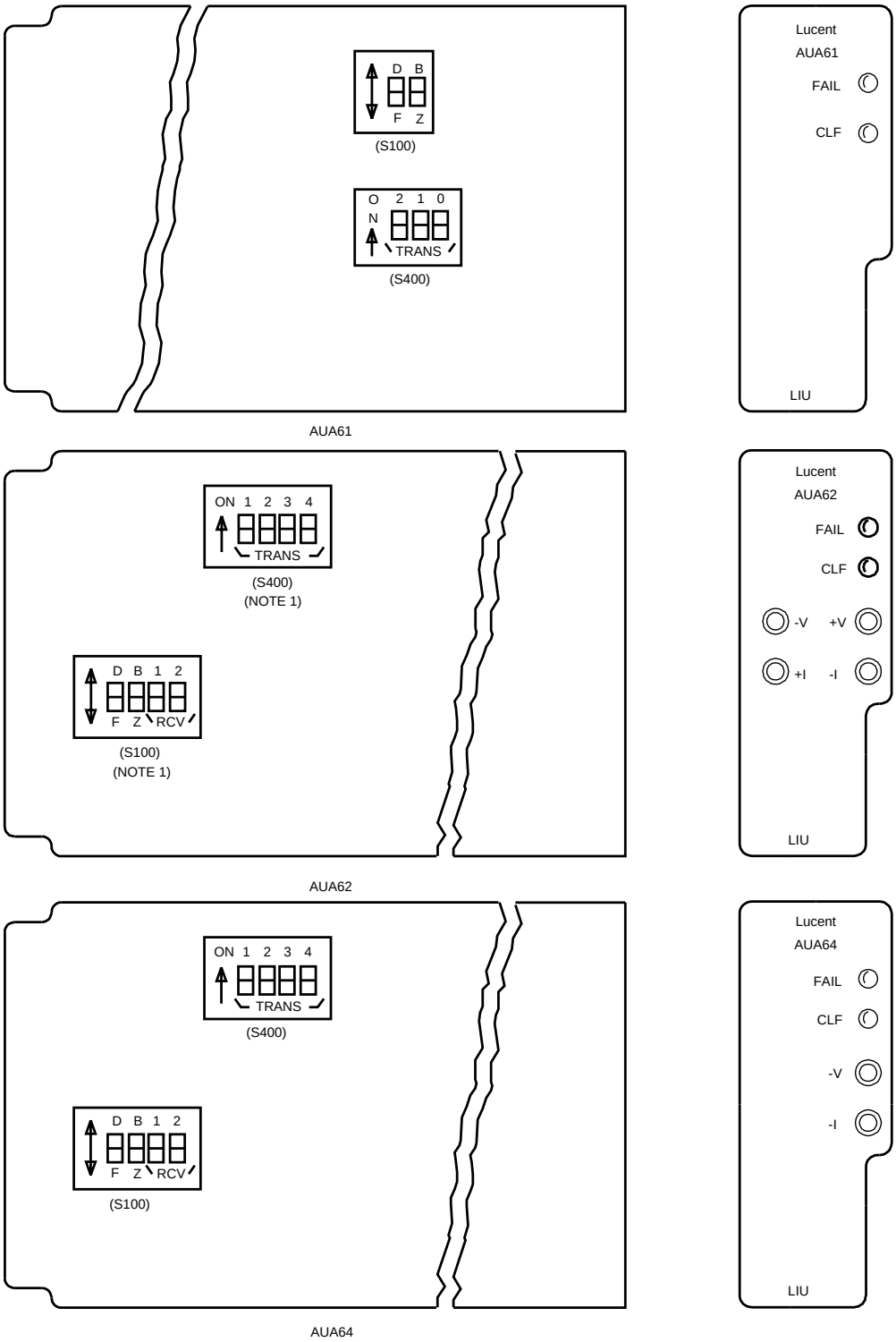


NOTE: 1. AUA62 HAS A DAUGHTER BOARD. HOWEVER, S100 AND S400 ARE ACCESSIBLE THROUGH HOLES IN THE DAUGHTER BOARD.

**Figure 1 – AUA61, AUA62, and AUA64 LIU Option Switches**

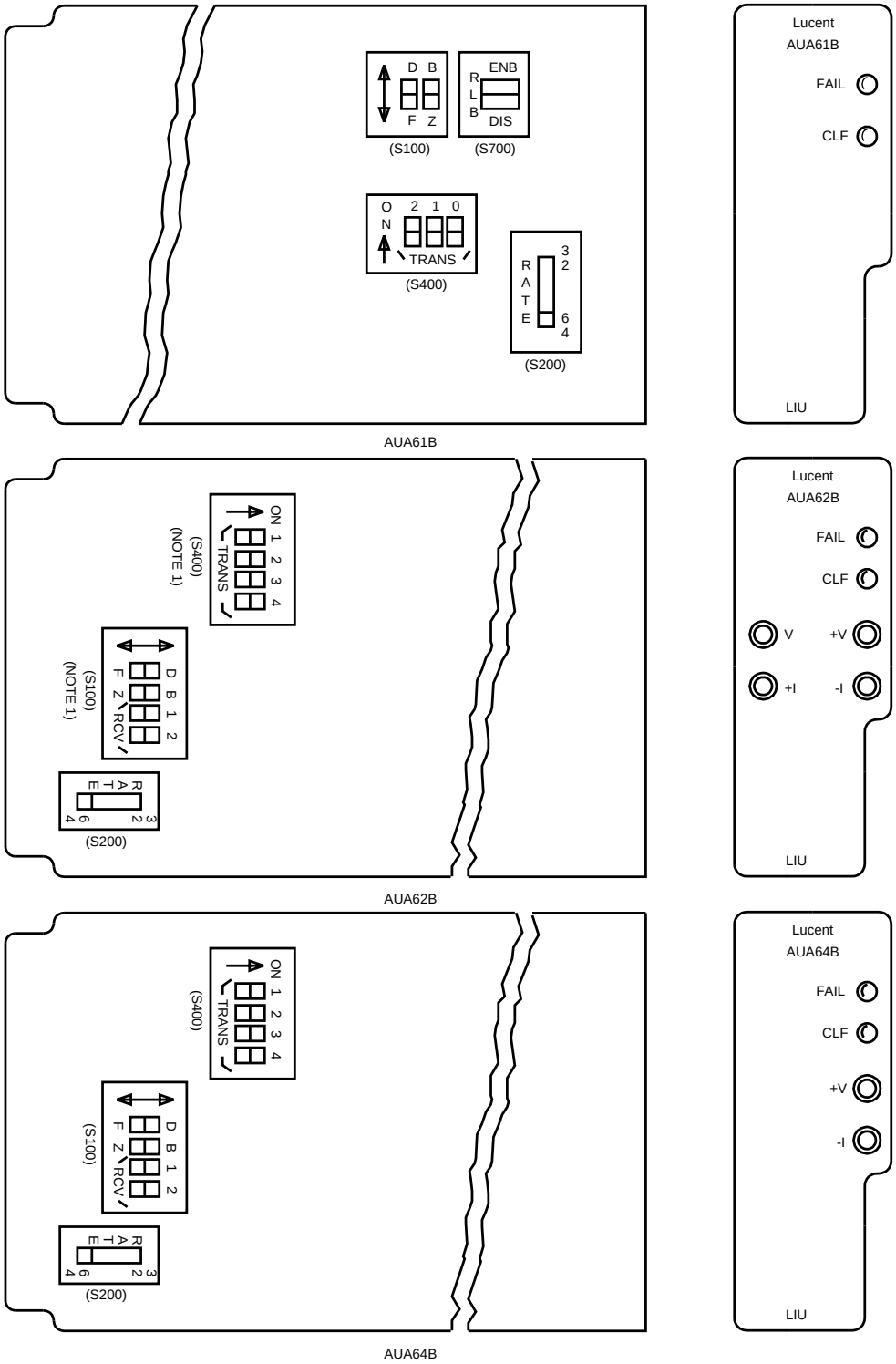


NOTE 1: AUA62B HAS A DAUGHTER BOARD. HOWEVER, S100 AND S400 ARE ACCESSIBLE THROUGH HOLES IN THE DAUGHTER BOARD.

**Figure 2 – AUA61B, AUA62B, and AUA64B LIU Option Switches**

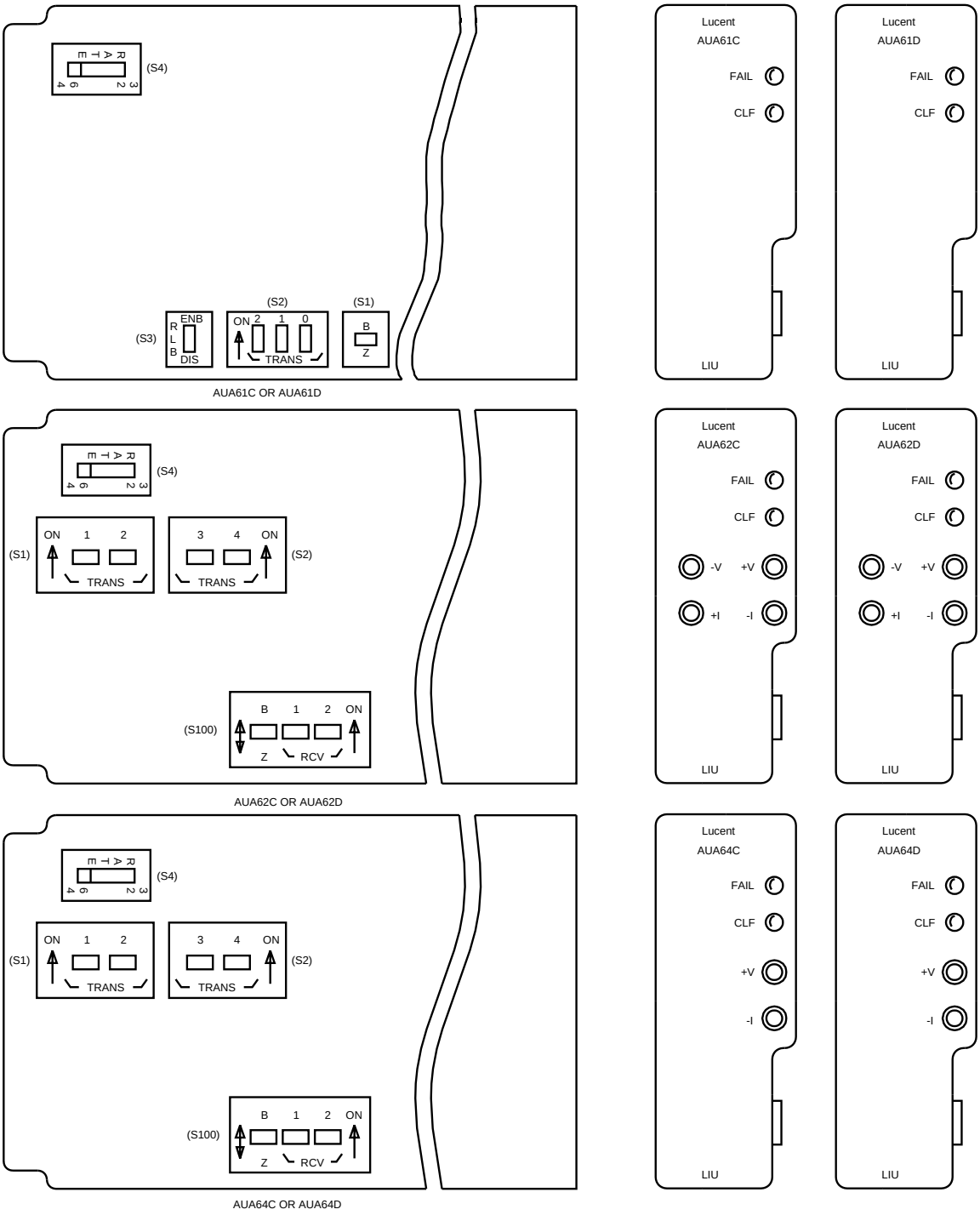


**Figure 3 – AUA61C/AUA61D, AUA62C/AUA62D, and AUA64C/AUA64D LIU Option Switches**

| Table A<br>AUA61( )<br>LIU Equalizer Settings | | | |
|---|---|---|---|
| **Distance to DSX-1** | **Equalizer Switch (S400/S2) Setting** | | |
| **(Feet)** | **2** | **1** | **0** |
| 0-132 | OFF | OFF | ON |
| 133-265 | OFF | ON | OFF |
| 266-398 | OFF | ON | ON |
| 399-532 | ON | OFF | OFF |
| 533-655 | ON | OFF | ON |

4. Is **LIU** an **AUA61B**, **AUA61C** or **AUA61D**?

   If **YES,** then continue with Step **5.**
   If **NO,** then proceed to Step **7.**

5. Set loopback enable/disable switch (**S700** or **S3**) to **ENB** if the channel bank is connected to a DDM-1000 Multiplexer, otherwise, set it to the **DIS** position. Proceed to Step **7.**

6. Using orange stick (KS-6320, L1) or equivalent, set transmit and receive pad switches on **LIU** per work order (Table B).

| Table B<br>AUA62( ) and AUA64( ) LIU Transmit/Receive Pad Setting | | | | | | |
|---|---|---|---|---|---|---|
| **Inserted Loss** | **Transmit Pad (S400/S1, S2) Switch Settings** | | | | **Receive Pad (S100) Switch Settings** | |
| **(dB)** | **1** | **2** | **3** | **4** | **1** | **2** |
| 22.5 | OFF | OFF | OFF | ON | — | — |
| 15.0 | OFF | OFF | ON | OFF | — | — |
| 7.5 | OFF | ON | OFF | OFF | OFF | ON* |
| 0 | ON | OFF | OFF | OFF | ON* | OFF |
| * ON when depressed toward the numbers. | | | | | | |

7.

**CAUTION:**
*Line coding on the digital facility and terminal equipment interfaces MUST BE THE SAME or service interruptions will result. Lucent recommends ZCS (also called AMI) option Z be used unless B8ZS option B is specified in the work order.*

**NOTE:**
Framing format switches are not present on **AUA61C** or **AUA61D**, **AUA62C** or **AUA62D**, and **AUA64C** or **AUA64D LIU**s.

Using orange stick (KS-6320, L1) or equivalent, set line coding and framing format switches on **LIU** per work order (Table C).

**Table C**
**LIU Line Coding and Framing Format Switch Settings**

| Option Description | LIU Switch (S1/S100) Settings |
|---|---|
| B8ZS Coding | B |
| ZCS Coding | Z† |
| ESF (Fe) Framing Format* | F |
| Fs Framing Format* | D‡ |

* Not present on AUA61C/D, AUA62C/D, or AUA64C/D LIUs.
† Use Z for FPB and FPC-AutoCut applications.
‡ Feature Package B (FPB) use only.

8. Is **LIU AUA61B**, **AUA61C** or **AUA61D**, **AUA62B**, **AUA62C** or **AUA62D**, **AUA64B**, or **AUA64C** or **AUA64D** being installed in the channel bank?

   If **YES,** then continue with Step **9.**
   If **NO,** then proceed to Step **12.**

9. Is **LIU** being installed in the channel bank assembly equipped for FPD capability?

   If **YES,** then proceed to Step **11.**
   If **NO,** then continue with Step **10.**

10. Set channel PCM-rate switch (**S200** or **S4**) to **64**. Continue with Step **12**.

11. Set channel PCM-rate switch (**S200** or **S4**) to **32**.

12.

> **NOTE:**
> **Read this Step completely before inserting LIU.** Tables D and E list alarm indicators that are present after the LIU, for your system configuration (Feature Package with or without protection), has been installed. These alarm indicators are listed on the same row as the LIU to be installed.

> **NOTE:**
> After installing **LIU** if the associated **DIGROUP**(s) indicator(s) on **BCU** does not go off, verify that option switch settings on **ADU** and **LIU** are correct.

Insert **LIU** into appropriate slot in facility shelf (left side for blue bank or right side for white bank) while observing indicators on **LIU** faceplate. See Table D or E for alarm indicators that change when the LIU is installed (for your Feature Package configuration).

Response: **LIU FAIL** indicator lights momentarily then goes off, and the associated **DIGROUP**(s) indicator(s) on **BCU** goes off.

Comment: If the **LIU FAIL** indicator does not go off, press and hold the **ADU LED TEST** button. If the **LIU FAIL** indicator goes off while the button is pressed, the circuit pack is not compatible with the channel bank application. Get the correct code circuit pack and verify **ADU** option switches are correct. The **AUB27 ADU CMP** indicator will light if the ADU is optioned wrong, an incompatible LIU was installed, or a wrong LIU option was set.

**Table D**
**LED Indicators for Digroups AB**

| System Configuration | | LIU (Note) | ADU | | | BCU | | | |
|---|---|---|---|---|---|---|---|---|---|
| **Digroups AB (and P) to be Equipped** | | | | | | | | | |
| **Protection** | **Feature Package ( )** | | **MJ** | **MN** | **NE** | **A** | **B** | | |
| With Protection | A, B Mode 1, or C | A | on | | on | off | on | | |
| | | B | off | on | on | | off | | |
| | | P | | off | off | | | | |
| | B Mode 2 or D | A | off | on | on | off | off | | |
| | | P | | off | off | | | | |
| Without Protection | A, B Mode 1, or C | A | on | | on | off | on | | |
| | | B | off | | off | | off | | |
| | B Mode 2 or D | A | off | | off | off | off | | |
| **Digroups AB and CD (and P) to be Equipped** | | | **MJ** | **MN** | **NE** | **A** | **B** | **C** | **D** |
| With or Without Protection | A, B Mode 1, or C | A | on | | on | off | on | on | on |
| | | B | on | | on | | off | on | on |
| | B Mode 2 or D | A | on | | on | off | off | on | on |

Note: LIU to be installed

**Table E**
**LED Indicators for Digroups CD**

| System Configuration | | LIU (Note) | ADU | | | BCU | |
|---|---|---|---|---|---|---|---|
| Digroups CD (and P) to be Equipped | | | | | | | |
| **Protection** | **Feature Package ( )** | | **MJ** | **MN** | **NE** | **C** | **D** |
| When Adding Protection | A, B Mode 1, or C | C | on | | on | off | on |
| | | D | off | on | on | | off |
| | | P | | off | off | | |
| | B Mode 2 or D | C | off | on | on | off | off |
| | | P | | off | off | | |
| When Not Adding Protection | A, B Mode 1, or C | C | on | | on | off | on |
| | | D | off | | off | | off |
| | B Mode 2 or D | C | off | | off | off | off |
| Note: LIU to be installed | | | | | | | |

13. Did **FAIL** indicator on **LIU** light momentarily?

    If **YES,** then proceed to Step **26.**
    If **NO,** then continue with Step **14.**

14. Replace **LIU** with correctly optioned **LIU** while observing **FAIL** indicator on **LIU** faceplate.

15. Did **FAIL** indicator on **LIU** light momentarily?

    If **YES,** then proceed to Step **26.**
    If **NO,** then continue with Step **16.**

16. Replace **TRU** associated with LIU. (**TRU** in AB shelf for **LIUs** A, B, or P. **TRU** in CD shelf for **LIU** C or D.)

17. Replace **LIU** with **LIU** removed previously while observing **FAIL** indicator on **LIU** faceplate.

18. Did **FAIL** indicator on **LIU** light momentarily?

    If **YES,** then proceed to Step **26.**
    If **NO,** then continue with Step **19.**

19. Unseat **LIU**.

20. Replace **TRU** with **TRU** removed previously.

21. **CAUTION:**
    *Incorrectly set ADU option switches may result in immediate or future loss of service or may introduce errors into the digital bitstream.*

    Replace **ADU** with a correctly optioned **ADU**.

22. Reseat **LIU** while observing **FAIL** indicator on **LIU** faceplate.

23. After approximately 20 seconds, did **FAIL** indicator on **LIU** light momentarily?

    If **YES,** then proceed to Step **26.**
    If **NO,** then continue with Step **24.**

24. **CAUTION:**
    *Incorrectly set ADU option switches may result in immediate or future loss of service or may introduce errors into the digital bitstream.*

    Replace **ADU** with **ADU** removed previously.

25. Check wiring between **PCU** in AB shelf and **LIU** using SD-7C117-01 or SD-7C117-02. Repeat procedure from Step **14** after locating and correcting trouble.

26. Did **FAIL** indicator on **LIU** go off and remain off?

    If **YES,** then **STOP. YOU HAVE COMPLETED THIS PROCEDURE.**
    If **NO,** then continue with Step **27.**

27. Remove and reinsert **ADU**.

28. Did **FAIL** indicator on **LIU** go off and remain off?

    If **YES,** then **STOP. YOU HAVE COMPLETED THIS PROCEDURE.**
    If **NO,** then continue with Step **29.**

29. Replace **LIU** with correctly optioned **LIU** while observing **FAIL** indicator on **LIU** faceplate.

30. Did **FAIL** indicator on **LIU** go off and remain off?

    If **YES,** then **STOP. YOU HAVE COMPLETED THIS PROCEDURE.**
    If **NO,** then continue with Step **31.**

31. Replace **LIU** with **LIU** removed previously.

32. Check wiring using SD-7C117-01 or SD-7C117-02. Repeat procedure from Step **14** after locating and correcting trouble.

# Install AUB24 Alarm Display Unit (ADU) for Feature Package B Mode 1 or Mode 2 Conversion

1. Remove, or get one, **AUB24 ADU** and inspect for possible damage.

2. Verify that fuse on **ADU** is not blown. If fuse is blown, get another **ADU** that contains a good fuse.

3. On **ADU** option switch **S2** (Figure 1) use an orange stick (KS-6320, L1) or equivalent and set switches as follows:

   - **1** - Away from number for protection switching or toward number for no protection switching.
   - **2** - Away from number, unless FPB Mode 2 (MC97771A1 or MC97776A1 BCU) application is being equipped (toward **2**).
   - **3** - Toward number to put shelf group AB in-service.
   - **4** - Toward number if shelf group CD is being equipped.
   - **5** - Toward number to equip shelf group AB.
   - **6** - Toward number if shelf group CD is being equipped.
   - **7** - Away from number.
   - **8** - Away from number if MISC2 is to report a minor alarm. Toward number if MISC2 is to report a major alarm.

4. Is a replacement ADU being installed or is the RT being converted to FPB Mode 2?

   If **being converted,** then continue with Step **5.**
   If **being replaced,** then proceed to Step **6.**

| AUB21 and AUB24 SWITCH SETTINGS | | |
|---|---|---|
| CLOSED | S2 | OPEN |
| NO PROTECTION | 1 | PROTECTION LINE |
| MODE 2 (AUA24 ONLY) | 2 | DS1 (AUA21)*; MODE 1 (AUA24 ONLY) |
| AB IN-SERVICE | 3 | AB PRE-SERVICE |
| CD IN-SERVICE | 4 | CD PRE-SERVICE |
| AB EQUIPPED | 5 | AB UNEQUIPPED |
| CD EQUIPPED | 6 | CD UNEQUIPPED |
| MJ ALARM-RT MISC1 (AUB21) | 7 | MN ALARM-RT MISC1 (AUB21) |
| 16 BIT ALARM FIELD (AUB24)† | | 13 BIT ALARM FIELD (AUB24)‡ |
| MJ ALARM-RT MISC2 (AUB21) | 8 | MN ALARM-RT MISC2 (AUB21) |
| UNUSED (AUB24) | | UNUSED (AUB24) |

* Always set switch 2 on AUB21 to OPEN.
† Reserved for future use.
‡ Always set switch 7 on AUB24 to OPEN.

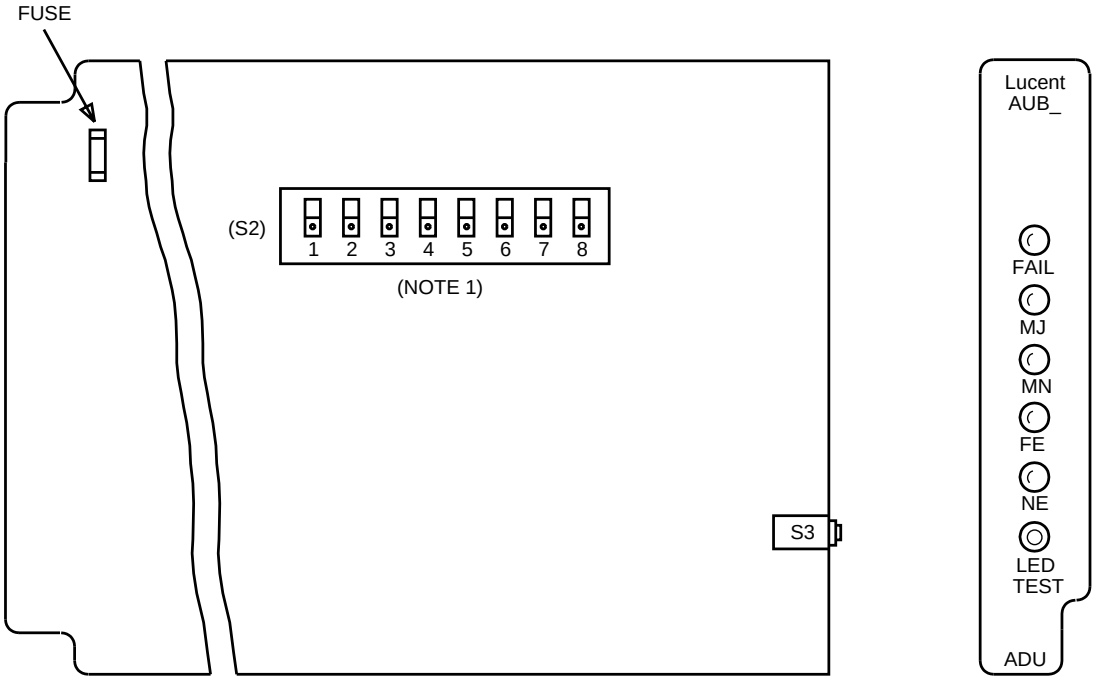


NOTE:
1. OPEN WHEN DEPRESSED AWAY FROM THE NUMBER
   CLOSED WHEN DEPRESSED TOWARDS THE NUMBER

**Figure 1 – AUB24 RT ADU Option Switch Settings**

5. When converting an FPA or FPC to FPB Mode 1 or 2, or converting an FPB Mode 1 to FPB Mode 2, service interruption is unavoidable. Have central office equipment perform the necessary procedures to equip the system (in-service) before continuing. Ignore alarm indications while the central office equipment is being prepared for conversion. *If converting to a Mode 2 system, remove* ***LIU B and LIU D before the ADU is installed.***

6. **CAUTION:**
   *Incorrectly set ADU option switches may result in immediate or future loss of service or may introduce errors into the digital bitstream.*

   Insert **ADU** into **ADU** slot in bank being equipped.

   Response: After approximately 20 seconds, **ADU** and **BCU FAIL** indicators go off.

   Comment: Other alarm indicators may take up to 4 minutes to settle. It is normal for these alarms to go on and off during this initialization period. When converting from Mode 1 to Mode 2, or vice versa, all alarms (such as CLF, MJ, and digroups) will not clear until both ends have been equipped for the new configuration.

7. After approximately 20 seconds, do **ADU** and **BCU FAIL** indicators go off?

   If **YES,** then **STOP. YOU HAVE COMPLETED THIS PROCEDURE.**
   If **NO,** then continue with Step **8.**

   "Incorrectly set ADU option switches may result in immediate "or future loss of service or may introduce errors into the "digital bitstream. ".Ae ".St 1 "Reinstall **ADU** into **ADU** slot. ".St 0 "After approximately 20 seconds, do **ADU** and "**BCU FAIL** indicators go off?

   If **YES,** then **STOP. YOU HAVE COMPLETED THIS PROCEDURE.**
   If **NO,** then continue with Step **8.**

8. Replace **BCU**.

9. After approximately 20 seconds, do **ADU** and **BCU FAIL** indicators go off?

   If **YES,** then **STOP. YOU HAVE COMPLETED THIS PROCEDURE.**
   If **NO,** then continue with Step **10.**

10. Replace **BCU** with **BCU** removed previously.

11. Remove **ADU** and check settings of switches on option switch **S1** per work order and Step **3**.

12. Are switch settings on option switch correct?

    If **YES,** then continue with Step **13.**
    If **NO,** then proceed to Step **14.**

13. Get another **ADU** and set switches on option switch **S1** according to work order and Step **3**.

14. **CAUTION:**
    *Incorrectly set ADU option switches may result in immediate or future loss of service or may introduce errors into the digital bitstream.*

    Insert **ADU** into **ADU** slot in bank being equipped.

    Response: After approximately 20 seconds, **ADU** and **BCU FAIL** indicators go off.

15. After approximately 20 seconds, do **ADU** and **BCU FAIL** indicators go off?

    If **YES,** then **STOP. YOU HAVE COMPLETED THIS PROCEDURE.**
    If **NO,** then continue with Step **16.**

16. Correct setting of switches on option switch and repeat from Step **6.**

# Perform End-to-End Test When Converting a Feature Package B Mode 2 to Mode 1

**SUMMARY:** Have COT personnel remove **TAU** circuit packs then install **LIU** circuit packs in **LIU** slots **B** and **D**. Verify that when the COT personnel installs the **LIU**, the RT **LIU CLF** indicator goes off and the digroup alarms clear. If a FPB COT is connected to the RT (not *SLC*-96 COT), alarms clear after the **TRU**s are installed. This procedure assumes the system is *universal*. If the system is *integrated*, the switching personnel will have to remove service on all digroups before converting to Mode 1. As switching personnel restores service to the digroups, verify that the RT digroup alarms clear.

1. If the central office is a FPB COT proceed to Step **13**.

2. Request COT personnel to remove **TAU** circuit packs.

   Response: Digroups **A** and **C** alarms clear on **BCU**.
   If protection line is available, digroup B switches to protection.

3. Request COT personnel to install **LIU** circuit packs in **LIU B** slot.

   Response: Digroup **B** alarms clear on **BCU**.
   If protection line is available, digroup D switches to protection.

4. After COT installs **LIU B**, did **LIU B CLF** and **BCU B** indicators go off?

   If **NO**, then continue with Step **5**.
   If **YES**, then proceed to Step **8**.

5. Perform the following items to clear trouble:
   - At COT, check **LIU** options and replace **LIU** if options are correct.
   - At RT, check **ADU** options and replace **ADU** if options are correct.
   - At RT, check **LIU** options and replace **LIU** if options are correct.

6. After performing the above Step, did **LIU B *CLF*** and **BCU B** indicators go off?

   If **NO**, then continue with Step **7**.
   If **YES**, then proceed to Step **8**.

7. Trouble on digital line associated with digroup B. Verify that digital pairs have been connected to the proper outside plant cable pairs. Use 363-205-500 or 363-202-500 TOP fault-locating procedures to locate trouble.

8. Request COT personnel to install **LIU** circuit packs in **LIU D** slot.

   Response: All alarms clear.

9. After COT installs **LIU D**, did all alarms clear?

   If **NO**, then continue with Step **10**.
   If **YES**, then **STOP. YOU HAVE COMPLETED THIS PROCEDURE.**

10. Perform the following items to clear trouble:
    - At COT, check **LIU** options and replace **LIU** if options are correct.
    - At RT, check **ADU** options and replace **ADU** if options are correct.
    - At RT, check **LIU** options and replace **LIU** if options are correct.

11. After performing the above Step, did all alarm indicators go off?

    If **NO**, then continue with Step **12**.
    If **YES**, then **STOP. YOU HAVE COMPLETED THIS PROCEDURE.**

12. Trouble on digital line associated with digroup D. Verify that digital pairs have been connected to the proper outside plant cable pairs. Use 363-205-500 or 363-202-500 TOP fault-locating procedures to locate trouble.

13. Request COT personnel to install **TRU** for shelf group AB

    Response: **LIU-A**, **LIU-B, and LIU-P** (if equipped) **CLF** LEDs go off.
    Digroups **A** and **B** alarms clear on **BCU** with in 4 minutes.

14. After COT installs **TRU** AB, did **LIU-A, -B CLF** (and -P if equipped) and **BCU A** and **B** indicators go off?

    If **NO**, then continue with Step **15**.
    If **YES**, then proceed to Step **18**.

15. Perform the following items to clear trouble:

    - At COT, check **ADU** and **LIU** options and verify correct version common units are installed.
    - At RT, check **ADU** options and replace **ADU** if options are correct.
    - At RT, check **LIU** options and replace **LIU** if options are correct.

16. After performing the above Step, did **LIU-A, -B CLF** (and -P if equipped) and **BCU A** and **B** indicators go off?

    If **NO**, then continue with Step **17**.
    If **YES**, then proceed to Step **18**.

17. Trouble on digital line associated with digroup B. Verify that digital pairs have been connected to the proper outside plant cable pairs. Use 363-205-500 or 363-202-500 TOP fault-locating procedures to locate trouble.

18. Request COT personnel to install **TRU** for shelf group CD

    Response: All alarms clear with in 4 minutes.

19. After COT installs **TRU** CD, did all alarms clear?

    If **NO**, then continue with Step **20**.
    If **YES**, then **STOP. YOU HAVE COMPLETED THIS PROCEDURE.**

20. Perform the following items to clear trouble:

    - At COT, check **ADU** and **LIU** options and verify correct version common units are installed.
    - At RT, check **ADU** options and replace **ADU** if options are correct.
    - At RT, check **LIU** options and replace **LIU** if options are correct.

21. After performing the above Step, all alarms clear?

    If **NO**, then continue with Step **22**.
    If **YES**, then **STOP. YOU HAVE COMPLETED THIS PROCEDURE.**

22. Trouble on digital line associated with digroup D. Verify that digital pairs have been connected to the proper outside plant cable pairs. Use 363-205-500 or 363-202-500 TOP fault-locating procedures to locate trouble.

# Perform End-to-End Test When Converting a Feature Package B Mode 1 to Mode 2

**SUMMARY:** Have COT personnel remove **LIU** circuit packs then install TAU (**TRU** for FPB COT) circuit packs in **LIU** slots **B** and **D**. Verify that when the COT personnel installs the **TAU**, the RT **LIU CLF** indicator goes off and the Digroup alarms clear. If a FPB COT is connected to the RT (not *SLC*-96 COT), alarms clear after the **TRU**s are installed. This procedure assumes the system is *universal*. If the system is *integrated*, the switching personnel will have to remove service on all digroups before converting to Mode 2. As switching personnel restores service to the digroups, verify that the RT digroup alarms clear.

1.

**NOTE:**
When starting this procedure, all digroups indicators will be lighted on the BCU.

In the following steps **TAU** indicates that a *SLC* 96 COT is used at the central office, **TRU** indicates that a FPB COT is used at the central office.

Request COT personnel to install **TAU**/**TRU** (in shelf group AB TRU slot) circuit packs in **LIU** slot **B**.

Response: Digroups **A** and **B** alarms clear on **BCU**.

2. After COT installs **TAU**/**TRU**, did **LIU A** ***CLF*** and **BCU A** and **B** indicators go off?

If **NO**, then continue with Step **3**.
If **YES**, then proceed to Step **6**.

3. Perform the following items to clear trouble:
   - At COT, replace **TAU/TRU** (check circuit pack version and option settings).
   - At RT, check **ADU** options and replace **ADU** if options are correct.
   - At RT, replace **AUA105 TRU**.
   - At RT, check **AUA6( )D LIU** options and replace **LIU** if options are correct. See DLP-507

4. After performing the above Step, did **LIU A *CLF*** and **BCU A** and B indicators go off?

   If **NO**, then continue with Step **5**.
   If **YES**, then proceed to Step **7**.

5. Replace **MC97771A1** or **MC97776A1 BCU**. If trouble does not clear, check wiring using SD-7C117-01 or SD-7C117-02 (SD-7C118-01 or SD-7C150-01 for FTTH) to clear trouble before continuing.

6. Request COT personnel to install **TAU/TRU** (in shelf group CD TRU slot) circuit packs in **LIU** slot **D**.

   Response: Digroups **C** and **D** alarms clear on **BCU**.
   Minor alarm indicator may be on if the system is integrated and the protection line has not been restored.

7. After COT installs **TAU/TRU**, did alarms clear?

   If **NO**, then continue with Step **8**.
   If **YES**, then proceed to Step **11**.

8. Perform the following items to clear trouble:
   - At COT, replace **TAU/TRU** (check circuit pack version and option settings).
   - At RT, check **ADU** options and replace **ADU** if options are correct.
   - At RT, replace **AUA105 TRU**.
   - At RT, check **AUA6( )D LIU** options and replace **LIU** if options are correct. See DLP-507

9. After performing the above Step, did alarms clear?

   If **NO**, then continue with Step **10**.
   If **YES**, then proceed to Step **11**.

10. Replace **MC97771A1** or **MC97776A1 BCU**. If trouble does not clear, check wiring using SD-7C117-01 or SD-7C117-02 (SD-7C118-01 or SD-7C150-01 for FTTH).

11. ⚠ **CAUTION:**
    *If you have a FTTH system,* ***STOP. YOU HAVE COMPLETED THIS PROCEDURE.*** *Performing this test will result in permanent damage to AYB1B units in the optical shelf.*

    Obtain one special service channel unit **AUA41, AUA42, AUA43, AUA44, AUA54,** or **AUA52** and install in any channel unit slot except the last four slots for digroup A.

    Response: The **SPL** indicator on the **AUA105 TRU** lights.

12. Did **SPL** indicator light on the **AUA105 TRU**?

    If **YES**, continue with Step **13**.
    If **NO**, proceed to Step **14**.

13. Remove channel unit and repeat Step **11** for each new digroup (B, C, and D).

    **STOP. YOU HAVE COMPLETED THIS PROCEDURE.**

14. Replace, one at a time, the **AUA105 TRU, AUB27 ADU, MC97771A1** or **MC97776A1 BCU** with correct option setting and repeat **SPL** indicator test after each replacement. If the **SPL** indicator does not light after these units have been replaced, check wiring using SD-7C117-01 or SD-7C117-02 (SD-7C118-01 or SD-7C150-01 for FTTH).

# Install Line Switch Unit (LSU) in Facility Shelf

1.

**NOTE:**
An **AUA13 LSU** cannot be used in an RT channel bank assembly equipped for FPD operation.

Get one **LSU** (Line Switch Unit) (**AUA13** or **AUA73**) and inspect for possible damage.

2. Is the **LSU** an **AUA13**?

   If **YES,** then proceed to Step **6.**
   If **NO,** then continue with Step **3.**

3. Is **LSU** being installed in RT channel bank assembly equipped for FPD capability?

   If **YES,** then continue with Step **4.**
   If **NO,** then proceed to Step **5.**

4. Set switch **S2** located on the side of the **LSU** circuit pack (Figure 1) to position **32** and proceed to Step **6.**

5. Set switch **S2** located on the side of the **LSU** circuit pack (Figure 1) to position **64**.

6. Set all eight force (**f**)/deny (**d**) switches on the **LSU** faceplate to off (right-hand side) position (Figure 2).

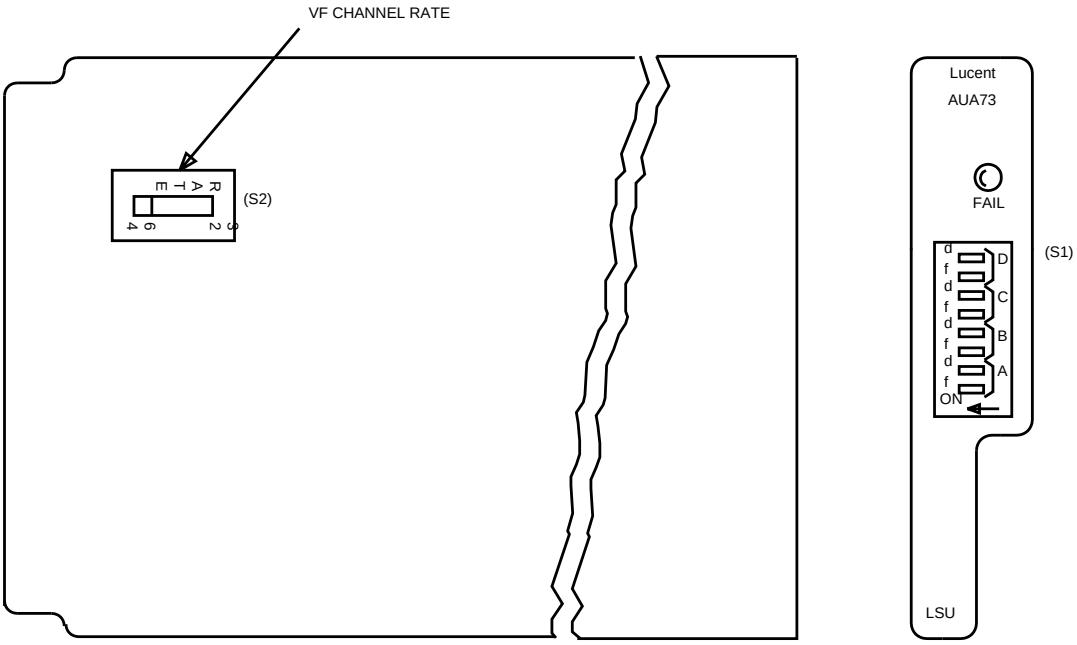


**Figure 1 – AUA73 LSU Option and Faceplate Switches**

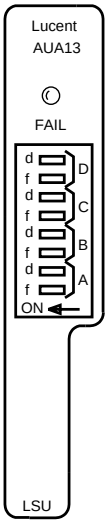


**Figure 2 – AUA13 Line Switch Unit Faceplate**

7.

**CAUTION:**
*Incorrectly set LSU option switches may result in immediate or future loss of service or may introduce errors into the digital bitstream.*

While observing **FAIL** indicator on **LSU** faceplate, insert **LSU** into **LSU** slot in middle (for the blue bank) or right side (for white bank) of facility shelf.

Response: **LSU FAIL** indicator lights momentarily. **MN** and **NE** indicators on **ADU** are lighted.

8. Does **LSU FAIL** indicator go off and remain off?

If **YES,** then proceed to Step **15.**
If **NO,** then continue with Step **9.**

9. Remove **LSU**.

10. Get a replacement **LSU** and set option switches according to Steps **2** through **6**.

11.

**CAUTION:**
*Incorrectly set LSU option switches may result in immediate or future loss of service or may introduce errors into the digital bitstream.*

While observing **FAIL** indicator on **LSU** faceplate, insert **LSU** into **LSU** slot in facility shelf.

Response: **LSU FAIL** indicator lights momentarily and **MN** and **NE** indicators on **ADU** are lighted.

12. Does **LSU FAIL** indicator go off and remain off?

If **YES,** then proceed to Step **15.**
If **NO,** then continue with Step **13.**

13.

**CAUTION:**
*Incorrectly set LSU option switches may result in immediate or future loss of service or may introduce errors into the digital bitstream.*

Replace **LSU** with **LSU** removed previously while observing **FAIL** indicator on the **LSU** faceplate.

14. Check wiring using SD-7C117-01 or SD-7C117-02. Repeat procedure from Step **7** after locating and correcting trouble.

15. Did **FAIL** indicator on **LSU** light momentarily?

    If **YES,** then **STOP. YOU HAVE COMPLETED THIS PROCEDURE.**
    If **NO,** then continue with Step **16.**

16. Remove **LSU**.

17. Get a replacement **LSU** and set option switches according to Steps **2** through **6**.

18. **CAUTION:**
    *Incorrectly set LSU option switches may result in immediate or future loss of service or may introduce errors into the digital bitstream.*

    While observing **FAIL** indicator on **LSU** faceplate, insert **LSU** into **LSU** slot in facility shelf.

    Response: **LSU FAIL** indicator lights momentarily and **MN** and **NE** indicators on **ADU** are lighted.

19. Did **FAIL** indicator on **LSU** light momentarily?

    If **YES,** then **STOP. YOU HAVE COMPLETED THIS PROCEDURE.**
    If **NO,** then continue with Step **20.**

20. Remove **ADU** and check for proper option settings.

21. Are option switches on **ADU** set correctly?

    If **YES,** then proceed to Step **24.**
    If **NO,** then continue with Step **22.**

22. Set option switches on **ADU** to correct positions and reinsert **ADU** into **ADU** slot.

23. **CAUTION:**
    *Incorrectly set LSU option switches may result in immediate or future loss of service or may introduce errors into the digital bitstream.*

    Wait 20 seconds and then replace **LSU** with **LSU** removed previously and repeat from Step **7.**

24.

**CAUTION:**
*Incorrectly set ADU option switches may result in immediate or future loss of service or may introduce errors into the digital bitstream.*

Replace **ADU** with another correctly optioned **ADU**.

25.

**CAUTION:**
*Incorrectly set LSU option switches may result in immediate or future loss of service or may introduce errors into the digital bitstream.*

Wait 20 seconds and then replace **LSU** with the **LSU** removed previously while observing **FAIL** indicator on **LSU** faceplate.

26. Did **FAIL** indicator on **LSU** light momentarily?

    If **YES,** then **STOP. YOU HAVE COMPLETED THIS PROCEDURE.**
    If **NO,** then continue with Step **27.**

27.

**CAUTION:**
*Incorrectly set ADU option switches may result in immediate or future loss of service or may introduce errors into the digital bitstream.*

Replace **ADU** with **ADU** removed previously.

28. Check wiring between facility shelf **PCU** and **LSU** using SD-7C117-01 or SD-7C117-02. Repeat procedure from Step **7** after locating and correcting trouble.

# Install Alarm Display Unit in FP303 Optioned for Preservice and Unequipped

1. Get one alarm display unit (**ADU**), as required, and inspect for possible damage.

2. On **AUB27( )** option switch **S1** (Table A and Figure 1), use an orange stick (KS-6320, L1) or equivalent and set switch positions as follows:

   - **1** - Toward **PL** if equipping system with protection switching. Otherwise, toward **NPL**. (See work order.)
   - **2** - Toward **4**.
   - **3** - Toward **ABP**.
   - **4** - Toward **CDP**.
   - **5** - Toward **ABU**.
   - **6** - Toward **CDU**.
   - **7** - Toward **1MJ** if **MISC1** is to report a major alarm or toward **1MN** if **MISC1** is to report a minor alarm. (See work order.)
   - **8** - Toward **2MJ** if **MISC2** is to report a major alarm or toward **2MN** if **MISC2** is to report a minor alarm. (See work order.)

| **Table A<br>AUB27( ) Switch Setting** | | |
|---|---|---|
| **S1 Switch** | | |
| No Protection Line (***NPL***) | 1 | Protection Line (***PL***) |
| ***2*** | 2 | Use ***4*** |
| AB In-Service (***ABI***) | 3 | AB Preservice (***ABP***) |
| CD In-Service (***CDI***) | 4 | CD Preservice (***CDP***) |
| AB Equipped (***ABE***) | 5 | AB Unequipped (***ABU***) |
| CD Equipped (***CDE***) | 6 | CD Unequipped (***CDU***) |
| Major Alarm for MISC1 (***1MJ***) | 7 | Minor Alarm for MISC1 (***1MN***) |
| Major Alarm for MISC2 (***2MJ***) | 8 | Minor Alarm for MISC2 (***2MN***) |
| **S2 Switch** | | |
| Use ***16*** | 1 | ***13*** |
| ***FS*** | 2 | Use ***FE*** |
| Use ***NC*** | 3 | ***CUT*** |
| Use ***SGL*** | 4 | ***DBL*** |
| ***PA*** | 5 | Use ***NPA*** |
| ***MJP*** | 6 | Use ***MNP*** |
| LIU B DS1 Equipped | 7 | LIU B DS1 Unequipped |
| LIU D DS1 Equipped | 8 | LIU D DS1 Unequipped |
| **S3 Switch** | | |
| Use ***DL*** | | ***NDL*** |
| **CLEAR/NORM Plug** | | |
| Clear Provisioning<br>(Use ***CLEAR*** When ADU is first installed in a new system) | | Do Not Clear Provisioning<br>(Use ***NORM*** for In-Service System) |
| **S4, S5, S6, and S7 Rotary Switches** | | |
| System ID Number | | |
| **S8, S9, S10, and S11 Rotary Switches** | | |
| Unused (Set to 0) | | |

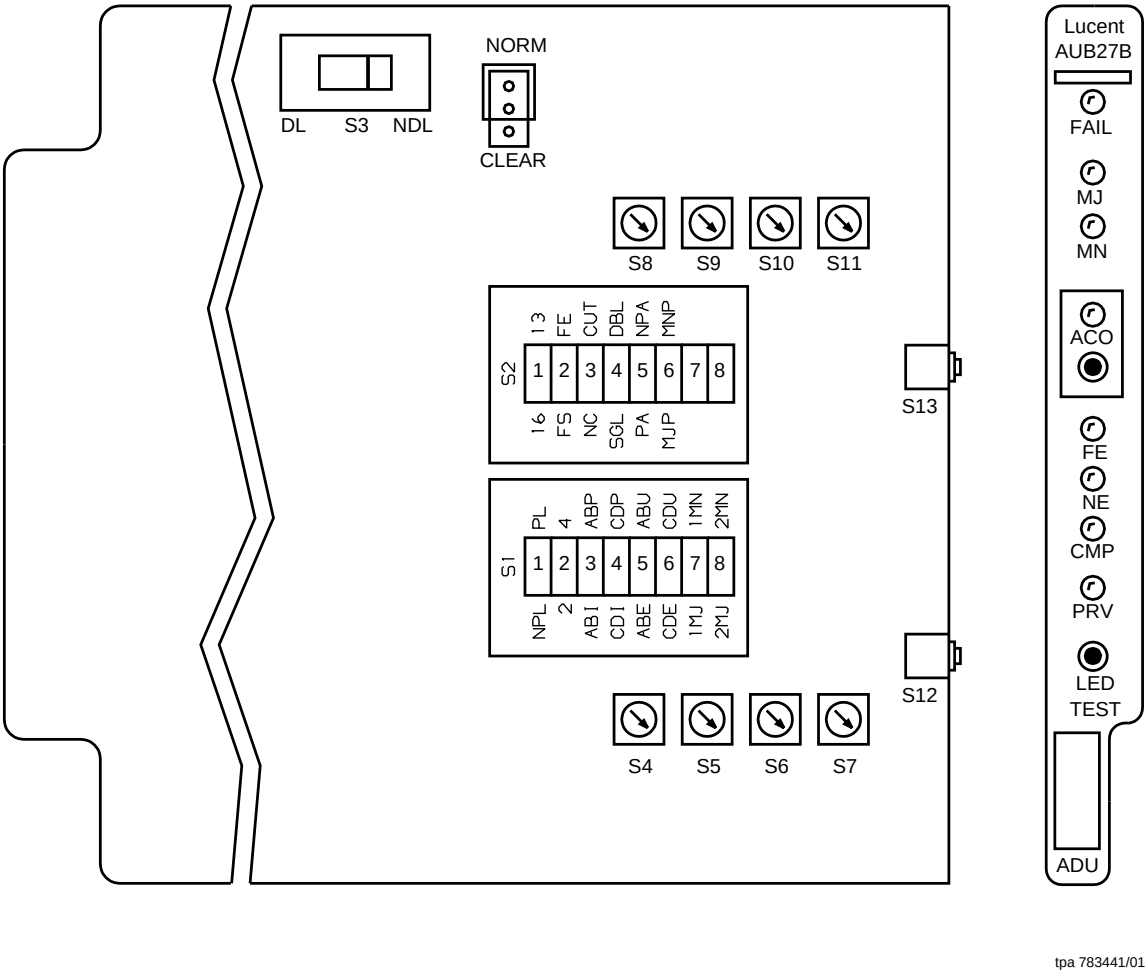


**Figure 1 – AUB27( ) RT ADU Option Switch Settings**

3. On **AUB27( ) ADU** option switch **S2** (Table A and Figure 1), use an orange stick (KS-6320) or equivalent and set switches as follows:
   - **1** - Toward **16**.
   - **2** - Toward **FE**.
   - **3** - Toward **NC**.
   - **4** - Toward **SGL**.
   - **5** - Toward **NPA**.

- **6** - Toward **MNP**.
- **7** - Toward right (**MNP** side of switch).
- **8** - Toward right (**MNP** side of switch).

4. Set switch **S3** toward **DL**.

5. Set system identification rotary switches **S4** (most significant digit) through **S7** (least significant digit) to bank ID number. (See work order.)

6. Rotary switches **S8** through **S11** are unused (set to 0).

7. 

**NOTE:**
The **NORM/CLEAR** switch option is used to automatically clear random channel provisioning data stored in the **ADU** and **BCU**.

Set **NORM/CLEAR** option plug for **CLEAR** option (AUB27( ) center and bottom pins).

8. 

**CAUTION:**
*Incorrectly set **ADU** option switches may result in immediate or future loss of service or may introduce errors into the digital bitstream.*

Insert **ADU** into lower **ADU** slot if equipping blue bank or upper **ADU** slot if equipping white bank. Disregard all alarms.

**STOP. YOU HAVE COMPLETED THIS PROCEDURE.**

# Install FP303 Bank Control Unit

1. Get one **MC97777A1** bank control unit (**BCU**) and inspect for possible damage.

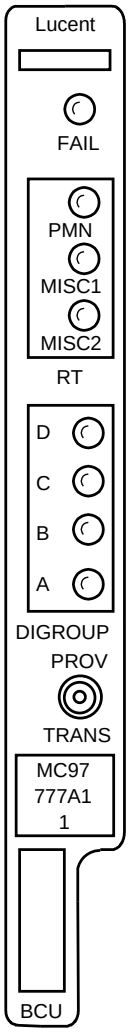


tpa 813536/01

**Figure 1 – MC97777A1 BCU Faceplate**

2. Insert the **BCU** into lower **BCU** slot if equipping blue bank or upper **BCU** slot is equipping the white bank. Within 75 seconds, all indicators go off and the **PRV** LED on the **ADU** lights. Wait for the **PRV** indicator to go off before removing the **ADU** or **BCU**. It can take up to 10 minutes for **PRV** LED to go off.

3. Did all alarm indicators go off?

   If **YES**, then **STOP. YOU HAVE COMPLETED THIS PROCEDURE.**
   If **NO**, then continue with Step **4.**

4. Replace **BCU**.

5. Did all alarm indicators go off?

   If **YES**, then **STOP. YOU HAVE COMPLETED THIS PROCEDURE.**
   If **NO**, then continue with Step **6.**

6. Replace the **BCU** with the one removed previously.

7. **CAUTION:**
   *Incorrectly set ADU option switches can result in immediate or future loss of service or can introduce errors into the digital bitstream.*

   Replace **ADU**.

   Reference: DLP-512

8. Did all alarm indicators go off?

   If **YES**, then **STOP. YOU HAVE COMPLETED THIS PROCEDURE.**
   If **NO**, then continue with Step **9.**

9. Replace the **ADU** with the one removed previously.

10. Check wiring using SD-7C117-01 or SD-7C117-02. Repeat procedure from Step **2** after locating and correcting the trouble.

# Set the Option Switches on a C- or D-type LIU

1.

**CAUTION:**
*Do not use a line powering **LIU** (**AUA62C** or **D**) in applications with a lightwave multiplexer. The powering **LIU**s may damage the multiplexer low speed interface pack.*

**CAUTION:**
*Incorrectly set **LIU** option switches may result in immediate or future loss of service or may introduce errors into the digital bitstream. All **LIU**s in the same bank should have identical option switch settings.*

Get one C- or D-type line interface unit (**LIU**) (Figure 1) and inspect for possible damage.

2. Is the **LIU** an **AUA61C or D**?

   If **YES**, then continue with Step **3**.
   If **NO**, then go to Step **5**.

3. Using an orange stick (KS-6320, L1) or equivalent, set the equalizer switches (**S2**) per work order (Table A).

4. Set the loopback enable/disable switch (**S3**) to **DIS**. Go to Step **6**.

5. Set the transmit and receive pad switches per work order (Table B).

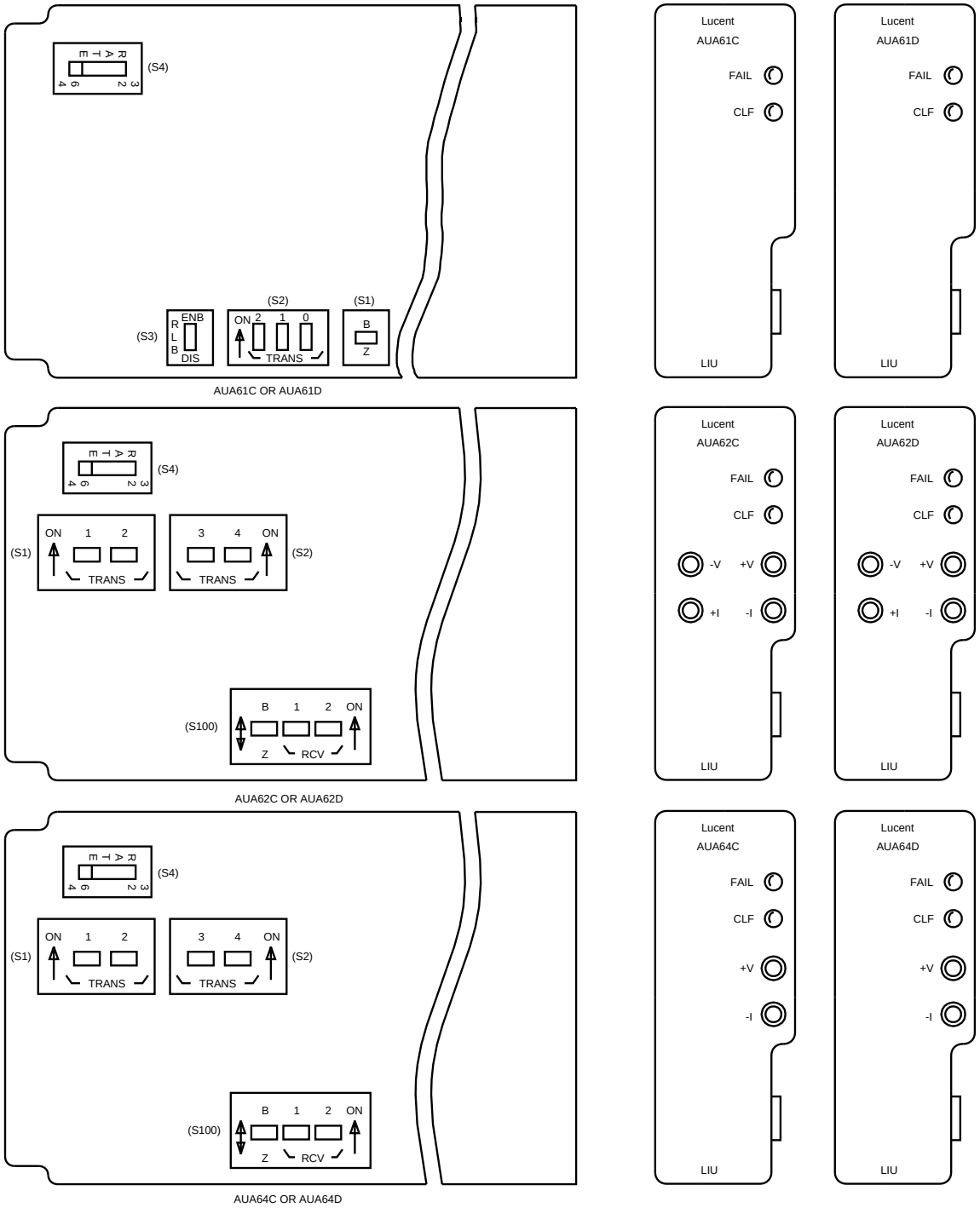


**Figure 1 – C- and D-Type LIU Option Switches and Faceplates**

| Table A<br>AUA61C or D<br>LIU Equalizer Settings | | | |
|---|---|---|---|
| **Distance to DSX-1** | **Equalizer Switch (S400/S2) Setting** | | |
| **(Feet)** | **2** | **1** | **0** |
| 0-132 | OFF | OFF | ON |
| 133-265 | OFF | ON | OFF |
| 266-398 | OFF | ON | ON |
| 399-532 | ON | OFF | OFF |
| 533-655 | ON | OFF | ON |

| Table B<br>AUA62C or D and AUA64C or D LIU Transmit/Receive Pad Setting | | | | | | |
|---|---|---|---|---|---|---|
| **Inserted Loss** | **Transmit Pad (S400/S1, S2) Switch Settings** | | | | **Receive Pad (S100) Switch Settings** | |
| **(dB)** | **1** | **2** | **3** | **4** | **1** | **2** |
| 22.5 | OFF | OFF | OFF | ON | — | — |
| 15.0 | OFF | OFF | ON | OFF | — | — |
| 7.5 | OFF | ON | OFF | OFF | OFF | ON* |
| 0 | ON | OFF | OFF | OFF | ON* | OFF |
| * ON when depressed toward the numbers. | | | | | | |

6.

**CAUTION:**
*Line coding on the digital facility and terminal equipment interfaces MUST BE THE SAME or service interruptions can result.*

Set the line coding switch (**S1** on the **AUA61C or D** or **S100** on the **AUA62C or D** or **AUA64C or D**) to **B8ZS** (Table C).

| Table C<br>LIU Line Coding Switch Setting | |
|---|---|
| **Option Description** | **LIU Switch (S1 or S100) Settings** |
| B8ZS Coding<br>ZCS Coding | B<br>Z |

7. Set the **RATE** switch (**S4**) to **64**.

8. Install the **LIU**.

**STOP. YOU HAVE COMPLETED THIS PROCEDURE.**

# Perform RT Indicator Test

1. Press and hold **LED TEST** pushbutton on **ADU**.

2. Are all indicators listed in Table A lighted during LED test?

   If **YES,** then **STOP. YOU HAVE COMPLETED THIS PROCEDURE.**
   If **NO,** then continue with Step **3.**

| **Table A<br>Series 5 RT Led Test** | |
|---|---|
| **Unit** | **Indicator Lit** |
| AUB27( ) ADU | All LEDs |
| BCU | All LEDs |
| TRU | All LEDs |
| LIU | All LEDs |
| CTU | FAIL |

3. Are any of the indicators lighted during LED test?

   If **YES,** then continue with Step **4.**
   If **NO,** then proceed to Step **5.**

4. **CAUTION:**
   *Any time a circuit pack containing option switches is replaced in an RT assembly, ensure that any option switches are set per the work order or engineering records. Incorrectly set LIU, LSU, or ADU option switches may result in immediate or future loss of service or may introduce errors into the digital bitstream.*

   Replace unit(s) that contain indicators that do not light and repeat from Step **1.**

5. Replace **BCU**.

6. Press and hold **LED TEST** pushbutton on **ADU**.

7. Are all indicators listed in Table A lighted during LED test?

   If **YES,** then **STOP. YOU HAVE COMPLETED THIS PROCEDURE.**
   If **NO,** then continue with Step **8.**

8. Are any of the indicators lighted during LED test?

   If **YES,** then proceed to Step **4.**
   If **NO,** then continue with Step **9.**

9. Replace **BCU** with **BCU** removed previously.

10. **CAUTION:**
    *Incorrectly set ADU option switches may result in immediate or future loss of service or may introduce errors into the digital bitstream.*

    Replace **ADU**. Verify that option switch settings on replacement **ADU** agree with option switch settings on **ADU** being replaced.

11. Press and hold **LED TEST** pushbutton on **ADU**.

12. Are all indicators listed in Table A lighted during LED test?

    If **YES,** then **STOP. YOU HAVE COMPLETED THIS PROCEDURE.**
    If **NO,** then continue with Step **13.**

13. Are any of the indicators lighted during LED test?

    If **YES,** then proceed to Step **4.**
    If **NO,** then continue with Step **14.**

14. **CAUTION:**
    *Incorrectly set ADU option switches may result in immediate or future loss of service or may introduce errors into the digital bitstream.*

    Replace **ADU** with **ADU** removed previously.

15. Refer to SD-7C117-01 or SD-7C117-02. Repeat procedure from Step **1** after locating and correcting trouble.

# Install AUA74 Line Switch Unit (LSU) in Facility Shelf

1. Get one **AUA74 LSU** (Line Switch Unit) and inspect for possible damage.

2. **CAUTION:**
   *Incorrectly set LSU option switches may result in immediate or future loss of service.*

   Set all eight force (**f**)/deny (**d**) switches on **LSU** faceplate to off (right-hand side) position (Figure 1).

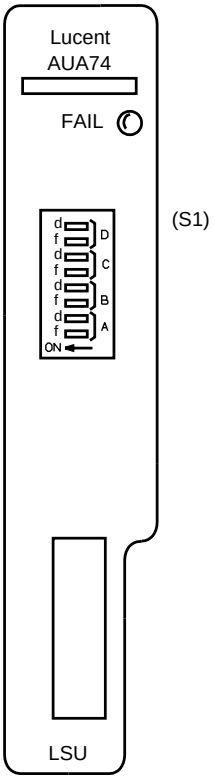


tpa 813554/01

**Figure 1 – AUA74 Line Switch Unit Faceplate**

While observing **FAIL** indicator on **LSU** faceplate, insert **LSU** into **LSU** slot in middle (for the blue bank) or right side (for white bank) of facility shelf.

Response: **LSU FAIL** indicator lights momentarily. **MN** and **NE** indicators on **ADU** are lighted.

3. Did **LSU FAIL** indicator light momemtarily and go off?

   If **YES,** then **STOP. YOU HAVE COMPLETED THIS PROCEDURE.**
   If **NO,** then continue with Step **4.**

4. Remove **LSU**.

5. **CAUTION:**
   *Incorrectly set LSU option switches may result in immediate or future loss of service.*

   Get a replacement **LSU** and set all eight force (**f**)/deny (**d**) switches on **LSU** faceplate to off (right-hand side) position (Figure 1).

6. While observing **FAIL** indicator on **LSU** faceplate, insert **LSU** into **LSU** slot in facility shelf.

   Response: **LSU FAIL** indicator lights momentarily and **MN** and **NE** indicators on **ADU** are lighted.

7. Did **FAIL** indicator on **LSU** light momentarily and go off?

   If **YES,** then **STOP. YOU HAVE COMPLETED THIS PROCEDURE.**
   If **NO,** then continue with Step **8.**

8. Remove **ADU** and check for proper option settings.

   Reference: DLP-512

9. Are option switches on **ADU** set correctly?

   If **YES,** then proceed to Step **12.**
   If **NO,** then continue with Step **10.**

10. Set option switches on **ADU** to correct positions and reinsert **ADU** into **ADU** slot.

11. Wait 20 seconds and then replace **LSU** with **LSU** removed previously and repeat from Step **3.**

12.

**CAUTION:**
*Incorrectly set ADU option switches may result in immediate or future loss of service or may introduce errors into the digital bitstream.*

Replace **ADU** with another correctly optioned **ADU**.

Reference: DLP-512

13. Wait 20 seconds and then replace **LSU** with the **LSU** removed previously while observing **FAIL** indicator on **LSU** faceplate.

14. Did **FAIL** indicator on **LSU** light momentarily and go off?

    If **YES,** then **STOP. YOU HAVE COMPLETED THIS PROCEDURE.**
    If **NO,** then continue with Step **15.**

15. Replace **ADU** with **ADU** removed previously.

16. Check wiring using SD-7C117-01 or SD-7C117-02. Repeat procedure from Step **3** after locating and correcting trouble.

# Test Alarm System for Power Minor and Fan Alarms

1.

**CAUTION:**
*System must be out of service to perform test; otherwise, service will be interrupted. If dual channel bank is already providing service, RT batteries must be fully charged before test is started; otherwise, service may be interrupted on the working bank while alarms are being tested.*

Consult office records and verify that needed jumpers for central office and remote alarm points have been made at main distributing frame.

2.

**NOTE:**
This procedure should only be performed if the –48V DC power shelf (or bulk power plant) is equipped with fully charged batteries.

At RT interrupt AC power by turning off AC circuit breaker to the power shelf (see label on inside door for cabinets), or unplugging the AC power cord plug from outlet.

Response: At *5ESS* switch MCC IDCU RT Page 188YZZ,X for 5E9(1) generic or Page 1880,Y,ZZ,X for 5E9(2) generic (where Y=IDCU, ZZ=TR303 RT number, X=SM number) **POWER** and **MINOR** alarm messages appear after about 4 minutes.

At RT, **ADU** indicator **NE** and **BCU** indicator **PMN** light after about 4 minutes (both banks).

3. At RT, restore AC power by turning circuit breaker on or plugging power cord into AC outlet.

Response: Alarms clear after about 1 minute.

4.

**NOTE:**
If fans are running, it will be necessary to remove power to the fans by unplugging J114 to fan assembly before obstructing fan blade. The power should be restored before testing the fan alarm. The **4( )** type fans can be stopped by pressing the **LED TEST/CHANGE FAN SPEED** pushbutton.

When fans are not running at the RT, insert an obstruction (screwdriver, pencil, etc, not your finger) between the fan blades. Start fans by depressing and holding the **FAN TEST** pushbutton on the fan control unit (**FCU**) or **4( )** Cooling Shelf **LED TEST/CHANGE FAN SPEED** pushbutton.

Response: At *5ESS* switch MCC IDCU RT Page 188YZZ,X for 5E9(1) generic or Page 1880,Y,ZZ,X for 5E9(2) generic (where Y=IDCU, ZZ=TR303 RT number, X=SM number) **MINOR** alarm message appears after about 30 seconds.

At RT, **ADU** indicators **MN** and **NE** light after about 30 seconds.

5. Remove fan blade obstruction. Then disconnect and reconnect J114 fan power plug to reset the alarm in the **2A** fan.

Response: Alarms clear after 30 seconds.

**STOP. YOU HAVE COMPLETED THIS PROCEDURE.**

# Test Remote Miscellaneous Alarm (If Provided)

1. Is **MISC1** alarm assigned at the RT?

   If **YES,** then continue with Step **2.**
   If **NO,** then **STOP. YOU HAVE COMPLETED THIS PROCEDURE.**

2. At RT, operate **MISC1** alarm.

   Response: At *5ESS* switch MCC IDCU RT Page 188YZZ,X for 5E9(1) generic or Page 1880,Y,ZZ,X for 5E9(2) generic (where Y=IDCU, ZZ=TR303 RT number, X=SM number) **ENV1** and **MINOR** or **MAJOR** (depending on **ADU S1-7** setting) alarm messages appear after about 30 seconds.

   At RT, **BCU** indicator **MISC1** and **ADU** indicators **MJ** or **MN** (depending on **ADU S1-7** setting) light after about 30 seconds.

3. At RT, cancel **MISC1** alarms.

   Response: All alarms clear.

4. Is **MISC2** alarm assigned at the RT?

   If **YES,** then continue with Step **5.**
   If **NO,** then **STOP. YOU HAVE COMPLETED THIS PROCEDURE.**

5. At RT, operate **MISC2** alarm.

   Response: At *5ESS* switch MCC IDCU RT Page 188YZZ,X for 5E9(1) generic or Page 1880,Y,ZZ,X for 5E9(2) generic (where Y=IDCU, ZZ=TR303 RT number, X=SM number) **ENV2** and **MINOR** or **MAJOR** (depending on **ADU S1-8** setting) alarm messages appear after about 30 seconds.

   At RT, **BCU** indicator **MISC2** and **ADU** indicators **MJ** or **MN** (depending on **ADU S1-8** setting) light after about 30 seconds.

6. At RT, cancel **MISC2** alarms.

   Response: All alarms clear.

**STOP. YOU HAVE COMPLETED THIS PROCEDURE.**

# Test Single-Party POTS Channel End to End (IDCU to Series 5 RT)

**SUMMARY:** At RT, locate in both the AB and CD shelves a single-party channel to test. At IDCU, determine corresponding channel and directory number of channel. At RT, connect a test telephone set connected for bridged ringing to channel being tested. Make talking, dialing, ringing, and ring-trip tests on the channel.

1. Obtain Support Apparatus listed:
   - DMM (digital multimeter) with an accuracy of 1.0% and and AC/DC impedance of ≥ 1 megohm.
   - 500-type telephone set or 1015B dial hand set (Butt set).
   - **AUA58B** or similar single party *SLC* Series 5 RT channel unit.
   - ITT RTG16L2H15A channel unit faceplate test cord (COMCODE 405755208).
2. Establish communication between RT and IDCU personnel.
3. 

   **NOTE:**
   These test procedures are to be performed on one channel in the AB and CD shelves.

   Pull the protector unit for the customer drop corresponding to the channel to be tested.
4. 

   **NOTE:**
   Test telephone set should be connected for bridged ringing.

   Install the channel unit faceplate test cord plug into the channel unit faceplate jack. Connect the other end of the test cord to a test telephone set.
5. At RT, lift handset and check for dial tone.

6. Is dial tone present at RT?

   If **YES,** then proceed to Step **10.**
   If **NO,** then continue with Step **7.**

7. Request IDCU personnel review line assignment to ensure correct test number. If line assignment is correct, check test connections at RT and correct if needed. If dial tone is still not present, replace RT channel unit and check for dial tone.

8. Is dial tone present at RT?

   If **YES,** then proceed to Step **10.**
   If **NO,** then continue with Step **9.**

9. At RT, use SD-7C118-01 to check channel bank wiring. Look for tip and ring reversal between RT and cross-connect terminal. Correct wiring and repeat Step **8.**

10. At RT, dial local test number and make normal talk tests.

11. Was call completed with normal transmission quality in both directions?

    If **YES,** then proceed to Step **15.**
    If **NO,** then continue with Step **12.**

12. Replace RT channel unit and repeat normal talk tests.

13. Was call completed with normal transmission quality in both directions?

    If **YES,** then proceed to Step **15.**
    If **NO,** then continue with Step **14.**

14. At RT, use SD-7C118-01 to check wiring. Check for tip and ring reversal between RT and cross-connect terminal. Correct wiring and repeat Step **13**.

15. At CO, dial test line number to ring telephone at RT.

16. At RT does test telephone ring normally?

    If **YES,** then proceed to Step **20.**
    If **NO,** then continue with Step **17.**

17. Has tip and ring reversal been checked?

    If **YES,** then continue with Step **18.**
    If **NO,** then proceed to Step **19.**

18. Replace RT channel unit and repeat this procedure from Step **5.**

19. At RT, look for tip and ring reversal and repeat from Step **15.**

20. At RT, lift telephone handset during ringing.

21. At RT, does ringing trip normally?

    If **YES,** then proceed to Step **23.**
    If **NO,** then continue with Step **22.**

22. Replace RT channel unit and repeat this procedure from Step **5**.

23. Is this the last designated channel to be tested?

    If **YES,** then continue with Step **24.**
    If **NO,** then proceed to Step **3.**

24. Is TBCU (test bus control unit) available for use in testing channels?

    If **NO,** then proceed to Step **33.**
    If **YES,** then continue with Step **25.**

25. Request that Repair Service Bureau or Local Test Desk perform necessary channel tests using TBCU.

26. Did tests pass?

    If **YES,** then proceed to Step **32.**
    If **NO,** then continue with Step **27.**

27. Check test connections and correct if needed. If connections are correct, replace RT channel unit. Repeat Step **25** and continue with Step **28.**

28. Did tests pass?

    If **YES,** then proceed to Step **32.**
    If **NO,** then continue with Step **29.**

29. Make sure TBCU is working properly and that you are using proper procedures. Repeat Step **25** and continue with Step **30.**

30. Did tests pass?

    If **YES,** then proceed to Step **32.**
    If **NO,** then continue with Step **31.**

31. Use RT schematic drawing SD-7C118-01 to check wiring. Check for tip and ring reversal between RT and cross-connect terminal. Correct wiring problem and repeat Step **25** until tests pass and continue with Step **32.**

32. Is this the last designated channel to be tested with TBCU?

    If **YES,** then continue with Step **33.**
    If **NO,** then proceed to Step **25.**

33. At RT, remove test telephone and reinstall the protector unit for the customer drop.

    **STOP. YOU HAVE COMPLETED THIS PROCEDURE.**

# Install Alarm Display Unit in FPB Optioned for Preservice and Unequipped

1. On **AUB27( )** option switch **S1** (Table A and Figure 1), use an orange stick (KS-6320, L1) or equivalent and set switch positions as follows:
   - **1** - Toward **PL** if equipping system with protection switching. Otherwise, toward **NPL**.
   - **2** - Toward **2** if the FPB system was Mode 2. Otherwise, toward **4**.
   - **3** - Toward **ABP**.
   - **4** - Toward **CDP**.
   - **5** - Toward **ABU**.
   - **6** - Toward **CDU**.
   - **7** - Toward **1MJ** if **MISC1** is to report a major alarm or toward **1MN** if **MISC1** is to report a minor alarm.
   - **8** - Toward **2MJ** if **MISC2** is to report a major alarm or toward **2MN** if **MISC2** is to report a minor alarm.

| **Table A**<br>**AUB27( ) Switch Setting** | | |
|---|---|---|
| **S1 Switch** | | |
| No Protection Line (***NPL***) | 1 | Protection Line (***PL***) |
| Mode 2 Operation (***2***) | 2 | Mode 1 Operation (***4***) |
| AB In-Service (***ABI***) | 3 | AB Preservice (***ABP***) |
| CD In-Service (***CDI***) | 4 | CD Preservice (***CDP***) |
| AB Equipped (***ABE***) | 5 | AB Unequipped (***ABU***) |
| CD Equipped (***CDE***) | 6 | CD Unequipped (***CDU***) |
| Major Alarm for MISC1 (***1MJ***) | 7 | Minor Alarm for MISC1 (***1MN***) |
| Major Alarm for MISC2 (***2MJ***) | 8 | Minor Alarm for MISC2 (***2MN***) |
| **S2 Switch** | | |
| ***16*** | 1 | Use ***13*** |
| Use ***FS*** | 2 | ***FE*** |
| Use ***NC*** | 3 | ***CUT*** |
| ***SGL*** | 4 | Use ***DBL*** |
| ***PA*** | 5 | Use ***NPA*** |
| ***MJP*** | 6 | Use ***MNP*** |
| Not Used | 7 | Not Used |
| Not Used | 8 | Not Used |
| **S3 Switch** | | |
| Use ***DL*** | | ***NDL*** |
| **CLEAR/NORM Plug** | | |
| Clear Provisioning<br>(Use ***CLEAR*** When ADU is first installed in a new system) | | Do Not Clear Provisioning<br>(Use ***NORM*** for In-Service System) |
| **S4, S5, S6, and S7 Rotary Switches** | | |
| System ID Number | | |
| **S8, S9, S10, and S11 Rotary Switches** | | |
| Unused (Set to 0) | | |

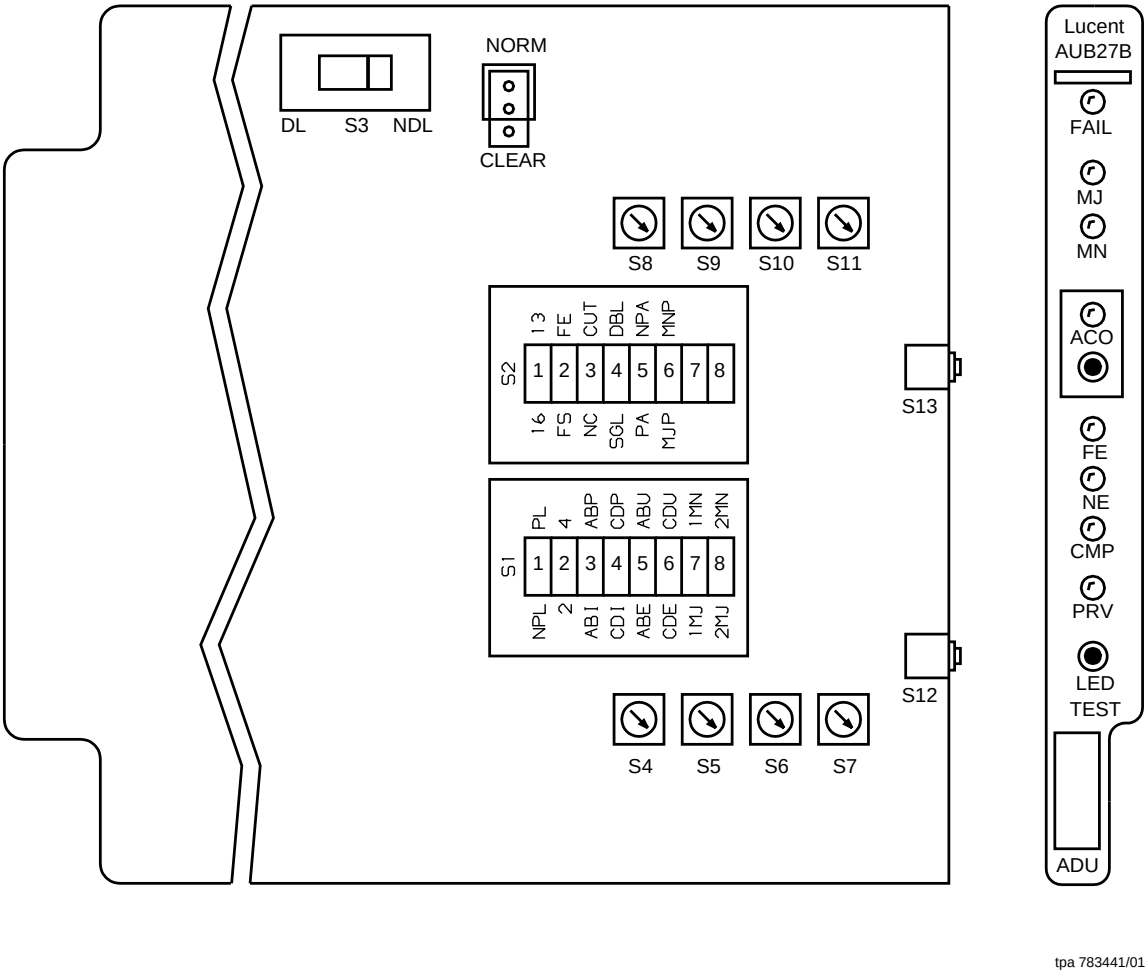


**Figure 1 – AUB27( ) RT ADU Option Switch Settings**

2. On **AUB27( ) ADU** option switch **S2** (Table A and Figure 1), use an orange stick (KS-6320) or equivalent and set switches as follows:
   - **1** - Toward **13**.
   - **2** - Toward **FS**.
   - **3** - Toward **NC**.
   - **4** - Toward **DBL**.
   - **5** - Toward **NPA**.

- **6** - Toward **MNP**.
- **7** - Not used.
- **8** - Not used.

3. Set switch **S3** toward **DL**.

4. Set system identification rotary switches **S4** (most significant digit) through **S7** (least significant digit) to bank ID number.

5. Rotary switches **S8** through **S11** are unused (set to 0).

6.

**NOTE:**
The **NORM/CLEAR** switch option is used to automatically clear random channel provisioning data stored in the **ADU** and **BCU**.

Set **NORM/CLEAR** option plug for **CLEAR** option (AUB27( ) center and bottom pins).

7.

**CAUTION:**
*Incorrectly set **ADU** option switches may result in immediate or future loss of service or may introduce errors into the digital bitstream.*

Insert **ADU** into lower **ADU** slot if equipping blue bank or upper **ADU** slot if equipping white bank. Disregard all alarms.

**STOP. YOU HAVE COMPLETED THIS PROCEDURE.**

# Verify Correct Complement of Circuit Packs for FP303

1. Refer to Table A to determine the required number and complement of circuit packs for feature package 303 (FP303).

2. Are all required packs available?

   If **YES**, then **STOP. YOU HAVE COMPLETED THIS PROCEDURE.**
   If **NO**, then obtain missing packs.

**TABLE A**
**FP303 COMMON UNIT COMPATIBILITY**

| Unit Code | Function Code | Requirements |
|---|---|---|
| BCU | MC97796A1 | One BCU for each system (blue and white). |
| ADU | AUB27B | One ADU for each system (blue and white). |
| TRU | AUA112B | One TRU for each dual digroup shelf (two for each system); one 993A TRU cable to connect TRUs. |
| LIU | AUA61C, D, E or F<br>AUA62C, D, E or F<br>AUA64C, D, E or F | One LIU for each equipped DS1; choose among unit codes. |
| LSU | AUA74 | One LSU for each system with DS1 protection switching. |
| CTU | AUB22<br>AUB25 | One CTU for each dual channel bank; choose between unit codes. |
| PCU | AUA11( ) | One PCU for each shelf of the dual channel bank. |
| CFU | AUA114<br>39E | One CFU for each system; choose between unit codes. |
| LFU | AUA115<br>39F | One LFU for each dual channel bank if equipped with AUA62C or D LIUs; choose between unit codes. |
| FCU | AUA24 | One FCU is required for each system if a 2-fan unit is installed. |

**NOTE:**
CMIP-91 BCU and TRUs are backward compatible in the 5ESS switch, i.e., any one of these cards can work with CMIP-89 cards.