Copyright © 2006 Lucent Technologies

DIV. 1: GENERAL INFORMATION

Copyright © 2006 Lucent Technologies

SEC. 1: ORDERING INFORMATION

1. HOW TO ORDER THE TG-5

The TG-5 (5ESS Switch Translation Guide; 235-080-100) can be ordered either through your technical information resource manager or technical documentation coordinator, or by calling the Lucent Technologies CIC (Customer Information Center) at 1-888-LUCENT-8 (1-888-582-3688) in Indianapolis, Indiana. One contact number is used to access all 5ESS Switch product information. You will be prompted to the appropriate option. You may also access product information using the Internet: www.cic.lucent.com.

The CIC service representative taking the order will request the following information:

- The type of order. The type of order can be a standing order or a one-time order. A one-time order means you will receive the current TG-5. A standing order means you will receive the current TG-5 and the monthly updates to the TG-5. If you choose a standing order, then you will keep your TG-5 current.
- A purchase order number or a credit card number. (Lucent Technologies employees should use their department number.) A purchase order number can be obtained from your purchasing organization. If you keep a record of your purchase order number and use it to make changes to your order or cancel your order, it will help the CIC service representative make these changes quickly and easily.
- An address where you want to receive the TG-5 and the TG-5 monthly update shipments.
- A contact person whom the CIC service representative can contact about the order.

1.1 HOW TO ORDER NEW BINDERS

If you need to replace worn TG-5 binders, you can order new binders for the TG-5 through your CIC regional service representative, or by calling the CIC service representative.

1.2 ELECTRONIC MEDIA DOCUMENTATION

The TG-5 is also available on CD-ROM and on-line documentation. If you wish to receive electronic media or electronic dial-up service, call the CIC.

2. HOW TO CANCEL OR CHANGE AN ORDER

To cancel or change your order, contact your technical information resource manager or technical documentation coordinator, or call the CIC. It will help the CIC service representative to expedite the changes if you know your original purchase order number.

3. HOW TO SCHEDULE TRAINING FOR TRANSLATIONS

Lucent Technologies offers courses in 5ESS Switch translations. To obtain information on these courses or to schedule a course, call the CIC.

Copyright © 2006 Lucent Technologies

SEC. 2: 5000 RECORD TRANSLATION INQUIRY

1. GENERAL

Your feedback is important to us. The TI (Translation Inquiry) form (5000 Record) is provided for your convenience to give feedback relating to the TG-5 (5ESS Switch Translation Guide). This inquiry may deal with problems in using translation forms or difficulties in interpreting translation information in the TG-5. The translation inquiry may also be used for suggestions and proposals relating to Translation Guide contents or arrangement.

NOTE: Forwarding translations for review is not an appropriate use of the feedback form. In addition, requests for feature or option development should not be submitted as an inquiry. This type of correspondence should be directed to Lucent Technologies through your normal channels.

2. THE TRANSLATION INQUIRY

A reproducible copy of the TI is located in Division 19 of this Guide. This master should be reproduced locally to provide feedback forms for TG-5 questions and proposals.

Please FAX the completed TI to:
J. Broyles
FAX number 630-224-1314

Or, mail the completed TI to:
J. Broyles - Room 7G-318
Lucent Technologies
1960 Lucent Lane
Naperville, IL 60566-7217

Or, email your comments to:
jannbroyles@lucent.com

When the TI (Translation Inquiry) form is received by the TG-5 group, an inquiry number is assigned to that TI and the TI is assigned to a TG-5 writer. The writer will contact the originator of the TI, usually within ten working days. When the research on the inquiry has been completed, the writer will answer the inquiry and notify the originator of the schedule for publication for this information in the TG-5.

The TI is divided into two basic areas (see Figure 1). Block A is for basic reference information, Block B is for problem description or proposal.

Block A: Reference Information - Enter the division, section number, and the publication date that appears in the heading of the TG-5 section. If the inquiry relates to a specific Software Release, for example 5E10, please enter the Software Release number.

Block B: Problem or Proposal Description - This block is used to fully describe the problem or proposal. Please reference the division and section, if different from Block A, and the paragraph or figure number. The

Copyright © 2006 Lucent Technologies

reverse side of the form may be used if additional space is required.

Please include your name, company affiliation, address, and telephone number.

5000 (1/2000) RECORD

TRANSLATION INQUIRY

5ESS SWITCH
INQUIRY NUMBER _____
(LUCENT USE ONLY) Office

A. REFERENCE INFORMATION

Division___ Section_____

TG-5 Publication Date_____

Name_____

Title_____

Telephone Co._____

Telephone Number (____)_____

Address_____

City_____ State_____

ZIP Code_____

B. PROBLEM PROPOSAL DESCRIPTION

Enter the problem or proposal description and example as appropriate. Use reverse side of this sheet if necessary. Please give detailed description including date, page, paragraph, or figure referenced.

Copyright © 2006 Lucent Technologies

FAX TI to J. Broyles

FAX Number: 630-713-4613

Or send completed copy to:

J. Broyles

Lucent Technologies

1960 Lucent Lane

Naperville, IL 60566-7217

Or, email your comments to:

jannbroyles@lucent.com

Copyright © 2006 Lucent Technologies

SEC. 3: INTRODUCTION TO THE TG-5

1. GENERAL

The purpose of the TG-5 (5ESS Switch Translation Guide) is to enable the user to correctly populate ODD (Office Dependent Data). Office Dependent Data is initiated and maintained by the 5ODA (5ESS Switch Office Data Administration) system. In the 5ODA environment, the term "translations" refers to the office dependent data which supports the 5ESS Switch and its software. In addition to many other capabilities, this data provides the 5ESS Switch with the capability to analyze the dialed digits, route the call, and charge the subscriber.

The contents of the TG-5 are designed to help you use 5ODA to populate ODD and to help you ensure an error-free database. The information presented in the TG-5 is organized into chapters and subchapters called Divisions and Sections. The following is a high-level overview of the current Divisions and Sections.

- DIVISION 0 - Provides a table of contents and cross-reference information including identification of all input forms, records, Recent Change Views, and references as to where this information can befound in the TG-5.
- DIVISION 1 - Provides general information on the 5ESS Switch and related software tools, glossary of terms, and instructions for using the TG-5.
- DIVISION 2 - Provides a discussion of how to provision the 5ESS Switch features including Maintenance and Testing Feature Requirements, Operator Services Position System Features, Special Features including Secured and Transparency features, Data Services features, Equipment features, Wireless features, and SM-2000 features.
- DIVISIONS 3, 4, 5, 6, 7, 8 - Provide a detailed discussion of ODA forms including field descriptions, data requirements, and associated integrity checks. Also included are SAMPLE RECORDS for specifying translation data and SAMPLE FORMS providing instructions for data entry into 5ODA.
- DIVISION 9 - Provides a detailed discussion for provisioning CNI (Common Network Interface) Recent Change views.
- DIVISION 11 - Provides a high-level overview of the data difference between 5ESS Switch Software Releases.
- DIVISION 19 - Provides a full set of 5ODA REPRODUCIBLE RECORDS. The reproducible records are blank sample records which are provided to facilitate data entry.
- DIVISION 20 - Provides an overview of the changes in the TG-5 for each monthly update.

A more detailed discussion of the contents of each Division and Section is presented below in paragraph 4 - ORGANIZATION OF THIS GUIDE.

1.1 5ODA and Recent Change

The TG-5 is written as a support document for the 5ODA. Thus, the TG-5 is designed to provide information necessary to accomplish

1. the establishment of a new 5ESS Switch,
2. an in-service 5ESS Switch undergoing a retrofit procedure,

Copyright © 2006 Lucent Technologies

3. or an in-service 5ESS Switch undergoing a large terminal growth procedure.

These events are distinguished from the Recent Change function. However, because of the extensive information maintained by the TG-5, it is an excellent reference to support Recent Change activities. Nonetheless, the Recent Change Manual should be used as the dominant source for Recent Change information.

1.2 TG-5 Updates

Much of the information in the TG-5 is subject to change. Update packages that contain additional information or changes to the TG-5 are issued monthly. If you are on standing order for the TG-5 (see Division 1, Section 1 on how to order the TG-5), you will receive the paper update package or the electronic media update package.

1.3 Change Indications

The latest changes to a TG-5 section are indicated by shaded text (or by a " | " in the right margin for earlier releases of the documentation). The date a section has been changed is listed in the heading for each section.

1.4 Your Feedback

We want your feedback. In using the TG-5, you may occasionally uncover aspects of data entry that are not covered in the documentation. The Translation Inquiry (Division 1, Section 2) describes the procedure for forwarding questions, requests and other comments regarding discrepancies between translation processes and the TG-5. The Translation Inquiry is a valuable tool for obtaining a quick response to requests for clarification of translations information.

2. 5ODA FORM PREPARATION/DATA ENTRY

The 5ODA (5ESS Switch Office Data Administration) system is the set of software tools that initiates the office dependent database for a 5ESS Switch. The 5ODA system provides the following:

- Both interactive data and bulk data entry capabilities for entering and correcting 5ESS Switch translations data.
- A data verification capability for checking errors in the 5ESS Switch translations data.
- The capability to generate Office Records (output reports) from the 5ESS Switch translations data.
- The capability to map the 5ESS Switch translation data into the data structures that are subsequently loaded into the 5ESS Switch.

The 5ODA form is composed of many data items known as fields. The first field(s) on a form is always a "key" field(s). The "key" field uniquely identifies each form and its associated data. The "key" field is designated on each form and in the text with an asterisk (*) and must always be defined.

A data item may be specified as a "rollover" field. That is, whatever value was entered in the field on the previous form will be automatically repeated on all subsequent forms until the rollover is cancelled.

A required field is a field that must have a value entered on the form. Required fields are designated by a "#",

Copyright © 2006 Lucent Technologies

unless it has a default value.

Each 5ODA form has predefined values entered in some fields - these are known as "default" values. Default values are listed in the text after each field. If the "default" value is not the desired entry, you may change it.

All fields are numbered and appear on the form in ascending, but not always consecutive, order.

The above information is provided in Divisions 3, 4, 5, 6, 7, 8, and 9 of this guide. Each section begins with a short general description of the corresponding 5ODA input form. In addition, the general section lists any peculiarities of the form and any possible hazards in using the form. In the "FORM ENTRIES" subsection, each field on the form is discussed in a specific paragraph. The field definition and its valid entries are included.

An example of a 5ODA input form is shown as a figure at the end of each division's section. An example of an Office Record is similarly provided.

REPRODUCIBLE RECORDS are provided in Division 19.

3. HOW TO READ THIS GUIDE

If this is your first introduction to the TG-5, you will want to read Division 1 to familiarize yourself with the contents of the TG-5 and how to use 5ODA. Refer to the Index at the front of Division 1 to find the sections containing the information that you need.

If you are already familiar with the TG-5, but need to find where the information you desire is located within the guide, refer to the following:

- Division 0, Section 0, which contains the Table of Contents for each division of the TG.
- Division 0, Section 1 which contains the 5ESS Switch Form versus Text Cross Reference Table.
- Division 0, Section 2, which gives the ODA form vs Recent Change view cross reference.
- Division 0, Section 3, which gives the Recent Change view vs the ODA form.
- Division 0, Section 4, which gives the Office Record number vs ODA form and Recent Change view.
- In addition, each division has an index at the beginning of the division and sections.

4. ORGANIZATION OF THIS GUIDE

The TG-5 is organized by divisions, sections and subsections. Each division may contain multiple tables of contents within a division. The first is a table of contents of the division (always Section 0), followed by a separate table of contents for the sections within that division, numbered consecutively.

The following paragraphs provide a brief description of each of the divisions.

4.1 Division 0 - Table of Contents

Division 0 provides the Table of Contents for the TG-5 in addition to cross reference information. It is divided into the following sections:

Section 0 - Table of Contents for all Divisions of the TG-5.

Copyright © 2006 Lucent Technologies

Section 1 - 5ODA Form Name Cross Reference

Section 2 - ODA Forms vs Recent Change Views Cross Reference

Section 3 - Recent Change Views vs ODA Forms Cross Reference

Section 4 - Office Record Number vs ODA Forms / Recent Change Views

4.2 Division 1 - General Information

This division provides an introduction to the 5ESS Switch and the TG-5. It is divided into the following sections:

Section O - Table of Contents for Division 1.

Section 1 - Ordering Information.

This section outlines how to order the TG-5.

Section 2 - Translation Inquiries.

This section explains how to submit questions and comments relating to 5ESS Switch translations and the TG-5. A reproducible copy of the Translation Inquiry (Record 5000) is included in Division 19.

Section 3 - Introduction to the TG-5.

This section covers the function, purpose and arrangement of this guide.

Section 6 - Glossary of Terms.

This section contains an alphabetical listing of terms associated with the 5ESS Switch. Each term is defined within the context of its use in the system. The glossary includes terms associated with 5ODA and Recent Change.

Section 7 - 5ESS Switch Office Data Administration (5ODA) User's Guide.

This section provides detailed information on how to use the 5ODA system to input ODD.

Section 8 - Establishing an Office Data File (5001).

This section describes how to set up the identification, accounting and tracking information that is needed to set up the data base for each 5ESS Switch.

Section 9 - 5ODA Batch Load Interface.

This section provides information on how to merge batch data from existing mechanized systems with the appropriate 5ODA data.

Section 10 - Routing and Charging.

This section provides an overview of routing and charging.

Section 11 - 5ECONV User's Manual.

This section describes the process that converts 1ESS Switch and 1A ESS Switch office subscriber data to

Copyright © 2006 Lucent Technologies

5ODA data.

Sections 12 and 13 - Growth and Retrofit Plans

These sections describe the 5ODA off-line large terminal growth and retrofit plans.

4.3 Division 2 - Features

This division provides a high-level description of each translation feature. The explanation is followed by the translation requirements that are necessary to implement the feature.

Section 1 - General Features

Section 2 - Maintenance and Testing Feature Requirements

Section 3 - Operator Services Position Systems Features

Section 4 - Special Features including Secured and Transparency Features

Section 5 - Data Services Features

Section 6 - ISDN PRI (Primary Rate Interface) Features

Section 7 - Equipment Features

Section 8 - Wireless Features

Section 9 - SM-2000 Features

4.4 Division 3 - Translation Administration

This division describes office Records and 5ODA input forms used by the switch owner for general telephone service (i.e., POTS). Division 3 is divided into the following sections:

Section 0 - Index for Division 3.

Section 1 - Line Forms.

Section 2 - Trunk Forms.

Section 3 - Routing and Charging Forms.

Section 4 - Operator Services Position System (OSPS) (5E4(2) and later Software Releases).

Section 5 - Miscellaneous Forms.

Section 6 - Secured Features.

4.5 Division 4 - BRCS (Business and Residence Custom Services)

This division contains instructions for BRCS Office Records and 5ODA input forms (see Division 6 for ISDN BRCS).

4.6 Division 5 - ISDN (Integrated Services Digital Network) Line and Packet Switching

Copyright © 2006 Lucent Technologies

Section 1 - ISDN Lines.

Section 3 - Packet Switching

Section 5 - ISDN Miscellaneous Forms.

4.7 Division 6 - ISDN BRCS

This division contains instructions for the Office Records and 5ODA input forms to build ISDN BRCS features.

4.8 Division 7 - Digital Cellular Switching

This division contains the instructions for the Office Records and 5ODA input forms to build Digital Cellular switching on a 5ESS Switch.

4.9 Division 8 - Engineering Assignments

This division contains instructions for all 5ODA input forms used to install and maintain a 5ESS Switch.

4.10 Division 9 - CCS (Common Channel Signaling)

This division contains information needed to implement CNI (Common Network Interface) translations via Recent Change input views.

4.11 Division 11 - Software Differences

This division provides an overview of the data differences between various combinations of 5ESS Switch Software Releases. The information in this section is intended to be high-level reference to new features in a specific Software Release. The differences are described from an ODA point of view.

4.12 Division 19 - Reproducible Records

This division contains a master copy to reproduce all Office Records available for the 5ESS Switch.

Section 1 contains the alphabetical listing of all Office Records with the record number, form designation and the division and section that provide the instructions for that Office Record.

4.13 Division 20 - Monthly Update Summary of Changes

This division provides a summary of the changes for each monthly update of the TG-5.

Copyright © 2006 Lucent Technologies

SEC. 6: GLOSSARY OF TERMS

1. GENERAL

This section has been included to assist the user in interpreting words, acronyms, and abbreviations commonly used throughout the Translation Guide.

2. ALPHANUMERIC LISTING OF TERMS

Term	Definition
2500 SET	A non-ADSI (Analog Service Display Interface) compatible analog telephone set, capable of manually signaling a flash and signaling DTMF (Dual Tone Multifrequency) digits. It is a standard analog residential set. It may have the ability to display the name and/or number of the calling party in the on-hook mode, but does not have the ability to display the name and/or number of the calling party in the off-hook mode.
5ECONV	5ECONV is a system that provides a mechanized process to convert 1A ESS Switch and 1ESS Switch office subscriber data to the appropriate 5ODA input.
ADSI SET	An analog telephone set capable of recognizing the CAS (CPE (Customer Premise Equipment) Alterting Signal) which is a special dual tone. Reception of a CAS signal activates a program in the set's firmware which provides a multi-page menu of call management options that the subscriber may use at various states of the call. The subscriber chooses the action desired via soft keys assigned to the displayed options. The action associated with the soft keys changes as the menu page changes. The ADSI set is also capable of displaying the name and/or number of the calling party.
ALTERNATE ROUTING	Available for each PSAP, Alternate Routing is used to route calls to a predesignated location for a traffic busy PSAP, a PSAP on night duty or a PSAP experiencing a power failure.
ANALOG INTERFACE UNIT (AIU)	Any of the various Interface units interfacing analog facilities. These include the Line Unit (LU), and the Trunk Unit (TU).
AUTOMATIC IDENTIFIED OUTWARD DIALING (AIOD)	A trunk group that connects a Centrex-CU to a switching machine to identify outward dialed calls by the line number of the originating station.
AUTOMATIC LINE INSULATION TEST (ALIT)	An automatic test system which checks for foreign EMF and leakage on a customer loop.
AUTOMATIC MESSAGE ACCOUNTING RECORDING CENTER (AMARC)	A centralized system which keeps a record of all billing and Automatic Message Accounting messages for ESS offices.
BUSINESS AND RESIDENCE CUSTOM SERVICES (BRCS)	BRCS are a large set of business and residence service features that are typically called "centrex". BRCS allows substantial flexibility in the way the features are constructed. BRCS feature packages can be preconstructed, customized, or clustered.
CAC	Carrier Access Code is the 5-digit prefix 10XXX where XXX is the 3-digit CIC (Carrier Identification Code). A new CIC expansion feature was introduced in 5E9(1) that increased the CAC to 7-digit prefix (i.e. 101XXXX) with 4-digit carrier codes.
CAMA PSAP	A PSAP that has CPE (Customer Premises Equipment) which can provide the attendant with the caller's ANI via CAMA-like signaling. The CAMA PSAP allows the attendant to use Enhanced 911 features such as Selective Transfer.
CAMA-LIKE SIGNALING	Analog trunks with MF signaling using CAMA ANI format. This is the signaling used between the E911 serving office and a CAMA PSAP. This signaling is one-way, from the 5ESS Switch to the CAMA PSAP.
CAMA SIGNALING	Centralized Automatic Message Accounting Signaling. A signaling scheme normally used to transmit ANI (Automatic Number Identification) information from a local switch not equipped for AMA recording to another switch capable of AMA recording. This type of signaling is commonly used between the end office and the E911 tandem office, although CCS7-ISUP trunks and direct seizure trunks may also

Copyright © 2006 Lucent Technologies

	be used. CAMA signaling has been adapted for E911 use to forward the caller's directory number to the PSAP.
CAS	CAS (CPE Alterting Signal) is a dual tone sent to the ADSI CPE to "wake it up" that an ADSI call is coming in. Currently implemented by CIDCW (Calling Identity Delivery With Call Waiting) and also used with CWD (call Waiting Deluxe).
CENTRALIZED AUTOMATIC MESSAGE ACCOUNTING (CAMA)	A trunk group which carries customer dialed 7- or 10- digit toll calls to Centralized Automatic Message Accounting equipment where recording and timing of a connection are done automatically in addition to the switching function.
CENTRALIZED AUTOMATIC REPORTING ON TRUNKS (CAROT)	CAROT is a minicomputer based system that controls transmission and operational trunk tests for all exchanges in a particular area that are equipped with compatible Remote Office Test Lines (ROTL) and responders.
CENTRAL PROCESSOR (CP)	The Centralized processor of 5ESS which performs the part of call processing, administration, and maintenance which cannot be economically distributed to the Switching Modules.
COMMON CHANNEL INTEROFFICE SIGNALING (CCIS)	An interoffice signaling scheme in which address and supervision signaling for trunks is carried over a data network rather than over the associated trunk facility.
DATA BASE MANAGER (DBM)	A software subsystem which is responsible for the access and updating of all translation data.
DEFAULT ROUTING	Automatically routes a 911 call to a predesignated PSAP when the primary PSAP cannot be determined. The 5ESS Switch uses this data for non-ESA routing.
DIRECT SEIZURE TRUNK	A trunk which does not send dialed digits to the E911 serving office. ANI may or may not be received after the trunk is seized at the incoming end. Also called a Direct Connect Trunk.
DIGITAL FACILITY INTERFACE (DFI)	Circuitry in a Digital Line/Trunk Unit that terminates a single Digital Facility.
DIGITAL LINE/TRUNK UNIT (DLTU)	The equipment unit which interfaces digital (T1) trunks and digital loop carrier/concentrator systems.
DIGITAL SERVICE UNIT (DSU)	The equipment unit which performs the functions of Tone Decoding, Tone Generation, conferencing, and certain AC tests.
DIGROUP	The 24 channels in a digital carrier system.
DIRECTLY CONNECTED TEST UNIT (DCTU)	This unit is accessible by every Line and Trunk Unit and provides a number of facility tests which require metallic access to lines and trunks.
DUAL LINK INTERFACE (DLI)	The DLI provides a two-way interface between each switching module and the Time Multiplexed Switch.
ENGINEERING AND ADMINISTRATIVE DATA ACQUISITION SYSTEM (EADAS)	A traffic data collection system which provides the interface between an ESS office and the Total Network Data System.
ESA	E911 Service Adjunct. A processor, attached to the switch via a DSL link, that provides ANI to ESN translation for E911 Service.
ESN	Emergency Service Number. The emergency service number is a number that defines the set of emergency services, e.g., police, fire, hospital, within a particular district or zone.
ESCO	Emergency Service Central Office. A number to identify the originating office or calling area of the 911 caller. An ESCO may be assigned to trunk groups and to the dialing plans for local lines. It translates to a selective routing indicator, a default ESN, and an NPD.
FEATURE CONTROL (FC)	A software subsystem which sequences call processing actions at a hardware independent level.
FEDERAL CARD	A calling card issued to FTS 2000 customers.
FIXED TRANSFER	Allows a PSAP attendant to transfer a 911 call to a particular PSAP location by operating one key.
FOREIGN EXCHANGE LINES (FX)	Special customer-access lines permitting a phone physically located in an area served by one Central Office to have a Telephone Number that includes a different Central Office Code.
FTS ROUTING NUMBER	The number returned in the CAS card validation reply message and matches an OSPS internally stored FTS routing number. This number is used to route calls to the FTS private network.
GATED DIODE CROSSPOINT (GDX)	An analog crosspoint capable of withstanding the high voltage signals present on customer lines.
GSM	Global SMs are those SM/SM-2000 equipped with a SS7 PSU and terminating SS7

Copyright © 2006 Lucent Technologies

	signaling links . A VCDX only sm-2k, or up to 16 SM/SM-2Ks may be GSMs.
HIGH LEVEL SERVICE CIRCUIT (HLSC)	A generalized service circuit in the Line Units used to perform ringing and coin control functions.
HUNT-BUSY	A condition where the switch will not offer a call to a particular hunt terminal because the terminal is a busy, a switch-maintained limit on that terminal's capacity for handling calls would be exceeded, or the terminal is deemed unavailable for hunting even though the ISDN interface serving the hunt terminal may not be busy.
IC	Inter-LATA Carrier handles Inter-LATA calls dialed via the North American Numbering Plan, and may be allowed to handle Intra-LATA toll calls through the Intra-LATA PIC capability, or Intra-LATA local calls dialed with a CAC.
ICLATA	Inter-LATA Carrier's Intra-LATA Capability, also same as Intra-LATA PIC.
INPUT/OUTPUT PROCESSOR (IOP)	Provides interfaces to CRT, to hard copy printers, to magnetic tape drives, and a Master Control Center.
INTEGRATED SERVICES DIGITAL NETWORK (ISDN)	ISDN service gives the capability of switching both voice and data over the same line.
INTRA-LATA LOCAL CALLS	All Intra-LATA calls that are not defined to be Intra-LATA PIC/Intra-LATA Toll calls are referred to as Intra-LATA Local calls. These calls are carried by the LEC unless dialed with a CAC (Carrier Access Code) for an IC (Inter-LATA Carrier) with approval to carry Intra-LATA calls.
INTRA-LATA PIC	Inter-LATA Carrier's Intra-LATA Capability. Also, used synonymously with ICLATA and Intra-LATA toll.
INTRA-LATA PIC/Intra-LATA TOLL/TOLL Calls	Intra-LATA PIC or Intra-LATA Toll Calls are any Intra-LATA calls which are open to competition. Usually such calls are inter-switch and are not defined by the tariff as a Local Calling Area call or an EAS (Extended Area Service) call. The LEC defines which calls are Intra-LATA PIC/Intra-LATA Toll calls.
LATA	Local Access and Transport Area is a defined non-overlapping geographical area where an EAEO (Equal Access End Office) and/or AT (Access Tandem) can provide a carrier access to the local exchange.
LEC	Local Exchange Carrier, the Local Telephone Company that owns the switch, provides the local loop, and serves as the default carrier for Intra-LATA calls.
LINE UNIT (LU)	The part of the Switching Module which provides terminations for lines that are concentrated onto 64 Time Slots.
MAIN DISTRIBUTING FRAME (MDF)	A connection system that interfaces cable pairs and switching equipment.
MANUAL DIAL TRANSFER	Allows the PSAP attendant to manually dial the directory number of the destination.
MASTER CONTROL CENTER (MCC)	Provides the human-machine control interface for the 5ESS. It consists of a video display terminal with keyboard telephone set. The Trunk and Line Work Station is also part of the MCC.
MESSAGE SWITCH (MSGS)	The unit that provides for the transfer of call processing and administrative messages between the Switching Modules and the administrative processor, and between any two Switching Modules. The MSGS also contains the Message Switching and Clock Unit.
METALLIC SERVICE UNIT (MSU)	Provides metallic access, miscellaneous scanning and distributing functions, ALIT capabilities, and Gated Gated Diode Crosspoint composition in 5ESS.
MH	The MH (Message Handler) resides in an SM-2000 and provides for message transfer between an SM-2000 and the QLPS hardware.
MODULE CONTROLLER (MC)	An equipment grouping common to all Switching Modules. It consists of the Module Processor, the Signal Processor, the Time Slot Interchanger, and the Control Interface.
MODULE PROCESSOR (MP)	Part of the Module Controller, it consists of a microprocessor and its associated memory.
NCT	An NCT (Network Control and Timing) link has 256 time slots and runs at a rate of 32.768 Mb/s. The number of NCT links required can vary from two to four in groups of two (00 - 03).
NCT2	An NCT2 link has 512 time slots and runs at a rate of 65.536 Mb/s. The number of NCT2 links required can vary from two to twenty-four in groups of two (00 - 23).
NETWORK CONTROL AND TIMING (NCT) LINK	Connects an Switching Module to the Time Multiplexed Switch, provides Time Slot paths for network connections, carries a control Time Slot to the modules, and distributes timing to the module.

Copyright © 2006 Lucent Technologies

NLI	The NLI (Network Link Interface) manages the interfaces between an SM-2000 and the NCT2 links. They are optionally equipped in groups of two, from two to eight for Release 1. Each NLI provides for one NCT2 link connection.
NON-HUNT DN	A telephone number for a specific terminal within the hunt group. If a user calls the non-hunt DN, hunting is bypassed, and the call is offered only to the called terminal.
NPD	Numbering Plan Digit. First digit of ANI outpulsed to a CAMA PSAP; it represents the originating NPA of the call.
OFFICE DATA ADMINISTRATION (5ODA)	A Lucent Technologies program that builds the 5ESS Office Data Base.
ONTC	Office Network and Timing Complex, also known as the TMS.
OPERATIONAL SUPPORT SYSTEM (OSS)	Common support systems outside an ESS office developed by the BELL SYSTEM to assist the Operating Companies (e.g., AMARC, COSMOS, RMAS).
OPERATIONAL TEST	The ability to test the signaling capabilities of a trunk.
OPERATOR SERVICES POSITION SYSTEM (OSPS)	OSPS is a feature of the 5ESS Switch that provides operator services, such as, Directory Assistance (DA) and Toll and Assistance (T&A).
ORIGINATING CMC CALL/RECORD	A CMC Originating call is one that originates in or is received by the LEC network and is routed TO a CMC. CMC AMA records are made in the switch directly connected to the CMC Type 2A or Type 2B interface. Such CMC AMA records are called "Originating CMC" records but have Structure Codes (653/654) commonly associated with "Terminating IC" calls. This definition is based on Bellcore requirements GR-1504-CORE.
ORIGINATING WSP CALL/RECORD	A WSP originating call is one that originates in or is received by the LEC network and is routed to a WSP. WSP AMA records are in the switch directly connected to the WSP Type 1 interface. Such WSP AMA records are called "Originating WSP" records but have a Structure Code (653) commonly associated with "Terminating IC" calls.
PERIPHERAL CONTROL (PC)	A software subsystem which manages and controls the switching peripherals.
PERIPHERAL INTERFACE CONTROL BUS (PICB)	A duplex set of wires carrying control between the Module Controller and a Peripheral Unit of an Interface Module.
PERIPHERAL INTERFACE DATA BUS (PIDB)	A duplex set of wires carrying 32 time slots of data between the Module Controller and a Peripheral Unit of an Switching Module.
PIC	Presubscribed Inter-LATA Carrier, an IC which handles Inter-LATA calls dialed without a CAC. A PIC can be associated with a line and IDP (Individualized Dialing Plan) group or with the entire office.
PIPE	A pipe is a high bandwidth path for message transport between a QLPS QTMSLINK and a given QLPS endpoint (an MH in an SM-2000). It is a physical path capable of sustaining HDLC traffic from the QLPS, through the TMS, the NLI, the TSI and the APC, to the MH.
PSAP	Public Safety Answering Point. Location, or equipment at the location, where emergency attendants receive "911" call.
PTC	Presubscribed Intra-LATA Toll Carrier, an IC (or LEC) which handles Intra-LATA toll calls dialed without a CAC. A PTC can be associated with a line and IDP (Individualized Dialing Plan) group (CENTREX) or with the entire office.
QGL	
QGP	The QGP is an MSGS (Message Switch) subdevice that provides for message transport between the MSCU (Message Switch Control Unit) and QLPS hardware. None, one, or two QGPs may be equipped per MSGS, depending on office traffic characteristics.
QLI2	The QLI2 (Quad-Link Interface Model 2) circuit pack plugs into the CM2 (Communications Module Model 2) and provides the NCT2 interface between the CM2 and SM-2000. QLI2s plug into any existing QLI slot in the TMS except for the FLI (Foundation Link Interface) slot. CM2s equipped with QLI2s support both Single Fabric and Dual Fabric configurations.
QTMSLNK	A port connection on the QLPS board of the TMS. Each QLPS board has four QTMSLNKs.
REMOTE MEMORY ADMINISTRATION SYSTEM (RMAS)	RMAS is a multimicroprocessor system that increases the efficiency of centralized data base administration for all types of ESS's. It significantly reduces the time required to enter Recent Changes and to retrieve data, automates the production of

Copyright © 2006 Lucent Technologies

	office records, and provides reports that assist in managing both the data base and the personnel performing this work.
REMOTE SWITCHING MODULE (RSM)	Provides the capability of having a 5ESS Switching Module remotely located from the host 5ESS and its Administrative Module, and extends the ESS features and services to a remote group of customers outside the normal area of the 5ESS Central Office.
ROLLOVER FIELD	A data item on a form may be specified as a "Rollover" field, that is, whatever value was entered in the field on the previous form will be automatically repeated on all subsequent forms.
RSM STAND-ALONE CALL PROCESSING (SA)	Provides the capability for an RSM to continue limited call processing while in the Stand-Alone state.
SECURED FEATURES	The optional service features that require enabling the feature before it is operational.
SECURED FEATURE ADMINISTRATOR (SFA)	The person designated by the operating telephone company to perform the enabling of secured features.
SELECTIVE ROUTING	An E911 feature that selectively routes a 911 call to the primary PSAP associated with the originating station.
SELECTIVE TRANSFER	Allows a PSAP attendant to transfer a 911 call to the correct secondary PSAP for the caller's emergency service zone. The call is transferred based on the code sent by the PSAP and the telephone number stored in the ESN form.
SIGNAL PROCESSOR (SP)	The circuitry in the Switching Modules that detects signal changes on the channels.
SUBSCRIBER LOOP CARRIER - 96 (SLC-96)	The SLC System is a digital loop carrier pair gain system designed as a supplement or replacement for cable, and serves up to 96 subscribers at the remote site.
SWITCHING CONTROL CENTER SYSTEM (SCCS)	Provides facilities needed for efficient centralized maintenance of all types of Stored Program Control Electronic Switching Systems.
SWITCHING MODULE (SM)	The equipment grouping which provides line and trunk terminations, service circuits call processing functions and Time Division Switching.
TERMINATING CMC CALL/RECORD	A CMC Terminating call is one incoming FROM a CMC Type 2A or Type 2B interface, for completion in or via the LEC network. Such CMC AMA records are called "Terminating CMC" records but have Structure Codes (626/627) commonly associated with "Originating IC" calls. This definition is based on Bellcore requirements GR-1504-CORE.
TERMINATING WSP CALL/RECORD	A WSP Terminating call is one incoming from a WSP Type 1, for completion in or via the LEC network. Such WSP AMA records are called "Terminating WSP" records but have a Structure Code (625) commonly associated with "Originating IC" calls.
TIME DIVISION NETWORK (TDN)	The central network of the 5ESS. It includes the Time Slot Interchange, network Control and Timing Links, and the Time Multiplexed Switch.
TIME MULTIPLEXED SWITCH (TMS)	The Time Multiplexed Space Switch which connects NCT links together during specified Time Slots.
TIME SLOT (TS)	A unit of time during which a single sample of communication is sent throughout the 5ESS Network.
TIME SLOT INTERCHANGE (TSI)	The circuitry in the Switching Module which multiplexes the peripheral channel data to different Time Slots on the NCT links.
TRANSMISSION TEST FACILITY (TTF)	A service circuit which performs all voice-frequency transmission tests, (e.g., ROTL, 100 series test lines).
TRUNK AND LINE WORK STATION (TLWS)	Provides maintenance Personnel access to lines and an interface administration and supports portable testing equipment such as voltmeters and transmission measuring sets.
TRUNK UNIT (TU)	An analog interface unit which terminates loop and 4-wire trunks.
TYPE 1 INTER CONNECTION	Connection to a telephone company end office. It provides connections only to and from terminals served by that end office including lines, private trunks and other WSPs having terminations within the switch itself. These restrictions are provided only through digit analysis data in the switch, since the specific restrictions would be difficult to determine for every case.
TYPE 2A INTER-CONNECTION	Connectoins to a land based tandem switch, LT (Local Tandem) or AT (Access Tandem). Type 2A interconnections also provide connections to and from

Copyright © 2006 Lucent Technologies

	co-located lines in the tandem, inter-LATA carriers, and other CMCs having terminations within the LATA. This feature does NOT provide AMA billing support for the connections between CMC and a Local Tandem Switch.
TYPE 2B INTER-CONNECTION	Connectoins to a telephone company end office. It provides connections only to and from terminals served by that end office, including lines, private trunks and other CMCs having terminations within the switch itself.
UNIVERSAL SERVICE ORDER CODE (USOC)	The line class code defined in Office Record 5306, Line Class Code.
WSP	Wireless Service Provider, previously known as a CMS (Cellular Mobile Carrier).

3. ACRONYM DEFINITIONS

Acronym	Definition
12NC	Numeric 12-Digit Product Code
13A	Bubble Memory Recorded Announcement System
1AEB	1A Event Buffer
1PSS	No. 1 Packet Switching System
2B1Q	2 Binary 1 Quaternary
2STPE	No. 2 Signal Transfer Point Emulator
2W	Two-Wire
2W/4W	2 Wire To 4 Wire
2WE&M	2 Wire Ear And Mouth
3B20	Bell Super-Mini Computer
3B20D	3B20 Duplex
3B5	Small System Processor Control Unit
3BCC	3B Processors Central Control
3BCU	3B Control Unit
3BEB	3B Event Buffer
3BI	3B (Computer) Interface
3BPCF	Modified 3B Processor Peripheral Control Frame
3BSCSD	3b Scanner/Signal Distributor
3BTAC	3B Terminal Access Controller
3BTAC	3b Terminal Access Controller
3CL	A Type Of Toll Switch Board
4B3T	4 Binary 3 Ternary
4W	Four Wire
5-FTS	5ESS Field Test Set
5E2	5ESS Switch Second Domestic Generic
5E3	5ESS Switch Third Domestic Generic
5E4	5ESS Switch Fourth Domestic Generic
5E5	5ESS Switch Fifth Domestic Generic
5ESE	5ESS Switch Small Exchange
5SDH	5ESS Switch Subdevice Handler
5SDHMM	5SDH Multimod
5SDHSM	5SDH Small Office
100 TEST LINE	Measures far to near end loss and near end noise.
102 TEST LINE	Measures far to near end loss.
105 TEST LINE	Measures two-way loss and noise.

3.1 A

Acronym	Definition
A&DCU	Alarm And Digroup Control Unit
A&M	Administration And Maintenance
A/D	Analog To Digital Conversion
A/L	A-Law To Linear
AABS-AP	Automated Alternate Billing Services - Automated Position
AAP	Automated Access Prompting
AAS	Application Administration Subsystem
AATLSOS	Alternate Access to Language Specific Operator Services
AATOS	OSPS Alternate Access to Operator Systems
AAU	Alarm Adaptor Unit
AAU	Audible Alarm Unit
AB	Access Barred
AB	Alarm Battery Alarm

Copyright © 2006 Lucent Technologies

ABC	Automatic Bill Calling
ABD	Average Business Day
ABLKD	Abnormally Blocked
ABS	Absent Subscriber Service
ABSBH	Average Busy Season Busy Hour
AC	Action Complete
AC	Alternating Current
AC	Analog Access
AC	Attendant Conference
AC	Audit Control
AC	Authorization Codes
AC	Automatic Callback
ACA	Automatic Circuit Assurance
ACBC	Automatic Callback Calling
ACC	Access Code
ACC	Administrative Control Center (An OSPS Office Head)
ACC	Alarm Conversion Circuit
ACCB	Access Bus
ACCS	Automated Calling Card Service
ACCSQ	Automed Calling Card Sequence
ACCT	Account Code
ACD	Automatic Call Distribution
ACD	Automated Call Directory
ACD	Automatic Call Distributor/Distribution
ACDF	Automatic Call Distribution Features
ACE	Automated Cable Expertise
ACE	Automatic Calling Equipment
ACG	Automatic Call Gapping
ACHI	Application Channel Interface
ACK	Acknowledge
ACL	Alternate Component List
ACM	Address Complete Message
ACM	Apparatus Coded Module
ACMOS	Automatic Customer Message Out-putting System
ACO	Additional Call Offering
ACOF	Attendant Control Of Facilities
ACP	Action Point
ACP	All-Call Privacy
ACP	Advanced Communications Package
ACQS	Automatic Charge Quotation Service
ACRG	Access Code Restriction Group
ACS	Alarm Call Service
ACS	Audible Call Screening
ACS	Automatic Call Simulator
ACSI	Automatic Calling Station Identification (BRCS/ISDN Feature)
ACSR	Automatic Customer Station Rearrangement
ACT	Active
ACT	Alternative Code Treatment
ACTB	All Concentrator Trunks Busy or ATB
ACTR	Automatic Call Type Recognition
ACTS	Automated Coin Toll Service
ACU	Automatic Calling Unit
ACVT	Attendant Control of Voice Terminals
AD	Abbreviated Dialing
ADDR	Address
ADE	Adaptive Design Engineering
ADLM	Advanced Distribution And Location Model
ADM	Adaptive Delta Modulation
ADOB	Alternate Destination On Busy
ADP	Automatic Diagnostic Process
ADPCM	Adaptive Differential Pulse Code Modulation
ADR	Alternate Data RAM
ADS	Architecture Development Specification
ADSI	Analog Service Display Interface
ADU	Audio & Display Unit
AEC	Audit, Edit And Check
AEMIS	ACD-ESS Management Information System
AFR	Automatic Flexible Routing
AGA	Automatic Gain Adjust

Copyright © 2006 Lucent Technologies

AGC	Auto Gain Control
AI	Access Interface
AI	Address Incomplete
AI	Assignment Request Indicator
AIC	Agent Intercom Call
AIC	Automated Initial Calls
AIC	Automatic Intercept Centers
AILS	Automated Inward Line Screening
AIM	Analog Interface Module
AIM	Application Integrity Monitor
AIN	Advanced Intelligent Network
AIOD	Auto Identified Outward Dialing
AIOD	Auto Input/Output Dialing
AIS	Alarm Indication Signal
AIS	Automatic Intercept System
AIU	Analog Interface Unit
AIU	Application Interface Unit
ALCB	Access Line Control Block
ALI	Automatic Location Identification
ALIT	Automatic Line Insulation Testing
ALM	Alarm
ALPX	Administration Of Lines In A Power Cross State
ALT	Automatic Link Transfer
ALU	Analog Line Unit
ALU	Arithmetic Logic Unit
ALV	Automatic Line Verifier
ALW	Allow
AM	Administrative Module
AM	Area Manager
AM-RTA	AM-Regional Technical Assistance
AMA	Automatic Message Accounting
AMAC	Automatic Message Accounting Collection System
AMACS	Automatic Message Accounting Collection System
AMAKP	Automatic Message Accounting Kernel Process
AMARC	Automatic Message Accounting Recording Center
AMARS	Automatic Message Accounting Recording System
AMASE	Automatic Message Accounting Standard Entries
AMAT	AMA Teleprocessing
AMATAN	Automatic Message Accounting Tape Analyzer
AMATP	Automatic Message Accounting Teleprocessing
AMATPS	Automatic Message Accounting Teleprocessing
AMDC	AMA OSDS System Process
AMGR	Audit Manager Program
AMI	Alternate Mark Inversion
AML	Automatic Maintenance Limit
AMLC	Automatic Maintenance Limit Count
AMPS	Advanced Mobile Phone Service (Now AUTOPLEX)
ANC	All Number Calling
ANI	Automatic Number Identification
ANIF	Automatic Number Identification Failure
ANM	Answer Message
AO	Add-On
AO&M	Administration, Operation And Maintenance
AOSTT	Automatic Out-Of-Service Trunk Test Dispatcher
AP	Address Parity
AP	Administrative Printer
AP	Administrative Processor
AP	Applications Processor
AP	Argument Pointer
AP	Attached Processor
AP	Automated Position
APB	Attached Process Block
APC	Adjacent Point Code
APC	Auxiliary Power Card
APDAN	Auxiliary Processor Data Available
APECS	Advanced Programmable Electronic Call Simulator
APF	All PINs Fail
APH	Application Protocol Handler
API	Access Provider Identifier

Copyright © 2006 Lucent Technologies

API	Action Point Identifier
APID	Applications Processor Identification
APLS	Auxiliary Program Library System
APMH	Attached Processor Message Handler
APPRC	5ESS Switch Application Recent Change
APREQ	Auxiliary Processor Request
APS	Apparatus Product Schematic
APS	Attached Processor System
APS	Automated Position System
APSM	Apparatus Product Schematic For Manufacture
APT	Automatic Progression Testing
AQ	Auto Quote
AQTP	Autoquote Terminal Process
AR	Assert Range
AR	Automatic Recall
AR/AC	Auto Recall/Auto Call Back
ARDY	Asynchronous Ready
ARGC	Argument Counter
ARGP	Argument Pointer
ARS	Automatic Route Selection
ARSB	Automated Repair Service Bureaus
ARU	Audio/Audible Response Unit
ARU/TP	Audible Response Unit - Terminal Process
ARUC	Audible Response Unit Controller
AS	Administrative Services Subsystem
AS	Analysis System
AS	Administrative Services
ASB	Assistance Service Board
ASB	Attendant Source Billing
ASC	Alarm Service Unit
ASC	Alarm Status Circuit
ASC	Announcement Storage Circuit
ASCII	American Standard Code For Information Interchange
ASF	Attribute Specification File
ASM	Administrative Status Monitor
ASM	Automated Switching Module = PSM Or SM
ASMDR	Advanced Station Message Detail Recording (Switch)
ASP	Advanced Services Platform
ASP	Alarm Status Panel
ASP	Application Specific Package
ASP	Assignment Source Point
ASP	Auxiliary Services Position
ASAP	Automated Service Access Prompting
ASAP R2	Automated Service Access Prompting Release 2
ASR	Automatic Send And Receive
ASR	Automatic Speech Recognition/Recognizer
ASSDL	Automatic Allocation Of Signaling Data Links
ASSERT	Assert Subsystem (For Making Assertions)
ASST	Assisting
AST	Acknowledge Seizure Timeout
ASW	All Seems Well
AT	Access Tandem
AT	Action Time
AT	Administrative Terminal
ATA	Asynchronous Terminal Adapter
ATB	Address Translation Buffer
ATCAF	Automated Test Calling Facility
ATCO	Automation of TCS/CPS Override
ATD	Attendant Through Dialing
ATD	Automatic Test Dispatcher
ATH	Authorization Code
ATIME	Absolute Time
ATLAS	Automatic Testing And Load Analysis System
ATME	Automatic Transmission Measuring Equipment
ATM	Asynchronous Transfer Mode
ATMS	Automatic Transmission Measuring System
ATOMICS	Advanced Traffic Observation And Management Information Collection System
ATOS	Automated Toll Operator Services
ATP	Access Transport Parameter

Copyright © 2006 Lucent Technologies

ATP	Advanced Telemetry Processor
ATP	Alarm Terminal Process
ATP	All Tests Passed
ATP	Announcement Terminal Process
ATP	Automated Terminal Process
ATP	SS7 Access Transport Parameter
ATS	Automatic Terminal Setup
ATSC	Auto Termination Of Signaling Irregularity Calls
ATT	Attendant
ATTS	Automatic Trunk Test Scheduler
ATTT	Automatic Trunk Test Table
ATU	Analog Trunk Unit
AU	Audit Subsystem
AUDIT	A Sanity Communication Command
AUTISS	Automatic Time Slot Switching
AUTO	Automatic Unit Testing Tool
AUTOVON	Automatic Voice Network
AUTRAX	Automatic Traffic Recording And Analysis Complex
AVCDA	Automatic Voice Charge And Duration Advice
AVD	Alternate Voice/Data
AVRT	Avoidance Routing
AVT	Access Via Tandem
AWT	Average Work Time
AXP	Auxiliary Processor Cabinet
AXPIC	Auxiliary Processor Initialization & Operation Capability
AXPU	Auxiliary Processor Unit

3.2 B

Acronym	Definition
B8ZS	Bitwise 8 Zero Suppression Code
B911	Basic 911 Service
BACH	Basic ACD And Call Handling
BANCS	Bell Administration Network Communication System
BBG	Basic Business Group
BBHC	Billing Busy Hour Capacity
BCAC	Business Customer Administration And Control
BCID	Business Customer Identification Number
BCLID	Bulk Calling Line Identification
BCON	Battery Connect
BCR	Bell Communication Research
BCR	Bus Control Register
BDEVTAB	Block Device Table
BDU	Bus Display Unit
BER	Bit Error Rate
BFOR	Battery Forward
BGB	Bidirectional Gating Bus
BGNEX	Begin Execution
BGR	Buffered Bidirectional Gating Register
BGSP	Background System Process
BHC	Block Hardware Check
BHC	Busy Hour Calls
BIB	Backward Indicator Bit
BIC	Bus Interface Controller
BITS	Basic Interexchange Telephone Service
BL/NA	Busy/No Answer
BLA	Blocking-Acknowledgement
BLDG	Building
BLF	Busy Lamp Field
BLS	Basic Local Service
BLV	Busy Line Verification
BLX.25	Communications Protocol - See X.25
BMF	Backup Management Facility
BMI	Batch Mode Immediate (RC)
BMR	Batch Mode Release
BND	Billing Number Delivery
BNS	Billed Number Screening
BOC	Bell Operating Companies

Copyright © 2006 Lucent Technologies

BOC	Build-Out Capacitor
BOS	Bit-Oriented Signaling
BOS	Business Office Supervisor
BOSS/PT	Business Office Support System/Programmers Terminal
BPIDB	Bypass Peripheral Interface Data Bus
BPS	Bits Per Second
BPSS	Basic Packet Switching Service
BPT	Breakpoint Trap
BQPN	Block Queries for Private Numbers
BRCS	Business And Residential Customer Services
BRCSDB	BRCS Data Block
BREV	Battery Reverse
BRG	Bridge/Bridging
BRI	Basic Rate Interface
BRIV	Basic Rate Interface Vertification
BSC	Business Services Center
BSI	Bearer Service Identification
BSN	Backward Sequence Number
BST	Basic Services Terminal
BT	Buffer Threshold
BTSR	Bootstrapper Board
BUCP	Backup Control Process
BUD	Back Update Database
BUF	Buffer
BVA	Billing Validation Application
BVF	Billing Validation File
BWM	Broadcast Warning Message
BX.25	A CCITT Communications Protocol - See X.25
BY	Busy

3.3 C

Acronym	Definition
C	Connect
C&D	Control And Display
C&FC	Coin & Fee Check
C/D	Control Display
C/E	Cause And Effect
CA	Cache Address Bus
CA	Call Accepted
CA	Call Appearance
CA	Circuit Administrator
CA	Community Address
CA	Connect Acknowledge
CA	Coverage Analyzer
CAC	Cache Controller
CAC	Carrier Access Code
CAC	Common Administrative Capability
CAC	Country Access Code
CAC	Customer Administration and Control
CACS	Customer Administration Center System
CAD	Computer Aided Design
CADN	Circuit Administration
CADV	Combined Alternate Data Voice
CAG	Centralized Administrative Group
CAI	Call Assembly Index
CAI	Computer Aided Instruction
CAI-ICOM	Call Appearance Intercom
CACH EKTS CA	Call Appearance
CALL	Computer Assisted Lesson Library
CAM	Cache Memory
CAM	Computer Aided Manufacturing
CAMA	Centralized Automatic Message Accounting
CAN	Cancel
CAP	Capability
CAP	Communications Audit Process
CAP	Competitive Access Provider
CAPFIT	CAPacity Fit

Copyright © 2006 Lucent Technologies

CAPFORMS	Capability Forms System
CAPMGR	Capability Manager
CAR	Customer Access Restriction
CAROT	Centralized Automatic Reporting On Trunks
CAS	CPE Alerting Signal
CAS	Customer Account Services
CAS NCP	Customer Account Services Network Control Point
CATL	Code Answer Test Line
CATLAS	Centralized Automatic Trouble Location And Analysis System
CATP	Conditional All Tests Pass
CB	Change Back
CB	Control Block
CB	Control Bus
CC	Call Completion
CC	Call Connected
CC	Call Coordinator
CC	Common Control
CC	Central/Common Control
CC	Common Channel Signaling
CC	Conference Circuit
CC	Control Console
CC	Country Code
CC	Common Control
CCA	CMOS Cell Array
CCA	Code Coverage Analyzer
CCB	Channel Control Block
CCB	Communications Control Buffer
CCBCOM	Channel Control Block Communication Region
CCC	Custom Calling Coordinator
CCCA	Central Coordinator Circuit Administration
CCD	Common Capabilities Document
CCF	Call Confirmation Message
CCF	Corporate Component File
CCI	Call Characteristic Index
CCI	Computer Consoles Incorporated
CCIF	Call Coordinator Interflow
CCIOB	Central Control Input Output Bus
CCIS	Common Channel Interoffice Signaling
CCIS6	Common Channel Signaling System No. 6 Domestic
CCISPCH	CCIS PC Handler
CCITS	Common Control Integrated Test System
CCITT	International Telegraph And Telephone Consultative Committee
CCITT6	CCITT Common Channel Signaling System Number 6
CCITT7	CCITT Common Channel Signaling System Number 7
CCITT7-PSIU	PSIU Containing The CCITT7 Signaling Terminals
CCITT7-SM	SM Containing The CCITT7-PSIU
CCM	Call Connect Message
CCM	Call Control Modules
CCMA	Common Channel Maintenance Administration
CCOP	Call Coordinator - Operator
CCOT	Call Coordinator - Originating Treatment
CCPUMP	Business And Residential Custom Services
CCQS	Centralized Charge Quotation Service
CCRD	Calling Card
CCS	Centrum Call Seconds
CCS	Common Channel Signaling
CCS	Common Communication Subsystem
CCS	Hundred Call Seconds
CCS7	Common Channel Signaling, CCITT Version 7
CCSA	Common Control Switching Arrangement
CCTT	Call Coordinator - Terminating Treatment
CCU	Combined Channel Unit
CCV	Call Charge Verification
CCW	Cancel Call Waiting
CD	Cache Data Bus
CD	Charge Delay
CD	Circuit Description Document
CD	Common Data
CD	Common Data Pack (Of The ISLU)

Copyright © 2006 Lucent Technologies

CD	Control Distribution Frame
CDA	Call Data Accumulator
CDA	Carrier Detect (RS-232)
CDA	Charge And Duration Advice
CDA	Configuration Status Audit
CDAC	Control & Diagnostic Access Circuit
CDAL	Control And Diagnostic Access Link
CDAR	Customer Dialed Account Recording
CDB	Circuit Data Block
CDBCOM	Circuit Data Block Communication Region
CDC	Call Directing Code
CDC	Central Data Collection
CDC	Control Distributor Controller
CDC	Control/Data Circuit
CDC	Country Destination Code
CDCU	Control Distribution Controller Unit
CDEVTAB	Block Device Table
CDF	Common Design File
CDI	Code Index
CDI	Control And Data Interface
CDL	Call Distribution/Description Language
CDIM	Carrier Destination Mapping
CDMA	Code Division Multiple Access
CDMPU	Control Distribution Message Processor Unit
CDNCU	Control Distribution Network Clock
CDO	Community Dial Office
CDOS	Customer-Dialed Operator-Serviced
CDP	Custom Dialing Plan
CDPR	Customer Dial Pulse Receiver
CDR	Call Detail Record
CDR	Channel Data Register
CDSDREAD	A Command To Read Data From An FPC Subdevice
CDSDWRITE	A Command To Send Data To An FPC Subdevice
CDT	Communications Display Terminal
CDT	Communications Display Terminal/Trunk
CDX	Compact Digital Exchange
CE	Cause-Effect
CENTREX	Central Office PBX
CERDIP	Ceramic Dual In Line Package
CF	Call Forwarding
CF	Coin First
CF	Control Fanout
CF	Control Frame
CFA	
CFA	Carrier Failure Alarm
CFB	Call Forwarding Busy
CFBL	Call Forwarding Busy Line
CFDA	Call Forwarding Don't Answer
CFDA/CW	Call Forwarding Don't Answer after Call Waiting
CFF	Central Firmware File
CFH	Call Failure Handling
CFN	Call Forwarding Because No Answer
CFNS	Call Forwarding Night Service
CFPF	Call Forwarding Over Private Facilities
CFR	Centralized Flexible Rating
CFR	Coin Flexible Rate
CFUS	Call Forwarding Unrestricted Source
CFV	Call Forwarding Variable
CG	Concentrator Group
CGA	Carrier Group Alarm
CGID	Calling Party Identification
CgPS	Calling Party Subaddress
CH	Call Hold
CH	Core Hardware
CHAN	Channel
CHANNEL	Peripheral-Side TSI Time Slot
CHCKT	Channel Circuit
CHCT	Channel Circuit
CHD	Call Hold

Copyright © 2006 Lucent Technologies

CHDB	Channel Data Block
CHILL	CCITT High Level language
CI	Call Identify
CI	Carrier Interconnect
CI	Control Interface
CI	Craft Interface
CI	Critical Information
CIA	Critical Indicator Administrator
CIB	Centralized Intercept Bureau
CIB	Control Interface Bus
CIC	Carrier Identification Code
CIC	Circuit Identification Code
CIC	Controller Interface Circuit
CIC	Customer Information Center
CID	Call Identifier
CID	Conditionally Initializable Data
CIDB	Control Interface Data Bus
CIDCW	Calling Identity Delivery on Call Waiting
CIID	Customer Identification Card
CIM	Clear Indication Message
CIM	Cluster Interface Module
CIMA	Computer Integrated Manufacturing Architecture
CINT	Command Interrupt
CIP	Carrier Identification Parameter
CIP	Critical Indicator Panel
CIR	Customer Information Release
CK	Check Bits
CK	Conflicting Key
CKT	Circuit
CKTDATA	Circuit Data Audit
CL	Communication Line
CLC	Clear Confirmation
CLCI	Common Language Trunk Identifier
CLEI	Common Language Equipment Identification
CLFR	Communication Link Fault Recovery
CLI	Called/Calling Line Identification
CLI	Circuit Level Indicator
CLI	Clear Indication
CLK-CNT	Clock-Control
CLLI	Common Language Location Identifier
CLM	Communication Link Monitor
CLM	Core Linkage Module
CLMP	Communication Link Maintenance Process
CLR	Clear
CLR	Clear Request
CLRC	Circuit Layout Record Card
CLRER	Clear Channel Error
CLRT	Control Link Receiver/Transmitter
CLV	Calling Line Verification
CLWC	Cancel Leave Word Calling
CM	Communication Module
CM	Communication Package Subsystem
CM	Coverage Monitor
CM	Interprocessor Communication System
CM1	Communications Module 1
CM2	Communications Module 2
CMAC	Centralized Machine Administration Center
CMC	Cellular Mobile Carrier
CMD	Command
CMDF	Combined Main Distributing Frame
CMDR	Centralized Message Detail Recorder
CMGA	Craft Message Generator Analyzer
CMI	Control Mode Idle
CMISE	Common Management Information Service Element
CMKP	Communications Kernel Process
CMOC	Centralized Maintenance and Operation Center
CMON	Craft Interface Integrity Monitor
CMOS	Complementary Metal Oxide Semiconductor
CMP	Communication Module Processor

Copyright © 2006 Lucent Technologies

CMS	Circuit Maintenance System
CMSP	Central Manager System Process
CMSS	Customer Message Service System
CN	Change Notice
CN	Charge Number
CN	Conference Notes
CN	Control And Network Frame
CN	Customer Networking
CNA	Customer Name And Address Records
CNAC	CCIS Network Administration Center
CNAM	Calling Party Name
CNCC	Customer Network Control Center
CND	Calling Number Delivery
CNDTF	Coin Dial Tone First
CNGI	Calling Number Identification Services Intragroup Delivery Only
CNGI	CNIS Intra-group Only Delivery
CNI	Change Number Intercept
CNI	Common Network Interface
CNI/IMS	Common Network Interface/Interprocess Message Switch
CNIGI	Calling Number Intragroup ICLID
CNIGI	CNIS Intra-Group Delivery Option
CNIS	ISDN Calling Number Identification Services
CO	Central Office
CO	Change Order
CO	Change Over
CO	Cutover
COAN	Common Operator Access To Network
COC	Class Of Charge
COCOTS	Customer Owned, Coin Operated Telephones
CODEC	Coder-Decoder
COEES	Central Office Equipment Estimation System
COER	Central Office Equipment Report
COFF	Common Object File Format
COH	Consultation Hold
COM	Computer Output Microfilming
COMCNTRL	Common Control
COMDAC	Common Data And Control Circuit
COMDATA	Common Data
COMIC	Community Interface Control
CON	Congestion
CONC	Concentrator
CONCSCAN	Concentrator And Scanner Circuit
CONF	Conference
CONFIG	Configuration Control
CONT	Controller
COP	Common Optional Package
CORC	Customer Originated Recent Change
COS	Class Of Service
COSMOS	Computer System For Main Frame Operations
COT	Central Office Technician
COT	Central Office Terminal
COT	Common Optical Termination
COT	Customer Originated Trace
COV	Changeover Signal
COWG	Central Office Work Group
CP	Call Processing
CP	Central Processor
CP	Circuit Pack
CP-REXS	Central Processor Routine Exercise Scheduler
CPA	Commercial Power Alarm
CPB	Controller Peripheral Bus
CPBP	Central Processor Backup Process
CPC	Card Protection Center
CPC	Circuit Provisioning Center
CPD	Central Pulse Distributor
CPD	Circuit Pack Design
CPDL	Call Processing Data Link
CPE	Customer Premises Equipment
CPH	Calls Per Hour

Copyright © 2006 Lucent Technologies

CPH	Communication Protocol Handler
CPI	Central Processor Intervention
CPID	Linecard Register Containing Circuit Pack Identifier
CPLR	Coupler Data Block
CPN	Calling Party Number
CPN/BN	Calling Party Number/Billing Number
CPNP	Calling Party Number Presentation
CPOS	Call Processing Operating System
CPPCBLA	Central Processor Process Control Block Link Area
CPS	Circuit Pack Schematic
CPS	Country Pair Screening
CPS	Customer Premises Systems
CPSM	Circuit Pack Schematic For Manufacture
CPT	Controlled Product Test
CPTR	Circuit Pack Test Requirements
CPU	Call Pickup
CQB	Circuit Queuing Blocks
CR	Call Record
CR	Call Record Assembler
CR	Call Request
CR	Critical Alarm
CRA	Call Record Assembler
CRA	Call Record Assembler
CRC	Cyclic Redundancy Check/Code
CREG	Concentrated Range Extension With Gain
CRI	Circuit Revision Instruction (Teletype)
CRLU	Cost Reduced Line Unit
CRM	Circuit Reservation Message
CRM	Clear Request Message
CRM	Commands And Reports Manual
CRO	Cancel Rerouted Overflow
CRR	Centralized Rate And Route
CRR	Controlled Rerouting
CRS	Centralized Results System
CRSAB	Centralized Repair Service Attendant Bureau
CRT	Cathode Ray Terminal
CRTSI	Cost Reduced Time Slot Interchanger
CRTX	Common Real Time Executive Operating System
CRUCC	Cost Reduced Universal Conference Circuit
CRUTD	Cost Reduced Universal Tone Decoder
CRUTG	Cost Reduced Universal Tone Generator
CRV	Call Reference Value
CS	Call Sent
CS	Call Store
CS	Cell Site
CSA	Carrier Serving Area
CSA	Configuration Status Audit
CSADB	Centralized Service Assessment Display Board
CSAR	Centralized System For Analysis And Reporting
CSC	Customer Service Center
CSD	Circuit Switch Data
CSD LIMIT	Call Reference Busy Limit
CSD NBLIMIT	Call Notification Busy Limit
CSDC	Circuit Switched Digital Capability
CSE	Carrier Selection Enforcement
CSINT	Concentrator And Scanner Interface Circuitry
CSMDRS	Centralized Station Message Detail Recording System
CSO	Central Services Organization
CSOP	Complex Service Order Process
CSOP	Coordinator Of Spooler Output Processes
CSP	Control Switching Point
CSP	Controller Subordinate Process
CSPDN	Circuit Switched Public Data Network
CSR	Customer Station Rearrangements
CSRID	Customer Station Rearrangement Identification
CSS	Centralized Special Services
CSS	Computer Subsystem
CST	Central Standard Time
CST	Combined Services Terminal

Copyright © 2006 Lucent Technologies

CSU	Cache Store Unit
CSU	Combined Service Unit
CSU	Channel Service Unit
CSV	Circuit Switched Voice
CSV LIMIT	Call Reference Busy Limit
CSV NBLIMIT	Call Notification Busy Limit
CT	Call Type
CT	Central Trunk Test Unit
CT	Congestion Tone
CTA	Call Transfer Attendant
CTIAC	Call Transfer Individual All Calls
CTIIO	Call Transfer Individual Incoming Only
CTIO	Call Transfer Internal Only
CTS	Common Test System
CTS	Control Time Slot
CTSP	Control Time Slot Pump Process
CTTU	Centralized Trunk Test Unit
CTTU/RTTU	Centralized Trunk Test Unit/Remote Trunk Test Unit
CTU	Cell Translation Update
CTX	CENTREX
CU	Control Unit
CU	Converter Unit
CU/TK	Common Update/Trunking
CUD	Central Update Database
CUP	Control Unit Power
CUP	Customer Programmability
CUT	Circuit Under Test
CVT	Circuit Validation Test
CW	Call Waiting
CWI	Call Waiting Indication
CWC1	Call Waiting with Cancel 1
CWC1DT1	Call Waiting with Cancel 1 with Distinctive Tone 1
CWC1DT2	Call Waiting with Cancel 1 with Distinctive Tone 2
CWC2	Call Waiting with Cancel 2
CWC2DT	Call Waiting with Cancel 2 with Distinctive Tone
CWD	Call Waiting Deluxe
CWDC1	Call Waiting Deluxe with Cancel 1
CWDC2	Call Waiting Deluxe with Cancel 2
CWDC2DT	Call Waiting Deluxe with Cancel 2 with Distinctive Tones
CWDCDT1	Call Waiting Deluxe with Cancel 1 with Distinctive Tone 1
CWDCDT2	Call Waiting Deluxe with Cancel 1 with Distinctive Tone 2
CWDIO	Call Waiting Deluxe Incoming Only
CWDIODT	Call Waiting Deluxe Incoming Only with Distinctive Tones
CWDT	Call Waiting Deluxe Terminating
CWDTDT1	Call Waiting Deluxe Terminating with Distinctive Tone 1
CWDTDT2	Call Waiting Deluxe Terminating with Distinctive Tone 2
CWIO	Call Waiting Incoming Only
CWIODT	Call Waiting Incoming Only with Distinctive Tones
CWL	Call Waiting Lamps
CWO	Camp-on (BRCS Feature)
CWO	Call Waiting Originating
CWT	Call Waiting Terminating
CWTDT1	Call Waiting Terminating with Distinctive Tone 1
CWTDT2	Call Waiting Terminating with Distinctive Tone 2
CWTFD	Call Waiting Feature Definition
CXR	Carrier

3.4 D

Acronym	Definition
D	Disconnect
D+AR	Data Rate And Adaptation Method
D/A	Digital To Analog Conversion
D/A	Digital/Analog
D2SBS	Duplex Dual Serial Bus Selector
D4	A Type Of Channel Bank
DA	Data
DA	Destination Address

Copyright © 2006 Lucent Technologies

DA	Digit Analysis
DA	Directory Assistance
DA	Dynamic Access Subsystem
DAA	Direct Agent Access
DAA	Design Automation Assistant
DAB	Directory Assistance Bureau
DAC	Directory Assistance - Charging
DACS	Digital Access And Cross Connect System
DACS IV-2000	Digital Access and Cross Connect System IV-2000
DACTSR	Data, Control And Service Circuitry
DACU	Device Attachment Control Unit
DALB	D Channel Application Linkage Block
DAM	Data Access Model
DAM	Dual Access Memory
DAP	Display Administration Process
DARAM	Dual Access Random Access Memory
DART	Debugger For A Remote Target
DAS	Data Auxiliary Set
DAS	
DASC	Directory Assistance System Computer
DASS	Digital Access Signaling System
DATA	DATA Subsystem
DB	Database Subsystem
DB	Decibel
DB	Display Buffer
DBA	Data Base Administrator
DBAS	Data Base Administration System
DBM	Data Base Manager
DBMS	Data Base Management System
DBS	Duplex Bus Selector
DBTG	Data Base Task Group
DBU	Dial Backup Unit
DC	Device Control (Set Of IA5 Characters)
DC	Direct Current
DC	Directly Connected Test Unit
DC	Do Not Care
DCA	Dynamic Channel Assignment
DCB	Device/Diagnostic Control Block
DCCB	D-channel control block
DCD	Data Collection Device
DCD	Digital Call Distribution
DCDB	Digit Collection Data Block
DCDB	D-Channel Data Block
DCE	Data Circuit-Terminating Equipment
DCE	Data Communications Equipment
DCEC	Database Change And Evaluation Committee
DCF	Defensive Check Failure
DCF	Digital Carrier Facilities
DCLU	Digital Carrier Line Unit
DCO	Digital Central Office
DCO	Digital Controlled Oscillator
DCP	Data Communications Protocol
DCP	Distributed Call Processing
DCR	Directory Charge Recording
DCRGS	Data Collection And Report Generation Of Resource Usage Information System
DCS	Diagnostic Control Structure
DCS	Digital Conference System
DCS	Digital Cellular Switch
DCT	Digital Carrier Terminal
DCT	Digital Carrier Terminal/Trunk
DCT	Direct Connect Trunks
DCT	Dispatcher Control Table
DCTN	Defense Commercial Telecommunications Network
DCTU	Directly Connected Test Unit
DCW	Dial Call Waiting
DCWT	Distinctive Call Waiting Tone
DD	Data Delivery
DD	Delay Dial
DDA	Directory Database Administration

Copyright © 2006 Lucent Technologies

DDAS	Dynamic Data Access Subsystem
DDCC	Design And Documentation Coordination Committee
DDD	Direct Distance Dialing
DDI	Direct Dialing In
DDL	Data Definition Language
DDL	Derived Data Links
DDM-2000	Dual Digital Multiplexer - 2000
DDP	Data Definition Process
DDS	Digital Data Service/System
DDSBS	Duplex Dual Serial Bus Selector
DDSN	Digital Derived Services Network
DEACT	Deactivate
DEMUX	Demultiplexer
DEN	Digital Equipment Number
DEP	Data Entry Procedure
DESEP	Destination Separation Class
DESS	Digital Electronic Switching System
DEV	Device
DEVID	Device Identification
DF	Data Fanout
DF	Disk File Unit
DF	Distributing Frame
DF	Duplex Failure
DFC	Disk File Controller
DFD	Data Flow Diagram
DFF	Digital Facilities Frame
DFI	Digital Facility Interface
DFI-H	RISLU Host DFI
DFI-H1	RISLU Host DFI Type 1(Remotes A PICB And A PIDB To Remote Site)
DFI-H2	RISLU Host DFI Type 2(Remotes A PIDB To Remote Site)
DFI-R	RISLU Remote DFI
DFI-R1	RISLU Remote DFI Type 1(Remotes A PICB And A PIDB To Remote Site)
DFI-R2	RISLU Remote DFI Type 2(Remotes A PIDB To Remote Site)
DFTAC	Distributing Frame Test Access Circuit
DFU	Digital Facilities Unit
DFU	Disk File Unit
DG	Digroup
DG	Diagnostic Control Subsystem
DG	Diagnostics Supervisor
DGEN	Data Generation
DGN	Diagnose/Diagnostic
DGT	Digit Analysis
DI	Data Interface
DI	Destination Index
DI	Dielectric Isolation
DIAG	Diagnose
DIAGC	Diagnostic Control Program
DIAMON	Diagnostic Monitor Program
DID	Direct Inward Dialing
DIF	Digital Interface Frame
DIM	Digital Interface Module
DIO	DMA I/O Bus
DIOB	Director Memory Access I/O Bus
DIOR	Direct International Originations
DIP	Dual Inline Package
DIS	Disconnect
DISC	Disconnect
DISPDB	Display Data Block
DIST	Distribute
DIT	Display Information Table
DIVA	Digital Input-Voice Answer-back
DKDRV	Disk Driver
DKI	Disc/Disc Inverter
DL	Data Link
DLC	Digital Loop Carrier
DLDSL	Data Link Digital Subscriber Line
DLI	Dual Link Interface (Part Of SM)
DLICON	Dual Link Interface Configuration
DLIT	Demand Line Insulation Test

Copyright © 2006 Lucent Technologies

DLM	Digital Link Module
DLN	Direct Link Node
DLP	Decode Level Point
DLRU	Data Link Receiving Unit
DLT	Data Link Terminal
DLT	Digital Link Trunk Frame
DLT	Digital Link Trunk Port
DLTU	Digital Line And Trunk Unit
DLTU-RH	RISLU Host DLTU
DLTU-RR	RISLU Remote DLTU
DLTU/LU	Digital Line Trunk Unit/Line Unit
DLU	Data Link Unit
DM	Disconnected Mode
DM	Domain
DMA	Direct Memory Access
DMA/IO	Direct Memory Access/IO Unit
DMAC	Direct Memory Access Controller
DMAM	Deferred Maintenance Administrator And Monitor
DMAS	Dedicated Maintenance And Administrative Services
DMCH	DMA Channels
DMD	Dot Mapped Display
DMERT	Duplex Multi-Environment Real-Time Operating System
DMG	Digital Master Group
DMI	Digital Multiplexed Interface
DML	Data Manipulation Language
DMODE	Linecard Register For Controlling The D-Channel Mode
DMON	Diagnostic Monitor Process
DMU	Data Manipulation Unit
DMW	Digital Milliwatt
DN	Diagnostics-SM Subsystem
DN	Directory Number
DNA	Data Network Address
DNA	DN Appearance
DNCP	Diagnostics-CP Subsystem
DND	Do Not Disturb Service
DNET	Defer Non-Essential Tasks
DNHR	Dynamic Non-Hierarchical Routing
DNIC	Data Network Identification Code
DNS	Data Networking Services
DNT	Dialed Number Trigger
DOC	Dynamic Overload Control
DOD	Direct Outward Dialing
DOMSCR	Dominant Screening
DOPS	Digital Ordering And Planning System
DOR	Division Of Revenue
DOTS	Digital Office Timing Supply
DP	Destination Point
DP	Dial Pulse/Pulsing
DP	Duplex Processor
DPAT	Dialing Plan Access Treatment
DPB	D-Channel Port Block
DPB	Data Port Board
DPBX	Digital Private Branch Exchange
DPC	Data Port Circuit
DPC	Destination Point Code
DPCM	Differential Pulse Code Modulation (TV Signal Compression)
DPH	Data Priority High
DPIDB	Directly Connected Peripheral Interface Data Bus
DPKT	D-channel Packet
DPL	Data Priority Low
DPLL	Digital Phase Lock Loop
DPN	Directed Pickup Nonbarge-In
DPN	Distribute Point Number
DPNSS	Digital Private Network Signaling System
DPT	Diagnostic Phase Table
DPU	Directed Pickup With Barge-In
DQD	Directory Query Display
DR	Distinctive Ring
DRE	Directional Reservation Equipment

Copyright © 2006 Lucent Technologies

DRS	Digital Reference Sequence
DS	Digital Signal
DS0	64-Kilobit-per-Second PCM Transport Facility
DS0	Digital Signal Level 0
DS1	1.544 Mega-baud Data Channel
DS1S	Digital Signal Level 1 SONET
DSA	Dial Service Assistance
DSBLD	Disabled
DSC	Data Set Cabinet
DSC	Digital Services Circuit
DSC	Dual Serial Channel
DSCCOM	Digital Service Circuit Common
DSCH	Dual Serial Channel
DSCP	Digital Service Circuit Pack/Port
DSCU	Digital Service Circuit Unit
DSD	Direct Services Dialing
DSD-NSC	Direct Services Dialing - Network Services Center
DSDC	Direct Services Dialing Capability
DSE	Direct Signaling Event
DSI	Data Subscriber Interface
DSIOS	Data Subscriber Interface Operating System
DSL	Digital Subscriber Line; also called a BRI Basic Rate Interface
DSLC	Digital Subscriber Line Concentrator
DSLINIT	DSL Initialization
DSM	Direct Signaling Message
DSN	Defense Switched Network
DSO	One 64 Kilobit Per Second Channel of A T1 Line
DSP	Digital Signal Processor
DSS	Digital Switching System
DSS	Direct Station Selection
DSS	Display Station Set
DSSC	Dual Serial Data Channel
DST	Destination Bus
DSTC	Digital Serving Test Center
DSTT	Direct Signaling Translation Test
DSU	Digital Service Unit
DSU1-CONF	Digital Service Unit 1 - Conference Circuits
DSU2	Digital Service Unit Model 2
DSUCOM	Digital Service Circuit Unit - Common
DSUG	Digital Service Circuit Unit (With Global Functions)
DSUL	Digital Service Circuit Unit (With Local Functions)
DSX	Digital Cross-Connect (Frame)
DT	Basic Digital Terminal
DT	Destination Type
DT	Data Transport
DTA	Dial Through Announcement
DTD	Dial Tone Delay
DTDA	Dial Tone Delay Alarm
DTE	Data Terminating Equipment
DTF	Dial Tone First
DTF	Digital Transmission Facility
DTGS	Direct Trunk Group Selection
DTMF	Dual Tone Multifrequency
DTO	Decentralized Toll Office
DTP	DAS/C Terminal Process
DTQ	Delay Treatment For Queuing
DTR	Data Terminal Ready
DTSA	Linecard Register That Assigns GIDB Time Slot To D-Channel
DTT	Digital Transmission Terminals
DTTTL	Dial Transfer To Tandem Tie Line
DTU	Digital Trunk Unit
DU	Design Unit
DUC	Dual Access Utility Circuit
DUE	Detection of Unauthorized Equipment
DUIC	Direct User Interface Controller
DUP	Data User Part
DVO	Data Voice Office
DXD	Digit By Digit Analysis

Copyright © 2006 Lucent Technologies

3.5 E

Acronym	Definition
E&M	Ear And Mouth
EA	Emergency Action
EA	Equal Access
EA	Error Analysis
EA	Exchange Access
EA	Extended Address Bit
EACK	Channel Error Acknowledge
EADAS	Engineering And Administrative Data Acquisition System
EADAS/NM	Engineering and Administrative Data Acquisition System For Network Administration
EADAS/NORGEN	EADAS/Network Operations Report Generator
EAEO	Equal Access End Offices
EAI	Emergency Action Interface
EAMF	Equal Access Multifrequency
EAN	Equipment Access Network
EAP	Elevated Audit Process
EARN	Equipment Access Relay Network
EARN	Equipment Action Interface
EAS	Exchange Access Signaling
EAS	Extended Area Service
EB	Event Buffer
EC	Electronic Console
EC	External Data Link Communication Package
ECA	Exchange Carrier Association
ECB	Echo Cancellation Boards
ECD	Equipment Configuration Database
ECD/SG	Equipment Configuration Data (Or Database) / Service Groups
ECDGEN	Equipment Configuration Data Generation Program
ECDMAN	Equipment Configuration Data Manager
ECH	Echo Canceled Hybrid
ECIS	Embedded CCIS Protocol
ECIS6	Embedded Common Channel Office Signaling
ECO	Emergency Change Over
ECP	Engineering Change Procedures
ECP	Executive Control Processor
ECR	Emergency Call Record
ECT	Equipment Configuration Table
ECTD	Expanded Call Type Determination
ECTP	Evaluation Control Terminal Process
ECU	Echo Cancellation Unit
EDAC	Enhanced Digit Analysis And Collection
EDBMH	External Data Base Message Handler
EDLCP	External Data Link Communication Package
EDS	EPSCS Data Switch
EDS CND	
EDSL	Extended Digital Subscriber Line
EE	Execution Environment
EF&I	Engineered, Furnished And Installed
EFS	Error Free Second
EIC	Exchange Identification Code
EIH	Error Interrupt Handler
EIRS	Expanded In-Band Ringback Signal Generation
EIS	Expanded Inband Signaling
EIS	External Information Systems
EKTS	Electronic Key Telephone Service
ELI	Electric Line Interface
ELIGI	Enhanced Limited Intragroup ICLID
ELP	Encode Level Point
ELS	Electronic Loop Segregation
ELT	Emergency Load Transfer
EM	Electromechanical
EMB	Engineering Methods Bulletin
EMC	Electromagnetic Compatibility
EMI	Electro-Magnetic Interference
EML	Expected Measured Loss
EMM	Expanded Main Memory

Copyright © 2006 Lucent Technologies

EMMP	Enhances Message Module Processor
EMP	Electro-Magnetic Pulse
EMS	Effective Mass Filter
EMSP	Enhanced Modular Signal Processor
EMTR	Equipment Manufacturing Testing Requirements
EN	Equipment Number
ENFIA	Exchange Network Facilities For Interexchange/Interstate Access
EO	End Office
EOATA	End Office Access Trunk Arrangement
EOC	End Of Call
EOS	Extended Operating System
EOT	End Of Tape/Transfer
EPH	Enhanced Protocol Handler
EPIC	Engineering Purchased Integrated Circuits
EPLS	Emergency Priority Line Service
EPO	Enhanced Professional Office
EPROM	Erasable Programmable Read Only Memory
EPS	Equipment Product Schematic
EPSCS	Enhanced Private Switched Communication Service
EPSM	Equipment Product Schematic For Manufacture
EQL	Equipment Location Number
EQSTAT	Equipage State Field In RC View
ER	Equipment Report
ER	Error Register/Request
ERA	Error Analysis Register
ERL	Echo Return Loss
ERROR	Linecard Register That Signals GIDB Errors
ES	Errored Seconds
ESA	E911 Service Adjunct
ESAC	Electronic Switching Assistance Center
ESB	Emergency Service Bureau
ESC	Enhanced Services Complex
ESCO	Emergency Service Central Office
ESD	Electrostatic Discharge
ESN	Emergency Service Number
ESP	Engineering Specification Practices
ESP	Enhanced Services Provider
ESP	Essential Service Protection
ESP	External Security Password
ESPOTS	Extended Super Plain Old Telephone Service
ESR	Error Source Register
ESSX	Private facilities feature which emulates a PBX in the 5ESS-2000 Switch
EST	Equipment Status Table
ET	Exchange Terminator/Termination
ETN	Electronic Tandem Network
ETS	Electronic Tandem Switching
ETS/ETN	Electronic Tandem Switch/Electronic Tandem Network
EUO	???
EWD	End With Disconnect
EV	Administrative Event Reporting
EX	Exercise
EXC	Execute
EXT	Extension
EXT	External
E_BIT	Busy/Idle Bit In A Time Slot

3.6 F

Acronym	Definition
FA	Fault Recovery
FA	Firmware Administration
FAs	Feature Activators
FAC	Facility Administration And Control
FAC	Feature Assignment And Construction
FACCS	Facility Associated Common Channel Signaling
FACMS	Firmware Administration Change Management System
FACS	Facility Assignment Control System
FADS	Feature Access During Speech

Copyright © 2006 Lucent Technologies

FAP	Feature Activation Point
FARPID	Far Process Identification
FAS	Facility Associated Signaling
FBDB	Free Buffer Descriptor Blocks
FBI	Feature Button Inspect
FB-ICOM	Feature Button Intercom
FCD	Feature Code Dialing
FCG	False Cross And Ground
FCOS	Far Class Of Service
FCS	Frame Check Sequence
FCT	Firmware Coordination Team
FCU	Format Control Unit
FDB	Feature Data Base
FDM	Frequency Division Multiplexing
FDMA	Frequency Division Multiple Access
FDS	Feature Design Specification
FDX	Full Duplex
FEDT	Far-End Data Tone
FEM	Front End Menu
FENPA	Far End Numbering Plan Area (Far End Area Code)
FEV	Far End Voice
FFU	Fuse Filter Unit
FG	Failure Group
FG	Foreground (Peripheral Control)
FGB	Feature Group B
FGBOL	Feature Group B Originating LATA
FGC	Feature Group C
FGD	Feature Group D
FGDOL	Feature Group D Originating LATA
FI	Facilities Interface
FI	
FIB	Find Indicator Bit
FIC	Film Integrated Circuit
FICU	Fault Insertion Control Unit
FID	Feature Identifiers
FIDB	Facilities Interface Data Bus
FIFO	First-In First-Out
FIM	Fiber Interface Module
FIP	File Inquiry Processor
FIPS	Facility Interface Processors
FIRM	Firmware Subsystem
FISU	Fill-In Signal Unit
FIT	Failure In Time (Typically 10E9 Device Hours)
FIT	Fully-Initializing Terminal
FIU	Facilities Interface Unit
FLT	Fault
FLT	Fault Locating Terminal
FLTRCV	Fault Recover
FLZ	Find Low Zero
FM	Feature Model
FM	File Management/Manager
FMC	Force Management Centers
FNSI	Forward Number Specific Information
FONL	Force On Line
FP	Fast Pump
FP	Feature Processor
FP	Frame Pointer
FP	Fuse Panel
FPC	Foundation Peripheral Controller (Part Of MSGS)
FPCCON	Foundation Peripheral Controller Configuration
FPCH	Foundation Peripheral Controller Handler
FPFH	Fast Pump Facility Handler
FPI	Full Process Initialization
FPID	Far Process Identification
FPS	Forms Processor System
FPSP	Fast Pump System Process
FPT	Functional Pack Test
FPTP	Fast Pump Terminal Process
FPU	Fuse Panel Unit

Copyright © 2006 Lucent Technologies

FR	Fault Recovery
FRCD	Forced Active
FRL	Facility Restriction Level
FRMR	Frame Reject Response
FRP	Fault Recovery Program
FRPH	Frame Relay Protocol Handler
FRS	Feature Requirements Specification
FRS	Flexible Route Selection
FSK	Frequency Shift Keying
FSM	Finite State Machine
FSN	Forward Sequence Number
FSR	Frequency Select Ringing
FSTT	Finite State Transition Table
FTAM	Form Translation And Mapping
FTB	Facility Test Bus
FTP	Feature Terminal Process
FTS	Federal Telecommunication System
FTS	Field Test Set
FTS/NRA	Federal Telecommunications/Number Remote Access
FU	Fan Unit
FW	Firmware
FWA	Full Wave Average
FWCLI	Firmware Change Level Indicator
FX	Foreign Exchange
FX-ROTL	Foreign Exchange Lines For The Remote Office Test Line

3.7 G

Acronym	Definition
GD	Global D Channel
GDA	Global Data Area
GDATA	Global Data
GDB	General Deactivation Procedure
GDS	Gated Diode Switch
GDSF	Global Digital Services Facility
GDSU	Global Digital Service Unit
GDU	Global Design Unit
GDX	Gated Diode Crosspoints
GDXAXS	GDX Access
GDXC	Gated Diode Crosspoint Compensator Pack
GDXCTRL	Gated Diode Crosspoint Access
GEN	General Registers
GFAS	General Feature Access Scheme
GFH	Global Fault Handler
GFM	Global Function Module
GIDB	Group Interface Data Bus (For ISLU)
GL	Global Symbol
GLAU	High Level Access Unit
GLG	General Line Group
GLIB	Generic Library
GLS	Generalized Line Signaling
GLU	General Line Unit
GMOS	Group Manager Operator Services
GNP	General Numbering Plan
GNPO/T	General Numbering Plan Originating/Toll
GNPSNI	General Numbering Plan Singular Number Identification
GOP	Global Overload Process
GPD	Group Partitioned Data
GPDB	General Purpose Buffer Descriptors
GPIC	Group Primary Carrier
GPIM	Global Position Interface Module
GPITS	General Purpose Integrated Test System
GPIU	General Purpose Interface Unit
GPORT	Global Port
GRASP	Generic Access Program (Or Package)
GRASPIM	Generic Access Program For The Interface Module
GRCV	Growth Recent Change Verify
GREP	Global Regular Expression Print

Copyright © 2006 Lucent Technologies

GROW	GROWth Equipage State
GRSP	Global Routing System Process
GSDB	Grid Summary Scan Data Block
GSL	Gas Surge Limiter
GSM	Global Service Module
GSS	Global System Status
GTEI	Group Terminal Endpoint Identifier
GTG	General Trunk Group
GTG	Generalized Tone Generation
GTT	Global Title Translation
GTU	General Trunk Unit

3.8 H

Acronym	Definition
H/M	Hotel/Motel
HBIS	Hotel Billing Information System
HCC	Hardware Change Committee
HCISLU	High Capacity Integrated Services Line Unit
HCMICU	High Capacity Message Interface And Clock Unit
HCMSGS	High Capacity MSGS
HD	High Day
HDBH	High Day Busy Hour
HDFI	Host Digital Facilities Interface
HDLC	High Level Data Link Control
HEX	High Energy Crosspoint
HG	Half Group
HIC	Hybrid Integrated Circuit
HILO	High-Low Technique
HILVL	High Level
HINIT	Hardware Initialization
HLAU	High Level Access Unit
HLDA	Hold Acknowledge
HLL	High Level Language
HLSC	High Level Service Circuit
HM	Hotel Motel
HMIRA	Human Machine Input Request Administration
HMKP	Human Machine Kernel Process
HMSIP	Human Machine Spooler Input Process
HNPA	Home Numbering Plan Area
HOBIC	Hotel Billing Information Center
HOBIS	Hotel Billing Information System
HOC	Host Collector
HP	Hard Pulse
HP	Hi Priority
HSC	High Level Service Unit
HSM	Host Switching Module
HSR	Hardware Status Register
HSSDS	High Speed Switched Digital Service
HST	Hashsum Tables
HSU	High Level Service Circuit Unit
HTE	Hardware Test And Evaluation
HTLU	High Traffic Line Unit
HTP	Host Interface Module Terminal Process
HTR	Hard to Reach
HTT	Hardware Troubleshooting Tools
HTU	High Level Test Unit
HU	Hardware Units
HW	Hardware
HZ	Hertz Cycles Per Second

3.9 I

Acronym	Definition
I	Information
I.110	CCITT Reference: General Structure Of I Recommendations
I.120	CCITT Reference: Integrated Services Digital Networks

Copyright © 2006 Lucent Technologies

I.320	CCITT ISDN Protocol Reference Model Description
I.411	CCITT ISDN User-Network Interfaces Reference
I.430	CCITT ISDN Layer 1 (Physical Layer) Specification
I.431	CCITT Primary Rate Layer 1 (Physical Layer) Specification
IA	Ineffective Attempt
IA	Intraexchange
IAD	Integrated Access Distributor
IAM	Initial Address Message
IAN	Integrated Analog Network
IAPXITS	Integrated Test System INTEL Processors
IAR	Immediate Access Random Access Memory
IB	Instruction Buffer
IBDN	Individual Billing Directory Number
IBHC	Input Buffer Head Cell
IBNS - R2	International Billed Number Screening - Release 2
IC	InterLATA Carrier
IC	Incoming Call
IC	Integrated Circuit
IC	Interexchange Carrier
IC	Interorganization Coordination Team
ICAD	Initialization And Configuration Administration
ICAI	Idle Call Appearance Inspect
ICAN	Individual Circuit Analysis
ICB	Incoming Calls Barred
ICF	Inter-LATA Carrier Form
ICI	Incoming Call Identification
ICI	ISDN Call Identification
ICL	Inserted Connection Loss
ICL	Inter Cluster Link
ICLID	Incoming Call Line Identification
I-CNAM	ISDN Calling Name for BRI
I-CNIS	ISDN Calling Number Identification Services
ICON	Initialization Control
ICS	Inmate Calling Services
ICT	Incoming Trunk
ICVC	International Card Vertification Center ID
ID	Immediate Dial
ID	Individualized Dialing
IDAS	Integrated Routing Assignment System
IDB	INWATS Database
IDC	Integrated Digital Capability
IDCU	Integrated Digital Carrier Unit
IDDD	International Direct Distance Dialing
IDE	Initial Development Environment
IDEAS	Integrated Digital Extension For Analog Switches
IDL	Interoffice Data Link
IDLC	Integrated Digital Loop Carrier
IDN	Integrated Digital Network
IDP	Individualized Dialing Plan
IDPI	Internal Data Path Identifier
IDS	Interconnection Design System
IDS	Interprocessor Data Synchronization
IDT	Integrated Display Terminal
IE	Information Element
IE	Input Equipment
IE	Interexchange
IEC	Interexchange Carrier
IEDS	ISDN Electronic Directory Service
IFMH	Interflow Message Handler
IGC	Inter-Gateway Circuits
IH	Interrupt Mask
IHA	Incremental Hardware Addition
IIA	Interrupt Inhibit Administrator
IIGW	Inter-ISM Gateway
IITS	Interactive Integrated Test System (Formerly STS)
IM	Immediate Mode (RC)
IM	Input Message
IM	Integrity Monitor
IM	Interface Module (now SM)

Copyright © 2006 Lucent Technologies

IM	Interrupt Mask
IM-OM	Input And Output Message Manuals
IM-REXS	Interface Module Routine Exercise Scheduler
IM/OM	Input Manual/Output Manual
IMBP	Interface Module Backup Process
IMC	Interface Module Cabinet
IMC	Interface Module Control Cabinet
IMLT	Integrated Mechanized Loop Testing
IMP	Improved Module Processor
IMP	Interface Module Processor
IMPU	Interface Module Processor Unit
IMR	Initial Modification Request
IMS	Interprocess Message Switch
IMST	Interface Module System Test
IMT	Inter-Module Trunk
IN	Initialization
INA	Integrated Network Arrangement
INADS	Initialization And Administration System
INC	International Carriers
IND	Indication
INETS	Interim NETS
INFORM	Information
INH	I/O Inhibit
INIT	Initialization
INIT	Initiate
INOP	Inward Operator
INPA	Interchangeable NPA
INSEP	Incoming Separation Class
INV	Direct-To-Alternating Current Inverter
INV	Inverter (Disk)
INVTR	Inverter
INWATS	Inward Wide Area Telecommunications Service
IOC	International Operator Center
IODRV	Input/Output Driver
IOMI	Input/Output Microprocessor Interface
IOMM	Input/Output Message
IOP	Input/Output Processor
IOPC	Input/Output Peripheral Controller
IORN	I/O Read (Active Low)
IOS	Improved Outpulsing Service
IOWN	I/O Write (Active Low)
IP	ISDN Interworking Unit Port
IP	Improved Pump
IP	In Progress
IP	Intelligent Peripheral
IP	Initialization Processor
IPC	Inter-Process Communication
IPL	Initialization Processor Load
IPM	Interruptions Per Minute
IPS	Interrupts Per Second
IPWS	Interactive Planning Work Station
IR	Interrupt Request
IREG	Integrated Range Extension With Gain
IRN	Integrated Ring Node
IRQ	Invalid Request For Supplementary Service
IS	Information Separator
IS	Interrupt Set Register
IS	Interrupt Source
ISAT	ISDN Attendant
ISC	Intelligent Serial Controller
ISC	International Switching Center
ISCN	Integrated Services Channel Number
ISD	International Subscriber Dials
ISDN	Integrated Services Digital Network
ISDN-UP	Integrated Services Digital Network User Part (Of CCITT7)
ISDNBASE	ISDN Base Code Loadable Package.
ISDNBRCS	ISDN BRCS Code Loadable Package
ISDRT	Integrated Services Digital Remote Terminal
ISDS	Incremental Software Development System

Copyright © 2006 Lucent Technologies

ISLC	Integrated Subscriber Loop Carrier
ISLU	Integrated Services Line Unit
ISLU2	Integrated Services Line Unit - 2
ISLUBASE	ISLU Base Code Loadable Package
ISM	Integrated Services Module (outdated acronym)
ISN	Integrated Services Network
ISP	Intermediate Switching Point
ISPA	Integrated Services Port Administrator
ISPF	Interactive Session Productivity Facility
ISSN	Integrated Special Services Network
ISTF	Integrated Services Test Facility
ISU	Identification Service Unit
ISU	Initial Signal Unit
ISUP	Integrated Services - User Part
IT	Intertoll
ITE	Installation Test Equipment
ITIME	OSDS Time Relative To OSDS Init
ITLH	(2 Wire) Incoming Trunk Loop, Hook
ITLM	(2 Wire) Incoming Trunk Loop, Metering
ITP	Interaction Test Plan
ITS	Integrated Test System
IU	Interface Unit
IUB	Interface-Unit Bus
IUI	Integrated User Interface
IXC	Inter-Exchange Carrier

3.10 J

Acronym	Definition
JF	Junctor Frame

3.11 K

Acronym	Definition
KA	Knowledge Access
KAM	Knowledge Access Model
KB	Knowledge Base
KB/S	Kilobits Per Second
KBPS	Kilobits Per Second
KCS	Key Control Service
KDB	Kernel Debugger
KHZ	Kilohertz
KM	Kilometer
KP	Key Pulse
KPCB	Kernel Process Control Block
KSR	Keyboard Send/Receive
KSU	Key Service Unit
KTTP	Keying Trunk Terminal Process
KW	Key Word

3.12 L

Acronym	Definition
LABS	LATA-Wide Business Service
LAC	Loop Assignment Center
LACT	Local Customer Administration Terminal
LADT	Local Area Data Transport
LAMA	Local Automatic Message Accounting
LAN	Local Area Network
LAP	Link Access Protocol
LAPB	Link Access Protocol B
LAPD	Link Access Protocol D
LASS	Local Area Signaling Services
LATA	Local Access And Transport Area
LAU	Link Adapter Unit (Was AAU)
LBRA	Line Battery Reversal On Answer

Copyright © 2006 Lucent Technologies

LC	Last Call
LC	Line Card Of The ISLU
LC	Line Controller
LC	Loop Closure
LCAMOS	Loop Cable Administrative And Maintenance Operations System
LCAS	Local Customer Administration System
LCC	Line Class Code
LCCB	Logical Channel Control Block
LCEN	Line Card Equipment Number
LCI	Local Call Intercept
LCIE	Lightguide Cable Interconnect Equipment
LCP	Linked Call Processing
LCR	Least Cost Routing
LCSN	Lower Chip Select
LCU	Link Controller Unit
LD	Long Duration (Call)
LD	Loop Disconnect
LDC	Long Duration Call
LDFT	Load Disk From Tape
LDG	Logical Device Group
LDI	Logical Device Identification
LDIN	Logical Device Identification Number
LDIT	Local Digit Interpreter Table
LDMC	Loop Data Maintenance Center
LDN	Listed Directory Number
LDS	Lesson Development System
LDSU	Local/Logical Digital Service Unit
LDSUB	Local Digital Service Unit Bus
LDSUF	Local Digital Service Unit Feature
LE	Link Establishment (Message)
LEC	Local Exchange Carrier
LED	Light Emitting Diode
LEN	Line Equipment Number
LF	Line Forwarding
LG	Line Group
LGC	Line Group Controller
LGP	Line Group Power Board
LHT	Long Holding Time
LI	Link Interface
LIB	Link Interface Bus
LIC	Line Interface Circuit
LICON	Link Interface Configuration
LIDB	Line Interface Data Bus
LIDB	Line information data base
LIGI	Limited Intra-group ICLID
LIM	Link/Local Interface Module
LIT	Line Insulation Test
LIU	Line Interface Unit
LL	Logical Link
LLA	Low Level Access
LLCB	Logical Link Control Block
LLID	Logical Link Identifier
LLM	Logical Link Map
LLN	Line-Link Network
LLP	Line Link Pulsing
LLSC	Low Level Service Circuits (AC)
LLSCU	Low Level Service Circuit Unit
LM	Link Map
LMDRS	Local Message Detail Recording System
LML	Line Maintenance Lists
LMOS	Loop Maintenance Operations System
LMR	Load Modification Request
LN	Link Node
LNI	Line Interface (Cabinet Or Frame)
LO	Local Office
LONAL	Local Off-Network Access Line
LOS	Loss Of Signal
LOSL	Line Out Of Service List
LOT	Loader Option Tape

Copyright © 2006 Lucent Technologies

LOTS	Load Originating Test System
LP	Logical Port
LP	Logical Processors
LP	Loopback
LPCDF	Low Profile Conventional Distributing Frame
LPE	Logical Procedure Error
LPIC	Line Primary Carrier
LPID	Logical Port ID
LPR	Last Party Release (An MFC Signal)
LPT	Load Process Team
LRSP	Local Routing System Process
LS	Link Set
LS	Listing Services
LSI	Loop Side Interface
LSI	Loop Supervision Incoming
LSM	Local Switching Module
LSO	Loop Start Outgoing
LSO	Loop Supervision Outgoing
LSOS	Language Specific Operator Services
LSR	Line Signaling Repeater
LSSU	Link Status Signal Unit
LSU	Local Storage Unit
LSU	Lone Signal Units
LSV	Line Status Verifier
LT	Line Termination
LT	Line Trunk Frame
LTA	Load Transfer Acknowledgement
LTATA	Local Tandem Access Trunk Arrangement
LTD	Local Test Desk
LTD	Local Traffic Diversion
LTOSL	Line Temporary Out Of Service List
LTP	Line Test Position
LTP	Line Trunk Peripheral Cabinet
LTP	Local Test Position
LTP	Logical Test Port
LTR	Load Transfer Request
LTS	Loop Test Start
LTSB	Line Time Slot Bridging
LTT	Long Term Tone
LU	Line Unit
LU-81	1981 Line Unit
LU-83	1983 Line Unit
LUC	Line Utilization Check
LUCHAN	Line Unit Channel Circuit
LUT	Line Under Test
LUTS	Locked-Up Trunk Scan
LV1ERR	Level 1 Error
LV2ERR	Level 2 Error
LV3ERR	Level 3 Error
LVL1ERR	Level 1 Error
LVL2ERR	Level 2 Error
LVL3ERR	Level 3 Error
LW	Leave Word
LWC	Leave Word Calling
LWC-IO	Leave Word Calling - Incoming/Outgoing
LWC-O	Leave Word Calling - Outgoing

3.13 M

Acronym	Definition
M	Mandatory
M	Miscellaneous Cabinet
MA	Main Store Array
MA	Milli-Ampers
MAAP	Maintenance And Administration Panel
MAC	Memory Administration Center (See RMAC)
MAC-4	BELLMAC-4 Microcomputer
MAC-OSS	Machine Administration Center - Operation Support System

MAJ	Metallic Access Junctors
MALU	Miscellaneous Analog Line Unit (Now MLU)
MAN	Manual
MAN	Metallic Access Network
MAR	Microstore Address Register
MAS	Main Store
MAS	Module Alarm System
MASA	Main Store Array
MASB	Main Store Bus
MASC	Main Store Controller
MASDU	Metallic Access Scan Distribution Unit
MASK	Linecard Register For Masking Out Errors Noted By ERROR Register
MASM	Main Store Module
MASU	Main Store Update
MASUB	Main Store Update Bus
MATT	Matcher And Transfer Tracer
MAU	Metallic Access Unit
MAUUI	Message Associated User-to-user Information
MAX	Metallic Access
MBKS	Multibutton Key System
MBPS	Megabits Per Second
MC	Maintenance Circuit
MC	Master Control
MC	Microcode Number For Firmware Products
MC	Modular Communications
MC	Module Controller
MC68000	Micro Computer Type 68000
MCA	Misrouted Centralized Automatic Message Accounting
MCA	Module Circuit Administrator
MCA	Multiple Call Appearances
MCB	Maintenance/Message Control Block
MCB	Module Control Bus
MCBA	MCB Array
MCBI	MCB Index
MCC	Maintenance (Master) Control Center
MCC	Master Control Center
MCC/ROP	Master Control Center Receive Only Printer
MCH	Maintenance Channel
MCO	Manual Changeover
MCR	Modular Capability Request
MCRT	Master/Maintenance Cathode Ray Tube/Terminal
MCS	Memory Chip Select
MCS	Message Command System
MCS	Microcontrol Store
MCS	Microprocessor Call Simulator
MCS	Module Conversion Specification
MCT	Malicious Call Trace
MCTF	Malicious Call Trace On Flash
MCTSI	Module Controller/Time Slot Interchange
MCTSIU	Module Control And Time Slot Interchanger Unit
MCTU	Module Controller And TSI Unit
MCTUFR	Module Controller and TSI Unit Fault Recovery
MCU	Module Control Unit
MCW	Memory Card Writer
MD	Message Delivery
MD	Module Declaration (File)
MD-PH	Message Delivery Protocol Handler
MDB	Message Buffer Data Blocks
MDCT	Logical Device Record
MDCT	Minor Device Chain Table
MDF	Main Distributing Frame
MDII	Machine Detected Interoffice Irregularities
MDL	Management Data Link
MDL	Message Definition Language
MDL	Message Delivery Data Link
MDM	Modular Data Module
MDM	Modular Digital Modem
MDR	Message Detail Recording
MDR-CP	Message Detail Recording To Customer's Premises

Copyright © 2006 Lucent Technologies

MDSL	Multiplexed Digital Subscriber Line
MEAS	Measurements
MEAU	Module Elevated Audits (Process)
MECCA	Mechanized Evaluation Of Call Completion Anomalies
MECH	More Efficient Call Handling
MEM	Memory
MEMB	Multi-Line Hunt Group Member
MES	Message
MET	Multibutton Electronic Telephone
MEU	Memory Expansion Unit
MF	Memorandum For File
MF	Message Forwarder
MF	Multi-Frequency
MFC	Modular Feature Construction/Customization
MFC	Multifrequency Code/Compiler
MFKP	Multifrequency Key Pulsing
MFOS	Multifunction Operations System
MFOSS	Multifunctional Operations Support System
MFRI	Multifrequency Ringing Interface
MFT	Metallic Facility Terminal
MH	Manual Hold
MH	Message Handler
MH2	Metro Hub 2
MH3B	3B Message Handler
MHD	Moving Head Disk
MHDC	Moving Head Disk Control
MHDD	Moving Head Disk Drive
MHDD/C	Moving Head Disk Data Clock
MHDI	Moving Head Disk Interface
MHZ	Mega-Hertz
MI	Maskable Interrupt
MI	Message Interface
MIB	Message Interface Bus
MIC	Message Insertion Circuit
MICO	Module Integrity Control
MICO	Module Integrity Controller
MICON	Message Interface Configuration
MICU	Message Interface Clock Unit
MICU	Message Interface Control Unit
MICU/TMS	Message Interface Clock Unit/Time Multiplexed Switch
MICU2	Message Interface/Clock Unit, Model 2
MID	Module Identifier
MIM	Miscellaneous Interface Module
MIP	Maintenance In Progress
MIP	Micro Interface Program
MIPTG	Multiple internal protocol trunk groups
MIR	Microinstruction Register
MIS	Management Information System
MIS	Microstore
MIS	Module Interface Specification
MISC	Miscellaneous Frame
MJ	Major Alarm
MKDSK	Make Disk Process
MLG	MTSO Load Generation Software
MLG	Miscellaneous Line Group
MLG	Multi Line Group
MLHG	Multi-Line Hunt Group
MLHGMN	Multi-Line Hunt Group Member Number
MLI	Message Link Interface
MLOS	Multi-Lingual Operator Services
MLPP	Multi-Level Precedence Preemption
MLT	Mechanized Loop Test System
MLT-2	Mechanized Loop Testing System Generation 2
MLTS	Micro Level Test Set
MLTS/MIP	Micro Level Test Set/Interface Program
MLTSI	Micro Level Test Set Interface
MLU	Miscellaneous Line Unit
MM	Multi Metering
MM	Multi-Module

Copyright © 2006 Lucent Technologies

MM-REXC	Multi Module Routine Exercise Controller
MMGR	Memory Manager
MMJ	Major Alarm
MML	CCITT Human-Machine Language Used For 5ESS - Operator Interaction
MMP	Module Message Processor (Part Of SM And MSGS)
MMPCON	Module Message Processor Configuration
MMPH	Module Message Processor Handler
MMRSM	Multi-Module Remote Switching Module
MMST	Multi-Module System Test
MMSU	Modular Metallic Service/Switch Unit
MMT/C	Meet Me Teleconferencing
MMU	Multimessage Unit
MN	Minor Alarm
MNTACC	Maintenance Acknowledge Command
MNU	Message Not Understood
MOD	Module
MOD-CONT	Module Controller
MODCONT	Modular Controller
MOFI	Module Only Full Initialization
MOJ	Metering Over Junction
MOR	Manual Over Ride
MOS	Metal Oxidized Silicone
MOS	Module Operation System
MOSI	Module Only Selective Initialization
MOUT	Microprocessor Data (T-Interface Output)
MP	Modem Pool
MP	Module Processor
MPC	Message Peripheral Controller
MPCI	Message Peripheral Controller Interface
MPDAV	Module Processor Data Available
MPI	Module Processor Interface
MPI	Multiple Protocol Handler Images
MPOTP	Modem Pool Originating Terminal Process
MPREQ	Module Processor Request
MPSC	Multi-Protocol Serial Controller
MPTP	Modem Pool Terminal Process
MPTP	Monitoring Position Terminal Process
MPTTP	Modem Pool Terminating Terminal Process
MPU	Module/Message Processor Unit
MPUP	Module Packet Unloading Process
MRAU	Module Routine Audits (Process)
MRD	Message Retrieval Display
MRF	Maintenance Reset Function
MS	Measurements
MS	Message Switch
MS	Mobile Stations
MSA	Microstore Address Bus
MSB	Message Sampling Board
MSC	Message Service Center
MSC	Message Switch Controller
MSC	Mobil Switching Centers
MSCU	Message Switch Control Unit
MSCU2	Message Switch Control Unit - Model 2
MSCUCON	Message Switch Control Unit Configuration
MSD	Message Sequence Diagram
MSD	Microstore Data Bus
MSDRV	Message Switch Driver
MSG	Message
MSG	Message Switch
MSG2	Message Switch, Model 2
MSI	Message Service Indicator
MSKP	Message Switch Kernel Process
MSL	Mapping Specification Language
MSL	Mode Select Logic
MSM	Message Switch Maintenance
MSPC	Message Switch Peripheral Controller
MSPP	Message Switch Peripheral Processor
MSPU	Message Switch Peripheral Unit
MSS	Message Service System

Copyright © 2006 Lucent Technologies

MSU	Master Scanner Unit
MSU	Message Signal Unit
MSU	Metallic Service Unit
MT	Magnetic Tape Unit
MTB	Manual Toll Board
MTB	Metallic Test Bus
MTC	Magnetic Tape Controller
MTCB	MTC Bus
MTCE	Maintenance
MTG	Miscellaneous Trunk Group
MTI	Maintenance Interface
MTI	Message Transport Interface
MTIB	Metallic Test Interconnect Bus
MTP	Message Transfer Part
MTP	Metallic Test Pair
MTP	Monitor Terminal Process
MTS	Message Telephone Service
MTS	Message Time Slot
MTSO	Mobile Telephone Switching Office
MTTF	Manual Test Trunk Function
MTTP	Manual Trunk Test Panel
MTTR	Mean Time To Restore
MTTST	Manual Transmission Testing
MTTY	Maintenance Teletypewriter
MTTY PC	Maintenance Teletype Peripheral Controller
MTTYC	MTTY Controller
MTTYPC	Maintenance Terminal Peripheral Controller
MTU	Metallic Test Unit
MTU	Miscellaneous Trunk Unit
MU	Master Unit
MUCSO	Multi-Channel Software Oscilloscope
MUM	Multi Unit Message
MUPH	Multiple Position Hunt
MUPHQ	Multiple Position Hunt With Queuing
MUX	Multiplexer
MVDT	Maintenance VDT
MVP	Multiline Variety Package
MW	Multiway Calling
MWC	Multiway Calling Modular
MWI	Message Waiting Indicator

3.14 N

Acronym	Definition
NAC	Network Access Control
NAC	Network Administration Center
NAC	Normalized Area Code
NAIL-UP	Assign Time Slots Permanently Connected
NAIU	Network Access Interface Unit
NAL	Network Access Lines
NAM	Number Acknowledge Message
NANP	North American Numbering Plan
NAP	Name Private
NAQ	Network Autoquote
NC	Network Clock
NC	Network Control Sub-Subsystem
NC	No Circuit
NCA	Network Control Analysis
NCAI	Non-Idle Call Appearance Inspect
NCCON	Network Clock Configuration
NCD	Network Call Denial
NCEO	Non-Conforming End Office
NCLK	Network Clock
NCMU	Network Clock And Message Unit (Now MICU)
NCP	Network Control Point
NCPE	Network Control Point Emulator
NCSP	Network Control System Process
NCT	Network Control And Timing

Copyright © 2006 Lucent Technologies

NCT	Network Control And Timing Link
NCTE	Network Channel Terminating Equipment
NCU	Network Clock Unit
NEL	Next Event List
NED	Network Entity Discriminator
NEMOS	Network Management Operations Support System
NEN	
NESS	Network Element Services Signaling
NETCOM	Network Committee On Operations And Maintenance
NETS	Nationwide Emergency Telecommunications System
NETSTAR	Network Subscriber Transaction Administrative And Recording System
NG	No Good
NHCMS	Nonhost CMS
NI	National ISDN or Network Interconnect
NI-2	National ISDN-2
NI-3	National ISDN-3
NIM	Network Indication Message
NISDN	National (or Standard) ISDN
NIT	Non-Initializing Terminal
NITS	Non-Interfering Integrated Test System
NLI	Network Link Interface
NM	Network Management
NMA	Network Management Administration
NMC	Network Management Center
NME	Non-Correctable Memory Error
NMI	Nonmaskable Interrupt
NN	National Number
NNDA	Name Number Display Allowed
NNP	Name Number Private
NOC	Normalized Office Code
NP	Node Processor
NPA	Numbering Plan Area
NPD	Numbering Plan Digit
NPM	N-Channel Performance Monitor
NR	Number Received
NRA	Network Remote Access
NRAI	Network Remote Access International
NRM	Network Resource Module
NRP	Network Routing Processor
NRZ	Nonreturn To Zero
NS	Number Services
NSEP	Network Switching Engineering Practice
NSP	Number Services Position
NT	Network Terminal
NT-1	Network Termination Type 1
NT1	Common Carrier Side Network Terminal (Interface)
NT2	Subscriber Side Network Terminal (Interface)
NTC	Network Control And Timing Link
NTP	Non Test Procedures
NTR	No Tests Run
NTS	Network Time Slot
NTTMP	Network Trunk Transmission Measurement Plan
NTU	Notification To Use
NU	Noninterfering Unit
NU	Number Unobtainable
NUI	Network User Identification
NUTS	Nonusage Trunk Scan
NXX	Office Code (Part Of Dialed Number)

3.15 O

Acronym	Definition
O&M	Operations And Maintenances
OA	Operator Actions
OA&M	Operations, Administration, And Maintenance
OAC	Operator Speed Of Answer Consistency
OAMSSR	Operations, Administration, And Maintenance Switching System Requirements
OAP	OSPS Administrative Processor

OAS	Operator Assignment Schedule
OAT	Operator Assignment Tables
OAU	Office Alarm Unit
OC	Overload Control
OCB	Outgoing Calls Barred
OCDN	Original Called Directory Number
OCF	Outward Calling Features
OCL	Operator Communications Link
OCM	Originating Call Model
OCN	SS7 Original Called Number parameter
ODA	Office Data Administration System
ODA	Office Data Assembler
ODB	Office Data Base
ODB	On Demand B-channel
ODBE	Office Data Base Editor
ODD	Office Dependent Data
ODID	Operator Dialing Identifier Digit
ODIN	On Line Data Integrity System
ODL	Optical Data Link
ODL-50	A Pair Of 45Mb/s Optical Data Links
ODP	Office Dialing Plan
OECC	Operator Entered Class Of Charge
OEN	Originating Equipment Number
OF	Office Records
OFC	Office Code
OFIDs	Optioned Feature System IDs
OFL	Off Line
OFR	Office Records
OFS	Optioned Feature System
OGT	Outgoing Trunk
OHD	Off-Hook Delay
OHI	Off-Hook Immediate
OID	Operator Login Identification
OIL	Open Items List
OILD	Overwrite Incremental Loader
OIM	Originating Interface Module
OIT	Operator Interrupt Time
OIU	Office Interface Unit
OKP	Operational Kernel Process
OKTR	Operator Keyed Trouble Report
OLI	Originating Line Identity
OLP	Overlap Outpulsing
OLS	Originating Line Screening
OM	Output Message
OMC	Outgoing Manual Call
OMS5E	Office Monitoring System For The 5ESS Switch
OMUP	Operation And Maintenance Part (Of Signaling System 7)
ONAL	Off-Network Access Line
ONI	Operator Number Identification
ONL	On Line
ONPA	Originating Numbering Plan Area
ONTC	Office Network And Timing Complex
OOAMSSR	Operations Administration And Maintenance Switch System Requirements
OOB	Out Of Band
OOC	Overlap Originating Controller
OOF	Out Of Frame
OOS	Out Of Service
OOSF	Out Of Service Family Of Equipment
OOSFE	Out Of Service Family Of Equipment
OP	Operate Abstract Device
OP	Operation
OP	Originating Point
OP	Output
OPC	Office Point Code
OPC	Operator Position Circuit/Controller
OPC	Origination Point Code
OPER	OPERational Equipage State
OPIC	Operator Position Interface Circuit
OPOR	Output Port

Copyright © 2006 Lucent Technologies

OPR	Off-Line Printer
OPS	Operator Position Subsystem
OPSP	Off-line Pump System Process
OPT	Operator Position Terminal
OPTP	Off-line Pump Terminal Process
OPTP	Operator's Position Terminal Process
OPVC	Operator Position Voice Circuit
ORB	Office Repeater Bay
ORIG	Originating
ORIG-TP	Originating Terminal Process
ORM	Optically Remote Module (outdated acronym)
OROP	Originating Operator
ORS	Operator Response Simulator
ORTA	Operator Routing And Terminal Allocation
OS	Operator Service
OS	Operating System
OS	Origination Scanner
OSAC	Operator Speed Of Answer Consistency
OSC	Operator Service Center
OSC	Operator Services Capability
OSC	Origination Scan Control
OSCS	Operator Services Class Selector
OSDC	Operator Special Dialed Codes
OSDD	Operations Systems Deliverable Documentation
OSDS	Operating System For Distributed Switching
OSDS-C	Operating System For Distributed Switching - Central Processor
OSDS-M	Operating System For Distributed Switching - Interface Module
OSDS-P	Operating System For Distributed Systems - Protocol Handler
OSM	Originating Switch Module
OSN	Operations Support Network
OSO	Operator Services Office
OSO	Originating Screening Office
OSPID	Operating System Process Identification
OSPS	Operator Services Position System
OSS	Off-Line Support Systems
OSS	Operational Support System
OSSIM	Operational Support System Simulator
OST	Operating System Trap
OST	Originating Station Treatment
OSU	Operator Services Unit
OT	Originating Treatment
OTDX	Originating Toll Digital Exchange
OTLH	(2 Wire) Outgoing Trunk Loop, Hook
OTLM	(2 Wire) Outgoing Trunk Loop, Metering
OTP	Originating Terminal Process
OTRP	Operator Trouble Report Printer
OTTS	Outgoing Trunk Transmission System
OUTWATS	Outward Wide Area Telecommunications Service
OV	Overload Subsystem
OVFL	Overflow
OVR	Overflow
OW	Order Wire
OWS	One Week Schedule
OWT	Operator Work Time

3.16 P

Acronym	Definition
P/AR	Peak To Average Ratio
P48	Parallel Bus With 48 Leads
PA	Program Address
PA	Program Application
PABX	Private Automatic Branch Exchange
PAD	Packet Assembler/Disassembler
PAD	Physical Address
PADL	Page Descriptor Language
PAGS	Paging Supervisor
PAL	Programmed Arrays Of Logic

Copyright © 2006 Lucent Technologies

PAM	Process Administration Module
PAM	Pulse Amplitude Modulation
PAR	Program Address Register
PAS	Protected Application Segment
PAT	Position Acknowledge Timeout
PAT	Position Assignment Table
PAU	Power And Alarm Unit
PB	Packet Bus
PBHC	Peak Busy Hour Calls
PBI	Peripheral Bus Interface
PBP	Packet Bus Port
PBU	Peripheral Bus Unit
PBX	Private Branch Exchange
PC	Peripheral Controller Subsystem
PC	Port Control
PC	Position Controller
PC	Primary Center
PC	Procedures (Capability Unit)
PC	Program Change
PC-BGS	Peripheral Control - Background Scheduler
PC-FGS	Peripheral Control - Foreground Scheduler
PCADB	Peripheral Control And Data Buses
PCB	Printed Circuit Board
PCB	Process Control Block
PCBI	Process Control Block Index
PCBLA	Process Control Block Link Area
PCC	Circuit Switch Data Capability Control Center
PCC	Paired Country Code
PCC	Peripheral Control Channel
PCC	Peripheral Controller Cabinet
PCC	Portable C Compiler
PCCA	Power Control Cabinet 'A'
PCD	Peripheral Control Data
PCF	Peripheral Control Frame/Facility
PCFD	Power Distribution Cabinet
PCFH	Per Call Fault Handler
PCI	Panel Call Indicator
PCI	Panel Control Indicator
PCITS	Peripheral Controller Integrated Test System
PCM	Pulse Code Modulation
PCO	Plant Control Office
PCOP	Port Camp-on Process
PCP	Process Control Process
PCP	Per Call Privacy
PCPEIH	Error Interrupt Handler
PCPMD	Process Maintenance Driver
PCRID	Processor ID
PCS0	Peripheral Chip Selects 0 To 5
PCS	Personal Communications Services
PCSD	Peripheral Controller Subdevices
PCT	Peripheral Configuration Table
PCTF	Per Call Test Failure
PCU	Position Controller Unit
PD	Path Descriptor
PD	Peripheral Device
PD	Power Distribution
PDB	Private Data Block
PDB	Process Data Block
PDD	Post Dialing Delay
PDDB	Path Data Block
PDF	Page Descriptor File/Filter
PDL	Peripheral Diagnostic Language
PDL/5	Peripheral Diagnostic Language
PDM	Pulse Duration Modulation
PDN	Packet/Public Data Network
PDR	Power Down Request
PDS	Page Descriptor Shell
PDUs	Protocol Data Units
PEATS	Program Evaluation And Test Simulator

Copyright © 2006 Lucent Technologies

PECCA	Palletized Equipment Cabling And Cooling Assembly
PECS	Programmable Electronic Call Simulator
PEH	Peripheral Error Handler
PERFR	Peripheral Fault Recovery
PESA	Peripheral Error Source Analysis
PEX	Public Exchange
PF	Packet Fanout
PF	Power Feeder
PF	Printout Follows
PF	Private Facility
PFA	Private Facilities Access
PFAT	Partial Feature Access Tandem
PFEO	Partial Feature End Office
PFI	Physical Fault Insertion
PFR	Peripheral Fault Recovery
PFT	Power Failure Transfer
PFX	Prefix Index
PG	Pair Gain
PGS	Pair Gain System
PGTC	Pair Gain Test Controller
PGV	Pair Gain Vehicle
PH	Parity High
PH	Path
PH	Physical Layer
PH	Protocol/Packet Handler
PHA	Protocol Handler for Asynchronous Transfer Mode
PH4	Protocol Handler 4
PHDB	Path Data Block
PHDB	Protocol Handler Data Bus
PHPCP	Protocol Handler Pump Control Process
PHPUMP	Protocol Handler Pump Software In Protocol Handler
PHV	Protocol Handlers for Voice
PI	Central Processor Intervention
PI	Packet Interface
PI	Peripheral Interface
PI	Program Index
PI	Protocol Interpreter
PI	Packet Interface
PIB	Packet Interconnect Bus
PIC	Peripheral Interface Controller
PIC	Polyethylene Insulated Conductor (Wire Cable)
PIC	Primary Carrier
PIC	Priority Interrupt Controller
PIC2	Presubscribed Intra-LATA PIC/Intra-LATA Toll Carrier.
PICB	Peripheral Interface Control Block
PICB	Peripheral Interface Control Bus
PICOM	Packaging And Interconnection Committee
PICRT	Peripheral Interface Controller Routing Table
PICS	Plug-In Inventory Control System
PICS/DCPR	Plug-In Inventory Control System/Detailed Continuing Property Record
PID	Process Identification
PIDB	Peripheral Interface Data Block
PIDB	Peripheral Interface Data Bus
PIDENT	Program Identification
PIM	Position Interface Module (outdated acronym)
PIN	Personal Identification Number
PINIT	Processor Initialization
PIO	Peripheral I/O Sub-Subsystem
PIP	Plug-In Processor
PIPUMP	Pump Software For Packet Interface
PIR	Program Interrupt Request
PISO	Parallel In Serial Out
PIT	Page Information Table
PK	Program Supplementary Information
PL	Parity Low
PL	Purchase Limit
PLBQ	Purchase Limits Balance Quotation
PLI	Peripheral Link Interface
PLIT	Prohibit Line Insulation Test

Copyright © 2006 Lucent Technologies

PLL	Phase Locked Loop
PLOCK	Process Lock
PM	Path Map
PMJ	Power Major Alarm
PMMP	Pumped Module Message Processor
PMP	Path Movement Protocol
PMS	Picturephone Meeting Service
PMT	Path Map Table
PMU	Precision Measurement Unit
PNDP	Private Network Dialing Plan
PNGW	Packet Network Gateways
PNI	Private Network Interface
PNS	Private Network Services
POC	Peripheral Object Conversion
POCSI	Plain Old Circuit-Switched ISDN Call (Also Known As PODS)
PODS	ISDN Equivalent Of POTS (Also Known As POCSI)
POP	Point Of Presence
POPS	Plain Old Position Seizure
PORTLA	Port Linkage Area
POTS	Plain Old Telephone Service
PP	Port Processor
PPB	Permanent Packet B Channel Packet Switching
PPC	Pump Peripheral Controller
PPCCON	Pump Peripheral Controller Configuration
PPM	Periodic Pulse Metering
PPMCOM	PPM Common Circuit
PPMDB	Periodic Pulse Metering Data Block
PPMU	Periodic Pulse Metering Unit
PPR	Pulse Point Register
PPS	Pulse Per Second
PPSDN	Public Packet Switched Data Network
PPSN	Public Packet Switch Network (Formerly LADT)
PRAM	Protected Random Access Memory
PRC	Primary Rate Carrier
PRE	Protectional Reservation Equipment
PRI	Primary Rate Interface
PRI	Private Rate Interface
PRM	Primitive
PRM	Process Recovery Message
PROC	Processing
PROCALL	Programmable Call Simulator
PROCNO	Process Number
PROCOL	Programmable Call Generator
PROM	Programmable Read Only Memory
PROMUS	Prompt Remotely Operated Memory Updating System
PRR	Post Recovery Report
PRR	Previously Rerouted
PRR	Processor Replacement Retrofit
PRT	Path Record Table
PRX	Processor Controlled Exchange
PS	Packet Services
PS	Protocol Subsystem
PSA	Project Standard Attribute (File)
PSAP	Public Safety Answering Point
PSBR	Primary Segment Base Register
PSD	Position Status Display
PSD	Processor Scanner And Signal Distributor
PSDI	Parallel Serial Data Interface
PSDN	Packet Switched Data Network
PSDP	Circuit Switch Digital Capability Data Port
PSDS	Public Switched Digital Services
PSE	Program Store Enable
PSIU	Packet Switch Interface Unit
PSK	Phase Shift Keying
PSM	Position Switching Module
PSM	Power Switch Monitor
PSN	Private Switch Network
PSN	Public Switch Network
PSPD	Partial Signal/Partial Dial

Copyright © 2006 Lucent Technologies

PSPD	Permanent Signal Partial Dial
PSPDN	Packet Switched Public Data Network
PSPP	PSIU Pump Process
PSS	Packet Switching Service
PSTN	Public Switched Telephone Network
PSU	Packet Switch Unit
PSU-2	Packet Switch Unit - 2
PSUCOM	Packet Switch Unit Common Controller
PSW	Program Status Word
PT	Program Timer
PTC	Port Control Sub-Subsystem
PTP	Position Terminal Process
PTRDB	Pointer Data Block
PTS	Per Trunk Signaling
PTSB	PIDB Time Slot Block
PU	Peripheral Units
PU	Pick Up
PU	Power Unit
PU	Program Update
PUC	Peripheral Unit Controller
PUCDL	Peripheral Unit Controller Data Link
PUCR	Pump Control
PUMPCON	Peripheral Pump Control Software
PUT	Port Under Test
PVC	Permanent Virtual Call/Circuit
PWB	Printed Wiring Boards
PWE	Present Worth Of Expenditure
PWP	Parity/Write Protect
PWR	Power
PWRCONV	Power Converter
PX	Power Cross

3.17 Q

Acronym	Definition
Q	Internal Register
QGP	Quad-Link Gateway Processor
QID	Query Identification
QLI2	Quad-Link Interface Model 2
QOB	Queue On Busy
QPC	Quick Patch Compiler
QRYDB	Query Data Block
QTL	Queuing For Trunk And Lines
QLPS	Quad-Link Packet Switch
QTMS	QLPS TMS
QUANTUM	Easy Reach 700 Calls

3.18 R

Acronym	Definition
R	Release
R	Ring Lead (Of Two Wire Pair)
R-DFI	RSM-Digital Facility Interface
RA	Random Access
RA	Rate Adapt
RA	Recorded Announcement
RA	Release Acknowledge
RA	Remote Access
RA	Resource Allocator
RAC	Rate Center
RADN	Remote Access Directory Number
RAF	Recorded Announcement Frame/Function
RAI	Recorded Announcement Interface
RALU	RAM Arithmetic Logic Unit
RAM	Random Access Memory
RAO	Revenue Accounting Office
RAQ	Rerouted Autoquotes

Copyright © 2006 Lucent Technologies

RAR	Return Address Register
RARAM	Rapid Access RAM
RARAM	Rapid Access Ram
RAS	Remote Alarm Section(Of LAU)
RASB	RISLU Alarm Simulator Box
RASC	Residence Accounting Service Center
RASTP	Remote Alarm Section Terminal Process
RAU	Recorded Announcement Unit
RAU	Remote Alarm Unit
RB	Reverse Battery
RBD	Receive Buffer Descriptor
RBLK	A Read Block Command
RC	Recent Change Subsystem
RC	Remote Concentrator
RC&V	Recent Change And Verify
RC/V	Recent Change And Verify
RC/VFY	Recent-Change And Verify (Subsystem)
RCF	Remote Call Forwarding
RCF	Ringer Continuity Failures
RCI	Routing Control Indicator
RCLK	Receive Clock
RCLK	Remote Clock
RCMAC	Recent Change Memory Administration Center
RCMAS	Recent Change Memory Administration System
RCMAWG	Recent Change Memory Administration Work Group
RCR	Recent Change Report
RCS	Routing Control Service
RCV	Receive
RCV	Recent Change And Verify
RCYC	Ringing Cycles
RD	Read Channel Data Buffer
RDN	Redirecting Directory Number
RDFI	Remote Digital Facility Interface
RDT	Recall Dial Tone
RDT	Remote Digital Terminal
REG	Range Extender With Gain
REJ	Reject
REL	Release
REPT	Report
REQ	Request
REX	Routine Exerciser
RFA	Receive Frame Area
RFD	Receive Frame Descriptor
RG	Register
RG	Ringing Generator (ISLU)
RI	Ring Interface
RI	Route Index
RIAR	Reduce Input Acceptance Rate
RIM	Remote Interface Module (Now RSM)
RIMPCH	RIM PC Handler
RINT	Read Channel Interrupt State
RISLU	Remote Integrated Services Line Unit
RL	Release Link
RL	Repeat Later
RLA	Remote Link Administration
RLI	Remote Link Interface
RLT	Release Link Trunk
RLTCS	Release Link Transfer With Call Splitting
RLTD	Routine Line Test Dispatcher
RM	Feature Remoting Subsystem
RM	Recall Message
RMAC	Remote Memory Administration Center
RMAP	Remote Memory Administration Position
RMAP/ST	Remote Memory Administration Position/Smart Terminal
RMAS	Recent Change Memory Administration System
RMAS	Remote Memory Access System
RMC	Remote Maintenance Console
RMP	Remote Maintenance Processor
RMS	Remote Monitoring System

Copyright © 2006 Lucent Technologies

RMS-D	Remote Measurement System (Digital)
RMT	Remote Maintenance Terminals
RMU	Rotate Mask Unit
RMU	Remote Measurement Unit
RMV	Remove
RN	Redirecting Number
RND	Redirecting Number Delivery
RNDIS	Receive Disable (Active Low)
RNPCM	Receive Pulse Code Modulation
RNR	Receiver Not Ready
RO	Residential Origination
ROH	Receiver Off Hook
ROM	Read Only Memory
ROP	Receive/Read Only Printer
ROPC	Remote Operator Position Controller
ROS	Request Out Of Service
ROSE	Remote Operations Service Element
ROTL	Remote Office Test Line
ROTS	Rotary Out Trunks Selector
RP	Resistor Panel
RP	Radio Port
RPA	Remote Protocol Access
RPAM	Receive Pulse Amplitude Modulation
RPC	Ring Peripheral Controller
RPCM	Read Block Of Peripheral Controller RAM
RPCU	Radio Port Control Unit
RPE	Remote Procedure Error
RPI	Return To Point Of Interrupt
RPLY	Reply
RPM	Remote Packet Module
RPN	Relative Path Number
RPOA	Registered Private Operating Agency
RPSM	Remote Position Switching Module
RPTERR	Report Handler
RQIP	Request In Progress
RR	Receiver Ready
RR	Reroute
RR	Route Relay
RRM	Recall Rejection Message
RRM	Routing Request Message
RRP	Rate And Route Pattern
RRR	Reduce Route Request
RS	Receive Synchronizer
RS	Ring To Silent
RSD	Route Status Display
RSM	Remote Switching Module
RSR	Read Channel Service Request
RSS	Receive Signal State Bits
RSS	Remote Switching System
RST	Channel Status Register
RST	Restore To Service
RSTN	Reset Input To 80188
RSU	Remote Switching Unit
RT	Remote Terminal
RT	Residential Termination
RT	Routing And Terminal Allocation
RTA	Remote Trunk Arrangement
RTA	Routing And Terminal Allocation Subsystem
RTAC	Regional Technical Assistance Center
RTC	Real Time Clock/Counter
RTD	Remote Traffic Diversion
RTD	Round Trip Delay
RTI	Return From Interrupt
RTI	Route Index
RTIME	OSDS Time Relative To Switch Init
RTKD	Respond To Key Data
RTRE	Real-Time Rating External
RTRS	Real Time Rating System
RTS	Real Time Status Report

Copyright © 2006 Lucent Technologies

RTS	Remote Test System
RTS	Request To Send (RS232 Lead)
RTSP	Real Time Status Process
RTTD	Routine Trunk Test Dispatcher
RTTU	Remote Trunk Test Unit
RTU	Right to Use
RU	Receive Unit
RVB	Reverse Battery
RVPT	Revertive Pulsing Transceiver
RVT	Revertive (Signaling)
RWC	Remote Wire Center
RX	Remote Exchange
RXO	Remote Exchange Office
RY	Recovery

3.19 S

Acronym	Definition
S	Setup
S/N	Signal To Noise Ratio
SA	Service Area
SA	Service Assistant
SA	Setup Acknowledge
SA	System Administrator
SAB	Subaccount Billing
SABM	Set Asynchronous Balance Mode
SABM	Stand-Alone Billing Memory
SABME	Set Asynchronous Balance Mode Extended
SABMR	Set Asynchronous Balance Mode Restricted
SAC	Scan Applique Circuit
SAC	Service Access Codes
SAC	Special Area Code
SAC	Store Address Control
SAIS	Semi-Automatic Intercept System
SAP	Service Access Point
SAP	System Alarm Process
SAPI	Service Access Point Identifier
SAR	Store Address Register
SARD	Systems And Requirements Data Base
SARTS	Switch Access Remote Test System
SAS	SAS (Subscriber Alerting Signal) is standard call waiting tone
SAS	Service Announcement System
SAS	Stop And Switch
SASS	Switching Administration Support System
SAT	Store Address Translation
SAU	Secure Access Unit
SBAC	Station Billing Of Attendant Handled Calls
SBC	Single Board Computer
SBR	Segment Base Register
SBR	Standby-Ready
SC	Sectional Center
SC	Series Completion
SC	Service Code
SC	Speed Call
SC	Stable Clear
SC/A	Signal Converter/Allotter
SC/SD	Scanner And Signal Distributor
SC/SDA	Scan And Distribute Administrator
SCA	Shared Call Appearance
SCAD	Subscriber Changeable Abbreviated Dialing
SCANS	Software Change Administration And Notification System
SCB	Stack Control Block
SCBI	SCB Index
SCC	Specialized Common Carriers
SCC	Switching Control Center
SCCOF	Selective Customer Control Of Facilities
SCCP	Signaling Connection Control Part
SCCS	Source Code Control System

Copyright © 2006 Lucent Technologies

SCCS	Switching Control Center System
SCD	System Capability Description
SCF	Selective Call Forwarding
SCH	Serial Channel
SCN	Service Circuit Node
SCNR	Scanner Ring
SCNT	Scanner Tip
SCO	Switch Cut Off
SCOCS	Selected Class of Call Screening
SCOP	System Campon Process
SCOPS	Small Centralized Operator Position System
SCOTS	Surveillance And Control Of Transmission Systems
SCP	Service Control Point SCPN
SCR	Selective Call Rejection
SCR	Store Control Register
SCR	System Capability Recommendation
SCSD	Scanner And Signal Distributor
SCT	Special Confirmation Tone
SCT	Subscriber Call Termination
SCT	Subscriber Carrier Terminal
SCU	Signal Conversion Unit
SCU	System Control Signal
SD	Schematic Drawing
SD	Service Description
SD	Signal Distributor
SDA	Selective Distinctive Alert
SDC	Store Data Control
SDE	Segment Descriptor Entry
SDH	Subdevice Handler
SDHMM	Subdevice Handler Multi Mod
SDHSM	Subdevice Handler Small Office
SDL	Signaling Data Link
SDL	Specification And Description Language
SDL	Synchronous Data Links
SDL-SM	Signaling Data Link Switching Module
SDL/GR	Specification And Description Language/Graphic Language
SDL/PR	Specification And Description Language/Program Language
SDLC	Synchronous Data Link Controller
SDLT	Supplementary Digital Line-Trunk Frame
SDM	Space Division Module
SDN	Software Defined Network
SDN	Switched Digital Network
SND/NRA	Software Defined Network/Number Remote Access
SDOC	Selective Dynamic Overload Control
SDP	Software Demand Paging
SDP	Software Development Process
SDR	Store Data Register
SDRBLK	A Subdevice Read Block Command
SDS	Shared Data Segment
SDSC	Synchronous Data Set Controller
SDSI	SLC-96 Digital Facility Interface
SDST	Software Development System Test
SDT	Special Dial Tone
SDU	Scan And Distribution Unit
SDWBLK	A Subdevice Write Block Command
SE	Service Evaluation
SE	System Engineering
SEC	Service Evaluation Center
SECM	Subscriber Expensive Call Monitoring
SECPT	Security Printer Terminal
SEED	Self Electro-Optic Effect Devices
SEP	Signaling End Point
SEQ	Sequence Data
SETID	Set Identifier
SF	Single Frequency
SF	Status Field
SFG	Simulated Facility Group
SFI	STSX-1 Facility Interface
SFID	Secured Feature ID

Copyright © 2006 Lucent Technologies

SG	System Generation Database
SGD	Semi Global Data Area
SGD	System Generation Database
SGDB	Service Group Data Block
SGEN	System Boot Image Builder For DMERT
SGRO	Special GROwth Equipage State
SGS	Software Generation System
SH	Start Hunt
SHDN	Shared DN
SHT	Short Holding Time
SI	Screening Index
SI	Screening Interface
SI	Shelf Interface
SI	Software/System Integrity Subsystem
SI	Subscriber Incompatible
SI	System Initialization
SI	System Integration
SI	System Integrity Subsystem
SI0	Sequenced Information Zero Frames
SI1	Sequenced Information One Frames
SIB	Subunit Interface Bus
SIC	STS Interface Circuit
SIC	Service Indicator Code
SICO	Switch/System Integrity Controller
SICO	System Integrity Control
SIF	Signaling Information Field
SIGI	Signaling Irregularities
SILC	Selective Incoming Overload Control
SIM	Switch/System Integrity Monitor
SIO	Signaling Information Octet
SIOC	Selective Incoming Overload Control
SIP	Single In-Line Package
SIP	Spooler Input Register
SIPO	Serial In Parallel Out
SIPS	System Integrity For Packet Switching
SIR	Store Instruction Register
SISO	System Integrity Control
SIT	Shared Interoffice Trunk
SIT	Special Information Tones
SIU	Synchronous Interface Unit
SL	Signaling Links
SLA	Signaling Link Available
SLA-EP	Signaling Link Available Emergency Proved
SLA-NP	Signaling Link Available Normally Proved
SLATS	Selected Lines And Trunks System
SLATTS	Selected Line And Trunk Translations
SLC	Signaling Link Code
SLC	Subscriber Loop Carrier/Concentrator
SLC-96	Subscriber Loop Carrier
SLC-RT	Subscriber Loop Carrier Remote Terminal
SLD	Special Long Distance
SLEN	SLC-96 Line Equipment Number
SLG	Standard Line Group
SLIC	Subscriber Line Interface Circuit
SLI	STS-1 Link Interface
SLIM	Subscriber Line Instrument Measuring Circuit
SLIM	Subscriber Loop Instrument Measurements
SLIM	Subscriber Loop Interface Module
SLIM2	Subscriber Line Interface Measurement 2
SLINE	Supplementary Line Frame
SLM	Signaling Link Management
SLM	Synchronous Line Module
SLMC	Signaling Link Management Control
SLP	Single (Physical) Link Procedures
SLPC	Synchronous Link Peripheral Controller
SLS	Signaling Link Selection field
SLT	Signaling Link Terminal
SLT	Supplementary Line Trunk Frame
SLU	Signaling Link Unavailable

Copyright © 2006 Lucent Technologies

SLU	Standard Line Unit
SM	Swap Message
SM	Switch Maintenance (Subsystem)
SM	Switching Module
SM2K	Switching Module 2000
SMARS	Switch Maintenance Analysis And Recovery Strategies
SMAS	Switch Maintenance Access System
SMC	Switch Maintenance Control
SMCT	Standing Malicious Call Trace
SMDR	Station Message Detail Recording
SMER	Switch Maintenance Error Recognition
SMEST	Switch Maintenance Equipment Status Table
SMETDS	Standard MSG Trunk Design System
SMFC	Semi-Compelled Multifrequency Signaling
SMH	Signaling Message Handler
SMICO	Switch Maintenance Integrity Controller
SMIM	Switch Maintenance For The Switching Module
SMKP	Switch Maintenance Kernel Process
SMMP	Service Module Message Processor (Part Of MSGS)
SMMS	Switch Maintenance For The Message Switch
SMP	Switching Module Processor
SMPU	Switching Module Processor Unit
SMS	Service Management System
SMS	Station Management System
SMS	Switch Maintenance Subsystem
SMS	Symbol Management System
SMSI	Simplified Message Service Interface
SMST	SM System Test
SND	Single Number Dialer
SNM	Signaling Network Management
SNU	Signal Not Understood
SO	Service Observing
SOC	Service Observing Circuit
SOCG	Service Order Control Group
SOEC	Service Order Entry Center
SONDS	Small Office Network Data System
SOP	Service Observation Position
SOP	Service Order Processor
SOP	Spooler Output Process
SOS	Subscriber Out Of Service
SOST	Special Operator Service Traffic
SP	Signal Processor
SP	Signaling Point
SPB	Supplementary Protocol Block
SPC	Signaling Point Code (CCITT7)
SPC	Stored Program Control
SPCL	Special
SPCS	Stored Program Control System
SPH	Session Protocol Handler
SPID	Service Profile Identifier
SPL	Sound Pressure Level
SPM	Subscriber Private meter
SPN	Scan Point Number
SPO	Special Overlay Register
SPO	System Process Operations
SPOOL	Simultaneous Peripheral Operations On-Line
SPOTS	Super Plain Old Telephone Service
SPP	Single Process Purge
SPSU	Signal Processor And Switch Unit
SPYDER	Synchronous/Asynchronous Protocol Data Formatter
SQAP	System Quality Assurance Plan
SQD	Supplemental Query Data Query
SR	Silent To Ring
SR	Station Restriction
SRA	Standby-Ready Acknowledgement
SRA	Switching Resource Allocator
SRAM	Static Random Access Memory
SRAT	Stability Run Analysis Team
SRC	Processor Source Bus

Copyright © 2006 Lucent Technologies

SRC	Software Recovery Control
SRDY	Synchronous Ready
SREG	Special Register
SRG	Sleeve Ring Ground
SRL	Singing Return Loss
SRM	Shared Resource Monitor
SRM	Signaling Route Management
SROD	Service Restriction in the Outgoing Direction
SS	Special Screening
SS	Sub System
SS7	Signaling System 7
SSAP	Session Service Access Point
SSB	Special Service Board
SSBR	Secondary Source Base Register
SSC	Special Service Center
SSC	Subsystem Coordinator
SSD	Software Subsystem Description
SSN	Subsystem Number
SSP	Service Switching Point
SSP	Small System Processor
SSP800	Service Switching Point For Basic 800 Service
SSR	System Status Register
SSU	Special Service Unit
SSU	Subsequent Signal Unit
ST	Serving Team
ST	Signaling Terminal
ST	Start
ST-PH	Signaling Terminal Protocol Handler
STA	Synchronous Terminal Adapter
STAT	Status
STAT MUX	Statistical Multiplexing
STBY	Standby
STC	Serving Test Center
STD	Subscriber Toll Dialing
STE	SONET Termination Equipment
STEP	Signaling Transfer and End Point
STF	Some Tests Fail
STFU	Switching Transmission Facility Unit
STG	Standard Trunk Group
STGR	Structural Growth Rate
STIU	Switching Transmission Interface Unit
STLWS	Supplementary Trunk And Line Work Station
STM	Signaling Traffic Management
STMS	Supplementary Time Multiplexed Switch
STORM	Standard Transmission Rate for Optically Integrated Remote Switching Module
STP	Signal Transfer Point
STP	Stop
STPC	Signaling Transfer Point Code
STPH	Signaling Terminal Protocol Handler
STQDB	Serving Team Queue Data Block
STR	Selective Trunk Reservation
STR	Send to Resource
STRM	Signaling Traffic And Route Management
STRM_SP	STRM System Process
STS	Software Test System (Presently IITS)
STS	Subscriber Test Station
STS-1	Synchronous Transport Signal
STSX-1	STS-1 Electrical Interface
STSY	SDL/PR Translation System
STU	Standard Trunk Unit
SU	Service Unavailable
SU	Signal Unit
SU	Slave Unit
SU	Software Update
SU	System Update/Generic Retrofit
SUIB	Subunit Interface Bus (Connects SMP & TSIU)
SUPLN	Supplementary Line
SUPR	System Update Procedure
SUSN	Signal Unit Sequence Number

Copyright © 2006 Lucent Technologies

SUT	Switch Under Test
SVI	Service Intercept
SW	Software
SW	Switch
SW	Switch Maintenance
SWC	Six Way Calling
SWEST	Switch Maintenance Equipment Status Table
SXS	Step-By-Step (Switching System)
SYS	System
SYU	Synchronization Signal Unit

3.20 T

Acronym	Definition
T	Terminal
T	Tip Lead (Of Two Wire Pair)
T&A	Toll And Assistance
T&C	Time & Charge
T&M	Talk And Monitor
T&R	Tip And Ring (The Two Local Telephone Wires)
T-LINK	Test Bus (Metallic Link)
T1	24-Channel Digital Carrier
T1FAC	T1 Facility
TA	Telecommunication Administrations
TA	Terminal Adaptor
TA	Test And Access
TA	Toll And Assistance
TAA	Transfer Allowed Acknowledgement
TAC	Test Access Circuit
TAF	Test Analysis Filter
TAMA	Message Detail Recording On Tie Trunks
TAP	Terminal Allocation Process
TAP	Toll & Assistance Position
TAP	Transaction Amount Parameter
TAPE	Tape Drive
TAS	Test Access Slot
TAT	Termination Attempt Trigger
TAU	Test Access Unit
TB/IS	Transaction Block/Integrity System
TBCU	Test Bus Control Unit
TBCU	Trunk Bus Control Unit
TBD	Transmit Buffer Descriptor
TBN	True Billing Number
TC	Teleconferencing
TC	Terminal Controller
TC	Time And Charges
TC	Toll Center
TC	Transaction Capability (CCITT No. 7)
TC	Transient Clear
TC/SC	Transient Or Stable Clear
TCA	Telephone Company Administration
TCAP	Transaction Capabilities Application Part
TCAP	Translation Capabilities Application Protocol
TCB	Timer Control Block
TCBC	To Change
TCBH	Time Consistent Busy Hour
TCBU	Test Bus Control Unit
TCF	Test Call Facility
TCM	Terminating Call Model
TCM	Time Compression Multiplexing
TCM	Traveling Class Mark
TCOC	Traffic Change-Over Control
TCP	Test Control Process
TCS	Terminating Code Screening
TCS	Test Control System
TCT	Toll Connecting Trunks
TCU	Tape Control Unit
TDAS	Traffic Data Administration System

Copyright © 2006 Lucent Technologies

TDATA	Transmit Data
TDB	Task Data Block
TDCLK	Transmit Data Clock
TDCU	Traffic Data Collection Unit
TDM	Time Division Multiplex
TDMA	Time Division Multiple Access
TDN	Time Division Network
TDS	Traffic Data System
TDTP	Traffic Diversion Terminal Process
TDVS	TCM Data Voice Subscriber
TDX	Toll Digital Exchange
TE	Terminal Equipment
TE1	Terminal Equipment Type 1 (ISDN)
TE2	Terminal Equipment Type 2 (Non-ISDN)
TEC	Test Equipment Control Terminal Process
TECTP	Test Equipment Control Terminal Processes
TEI	Terminal Endpoint Identifier
TEMP	Temporary Register
TEN	Terminal Equipment Number
TEN	Trunk Equipment Number
TERA	Trunk Error Report Analysis
TF	Transmitter Formatter (PIDB Interface)
TFA	Transfer Allowed
TFC	Toll Fraud Control
TFC	Transmission Fault Control
TFIU	Transmission Facility Interface Unit
TFOS	Transparency Feature Optioning System
TFP	Transfer Prohibited (SS7 Signal)
TFS	Trunk Forecasting System
TFU	Treated Facilities Unit
TG	Terminal Group
TG	Translation Guide
TG	Trunk Group
TGBL	Trunk Group Busy Lamps
TGI	Terminal Group Identifier
TGN	Trunk Group Number
TGSR	Terminal Group and Station Restrictions
TI	Timer
TIC	Termination Of Interexchange Calls
TIC	Translation Integrity Check
TICB	T Interface Core Breadboard
TID	Tuple Identifier
TIDB	Transmission Interface Data Buses
TIE	Time Interval Error
TIM	Terminating Interface Module
TIM	Treated Interface Module
TIRKS	Trunks Integrated Records Keeping System
TITAN	Transmission Impairment Testing and Analysis
TIU	Treated Interface Unit
TKG	Trunk Group
TKO	Trunk Offering (Service)
TKS	Terminal Key System
TL	Test Logic
TLA	Tuple Level Access
TLDI	Toll Digit Translation Index
TLI	Tool Location Independence
TLM	Trouble Locating Manual
TLM	Trunk And Line Maintenance
TLN	Trunk Link Network
TLP	Transmission Level Point
TLP	Trouble Locating Procedure
TLPR	Trouble Locating Process
TLTP	Trunk And Line Test Position
TLWS	Trunk And Line Work Station
TLWS/MT	Trunk And Line Work Station Metallic Test
TM	Task Manager
TM	Terminal Maintenance
TMCU	Time Multiplexed Control Unit
TMDF	Trunk Main Distributing Frame

Copyright © 2006 Lucent Technologies

TMEH	Terminal Maintenance Exception Handler
TTMS	Time Multiplexed Switch
TMS2	Time Multiplexed Switch Model 2
TMSC	Time Multiplexed Switch Control
TMSCON	Time Multiplexed Switch Configuration
TMSCU	Time Multiplexed Switch Control Unit
TMSGU	TMS Growth Unit
TMSLNK	TMS NCT L-Link
TMSMC	TMS Maintenance Control
TMSP	TMS Processor
TMSU	Time Multiplexed Switch Unit
TMT	Traffic Management
TMTP	Terminal Maintenance Terminal Process
TMUX	Transmission Multiplexer
TN	Telephone Number
TN	Telephone/Terminating Number
TNDS	Total Network Data System
TNEN	Transmit Enable (Active Low)
TNET	Transport Network
TNOP	Total Network Operations Plan
TNS	Transit Network Selection
TOAD	Tools Access Data Base
TOD	Time Of Day
TOLD	Toll Diversion To Attendant
TORC	Time Of Day Originated Recent Change
TOS	Trunk Out Of Service
TOSL	Trunks Out Of Service List
TP	Task Processor
TP	Terminal Process
TP	Test Positions
TP	Toll Point
TP	Trunk Processor
TPAM	Transmit Pulse Amplitude Modulation
TPC	Teleprocessing Controller
TPDF	Tie Pair Distribution Frame
TPT	Test Progress Tone
TPR	Terminating Point Restriction
TPRE	Terminating Point Restrictions Expansion
TR	Technical Reference
TR	Trunk Reservation
TRA	Terminal Resource Allocator
TRBL	Trouble
TRCC	T-Carrier Restoration Control Center
TRCLSI	Translation Routine Class Of Service Information
TRD	Timed Release Disconnect
TRF	Traffic
TRMT	Transmit
TRR	Tip Ring Reversal
TRS	Telecommunications Relay Service
TRXS	TCM Remote Exchange Subscriber
TS	Time Slot
TS16	Time Slot 16
TSA	Time Slot Assign
TSAP	Transport Service Access Point
TSDB	Time Slot Data Blocks
TSI	Time Slot Interchange
TSI	Traffic Service Index
TSIU	Time Slot Interchange Unit
TSM	Time Slot Multiplexer
TSO	Toll Switch Operator
TSP	Traffic Service Position
TSPS	Traffic Service Position System
TSS	Time Sharing System
TSS	Time Slot Set
TSS	Trunk Servicing System
TSSR	Toll Switch System Requirement
TSSS	Toll Switching System Specification
TST	Time - Space - Time
TSTK	Test Trunk

Copyright © 2006 Lucent Technologies

TT	Telephony/Telegraphy
TT	Terminating Treatment
TT	Touch-Tone
TT	Transmission Test Unit
TT	Trunk Termination
TTC	Test Trunk Circuit
TTC	Timed Talk Cut-Off
TTF	Transmission Test Facility/Function
TTIM	Treated Trunk Interface Module
TTL	Transistor To Transistor Logic
TTMC	Transmission Test And Measurement Control
TTP	Terminating Terminal Process
TTP	Transmission Treatment Process
TTP	Trunk Test Panel
TTR	Trunk Trouble Report
TTS	Test Tone Source
TTTP	Talking Trunk Terminal Process
TTU	Transmission/Trunk Test Unit
TTY	Teletypewriter
TTYC	Teletypewriter Controller
TTYMSG	Teletype Message
TU	Tape Unit
TU	Trunk Unit
TUP	Telephone User Part (Of CCITT7)
TUR	Traffic Usage Recorder
TUS	Test Utility System
TV	Transfer Vector
TWC	Three Way Calling
TWX	Teletypewriter Exchange
TYMSG	TTY Message Subsystem

3.21 U

Acronym	Definition
UA	Unnumbered Acknowledge
UAC	Utility Access Circuit
UALU	Universal Analog Line Unit (See LU)
UART	Universal Asynchronous Receiver Transmitter
UATU	Universal Analog Trunk Unit (See TU)
UAV	Unavailable
UBA	Unblocking-Acknowledgement
UBL	Unblocking
UBM	Unsuccessful Backward Failure Message
UC	Utility Circuit
UCA	Unauthorized Centralized Automatic Message Accounting
UCB	Unit Control Block
UCC	Universal Conference Circuit
UCD	Uniform Call Distribution
UCI	Unified Control Interface Of The ISLU
UCONF	Universal Conference Circuit
UCS	User Control String
UCSN	Upper Chip Select (MCS Signal)
UCT	Utility Call Trace
UDT	Universal Tone Detector
UEQP	Unequipped
UI	Unnumbered Information
UI	User Interface
UID	Utility Identification
ULARP	User Level Automatic Restart Process
ULG	Universal Line Group
UNASN	Unassigned
UNAV	Unavailable
UNEQ	UNEQuipped Equipage State
UNEQUIP	Unequipped
UNICAD	Uniform Computer Aided Design
UNIQ	Uniqueness Field - OSDS
UNR	Uncontrolled Not Ready
UPB	Update Bus

Copyright © 2006 Lucent Technologies

UPNNP	Uniform Private Network Numbering Plan
USART	Universal Synchronous/Asynchronous Receiver/Transmitter
USB	Usage Sensitive Billing
USC	Universal Service Circuit
USEC	Universal Services Echo Canceler
USER	User Side Equipment
USOC	Universal Service Order Code
USS	User Support System
USTWC	Usage Sensitive Three Way Calling
UT	Generic Utility (Subsystem)
UTC	Unified Trunk/Telephone Circuit
UTD	Universal Tone Detector/Decoder
UTG	Universal Tone Generator
UTG	Universal Trunk Group
UTP	Unit Test Plan
UTS	Umbilical Time Slot
UUD	User To User Data Message
UUMD	User-To-User Message Data
UXS	Unexpected Stop Dial

3.22 V

Acronym	Definition
V.110	CCITT Recommendation: V-Interface DTE Support By An ISDN
VAD	Virtual Address
VALNPA	Valid Numbering Plan Area
VALNXX	Valid Office Code
VAR	Variable
VAT	Valid Answer Timing
VAX	Digital Equipment Corporation Super-Mini Computer
VBSC	Variable Broadband Switching Capability
VC	Virtual Call/Circuit
VCDX	Very Compact Digial Exchange
VCO	Voltage Controlled Oscillator
VCOX	Voltage Controlled Oscillator
VCS	Virtual Circuit Switched
VDS	Voice Data Set; Provides Basic ISDN (2B+D) Access
VDT	Video Display Terminal
VDU	Video Display Unit
VER	Verify
VF	Voice Frequency
VFD	Vacuum Fluorescent Display
VFL	Voice Frequency Link
VIOS	Visually Impaired Operator System
VIRGOS	Video Interactive Regional Ordering Specification
VIT	Visible Instruction Table
VLA	View Level Access
VLMM	Very Large Main Memory
VLSI	Very Large Scale Integration
VMS	Voice Messaging System
VMWI	Visual Message Waiting Indicator
VN	Virtual Network (Model)
VNL	Via Net Loss
VPA	Voice Path Assurance
VPATH	View Path
VPN	Virtual Private Network
VQ	Voice Quoted
VRCP	Voice Recognition Call Processing
VSA	Voice Switched Attenuator
VSF	Voice Store And Forward
VSS	Voice Storage System
VT	Virtual Terminal
VT	Virtual Tributary

3.23 W

Acronym	Definition

Copyright © 2006 Lucent Technologies

WATS	Wide Area Telephone Service
WBLK	A Write Block Command
WCA	Write Channel Control/Address Register
WD	Write Channel Data Buffer
WMS	Writable Microstore
WP	Write Protect
WPN	Work Program Number
WS	Wink Start
WSC	Window Status Timer
WSN	Work Station Number

3.24 X

Acronym	Definition
X.21	Circuit-Switched Data Control Protocol For Terminal To Network
X.25	Communications Protocol Used Between MSGS And SM
X.31	CCITT ISDN Packet Mode Terminal Equipment Support Rec.
X.71	X.21 Related Protocol Used Between Circuit-Data Networks
X.75	X.25 Related Protocol Used Between Packet Data Networks
X86	C Compiler For The 8086
XBAR	Crossbar (Switching System)
XID	Exchange Identifier
XIM	Extended Interface Module
XMDR	Expanded Message Detail Recording
XMT	Transmit
XST	Stop Dial Timeout

3.25 Y

Acronym	Definition
YACC	Yet Another Compiler Compiler

3.26 Z

Acronym	Definition
ZCS	Zero Code Suppression
ZS	Zero Suppression

Copyright © 2006 Lucent Technologies

SEC. 7: 5ODA
(5ESS SWITCH-2000 OFFICE DATA ADMINISTRATION)
USERS GUIDE

1. GENERAL

The 5ODA (5ESS-2000 Switch Office Data Administration) System, is software developed by Lucent Technologies to generate the office dependent database for the 5ESS-2000 Switch machine. The steps required in building a 5ESS-2000 Switch database are:

1. Before any processing of office input data can begin, the System Equipment Engineer (the line engineer) must first register the office (Section 5.1 "Office Registration").

2. After the office has been registered, the Operating Company personnel and the line engineer can begin to enter and/or correct the office input data interactively (Section 4.8 "The DE Command"). Through a separate set of procedures, data can be entered in a bulk mode.

3. The database is verified for errors both during and after the data entry process (Section 6.4 "The CROSSCHECK Command").

4. The System Equipment Engineer determines when the MMST (Multi-Module System Test) and SMST (Switching Module System Test) processes need equipment related data, and transmits this data to a support processor at the Oklahoma City Works (Section 6.9 "The SENDIMST Command").

5. Office records are produced both during and after the data entry process (Section 4.14 "The RECORDS Command").

6. Mapping of the office input data into the base relations occurs after data entry is completed and verified (Section 6.6 "The MAPPING Command")

7. Generation of the fully populated Office Dependent Data for the 5ESS-2000 Switch (Section 6.7 "The DBGEN Command").

Certain of the above responsibilities are performed by the Operating Company personnel and some by the Lucent Technologies Line Engineer. For the sake of clarity, the User's Guide addresses each group separately:

- Telephone Company Commands are used by the appropriate Operating Telephone Company organizations, e.g. the line administrator and the trunk administrator.

- Lucent Technologies Commands are used by the Lucent Technologies SEE (Systems Equipment Engineering) organization (the line engineer).

This user distinction is necessary because a number of 5ODA commands are not for general use. They are intended for use only by the Lucent Technologies Line Engineer who has the overall responsibility for the correct generation of the 5ESS-2000 Switch database via the 5ODA system.

2. GENERAL REQUIREMENTS OF THE 5ODA WORK STATION

The 5ODA user connects from his particular work station to the 5ODA computer via the switched telephone network. The 5ODA work station must consist of the following hardware:

Copyright © 2006 Lucent Technologies

2.1 CRT Terminal

ASCII compatible; full duplex; asynchronous; minimum 80 column by 24 line display; direct cursor addressing; from 1200 bps (bits per second) up to 28,800 bps operation, with a clear line and compression 115,000 bps is possible; upper and lower case keyboard; EIA cable interface; interface to and control of an attached hard-copy line printer. Some currently Supported Terminals (attached printer interface):

VT100 - Digital Equipment
TT4425 - Teletype

Some currently Supported Terminals (no printer interface):

VT52 - Digital Equipment
HP2621 - Hewlett Packard

2.2 Line Printer

Required Configuration: attached to and controlled by ASCII terminal; 132 column print line; tractor feed; 1200 bps (bits per second) operation; EIA cable interface; flow control compatible with controlling terminal.

2.3 Data Set and Phone

Required Configuration: either 1200 bps or up to 28,800 bps operation; modulation and signaling compatible with any of the following specifications: ITU-T, V.34, V.32bis, V.32, V.23, V.22bis, V.22, V.21, Bell212A, Bell103J.

2.4 Cables

EIA cables must be provided to connect the CRT terminal, line printer, data set and phone. The length of the cables and the type of connectors (male/female) depend on the equipment selected.

2.5 Terminal and Modem Configuration

The terminal and modem must be configured to communicate with host using ASCII code, no parity, 10 bits per character (1 start bit, 8 data bits, 1 stop bit).

Please refer to the documentation provided with your terminal and printer for your equipment's set-up options.

A complete list of terminal types compatible with the 5ODA system is not contained in this document due to the fact that this list grows weekly. However, a complete list may be obtained when logging onto the 5ODA system. The introductory login session asks the user to enter terminal type. If the carriage return is typed in response to this question, a complete list of all valid CRT terminals will print.

3. ACCESSING THE 5ODA SYSTEM

Before any user may access the 5ODA system, the operating company office must be registered by the Lucent Technologies Line Engineer. This registration procedure is discussed in detail in the Lucent Technologies Systems Equipment Engineer section of this manual (Section 5.1 "Office Registration").

Once the office is registered, the 5ODA user may connect with the 5ODA system currently at Lucent Technologies located at the Network Software Center 5ODA Production Facility in Lisle, Illinois. The user

Copyright © 2006 Lucent Technologies

interacts with this system from a remote work station via 1200 up to 28,800 bps lines using the toll free number:

For the odutsc machine located at the Network Software Center:

1-800-358-3497

The user can also connect to the remote processor through the Datakit® address:

il/cu/odutsc (U.S. Market)

3.1 Logging On To The 5ODA System

If dialing into a processor, the user will be prompted *Enter username>>*.The user types in the login assigned to him by the Lucent Technologies Line Engineer followed by **<return>**. This login consists of a two letter group ID and a six alphanumeric base and control number. The line administration login consists of li+base and control (e.g., li1234d0). The trunk administration login consists of tr+base and control (e.g., tr1234d0). The Lucent Technologies Line Engineer's login consists of we+base and control (e.g., we1234d0). The read only login used by support personnel consists of re+base and control (e.g., re1234d0).

The next step in logging-on is to enter the password. This password should be obtained from the Regional Line Engineer. After logging on to the system, it is advised that the user execute the *password* command to change the password to one of his/her choice.

- **CAUTION:** Password administration varies from machine to machine and each user is responsible for keeping track of his/her own password in a secure place. The password must be used every time the user logs on. The 5ODA administrator does not know the user's password.

Thereafter, every 8 weeks, the password expires and the user will have to choose a new one. This procedure is followed for security purposes. When the password expires, the user will log in and the system will respond *Your password has expired. Choose a new one. New Password:*. The user should then type in a password of his/her choice, at least six characters long. The password does not appear on the CRT screen as it is typed in. The user is asked to type in the password a second time for verification.

The next time and every time thereafter the user logs on, the system prompts with: *Password:* (if the user is connecting to the remote processor through Datakit). If the user has dialed into the system and logged on, the system prompts with: *Enter user password>>.* The password does not appear on the screen as the user types it in for security purposes. If the user makes a typographical mistake during this log-on procedure, the system prompts with: *Login incorrect. login:* (if the user is connected to the remote processor through Datakit), and the user should try again. If the user is logging in through dialup of the 800 number and makes a typographical mistake while typing in the password, the system prompts with: *Enter user password>>* and the user should try again.

- ***NOTE:*** Care must be taken when entering your login and password to be sure you enter both with all lower case letters. Using upper case letters will cause problems later on during the log on session.

Once the user has correctly entered both login and password, the system prompts: *Enter your initials (first, middle, last)*:. These initials are required during the log-on process because they are used in the generation of printable output. This is explained in detail in paragraph Section 4.18 , "The LISTF Command", of this section.

After the user has correctly entered his initials, the system prompts with: *Enter terminal type or hit return*:.

Copyright © 2006 Lucent Technologies

Pressing the carriage return produces a list of all valid CRT terminal types. The user then identifies the terminal type and enters it.

It is possible that a particular office may have more than one Lucent Technologies order processing at a particular time. For example, an office may start to process a growth ODA while the initial order is still processing. There even may be more than one order for a particular office type, for example G (FITTS Growth). However, using the same login, the user may access either the growth ODA or the initial ODA and specifically the desired order number.

If the above situation exists, the system lists the available databases by the office-type, the Lucent Technologies order-number, and the description of the office-type; it then prompts the user for the ODA number associated with the desired order. If only one office database exists for the desired office-type, the user may enter the correct key letter for the type of office database. Possible valid key letters are:

G - FITTS Factory Growth Database
I - Initial Database
R - Retrofit Database
M - Off-line Growth Databases
N - New Non-equipment Off-line Database

When login, password, initials, and terminal type have all been entered correctly, the system prints on the user's CRT screen, information regarding that particular office, such as the office name and type, software release issue, ODA issue and WECO order number. After these messages print, the user has entered the 5ODA system and can begin the job of assembling office data via the 5ODA system commands.

3.2 System Control Characters

When the system is waiting for a command from the user, it prompts the user with *Enter command:*. At this point, the user can enter any valid 5ODA command. (See Figure 1 : "5ODA User Command Summary".)

Certain control characters are available to modify the interaction between the CRT terminal and the 5ODA system. They are:

<return>
- a carriage return is required after every line the user types in.

<CTRL-s>
- suspends the flow of output to the screen. Depress the control key while typing in the letter "s".

<CTRL-q>
- resumes the flow of output to the screen. Depress the control key while typing in the letter "q".

<CTRL-h>
- erases the previous character. Depress the control key while typing in the letter "h". On some terminals, this erase character may be a key labeled "back space".

@
- erases the whole line.

<DELETE> or **<BREAK>**
- stops execution of a command. Delete or break returns the user to the command level prompt (*Enter command:*). On some terminals, this key may be labeled "rub out".

Copyright © 2006 Lucent Technologies

3.3 Logging Off the 5ODA System

When the user wishes to log off the 5ODA system, he/she responds to the *Enter Command:* prompt by typing in a

3.3.1 <CTRL-d>

This is done by depressing the control key and typing in the letter "d".

This ends the session with the 5ODA system, however the user must still physically hang up the phone.

4. TELEPHONE COMPANY COMMANDS

NOTE: If greated by a menu, proceed to Section 7 ,

The Operating Telephone Company Line and Trunk Administrations have responsibility for the great majority of the office input data and, therefore, have access to the majority of the 5ODA commands. This section of the User's Guide is devoted to these commands. The Lucent Technologies Line Engineer can also execute these commands; however, there are a few additional commands which are restricted and only the Lucent Technologies Line Engineer can execute them. These restricted commands are referred to as Lucent Technologies Company commands and are addressed in Section 6 , "LUCENT TECHNOLOGIES COMMANDS").

The main responsibility of the Telephone Company personnel is data entry. Before the data entry command **de** is explained, discussion of the **helpenv, password, manual, news** and **letter** commands will be helpful.

4.1 The "HELPENV" Command

The help command, **helpenv**, displays on the user's CRT screen useful information about a specified topic. Whenever *Enter command:* is displayed, the user can enter the **helpenv** command using the following format (where | indicates "or").

helpenv [*commands* | *office* | *forms* | *records* | *offloc*]

The following types of information are available:

commands - all 5ODA user commands and brief description of each.

office - current office information (e.g., base and control, software release issue, etc.).

forms - all form types (see Figure 9).

records - all record types (see Figure 10).

Examples of a valid **helpenv** command are:

helpenv
- generates a list of all the types of information available.

helpenv commands
- generates a list of all valid 5ODA commands.

4.2 The "PASSWORD" Command

The 5ODA system allows the user to change his password at any time using the **password** command. After the user enters the command

4.2.1 password

the system prompts the user for both the existing password and a new password. Since neither the old password nor the new password appears on the screen as the user types it in, the user is asked to type in the new password twice to insure that it is not mistyped.

The new password must be at least six alphanumeric characters. Only the first eight characters of the password are significant (i.e., the computer system reads only the first eight characters). The password must contain at least one non-alpha character. The user must use the new password the next time he/she logs on.

- **CAUTION:** Because there is no way for the system administrator to determine a user's password, the user is responsible for remembering his/her own password and recording the password in a secure place.

4.3 The "MANUAL" Command

The **manual** command prints reference information and instructions on the execution of the specified 5ODA command. Manual pages are designed to be concise descriptions of user commands and can provide the user with a quick and immediate on-line reference. The manual pages print on the user's attached line printer unless the **-s** option is used to divert the output to the user's CRT screen. Manual pages can be printed to regional data centers by using the **prtoreg** command.

Commands executable only by the Lucent Technologies Line Engineer are referred to as Lucent Technologies commands. This status is indicated by a "W" beside the section number which accompanies the manual page command name (e.g., CROSSCHECK(1W)).

Manual pages are based on standard format sections:

NAME
- gives the name and the purpose of the command.

SYNOPSIS
- summarizes the format of the command. Anything listed between square brackets (e.g., [-s]) is optional.

OPTIONS
- lists all of the available options and their descriptions.

DESCRIPTION
- describes the command in detail.

EXAMPLES
- gives examples of usage.

SEE ALSO
- directs the user to other documents and/or manual pages.

WARNINGS
- points out areas of concern and potential problems where applicable.

The command format follows:

Copyright © 2006 Lucent Technologies

manual *[-s] [manual-pages(s)] [every]* ***[userguide]***

The options are:

-s - Prints the specified output on the user's CRT screen. When the *-s* option is omitted, the output prints to the user's attached printer.

manual-page(s) - Prints the manual page(s) for the specified command.

every - Prints all available manual pages.

userguide - Prints out the *5ODA User's Guide*

Examples of a valid **manual** command are:

manual
- prints a list of all manual pages available since no command is specified.

manual de
- prints the **de** manual page on the user's attached printer.

manual records -s
- prints the **records** manual page on the user's CRT screen.

manual userguide
- prints the 5ODA User's Guide on the user's attached printer.

manual every
- prints all available manual pages on the user's attached line printer.

4.4 The "NEWS" Command

The **news** command is used to keep the user informed of current computer system news. For example, when a user logs into the system he/she may see the following line of text on the screen

news: Xmas phones commands

indicating system news that may be of interest to the user. To find out what this news is, execute the **news** command along with the item you want to see. For the above example, type

news Xmas

and the system news regarding the computer access schedule during the Christmas holidays will be displayed. Because news items are written to all users on that particular machine, some news items may not pertain to 5ODA users. If, after reading the news item, it does not apply, merely ignore it. By typing in **news** without any items, a list of news items available prints on the user's CRT screen.

4.5 The "LETTER" Command

The **letter** command prints messages from the Lucent Technologies Line Engineer or the 5ODA System Administrator. It also informs the user when some 5ODA commands have completed processing (**records, crosscheck**). If, immediately after logging on, the user sees the message *You have mail*, he/she can type in

letter

and the messages will print on the user's CRT screen followed by a question mark. The user must then either remove the message file by typing **d** and **<return>** or save the message file by pressing the **<return>** key. If the user does not have any messages, the system responds with *no mail*.

The **letter** command can also be used to send messages. By using the format (where | indicates "or"):

letter *line | trunk | weco*

the user can specify the person receiving the message. The *line, trunk* or **weco** options can be used to send messages to the specified person with the same base and control. The user can then type in the message with as many lines as necessary. When the message is complete, enter **<CTRL-d>** on a line all by itself to end the message, send it to specified person, and exit the **letter** command. The *Enter command* prompt is then displayed.

4.6 The "SUGGEST" Command

The **suggest** command is a means for the user of the 5ODA process to suggest enhancements to 5ODA user interface commands. Such suggestions might include: improvements on how existing 5ODA commands work, new commands to aid 5ODA processing, new options to existing commands, or new processing features or services related to 5ODA production.

Please note that this command is not a replacement for current methods of communication regarding day-to-day processing of offices. Do not use the **suggest** to document problems with an office's data, nor any problems that require immediate attention. Neither should this command be used for informational questions, scheduling concerns, or administrative concerns.

The **suggest status** command allows the user to review the status of previously proposed suggestions.

4.7 The "ONLINE" Command

The **online** command tells the user who is logged on with the same base and control. The command lists the login name, the terminal number and the login time for each current user.

4.8 The "DE" Command

The **de** command is the 5ODA interactive data entry command which allows the user to enter, change, review or delete data in the database. The 5ODA system uses the general purpose ODIN system to perform these interactive data entry capabilities.

In the data entry command, select a form and then enter or change the data associated with a single form instance on the specified form (e.g., customer telephone number 5551313). Figure 9 is a list of examples of the forms associated with a User Group (line, trunk, or weco). In the example above, customer TN (Telephone Number) 555-1313 is a form instance on the line form. The user can obtain a list of the forms associated with the line or trunk logins via the **<help>** command within **de** command.

Information is error checked as it is entered with error messages displayed at the bottom of the user's CRT screen. **de** performs two levels of data checking:

Level 1 checks are range and syntax checks of a single field and

Level 2 checks are error checks performed between items within the same instance of a logical form.

Copyright © 2006 Lucent Technologies

While in the **de** command, the user can request that the current form instance displayed on the CRT screen be saved in a file for later printing on an attached printer. Any number of form instances can be queued for printing by responding to *Enter Review, Change-insert or Print* with a **p**. After execution of the **de** command, the user must then execute the **listf** command to produce a hard-copy **de** printout (see Section 4.18 , "The "LISTF" Command").

The **de** command is executed by typing

de*[form name[operation]]*

The command prompts for form name and database operation unless these parameters are passed in from the command line. The next section explains the prompts in detail.

Form selection

When the **de** command displays the form selection prompt *Enter name of form:*, the user can make one of three valid responses:

- a valid form name followed by **<return>** (e.g., mlhg)
- enter **<help>** followed by **<return>** to produce a list of all the forms and database operation permissions that the user is allowed to access (see Figure 4)

NOTE: This "help" command must be entered with angle brackets on either side: **<help>**

- or press **<return>** to exit the **de** command and return to the *Enter command:* prompt.

If the user specifies a valid form name , the **de** command verifies that the user is allowed access to that form type (line, trunk, or weco) and proceeds to the database operation prompt. If access to the specified form type is denied, **de** displays

You are not allowed access to this form.

Enter name of form:

The user must then use one of the three options described above. If the user incorrectly enters a form name, **de** displays

Invalid form specified: lne. Try again.

Enter name of form:

If the user responds with **<help>**, **de** displays all the form names the user is allowed to access, along with the database operation permissions that he has been granted for each form. Figure Figure 4 shows a sample of **<help>** message in the **de** command. In that example, the user is allowed to access 11 different forms, and "review" (read only) seven of the forms (indicated by the "r" preceding the form type), but the user can "insert", "review", "update" and "delete" only four of the forms (indicated by the "irud" preceding the form name). Using this **<help>** list, the user can then choose a valid form name. When the user includes the form name on the command line, the user bypasses the form selection prompt and is given the database operation selection prompt. With this option the user can only operate on that form during the **de** session.

4.8.1 Database Operation Selection

After the user has selected a form, a database operation must be specified. When the **de** command displays the database operation prompt *Enter Data Base Operation Code:*, the user enters one of the following four valid database operations- **i, r, u** or **d** - followed by **<return>**.

i
- to insert a new form instance in the database.

r
- to review without changing an existing form instance in the database.

u
- to update an existing form instance in the database.

d
- to delete an existing form instance from the database.

The database operation prompt displays only those database operations that the user is permitted to use for the selected form (seeFigure 5). If the user is allowed only one of the four operations (usually "review"), **de** does not display the prompt since the user has no choice, but moves directly to a full-screen display of a "blank" form instance of the selected form (seeFigure 6 and Figure 7).

The command line also accepts an operation (**r, i, u, d**) when the form type is entered on the command line. The user is placed into that operation for that form, bypassing the form selection and database operation prompt. If the user is not allowed to make that operation, a message is printed telling the user that he/she will be placed into review mode. With this option the user can only execute that operation on the given form for that **de** session.

Database Operation Restrictions

In some cases update and delete operations may be restricted for a single form instance rather than for an entire form. These restrictions would most likely be applied for retrofit or off-line growth offices. The restrictions would probably be applied to data that has been dumped from an existing 5ESS-2000 Switch.

In addition to form and database type, the restrictions are based on a particular data field found on each form instance. It will be located in different areas on the form, but is generally on the last (or only) page in the top right corner. The legal values are:

E - data dumped from an existing 5ESS-2000 Switch.

C - data from an existing switch that has been changed.

N - new data that has been added to existing data.

The field may also be blank.

The user is not restricted from choosing the update or delete operation. However, before the actual update or delete is performed, a check is executed to determine if the operation is allowed. If the chosen operation is restricted, the user receives one of the following messages, depending on the operation chosen:

Deletes are not allowed on data of type _ on form type _____.

Updates are not allowed on data of type _ on form type _____.

Copyright © 2006 Lucent Technologies

The user is not allowed to perform the requested operation.

An exception to the update restriction is that certain forms may allow non-critical data fields to be updated, overriding the update restriction. On these forms, the user can only position their terminal cursor on those special fields to update. The rest of the fields are shown in a no-change display mode. Depending on the user's terminal type, the no-change fields are displayed at half screen intensity.

The **restrict** command reports on the forms that have database operation restrictions and the forms with special field update privileges.

Data Entry Session

If the user chooses the insert or update modes, he/she has the facility for changing data values via the change/substitute mode.

Change mode is entered by responding with a "c" to a form operation prompt. The field to be changed is identified by entering the field number in response to the Change field prompt. When the user enters the new data, it is subjected to new error checking. Entering **<return>**, back tab, or abort in response to the Change field prompt, serves to exit change mode and the cursor moves to the form operation prompt. If the user enters a field number that is not on the current screen (multi-screen forms), then the appropriate screen is displayed automatically and processing continues.

Substitute mode is a facility for changing data values in a form. Substitute mode differs from change mode in that it allows substitution of strings within a field rather than forcing the user to re-enter the entire data value when it is necessary to change a field. A field to be changed is identified by entering a field number in response to the Substitute field prompt. In addition to the field number, the operator must respond to the *From string:* and *To string:* prompts which identify the existing string and the replacement string within the field, respectively. Normal data checking is then performed on the new field. Care must be observed when using the substitute mode to uniquely identify the string of data within the field to be changed.

If the use enters a field number that is not on the current screen (multi-screen forms), then the appropriate screen is displayed automatically and processing continues. Entering **<return>**, backtab or abort in response to the Substitute field prompt serves to exit substitute mode and the cursor moves to the form operation prompt.

Once a database operation has been specified, a "blank" form (or the first screen of a multi-screen form) is displayed. If the backtab (<) control character is entered in the first field of a form, the system will terminate the current database operation and return the operator to the form type selection prompt. If the backup (^) control character is entered in the first field of the form, the system will terminate the current database operation and return the user to the database operation prompt. The screen is not cleared before displaying this prompt, making operation switches on the same form type a quick process. The operator may respond with a database operation code (i, r, u or d) or a control character as described above. (See FigureFigure 2 at the back of this manual, or use the **manual** command to see the manual page for **navigate**.)

To exit from the **de** command, the user responds to the form selection prompt *Enter name of form:* with **<return>**.

The user is provided with a complete set of data entry control characters which conserve keystrokes and allow navigation through the form displayed on his CRT screen (see "Figure 2 : "5ODA Data Entry Control Characters"). Navigational control characters may also be attained by entering a "?" during data entry.

Once the user has entered **de**, depending on his database permissions, he can insert a new form instance; review, update or delete an existing form instance; or request that the current form instance be printed. The

Copyright © 2006 Lucent Technologies

listf command must be executed to receive a hard copy printout of the **de** command. (See Section 4.18 "The LISTF Command".)

4.9 The "DBSTATUS" Command

The **dbstatus** command is an informative command that tells the user the state of the forms database, either "frozen" (locked) or "thawed" (unlocked). When the crosscheck command is executed by the Lucent Technologies Line Engineer, the forms database is marked as "frozen". This means the database is locked and no data entry is allowed. In order to unlock the database, the Line Engineer must execute the **thaw** command.

The following format

dbstatus

tells the user whether data entry is allowed at this time.

4.10 The "RESTRICT" Command

The **restrict** command reports on forms that have database operation restrictions for particular database operations (insert, delete, update). Database operation restrictions are placed on data that has been dumped from an existing 5ESS-2000 Switch for Retrofit and Large Terminal Growth offices.

A report displays the form, the data type and the restrictions associated with that form's data type. Also, forms that allow special field updates on restricted data are indicated by an asterisk following the form name.

By using the following format

restrict

the user will be told what database forms have database operation restriction.

4.11 The "ALLFORMS" Command

The **allforms** command reads the database (see Figure 3) and produces all form instances of one, or more, or every form type present in the database in CRT screen image.

Using the following format

allforms *[form name(s) | user group | every]*

the user requests that the specified form(s) be processed.

form name(s) - individually or as a list of one or more valid form names separated by blanks (e.g., "mlhg" or "mlhg lcc ldit trunk").

user group - all the forms associated with a user group (e.g., "lines", "trunks" or "weco"), where "lines" is the group of all customer line forms, "trunks" is the group of all trunking and routing/charging forms, and "weco" is all equipment forms. Figure 9 lists examples of forms that are associated with each user group.

every = every or all forms.

When the **allforms** command is submitted, it is processed as a background process, and the user is notified via the **letter** command when it has finished. When **allforms** command has completed, the user must then

Copyright © 2006 Lucent Technologies

execute the **listf** command to produce a hard-copy **allforms** printout. (See Section 4.18 "The LISTF Command".)

The following are examples of valid **allforms** command lines:

allforms tkgrp
- generates all form instances of the tkgrp form.

allforms lcc rar tkgrp
- generates all form instances of the lcc, rar and tkgrp forms.

allforms weco
- generates all form instances of every form in the group "weco".

allforms deficient
- generates all form instances for forms defined as "deficient". (Deficient forms are those whose data may not be valid.)

allforms every
- generates all form instances of every form type.

- **CAUTION:** Executing **allforms every** takes extremely long to run and generates a lot of output. Use of this command is discouraged since the records command effectively gives the same output in a more condensed format, and is much faster. (See Section 4.14 "The RECORDS Command".)

allforms
- no forms are specified so the **allforms** command prompts the user with *Enter form type(s)*. The user must then respond with a form type or form type category as described above.

4.12 The "ERRFORMS" Command

The **errforms** command reads the database (see Figure 3) and produces in CRT screen image only those form instances of specified form types present in the database that contain errors and/or warnings.

Using the following format

errforms*[form names | user group | every][-nf]*

the user requests that the specified forms be processed.

form name(s) - an individual form name or as a list of one or more valid form names separated by blanks (e.g., "line lcc ldit").

user group -an entire user group of forms (e.g., lines, trunks or weco), where "lines" is the group of all customer line forms, "trunks" is the group of all trunking and routing/charging forms, and "weco" is all equipment forms. Figure 9 lists examples of some of the default forms associated with each user group.

every - all forms

-nf - no-forms option, **errforms** suppresses mask images, while displaying form key information along with Level 1 and Level 2 error and warning information. This option greatly reduces the output of the attached printer.

When the **errforms** command is submitted, it is processed as a background process and the user is notified

Copyright © 2006 Lucent Technologies

via the **letter** command when it has finished. When **errforms** command has completed, the user must then execute the **listf** command to produce a hard-copy **errforms** printout (see Section 4.18 "The LISTF Command").

Examples of a valid **errforms** command lines are:

errforms tkgrp
- generates those form instances of the tkgrp form that contain errors and/or warnings.

errforms lcc rar tkgrp
- generates those form instances of the lcc, rar, and tkgrp forms that contain errors and/or warnings.

errforms wecoR
- generates those form instances of every form in the user group "weco" that contain errors and/or warnings (see Figure 9).

errforms tkgrp -nf
- generates those form keys of the tkgrp form that contain errors and/or warnings.

errforms deficient
- generates those form instances of every form type that are defined as "deficient". (Deficient forms are those forms which may have invalid data).

errforms every
- generates those form instances of every form that contain errors and/or warnings.

errforms
- since no forms are specified, the **errforms** command prompts the user with *Enter form type(s)*. The user must then respond with a form name or a user group category as described above.

This command is very useful after bulk data has been loaded into the system.

4.13 The "SUMMARY" Command

The **summary** command reads the database (see Figure 3) to produce a hard-copy summary of the form types requested. **summary** produces a count of how many form instances are in the specific forms, the number of forms with errors, and the number of forms with warnings (see Figure 8). This command error checks every record and may take a considerable amount of time to process, so it should be run with this in mind. When **summary** is executed, it processes as a background process and the user is notified when it has completed via the **letter** command.

The **summary** has the following format:

summary *[form(s) | user group | every]*

It requests that the specified form(s) be processed.

form(s) - one or more valid form names separated by blanks (e.g., "mlhg" or "mlhg lcc ldit trunk").

user group - the forms associated with a user group (e.g., "lines", "trunks" or "weco"), where "lines" is the group of all customer line forms, "trunks" is the group of all trunking and routing/charging forms, and "weco" is all equipment forms Figure 9 lists examples of forms associated with each user group.

every - every or all forms.

Having executed the **summary** command, the user must then execute the **listf** command to produce the hard-copy **summary** printout (see Section 4.18 "The LISTF Command").

Examples of a valid **summary** command are:

summary tkgrp
- generates a summary of the tkgrp forms.

summary lcc rar tkgrp
- generates a summary of the lcc, rar and tkgrp forms.

summary weco
- generates a summary of all forms in the user group "weco" (see Figure 9).

summary deficient
- generates a summary of every form type that is defined as deficient (deficient forms are those whose data may not be valid).

summary every
- generates a summary of all forms.

summary
- This example has no form(s) specified, so the **summary** command prompts the user with *Enter form type(s)*. The user must then respond with a form(s) or user group category as described above.

4.14 The "RECORDS" Command

The **records** command reads the database to produce office records (see Figure 3). The output of a **records** command is a tabular printout that closely resembles the 5ESS-2000 switch office record formats.

Using the following format

records *[record(s) | user group | every]*

the user specifies which office records to generate.

record(s) - one or more valid records separated by blanks (e.g., "5101-1 5202 5303").

user group - records in a user group (e.g., "lines", "trunks", "weco" or "brcs") where "lines" is the group of all customer line office records and "trunks" is the group of all trunks and routing/charging office records and "weco" is the group of all equipment office records, and "brcs" is the group of Business and Residence Custom Services office records.Figure 10 lists examples of office records associated with each user group.

every - every or all office records.

Having executed the **records** command, the user must then execute the **listf** command to produce a hard-copy printout (see Section Section 4.18 "The LISTF Command"). When using the **listf** command, the user may print all of the output from the **records** command, or merely parts of it. For example, after executing **records lines** (which produces office records for all the line forms), the user can list all of that output by requesting **listf records**, or list only one office record (e.g., 5104) from the output by requesting **listf 5104**. The **listf** command with the "-changed" option can be used to display only those records which have changed since a given date and time.

Copyright © 2006 Lucent Technologies

For off-line growth processing, form instances that are deleted from existing data are saved in a special data area. When the **records** command is executed, the office records are automatically generated for the deleted form instances. The deleted records can be viewed via the "deletes" option on the **listf** command (see Section Section 4.18 "The LISTF command".)

Examples of a valid **records** command are:

records 5202
- generates the 5202 office record.

records 5100-1 5202 5203 5204 5209 5509 5511
- generates the 5100-1, 5202, 5203, 5204, 5209, 5509 and 5511 office records.

records lines
- generates all office records in the lines user group (seeFigure 10).

records every
- generates all office records.

records
- the "records" command without any record numbers specified prompts the user with *Enter record types(s)*. The user must then respond with a record number or record user group category as described above.

The **records** command is submitted to the jobs queue and will be run when system resources will allow. The status of the job (either queued or running) may be checked via the **jobs** command. Upon completion the user who submitted the job is notified via the **letter** command.

4.15 The "SCAN" Command

scan is an interactive command which allows the user to examine an office's input form or base relation data. The files are viewed over consecutive screen images with one column per attribute. By executing

scan *[file_name] [-d] [-old]*

the user may view input form data.

file name - input forms should be specified in lower case letters. The base relation file name should be specified in all upper case letters. If the file name is not known, the user may enter **scan** followed by a **<return>** to display valid input form and/or base relation file names.

-d option provides review access for large terminal growth (non-hardware) delete databases exclusively. Simultaneous examination of input and base relation data is not permitted via the *-d* option.

-old - access the previous software release and/or ODA issue database, which includes input forms and base relation files. No other options can be specified with the "-old" option. The user is given review permission only.

The **scan** command also supports record substitution (global updates) to input forms for Initial offices, however, only the Lucent Technologies SEEs (System Equipment Engineers) can perform this feature. The Line and Trunk engineers are restricted from doing global updates to the data. The SEE sets "Selection Criteria" and global substitutions are made according to the selection criteria the SEE has set. Once the SEE is satisfied with the changes the file must be inserted (updated) back into the original file. Updates are only allowed during the data entry time frame on options available through the editor command.

Copyright © 2006 Lucent Technologies

Key attributes are underlined and repeated on each screen image. "Scan" assumes all attributes are to be viewed. When the screen size is too small then attributes are divided over multiple consecutive screens. For convenience the screen images can be reformatted and customized to view only attributes and data of interest. This is accomplished with the **cut** and **add** commands used interactively within the **scan** command. Records can be scanned in a forward or backward direction in a continuous or single page mode.

Screen width and length can also be modified using the **page size** commands within the **scan**.

Execute the **manual scan** command to obtain information on scan's interval commands to perform any of the features mentioned above.

To exit from the **scan** command, type in the letter "q" (for quit) in response to the prompt (:).

4.16 The "JOBS" Command

The **jobs** command is an informative command which tells the user what jobs are still in the jobs queue.

Four commands, the **records** command, the **crosscheck** command, the **mapping** command, and the **dbgen** command, take longer to run than most other 5ODA commands and could slow down the performance of the computer system if many were submitted at one time. Therefore, these commands are placed in a temporary area where they are executed when computer resources allow.

The format for the **jobs** command is

jobs *[-all] [-f]*

To find out the status of a command that you entered, execute

jobs

All jobs whose status is either "queued" or "running" will print on the CRT screen. When a job begins processing its status changes from "queued" to "running".

-all - gives the status of all commands in the jobs queue. All jobs for all users will print on the CRT screen.

-f - gives the disk file system for every job, as well as an approximate "percent done" calculation for each running job.

4.17 The "KILLJOB" Command

If a user wishes to cancel a job that is still in the jobs queue and has not yet started running, the **killjob** command can be used to remove that job. This command can be used to cancel **records, crosscheck, mapping** and **dbgen** commands whose status is "queued". By using the following format (where | indicates "or")

killjob *records | crosscheck | mapping |dbgen*

the user can cancel any one of these commands. However, selectively kill a job cannot be selectively killed if more than one of that type is in the queue. For example, if a user submitted 5 **records** jobs, and executed **killjob records**, all 5 jobs are removed from the queue.

To find out what jobs are still in the jobs queue, execute the **jobs** or the **jobs -all** command.

Copyright © 2006 Lucent Technologies

4.18 The "LISTF" Command

The **listf** command is a general purpose command used to print output previously produced by: **allforms**, **de**, **errforms**, **records**, **scan**, and **summary**. Refer to the appropriate section in this manual for each of these commands. (The output from **crosscheck** command is printed using the **listxk** described in the next section.)

The output of any 5ODA command is placed into a file when the command is executed. The output file name is generated using the name of the executed command with the user's initials (entered when the user logs in) appended as a suffix. For example, if a user logs into the system with initials "abc" and executes the command **errforms**, the output file is labeled "errforms.abc". This file "errforms.abc" remains in storage until the very next time the user with initials "abc" executes **errforms** again, in other words, the new output of **errforms** overwrites the old output, or until the user removes the file (see Section 4.21 , "The REMOVE command").

A user may print the output of any command-name he has executed without specifying his initials as a suffix (e.g., **listf summary**) since the **listf** command searches for the output of the command with the user's initials first. If a user wants to print out only his own file(s), no initials are needed, e.g., **listf de**. But, if a user wants to print out a file generated by someone else, then that user's initials must be specified with the command name (e.g., **listf de.mlh**).

In listing the output of the **records** command, the user may request all of his/her output or individual records. For example, if after executing the command **records every** (which produces all office records), the user wanted to look at the output of one office record, 5104, he/she could specify **listf 5104**. In the case of off-line growth offices, all the deleted records may be listed using the *deletes* option. Also, any user can print the output of the records command, no matter who generated it.

The **listf** command has the following format:

listf] *[-u] [-s] [-cN] [-r] [-n] [-errors] [-summary]*
[-number][command-name[.initials][-changed]

The options can be specified in any order.

-u - prints the output created through the editor command.

-s - prints output on the user's CRT screen. If omitted, the output is printed on the user's attached hard-copy line printer.

-cN - requests multiple copies of the output where "N" is the number of copies desired. If omitted, one copy is printed.

-r - removes the requested file from the system immediately after printing, thus saving disk space and disk charges. The output of a command remains in storage until (1) the next time the file owner runs the command-name; (2) until the "listf" command is executed with "-r"; or (3) until the user removes the files using the remove command. Only the owner of a file (whose initials are the file suffix) can remove the file.

-n - numbers each line of output.

errors - prints only the crosscheck error messages, without the specific instances of the errors.

-summary - this option is to be used only when printing **errforms** output. This option prints **errforms** output in a summarized format. For example, if a given form had the same Level 1 error for every tuple in the form, the error is listed once with a count of the number of tuples in the form that had that error. Use of this option

greatly reduces the size of the **errforms** output.

-number - skips the first specified number of lines of output.

command-name - prints the desired output file(s). This may include deletes, which is data deleted during the offline growth process (specify **listf deletes**)

-changed - lists only those records which have changed since a given time. This option is only valid when used to obtain records output. The user is shown the list of time when the records every and prtoreg listf records commands were run for this office. The user may select any of those times.

Examples of a valid **listf** command are:

listf
- lists the names of all available files along with the dates they were created.

listf de errforms
- prints on the line printer the output of those **de** and **errforms** commands with the user's initials.

listf errforms.mlh
- prints on the line printer that output of **errforms** executed by user "mlh".

listf records
- prints all of the output of the records command.

listf 5505
- prints only office record 5505.

listf -c2 summary -s -r
- prints two copies of the user's **summary** output (since no initials are stated) on the CRT screen, and removes the file immediately after printing.

listf -u editfile
- prints the output of the file "editfile", which was previously created through the editor command.

listf -errors errform.xyz
- prints the output of **errforms executed by user "xyz" without the warning and in a summarized format.**

listf -n 5505
- prints only the office record 5505 with line number in the first column of each line of the output.

listf myfile.xyz
- prints the "myfile.xyz" file which was created by user "xyz" with the write option of scan.

listf -s records -changed
- displays a list of times and asks the user to select one. All records which have changed since the selected time are displayed on the user's terminal.

4.19 The "LISTXK" Command

The **listxk** command prints output previously produced by the **crosscheck** command. See the appropriate section for instructions on the execution of the **crosscheck** command.

Two types of listings can be generated. The first report prints any Level I, II and III checks found by the

crosscheck command. The user may use several options to tailor the output of the checks. The default is for all errors and warnings messages to be printed. The user may choose to print a reduced format of Level I and II checks or not print them at all.

The user can also specify Level III error or warning messages only and limit the number of data lines printed after each error or warning message found. The number of data lines skipped will be printed. The last option allows the user to select packages to run the report on. Packages are discussed in the next paragraph and the default is to report on all the packages.

The second listing option generates a summary of all Level III errors. The report consists of header and four fields separated by tabs. The first field, "Type", tells if the check was an E (Error) or W (Warning). The second field, "Count", gives the number of error conditions for that error. "Package" is the third field. It is the name of the package group where the error occurred. These names can be used in the first report to print only those errors or warnings associated with those packages. The last field, "Name and Number", is the name associated with the error.

The format for the **listxk** command is as follows:

listxk *[-cN] [-number] [-s] [-summary]|[[-nf | -l1l2]*
[-llimit] [errors] [warnings] [package ...]]
-cN - request multiple copies of the output, where N is the number of copies desired. The -c option may be omitted if only one copy is desired.

-number - skip the first specified *number* of lines of output.

-s - display output on user's CRT screen. If the -s option is omitted, the output is printed on the user's attached line printer.

-summary - print summary listing. The following options are ignored if this option appears on the command line.

-nf - (no forms) suppress CRT input form images, generate key field information along with errors and/or warnings for Level I and II checks.

-rl1l2 - suppress the printing of Level I and II checks.

-llimit - Option to limit the number of lines associated with an error or warning message. If this is omitted, all lines are printed. Level III messages only.

errors - print only the crosscheck error messages, level III messages only.

warnings - print only the crosscheck warning messages, level III messages only.

package - print only messages from the given package. More than one package can be specified, however, only level III messages are printed.

For convenience, options may be specified in any order except that package names must be at the end of the command line.

Examples of valid "listxk" command are:

listxk
- prints the output of the crosscheck command executed by the SEE (System Equipment Engineer).

listxk -summary
- prints a summary report on the number of errors and warnings messages and the number of instances for each message.

listxk -s -l10
- prints output of the crosscheck command to the screen limiting the number of output data lines per Level III checks to 10.

listxk -c2 errors RC TRUNK LINES
- prints 2 copies of the output from the crosscheck command to the line printer for Level III error messages from the "RC", "TRUNK" and "LINE" packages.

4.20 The "RUNXCHECK" Command

The runxcheck command is executed by telephone company users to submit a crosscheck job which the SEE has set up previously via the **crosscheck -sleep** command. For more details, see the crosscheck command under the section "Lucent Technologies Commands".

4.21 The "REMOVE" Command

For efficient utilization of the 5ODA computer, it is recommended that each user of the 5ODA system periodically check the 5ODA file storage area and remove unwanted files. By executing

remove

without any file names, the **remove** command lists all the files in storage which the user is allowed to delete along with the dates that they were created.

A file in storage is the output of a command. The name of this file is the command name with the user's initials appended to the end. For example, if a user with initials "abc" logged into the 5ODA system and executed the command **errforms**, the name of the output file would be "errforms.abc". This file remains in storage until:

- the same user executes **errforms** again (i.e., the new output overwrites the old output).
- the same user executes the **listf** command with the -r option, which will remove the file immediately after printing.
- the user executes the **remove** command. To remove a file, execute

remove *filename*

The Lucent Technologies Line Engineer can remove anyone's files, and only he can remove the output of the **crosscheck** command.

Examples of a valid **remove** command are:

remove
- print all files in storage the user is allowed to delete with the dates they were created.

remove errforms
- removes the output of **errforms**.

Copyright © 2006 Lucent Technologies

remove errforms.abc de.map summary.dje crosscheck
- this command can only be executed by the Lucent Technologies Line Engineer because it is removing the output of commands executed by different people and because it is removing the output of the **crosscheck** command.

4.22 The "TLOCK" Command

The command **tlock** gives a level of security to the restricted user so that he/she may leave a terminal unattended. This also saves the users from having to log off and on when they desire to leave the terminal.

After entering the command, the user is prompted with the office's password. The user can now leave the terminal unattended. To resume the session, enter the office password.

To execute **tlock**, enter:

tlock

The prompt will look like this:

Enter password for <office base and control>:

To resume the session, enter the password.

If the user does not know the office password, **tlock** should not be used because the user will be locked out of the session.

4.23 The "PRSPEED" Command

This command regulates the speed of output from a host machine to a terminal or PC. The command is useful when using a printer attached to a PC running DOS or similar operating system, which does not have flow control to regulate the output to the printer. The above setup sometimes generates garbled output when jobs are sent to the printer, especially when it is a flow printer.

The **prspeed** command slows down the output rate to a level that can be handled by the printer.

The format of the command is:

prspeed *(low | med | hi)*

The command has three settings for output rate, low, medium, and high. The *hi* setting corresponds to the normal speed. Any one of the options must be specified.

Users having difficulty with their printers may run this command with the *low* or *med* option before running any other command which sends output to the attached printer. The choice of low or medium depends on the performance of the individual printer. If medium does not suffice, then low should be used.

However, once the printing is done, if the user should return control to the screen. **prspeed** should be run again with the *hi* option to resume the output rate to normal. Otherwise, any subsequent interaction on the video screen may be sluggish. If the user wants to run more than one print command in succession, then the user needs to run **prspeed** only once before and once after the print jobs.

The following is an example showing how to use **prspeed** when running two print jobs in succession:

prspeed low

listf records
manual listxk
prspeed hi

The printing times may be slightly extended when **prspeed** to slow down the output rate.

5. THE LUCENT TECHNOLOGIES SYSTEMS EQUIPMENT ENGINEER

This section of the manual addresses the Lucent Technologies Line Engineers who have the overall responsibility for the correct generation of the base relations required by the 5ESS-2000 Switch. The 5ODA commands in this section can only be executed by the Lucent Technologies Line Engineer and are therefore referred to as restricted or WECO commands. The Line Engineer's responsibility in building an office's database can be described in these steps:

- Office registration (Section 5.1 "Office Registration")
- Equipment data entry (Section 4.8 "The DE Command")
- Database validation (Section 6.4 "The CROSSCHECK Command")
- Transmission of the equipment input related data for MMST (Multi-Module System Test) and SMST (Switching Module System Test) (Section 6.9 "The SENDIMST Command").
- Mapping the data into base relations (Section 6.6 "The MAPPING Command").
- Generation of the machine loadable Office Dependent Database (Section 6.7 "The DBGEN Command").

Each of these areas is discussed in detail in this section of the 5ODA User's Guide, except for data entry which is discussed in "Telephone Company Commands" (Section 4).

5.1 Office Registration

Before any processing can be done for a particular office, that office must first be registered by the Lucent Technologies Line Engineer. For this registration process, the Line Engineer must dial up a 1200 bps (bits per second) line or 2400 bps line on the toll free number:

5.1.1 1-800-551-5748

When the system prompts for class, the following must be entered:

lcutsa

The line engineer can also connect to the remote processor through the Datakit® address:

il/cu/lcutsa

The login name and password are:

Login name: 5odareg
password: XXXXXXX

After entering the SEEs special login and password, the Lucent Technologies Line Engineer continues the log-on process as described in Section 3.1 , "Logging on to the 5ODA System". Once the SEE has completed

the log-on procedure, the system prompts him/her for the type of operation to be executed: register a new office or update an existing office (see next section "Office Updating"). If the register option is selected, the system prompts for the type of office to be registered: initial growth, retrofit, large terminal growth, or customer service, and then displays a blank registration form on the CRT screen. The engineer proceeds to enter all the requested information. When the form has been completed, the engineer should request the "insert operation" and this information is submitted for processing to the 5ODA Database Management Organization. After the form is finished and inserted, the engineer is asked if he/she would like to register another new office, update an existing office or exit from the system. Within a few days, the office should be registered, its database initialized and ready for input data entry.

5.2 Updating An Office In The PSS (Production Scheduling System)

Once an office has been registered by the SEE in PSS, it is possible that the data has changed from the time that it was registered it. To update registration data, the SEE should access the system exactly as is outlined in the previous section. The same login is used (5odareg) as well as the same password.

The SEE should select the update option when prompted and then select the type of office that needs updated. Again, exactly as above, the SEE is placed into update mode on a blank form. Once the base and control and weco order number for the office to be updated have been entered, the rest of the existing data is populated on the form. There is a subset of the fields on the form which the SEE may update at this time. Any of the information about the SEE for the specific office (name, phone number, department number), the remarks field and all of the modified date fields have update permission granted to the SEE.

If drastic changes are made to any of the dates, the SEE must be sure to notify the Database Managers either via the telephone (SDN or commercial 708-224-6269) or via a facsimile with the requested change. An example of the above condition would be, the FULLS data for an office is scheduled to be shipped at a time at least a week in the future and the SEE wants to change the PSS dates so that the data is to be shipped on the next day. The Database Management group must be contacted about the change in schedule. Database Management receives listings of the offices which have been modified during the past seven days once a week every Monday. For this reason, any time that the dates are modified so that events will now be occurring during the week in which the change was made, the Database Managers must be contacted via telephone to notify them of the change.

- **WARNING:** The other information which was entered during office registration is critical to the processing of the office. If any of this other information is found to be incorrect, the Database Management group should be contacted immediately to ensure the integrity of the ODD (Office Dependent Data).

When all the desired fields have been updated, the engineer should request the "update operation". Once the form has been updated, the engineer has the opportunity to either update another office, register a new office or exit the system.

6. LUCENT TECHNOLOGIES COMMANDS

6.1 The "HISTORY" Command

The **history** command is a privileged command that can be used only by the Lucent Technologies Line Engineer. When executed, the **history** command lists the date and time that successfully completed **crosscheck**, **mapping**, and **dbgen** commands were initiated for a particular office. The list is summarized with the total number of executions for each type of command.

This command may be helpful to the System Equipment Engineer if there are any questions on the offices

Copyright © 2006 Lucent Technologies

data processing. The history command can be used to obtain a complete processing history for a particular office/Lucent Technologies order number.

6.2 The "GROUPINGS" Command

One of the most important aspects of any data processing system is the method it uses to exercise control over its activities. The 5ODA system uses the **groupings** command to exercise control over who can access a given form and what database access permissions a user may have.

The **groupings** command is a restricted command that can only be executed by the Lucent Technologies Line Engineer.

Initial groups (lines, trunks and weco) are created when the 5ODA administrator initializes an office. See Figures Figure 9 and Figure 10 for examples of these default groups. The group a form or record is in, determine who has what Database permissions (insert, review, update or delete) for a form or record depend on the user group of which the form or record is a member. In other words, if the form "amact" is in the group "lines", then the line administration data entry people have insert, review, update and delete permissions on form "amact". The Lucent Technologies Line Engineer has all four permissions on all three groups (lines, trunks, weco). These permissions may be further restricted (see Section 4.8 "The DE Command").

Using the following format

groupings *forms | records*

the T Line Engineer specifies the type of group files to be modified, either forms or records. Once in the **groupings** command, the user is asked to *Enter form (or record) name and group(s):*. The user enters the name of the form or record to be moved and the group(s) into which it should be moved. Specify all groups in which a form or record is to be included. A form or record is removed from a group by not including it in the new specification. Forms or records which are not changed remain in their original groups.

To get the current status of the three groups, respond to the *Enter form (or record) and group(s):* prompt with **list lines** or **list trunks** or **list weco**.

A groupings session may be aborted at any time by pressing the break key. If no more changes are desired and the changes should be made permanent, enter <ctl-d> to exit from the **groupings** command.

6.3 The "DEFICIENT" Command

The **deficient** command is restricted, meaning only the Lucent Technologies Line Engineer may execute it.

When data is loaded into an office database via batch mode (e.g., COSMOS, VIRGOS, etc.) or when an office is evolved from one ODA issue to another, those forms that have errors are set to "deficient", indicating the data is not valid. Later, during the **crosscheck** run, if a deficient form passes all Level I (range and syntax) error checks and Level II (items within the same instance of a logical form) error checks, it is then marked as "valid". When a form is defined as "valid", it implies that the data in that form is good and that data with errors may not be entered into it. When a form is marked as "deficient" it implies that the data in that form may not be good, and bad or incomplete data may be entered into it by using the *ignore" option in the data entry command* **de**.

The **deficient** command is an informative command which tells the Lucent Technologies Line Engineer which forms are currently defined as "deficient". When the command is executed in the following format

deficient

a list of all deficient forms prints on the user's CRT screen.

6.4 The "CROSSCHECK" Command

The **crosscheck** command is restricted, therefore only the Lucent Technologies Line Engineer can execute it. **Crosscheck** reads the database (see Figure 3) and performs database validity and consistency error checks (also called "cross-form error checks") to verify that no crosscheck errors exist from interactive or bulk data entry on any form instances in the database. If any errors are found, the **crosscheck** command produces error/warning messages that inform the line engineer of this condition. These errors must be corrected prior to the execution of the **mapping** command to insure the correct generation of base relations. Mapping assumes good input. If the input is bad, **mapping** could silently generate incorrect base relations.

Although the **crosscheck** command is restricted, the output of the command (i.e., error/warning messages) is available to all users. The output file is generated without any initials appended. In order to receive a printout of the output, the **listxk** command or the **prtoreg** command can be used (see Section 4.19 "The LISTXK command" and Section 6.12 "The PRTOREG command"). The **prtoreg** command can only be executed by the SEE. Through the **prtoreg** command, the hard-copy printout can be sent to any of the 4 region's data centers (e.g., Eastern Region data center), Indian Hill or the NSC. To receive a copy of the output without calling **listxk** or **prtoreg** after crosscheck completes, submit crosscheck with the **-print** option. When this option is used, a hard-copy listing of the output of **listxk -summary** will be sent to the location specified by the user. The user will be prompted for this location when crosscheck is submitted. The available locations are the same as those listed above for the **prtoreg** command.

During the execution of the **crosscheck** command no data entry (**de**) is permitted. If data entry is in progress when **crosscheck** is executed, the **crosscheck** command terminates and indicates who is currently doing data entry. The only exception is if the "weco" option is being used. In such a case, if a telephone company user is in data entry, the person who submitted **crosscheck weco** is informed of the data entry user and asked if he/she wants to continue. If the SEE does not want to proceed, processing is terminated; otherwise, processing continues normally.

At this time, the database is locked to prevent any new personnel from entering data entry in update mode. However, the SEE must wait until any current data entry personnel have exited data entry before the **crosscheck** will run.

The **crosscheck** command locks the database to prevent any data entry. Both Level I data checks (range and syntax checks) and Level II data checks (items within the same instance of a logical form) are performed on deficient forms, i.e., those which allow for input of non-standard data. The **crosscheck** command will fail if Level 1 or 2 errors exist. If all data is valid, then **crosscheck** performs Level III data checks (checks for consistency between forms). Any deficient forms are set to valid if they are error free. The database remains locked when the **crosscheck** command is finished processing. If the line engineer wishes to allow more data entry or data corrections, he/she must execute the **thaw** command to unlock the database (Section 6.5 , "The THAW Command"). The line engineer can avoid having to execute **thaw** after the **crosscheck** command has completed by using the **-thaw** option on the **crosscheck** command line.

Using the following format,

crosscheck

the Lucent Technologies Line Engineer initiates database verification. Level 1 and Level 2 error checks are performed on all forms defined as deficient.

Using the following format,

crosscheck weco

the Lucent Technologies Line Engineer initiates data verification on "weco" or equipment forms only. By using the "weco" option on the crosscheck command, level 1, level 2 and cross form checks (level 3) are only performed on equipment forms. Execution of **crosscheck weco** must be done in preparation for MMST and SMST processing. But, because this is not full database verification, mapping will not be allowed after a **crosscheck weco** run.

> ***NOTE:*** Processing will not be terminated if a telephone company user is in data entry. In this case, the person who submitted **crosscheck weco** is informed of the data entry user and asked if he/she wants to continue. If the SEE does not want to continue, the processing will be terminated; otherwise, processing will continue normally.

If a particular form is defined as "deficient" and cannot pass the level 1 and level 2 error checks during a **crosscheck** run, and 5ODA development engineering determines that the level 1 or level 2 data checks should be bypassed on that particular form, and have marked that form as being an "exception" to the crosscheck process, the Lucent Technologies Line Engineer may execute

crosscheck anyway

which will not perform level 1 or level 2 checks on that form. This option can be used by the regional engineers on the first crosscheck run for each dump of a retrofit or the dump or merge side of a large terminal growth only. They may not use the *anyway* option for initial, hardware growth, new-side large terminal growth, or special service offices.

The **crosscheck** command produces both "error" and "warning ..." type message output. Because warning messages are often informational and require no further action, they may be optionally executed under certain circumstances.

Using the following format,

crosscheck -errors
only the crosscheck error messages will be produced. This option is valid for retrofit and initial orders for 5E6 and later. The *-errors* option may only be used if both error and warning messages have been executed on a previous run. If warnng message are not exectued, the warning message output from the previous run is retained and may be viewed via the listxk command.

Using the following format,

crosscheck -print

a hard-copy of Level 3 error checks will be sent to a specified location after **crosscheck** completes. The **crosscheck** command prompts the user for the location when the *-print* option is specified.

Using the following format,

crosscheck -thaw

the database is automatically thawed after **crosscheck** completes with data errors.

Using the *-sleep* option as follows,

crosscheck -sleep

an SEE can set up a "sleeping" crosscheck job. A sleeping crosscheck is one which is not submitted to the queue (i.e., it sleeps), until the telephone company user indicates that it should be queued. A sleeping crosscheck retains the options requested by the SEE, including all printing requests (e.g., the region to which printouts are to be sent, the bin, etc.)

This feature is particularly useful if the SEE wants to run **crosscheck** immediately after a telephone company user completes data entry. Instead of the telephone company user having to call the SEE when he/she is done, potentially late at night or during the weekend, the SEE can submit a sleeping crosscheck. When the telephone company user completes data entry, instead of calling the SEE, he/she can put the crosscheck job in the queue via the **runxcheck** command.

After a sleeping crosscheck has been set up, if anyone runs **crosscheck**, the sleeping crosscheck is removed. This prevents confusion about who should be submitting **crosscheck** and when it should be done. Similarly, once a sleeping job has been submitted to the queue via **runxcheck**, it is removed and cannot be resubmitted.

If the telephone company user enters **runxcheck** and the crosscheck job fails to go to the queue, all error messages are sent to the WECO login for this office. The telephone company user does not see the error messages, as they are not able to correct them. The only exception is if someone is in **de**. The telephone company user is told that someone is in **de** so that he/she can try again later when the person is out of data entry.

Using the following format,

crosscheck -status

the user can see if there is a sleeping crosscheck job for this office. If there is, **crosscheck** tells the user what options were requested for the crosscheck run and when it was submitted.

Using the following format,

crosscheck -remove

the SEE can remove a sleeping crosscheck job. If **crosscheck** is run with the *-remove* option, the user is shown the status of the sleeping crosscheck and asked to verify that he/she really wants to remove it.

The **crosscheck** command is submitted to the jobs queue and is run when system resources allow. Upon completion, the user is notified via the **letter** command. Its status (either queued or running) may be checked via the **jobs** command.

NOTE: If the database is **thawed**, **crosscheck** must be rerun before mapping is allowed to run.

6.5 The "THAW" Command

The **thaw** command unlocks the database (see Figure 3) once it has been locked by the **crosscheck** command. When the database is locked, all users have only review permission on all input forms. Once **thaw** has been executed, the user again has the same database privileges in the **de** command ("Insert", "Review", "Update" and "Delete") that were allowed prior to the database lock.

thaw, executed simply as

thaw

is a restricted command that can be executed only by the Lucent Technologies Line Engineer.

NOTE: If the final crosscheck output or mapping output is good, do not thaw the database.

6.6 The "MAPPING" Command

The **mapping** command creates the 5ESS-2000 Switch data structures (base relations) from the input forms database (see Figure 3). It is executed after all of the office data has been entered, using the **de** command, and verified using the **crosscheck** command.

mapping is a restricted command that can only be executed by the Lucent Technologies Line Engineer after a crosscheck run has been made. It is the responsibility of the line engineer to ensure that the database is complete and error-free before executing the **mapping** command.

The following progression of commands is recommended for the **mapping** procedure:

1. Enter "crosscheck" to error check the database and automatically lock the database.
2. If there are level 3 errors, then issue the **thaw** command, which unlocks the database and allows database updates. Correct errors, and re-execute the **crosscheck** command.

NOTE: If the database has been thawed, **crosscheck** must be re-run before mapping can be run.

1. Enter **mapping** to create the base relations.

The format of the **mapping** command is

mapping

If the line engineer wishes to produce the machine bootable database immediately following the mapping process, he may execute

mapping dbgen

which submits the **dbgen** command to the jobs queue. These two steps may also be done separately (see the "DBGEN" command).

Note that **mapping** does not error check the data. The **mapping** command presumes that all data in the database has been verified, i.e., the data is complete and error-free. Mapping from an incomplete or incorrect database may silently generate inconsistent or erroneous base relations.

The mapping command is submitted to the jobs queue and will be run when system resources allow. Its status (either queued or running) may be checked via the **jobs** command. Upon completion of the job, the user is notified via the **letter** command.

6.7 The "DBGEN" Command

The **dbgen** command is restricted, meaning only the Lucent Technologies Line Engineer may execute it.

The process of constructing a database for the 5ESS-2000 Switch is accomplished by ODA (Office Data Assembly). ODA Provides an on-line method of accepting data (**de**) and produces a set of relation source files (**mapping**). The **dbgen** command is the process that accepts these relation source files as input and

Copyright © 2006 Lucent Technologies

generates the machine readable database that can be pumped to the SMs or booted in the CP.

The line engineer must execute

dbgen

after all data has been entered (**de**), error checked (**crosscheck**), and successfully mapped (**mapping**) to generate a fully populated Office Dependent Database for the 5ESS-2000 Switch.

The **dbgen** command is submitted to the jobs queue and will be run when system resources allow. Its status (either queued or running) may be checked via the **jobs** command. When the job completes, the user is notified via the **letter** command.

6.8 The "EDITOR" Command

The **editor** command allows the Lucent Technologies Systems Equipment Engineer to create and edit free-format files. These files are not part of the ODA database. The primary purpose of the edit files is to communicate detailed data from the Lucent Technologies Systems Equipment Engineer to an ODA administrator. The ODA administrators should be notified by the Lucent Technologies Systems Equipment Engineer that they need to be aware of the information stored in an edit file created with the **editor**. This command can also be used to copy for editing and/or printing output files that were previously created by a 5ODA command (e.g., **crosscheck**). The SEEs can use editor to shorten the size of an output file so that they can view or print out a smaller section of the file instead of the whole file.

Several basic file editor functions are available, including the ability to save edit files, and then edit or review them at a later time. The name of the saved file can be specified on the command line,

editor *file-name*

If *file-name* is not specified, the user is placed in a menu displaying options that are available. Included in these options is the ability to edit and/or print a copy of the output of a previously run 5ODA command such as **crosscheck, errforms**, and **records**.

Execute the command, **manual editor**, to obtain more information on the options available through the **editor** command.

6.9 The "SENDIMST" Command

The SMST (Switching Module System Test) and MMST (Multi-Module System Test) processes at OCW (Oklahoma City Works) and Joint Venture factories require databases containing the equipment translations data for the respective Switching Modules and office configurations to be tested. The SMST database may contain data originating from many different offices and transmitted by different Lucent Technologies engineers. The MMST database will contain data for only one office.

The SEE handbook software schedule should be referenced to determine the date when the SMST/MMST processes need this data. It is critical that before the office data is sent to the factory via the **sendimst** command, that the System Equipment Engineer execute the **crosscheck weco** command to ensure that the data is error free. When the data is found to be error free, the Lucent Technologies line engineer should execute one of the following commands to transmit the equipment data to the factory for testing.

For U.S. Market offices:

sendimst *[-n] [-s]*

Copyright © 2006 Lucent Technologies

For international offices processed in the U.S.:

sendimst *[-s]*

For international offices not processed in the U.S.:

sendimst *[[mach1!...!]dest_mach]*

For DSN and toll offices only, the **sendimst** command generates the standard trunk and routing data to support site installation call traffic testing. Toll simulation data is dependent on stable and accurate office equipment information and is therefore generated at this time. Standard toll generation occurs only once per toll/DSN office. This type of toll generation only takes place for domestic software releases.

-n - the user does not want to generate standard trunk and routing data with this **sendimst** run. This option is only available for the domestic software releases. Normally, this is only done if the user planned to execute **sendimst** at a later date, and all of the equipment has not yet been entered into the database.

The standard trunk and routing data may also be generated separately by using the **tollsim5** command. See the next section for a detailed description of this command. This data can only be generated once, that is, once it has been inserted into the office database, additional attempts to add it will fail.

-s - used for offices processed in the U.S. to suppress the hard-copy notification that the factory has successfully received the equipment data. Normally, a printout is sent to the region via the **prtoreg** command when the data is loaded at the factory. The user is asked to verify the destination for the printout when **sendimst** is run. If the *-s* option is used, only electronic mail is sent.

dest_mach allows offices processed outside the U.S. to specify the target machine for their send. The destination machine defaults to *ocoda0* unless another machine is specified. If another machine or path of machines is specified, the necessary permissions must be in place to allow the electronic transfer of the data.

A log file is maintained containing the date of the last **sendimst** run, for each 5ODA office. This log file has the line engineer's initials appended to the file name (e.g. "imstlog.abc"). The logfile may be viewed by executing the **listf** command (e.g. **listf imstlog.abc**).

If the data is being resent, the user is prompted to enter the reason for the resend (the text detailing the reason should be entered followed by a line containing only a "."). The reason will be sent to the factory engineers along with the data.

If a Telephone company person is in data entry, the user is asked if he/she wishes to continue. If he/she does want to continue, the user is be asked if the database should be thawed after **sendimst** completes. If yes, the database is thawed whether **sendimst** completes successfully or not.

6.10 The "GENTLINE" Command

The **gentline** command is used to generate test lines for SLATTS high volume call processing testing. The line data is generated according to requirements specified in the SLATTS Volume Test Lines section of the TG-5 (see Division 2, Section 2M).

The **gentline** command prompts the user for a starting TN. It then sequentially generates test lines beginning with the starting TN. Eight test lines are generated for each line unit defined on the EQLUP form (ten test lines for each 10:1 Concentration Ratio line unit). Upon completion, **gentline** prints a summary of the lines loaded into the office database.

Copyright © 2006 Lucent Technologies

6.11 The "TOLLSIM5" Command

The command **tollsim5** is to used to generate standard trunk and routing data. Under normal office processing, this command will be called by **sendimst**.

If the *-n* option is specified when **sendimst** is executed, however, the standard trunk and routing data are not be generated, therefore, **tollsim5** is not called. This may be desirable, if the System Equipment Engineer knows he/she will be adding more equipment after sending the database to Oklahoma City. In this case, the SEE may execute **tollsim5** separately from **sendimst**.

6.12 The "PRTOREG" Command

The **prtoreg** command is executed by the Systems Equipment Engineer to produce hard copy listings of previously generated **crosschecks, records, errforms** and **summary** outputs at the individual data centers. It can also be used to produce hard copy listings of files produced by the **editor** command and the output of the **manual** command.

This command creates the same output as **listf, listxk,** or **manual**, but the output is sent to the data center instead of to the attached local printer. The first option to the **prtoreg** command is always **listf, listxk**, or **manual**. When the first option is **listf**, the remaining options should be the same as the **listf** command options. Refer to the **listf** section in this manual for more information on the **listf** options, in paragraph Section 4.18 , "The LISTF Command".

The usage of the **prtoreg** command with the **listf** option is as follows:

prtoreg listf*[-u] [-cN] [-r] [-n] [-errors][-summary]*
[-number][command-name[.initials]] [-changed]

If the first option is **listxk**, the remaining options should be **listxk** options. The usage of the **prtoreg** command with the **listxk** option is as follows:

prtoreg listxk*[-cN] [-number] [-summary |*
[-llimit] [-nf | -rl1l2] [errors]
[warnings] [package ...]]

If the first option is **manual**, the remaining options should be **manual** options. The usage of the **prtoreg** command with the **manual** option is as follows:

prtoreg manual *[manual-page(s)] [every]*

The *-s* option normally associated with the **listxk, listf,** and **manual** should not be used with the **prtoreg** command because it does not apply to **prtoreg**.

If the size of the output exceeds 5,000,000 bytes, it is divided into multiple print jobs to avoid network congestion problems. The name of each job includes a sequence number so the output can be reassembled in the proper order.

The **prtoreg** command gives the user an option to redirect the output to a region other than the one determined from the order number. For example:

Central Region "CE"
Eastern Region "EA"
Southwest Region "SW"

Southern Region "SO"
Indian Hill Main "IH"
Indian Hill South "IX"
Indian Hill Park "IHP"
Indian Hill West "IW"
Network Software Center "OPR"

6.13 The "OFFLOC" Command

The **offloc** command prints information on offices located on production machines.

offloc *[base_and_control | all]*

base and control - reports the office's order number, order type, and the production machine on which it resides.

all returns a complete list of all production offices on the current machine; they are presented in column format, sorted by base and control. This command may be helpful to the user working on several offices located on different 5ODA production machines.

7. SERVICE PROVIDER COMMANDS

Service Provider data engineers are responsible for ensuring the accuracy of the line and trunk data for the switch office. The SEE (Lucent System Equipment Engineer) will work with the Service Provider data engineer to resolve any data conflicts blocking the completion of the ODD (Office Dependent Data) build.

To simplify the process interface for the Service Provider data engineer, users are greeted with a menu-based interface that displays the valid operations that may be performed at a given time. Depending on what other activities are taking place, the contents of this menu may expand or contract.

A complete list of the operations includes the following:

Available steps for dangd0(daginittest):

1. List error forms output
2. List crosscheck output
3. List records output
4. List contents of datasets
5. Data Entry (REVIEW) forms
6. Data Entry (EDIT) forms
7. Scan (5ed REVIEW) forms
8. Run crosschecks
9. View email
10. Change login password

Select a step to run (or "q" to quit):

The office Base_and_control appears in the heading of the menu and the order number appears in parentheses next to it. The user may enter the number associated with the operation to be performed to run that particular application. Note that the index values for each operation may change, depending on whether the preceding operations are available to be run.

Each of these operations are detailed below.

7.1 List error forms output

This step provides access to view output from one or more runs of the intra-form checks processing. If output from multiple runs exists, the user ise prompted to select one for viewing:

Available errorforms output:

1. 5e17,1.p11.0 Errors/Summary run #001 by life (May 21 16:20, 9125 bytes)
2. 5e18,1.g14.0 Errors/Summary run #002 by life (Aug 30 15:22, 12011 bytes)
3. 5e18,1.g14.0 Allforms/Summary run #003 by life (Sep 3 11:48, 2157402 bytes)

Select L1/L2 output to view/print ("q" to quit):

The list is arranged from the oldest to the newest. The description provides information on the 5ESS Software Release used, what kind of run was requested, the login ID of the user who requested it, when it completed, and how large is the output.

When the user selects some output to view, the user will see another menu list to determine how the user would like to view the output. Suppose the user selected menu item number 3 in the previous list. Next, the user would see the following:

Available options for 5e18,1.g14.0 L1/L2 output #003 by life:

1. Display summary and allforms
2. Display summary only
3. Display allforms only
4. Send allforms output to printer
5. Remove allforms output for this run

Select an option ("q" to quit):

This menu allows the user to select the type of information to view. Please note that option 4 in the above menu is only available for those sites supporting the UNISON network printing. Other sites may only view the information at the terminal screen. Selecting an item allows users to display the output to the screen for viewing in a paged format.

Note that the last menu item allows the users to attempt to remove the output for the selected run, provided they have permissions to do so. The user may exit each screen by entering a "q" to quit. The system will

return the user to the previous menu until the suer quits out of the initial menu to exit the step.

7.2 List crosscheck output

Similar to the previous step, this step provides access to view output from one or more run of the inter-form checks processing. If output from multiple runs exists, the user will be prompted to select one for viewing:

Available crosscheck output to list includes:

1. save_xk.001 (5e17,1.p11.0/1 May 22 15:30)
2. current (5e18,1.g14.0/1 Sep 3 14:52)

Select a crosscheck run to list ("q" to quit) [current]:

The list is arranged from oldest to newest runs. Previous runs are stored as "save_xk.###". In parentheses, the 5ESS Software Release information and the time that the crosscheck run was completed is stored. The user may select output to view by entering the index number or, in this instance, you may view output from the most recent run merely by hitting the carriage return. The "[current]" string at the end of the selection prompt means that, if an empty new line is entered, the command will assume that you want the most current output and will display that for you.

7.3 List records output

This step allows you to view ODA office records output. Due to the size of these products, only output from the latest run is retained and available for viewing. If output exists, the user is prompted to select a records file to view via the following:

The user may enter regular expressions or multiple space-separated names:

Enter "*" to view all of the files under records_recs

Enter "ls" for a listing of the files under records_recs

Enter "q" when finished

Enter file name(s):

As indicated by the instructions, entering a "*" results in the display of all of the records generated when the SEE submitted the last records request. Entering "ls" displays a listing of each of the files found under the records output directory. When the user wishes to exit this step, the user needs to enter a "q".

Suppose the user entered, "5000", at the "Enter file name(s):" prompt. The user then sees another prompt requesting where the user would like the output directed:

Available options for records_recs listings:

1. Display listings to terminal
2. Send listings to printer

Select an option ("q" to quit):

Please note that, as in the previous steps, the printing mechanism is only supported for those sites using the UNISON network printing package. If UNISON is not available at your location, then the user may only display the records output to the terminal screen.

Once the user has completed viewing the records output, the user is returned to the first prompt above, allowing selection of other records-related operations. A "q" is enterted to complete the desired transactions

7.4 List contents of datasets

This step is very similar to the records listing step from an interface standpoint. In addition to the records output, however, this step allows the user to select from a list of other directories to view their contents as well.

If this step is selected, the following menu is displayed:

1. crosscheck_xk
2. errorforms_xk
3. records_recs
4. prntfiles_dir
5. dbgstds_rpts
6. mddlog_dir
7. sm2disk_rpt
8. tmp

Select a directory to view ("q" to quit):

Entering the index value of the directory whose contents the user wishes to view yields the next prompt. Suppose the user selects menu item 1. The user sees the following prompt:

The user may enter regular expressions or multiple space-separated names.

Enter "*" to view all of the files under crosscheck_xk

Enter "s" for a listing of the files under crosscheck_xk

Enter "q" when finished

Enter file name(s):

The user may enter a "*" to select all of the files, "ls" to generate a listing of the contents of the selected directory, "q" to quit, or the name(s) of the file(s) to view. If file names or "*" is entered, another prompt requestd how to direct the output:

Available options for crosscheck_xk listings:

Display listings to terminal

Send listings to printer

Select an option ("q" to quit):

Please note that, as in the previous steps, the printing mechanism is only supported for those sites using the UNISON network printing package. If UNISON is not available at your location, then the user may only display the records output to the terminal screen.

Once the user has completed viewing the output, the user is returned to the first prompt above, allowing selection of other data to view. Enter a "q" when the desired transactions are completed.

7.5 Data Entry (REVIEW) forms

This step allows the user to view ODA forms when no edits are needed or desired. It also makes access to the forms possible when other operations have seized control of the ODA forms database in such a manner as to prevent edits. See the next step for details on the available operations and how to use this command interface.

7.6 Data Entry (EDIT) forms

The interactive data entry command allows the user to enter, change, review or delete data in the database. The 5ODA system uses the general purpose ODIN system to perform these interactive data entry capabilities. In the data entry step, select a form and then enter or change the data associated with a single form instance on the specified form (e.g., customer telephone number 5551313). Figure 9 is a list of examples of the forms associated with a User Group (line, trunk, or weco). In the example above, customer TN (Telephone Number) 555-1313 is a form instance on the line form.

Information is error checked as it is entered with error messages displayed at the bottom of the user's CRT screen. The data entry step performs two levels of data checking:

Level 1 checks are range and syntax checks of a single field and

Level 2 checks are error checks performed between items within the same instance of a logical form.

While in the data entry step, the user can request that the current form instance displayed on the CRT screen be saved in a file for later access in the list contents of a dataset step. Screen images will be stored under the prntfiles_dir directory. Any number of form instances can be saved by responding to Enter Review, Change-insert or Print with a "p".

The step prompts for form name and database operation unless these parameters are passed in from the command line. The next section explains the prompts in detail.

Form selection

When the data entry step displays the form selection prompt "Enter name of form:", the user can make one of three valid responses:

a valid form name followed by **<return>** (e.g., mlhg)

enter **<help>**followed by **<return>**to produce a list of all the forms and database operation permissions that the user is allowed to access (see Figure 4)

NOTE: This "help" command must be entered with angle brackets on either side: **<help>**

· or press **<return>** to exit the data entry step.

If the user specifies a valid form name , the data entry step verifies that the user is allowed access to that form type (line, trunk, or weco) and proceeds to the database operation prompt. If access to the specified form type is denied, the step displays

The user is not allowed access to this form. Enter name of form:

The user must then use one of the three options described above. If the user incorrectly enters a form name, the step displays

Invalid form specified: lne. Try again. Enter name of form:

If the user responds with **<help>**, the step displays all the form names the user is allowed to access, along with the database operation permissions that he has been granted for each form. Figure 4 shows a sample of **<help>** message in the data entry step. In that example, the user is allowed to access 11 different forms, and "review" (read only) seven of the forms (indicated by the "r" preceding the form type), but the user can "insert", "review", "update" and "delete" only four of the forms (indicated by the "irud" preceding the form name). Using this **<help>** list, the user can then choose a valid form name. When the user includes the form name on the command line, the user bypasses the form selection prompt and is given the database operation selection prompt. With this option the user can only operate on that form during the session.

Please note that Service Provider data engineers may only edit non-equipment related forms. The equipment forms may be accessed, but no edits are allowed.

Database Operation Selection

After the user has selected a form, a database operation must be specified. When the data entry step displays the database operation prompt "Enter Data Base Operation Code:", the user enters one of the following four valid database operations-**i** , **r**, **u** or **d** - followed by **<return>**.

i

- to insert a new form instance in the database.

r

- to review without changing an existing form instance in the database.

u

- to update an existing form instance in the database.

d

- to delete an existing form instance from the database.

The database operation prompt displays only those database operations that the user is permitted to use for the selected form (see Figure 5). If the user is allowed only one of the four operations (usually "review"), de does not display the prompt since the user has no choice, but moves directly to a full-screen display of a "blank" form instance of the selected form (see Figure 6 and Figure 7).

The command line also accepts an operation (**r**, **i**, **u**, **d**) when the form type is entered on the command line. The user is placed into that operation for that form, bypassing the form selection and database operation

Copyright © 2006 Lucent Technologies

prompt. If the user is not allowed to make that operation, a message is printed telling the user that he/she will be placed into review mode. With this option the user can only execute that operation on the given form for that session.

Database Operation Restrictions

In some cases update and delete operations may be restricted for a single form instance rather than for an entire form. These restrictions would most likely be applied for retrofit or off-line growth offices. The restrictions would probably be applied to data that has been dumped from an existing 5ESS-2000 Switch.

In addition to form and database type, the restrictions are based on a particular data field found on each form instance. It will be located in different areas on the form, but is generally on the last (or only) page in the top right corner. The legal values are:

E - data dumped from an existing 5ESS-2000 Switch.

C - data from an existing switch that has been changed.

N - new data that has been added to existing data.

The field may also be blank.

The user is not restricted from choosing the update or delete operation. However, before the actual update or delete is performed, a check is executed to determine if the operation is allowed. If the chosen operation is restricted, the user receives one of the following messages, depending on the operation chosen:

Deletes are not allowed on data of type _ on form type _____.

Updates are not allowed on data of type _ on form type _____.

The user is not allowed to perform the requested operation. An exception to the update restriction is that certain forms may allow non-critical data fields to be updated, overriding the update restriction. On these forms, the user can only position their terminal cursor on those special fields to update. The rest of the fields are shown in a no-change display mode. Depending on the user's terminal type, the no-change fields are displayed at half screen intensity.

Data Entry Session

If the user chooses the insert or update modes, he/she has the facility for changing data values via the change/substitute mode.

Change mode is entered by responding with a "c" to a form operation prompt. The field to be changed is identified by entering the field number in response to the Change field prompt. When the user enters the new data, it is subjected to new error checking. Entering **<return>**, back tab, or abort in response to the Change field prompt, serves to exit change mode and the cursor moves to the form operation prompt. If the user enters a field number that is not on the current screen (multi-screen forms), then the appropriate screen is displayed automatically and processing continues.

Substitute mode is a facility for changing data values in a form. Substitute mode differs from change mode in that it allows substitution of strings within a field rather than forcing the user to re-enter the entire data value when it is necessary to change a field. A field to be changed is identified by entering a field number in response to the Substitute field prompt. In addition to the field number, the operator must respond to the From string: and To string: prompts which identify the existing string and the replacement string within the field, respectively. Normal data checking is then performed on the new field. Care must be observed when using the

Copyright © 2006 Lucent Technologies

substitute mode to uniquely identify the string of data within the field to be changed.

If the user enters a field number that is not on the current screen (multi-screen forms), then the appropriate screen is displayed automatically and processing continues. Entering **<return>**, backtab or abort in response to the Substitute field prompt serves to exit substitute mode and the cursor moves to the form operation prompt.

Once a database operation has been specified, a "blank" form (or the first screen of a multi-screen form) is displayed. If the backtab (<) control character is entered in the first field of a form, the system terminates the current database operation and returns the operator to the form type selection prompt. If the backup (^) control character is entered in the first field of the form, the system terminates the current database operation and returns the user to the database operation prompt. The screen is not cleared before displaying this prompt, making operation switches on the same form type a quick process. The operator may respond with a database operation code (i, r, u or d) or a control character as described above. (See Figure 2 at the back of this manual.)

To exit from the data entry step, the user responds to the form selection prompt Enter name of form: with **<return>**.

The user is provided with a complete set of data entry control characters which conserve keystrokes and allow navigation through the form displayed on his CRT screen (see "Figure 2 : "5ODA Data Entry Control Characters"). Navigational control characters may also be attained by entering a "?" during data entry.

Once the user has entered the data entry step, depending on the database permissions, he/she can insert a new form instance; review, update or delete an existing form instance; or request that the current form instance be printed.

7.7 Scan (5ed REVIEW) forms

The scan step is an interactive command that allows the user to examine an office's input form or base relation data. The files are viewed over consecutive screen images with one column per attribute. When executed, you will see the following prompt:

Enter (input form name | base relation name | /expr | **<return>** | "q"):

Enter (input form name | base relation name | /expr | **<return>**| "q"):

Once a form name has been entered, the scan step provides help, by typing "h" followed by **<return>**. Suppose the **eqim** form was requested. We do the following to enter the help section:

eqim: h

Help Menu:

---

0 DISPLAY ALL HELP SECTIONS

1) SCREEN FORMATTING

2) RECORD SCANNING

3) RECORD SELECTION

4) FIELD INFORMATION

5) WRITING RECORDS TO A FILE

6) MULTIPLE FILES

7) HELP

8) QUIT

Enter help section number(s) [1 or 1,3,4]:

To view a particular item, type the index number followed by **<return>**. Next is what is contained in each help section:

1) SCREEN FORMATTING:

(c|a) - display fields that can be cut/added.

(c|a)n - cut/add field n.

(c|a)1,2,...n - cut/add fields 1,2...n..

(c|a)n- - cut/add all fields starting from field n.

(c|a)n-m - cut/add fields in range n to m.

(c|a)* - cut/add all fields.

(c|a)/expr - cut/add fields by name using this regular expression.

p[(l|w|f)] - display current page settings.

p(l|w)n - change page length/width to size n.

p# - toggle field number headers printing on and off.

2) RECORD SCANNING:

(f|b) - forward/backward.

(f|b)n - forward/backward from record n.

(f|b)+n - forward/backward from +n records.

(f|b)-n - forward/backward from -n records.

(f|b)p - forward/backward one page.

return-key - one page. (forward or backward mode).

3) RECORD SELECTION:

Setting Selection Criteria:

#/expr - field_number/selection_expression.

n fld/expr - field_name/selection_expression.

N[p] fexpr/expr - field_name expression/selection_expression.

m fexpr/expr - match field_name expression /selection_expression.

e/expr - every field/selection_expression.

To select forms that do not match an expr replace the "/" with an "!".

Executing Selection Criteria:

r - current record, or number of matching records.

r# - set current record position at record #.

+ - next record from current record.

- - previous record from current record.

[g]// - [global] record selection.

? - display current selection criteria.

* - CANCEL current selection criteria.

4) FIELD INFORMATION:

- display field name and selection criteria for this field number.

n fld - display field number and selection criteria for this field name.

5) WRITING RECORDS TO A FILE:

w [file] - write screen image to file. File name has user's initials appended to it. Program will generate a name if not specified.

6) MULTIPLE FILES:

lf [/expr] - list current form names [optional /expr].

lr [/expr] - list current relation names [optional /expr].

^ - current editable files.

^ file_name [sort] - edit file_name [option to sort].

^ /expr - list forms or relation name that match expr

Copyright © 2006 Lucent Technologies

7) HELP:

h [0,1,...,n] - displays a help menu for the different commands. If the optional section number(s) are include those section are displayed.

8) QUIT:

q - quit the session.

Key attributes are underlined and repeated on each screen image. The step assumes all attributes are to be viewed. When the screen size is too small then attributes are divided over multiple consecutive screens. For convenience the screen images can be reformatted and customized to view only attributes and data of interest. This is accomplished using the **cut** and **add** commands interactively within the step. Records can be scanned in a forward or backward direction in a continuous or single page mode.

To exit from the step, type in the letter "q" (for quit) in response to the prompt (:).

7.8 Run crosschecks

When activated by the Systems Equipment Engineer (SEE), this step will appear in your menu list. It allows the Service Provider Engineer to execute both the errorforms (intra-form checks) and crosschecks (inter-form checks) to validate any changes that were made. Once the command completes, if any errors occurred, you will be notified by email. The errorforms output may be viewed by running the **List error forms output** step above and the crosscheck output may be viewed by running the **List crosscheck output** step above.

7.9 View email

Any step failures or interaction from steps the user runs may be reported to the user in his/her office's mailbox. Each 5ESS Switch office has a mailbox set up on the ODA system. The user's email may be accessed using this step.

7.10 Change login password

The 5ODA system allows the user to change his/her password at any time using this step. When invoked, the system prompts the user for both the existing password and a new password. Since neither the old password nor the new password appears on the screen as hte user types it in, the user is asked to type in the new password twice to insure that it is not mistyped.

The new password must be at least six alphanumeric characters. The password must contain at least one non-alpha character. The user must use the new password the next time he/she logs on.

- **CAUTION:** Because there is no way for the system administrator to determine a user's password, the user is responsible for remembering his/her own password and recording the password in a secure place.

5ODA USER COMMAND SUMMARY

COMMAND	FORMAT AND DESCRIPTION
The following is a list of the valid 5ODA Telephone Company and Lucent Technologies commands that can be entered whenever the 5ODA command level prompt ("ENTER COMMAND:") is displayed at the user's CRT terminal. In all cases the command must be followed by the **<return>**.	
TELCO and WECO Commands	

allforms	**allforms** *[form-type(s)] [lines] [trunks] [weco] [every] [deficient]* Produces all form instances of one or more specified form types present in the database in CRT screen image format.
dbstatus	**dbstatus** Prints whether the database is frozen (locked) or thawed (unlocked).
de	**de** *[form-type [operation]]* Interactive entry of office data into the database via forms displayed on the user's CRT screen.
errforms	**errforms** *[form-type(s)] [lines] [trunks] [weco] [every] [deficient] [-nf]* **Produces the requested form instances of a form-type(s) that contains errors and/or warnings in CRT screen format.**
helpenv	**helpenv** *[commands | office | forms | records | offloc]* Displays useful 5ODA information.
jobs	**jobs** *[-all | -f]* Prints jobs that are still in the jobs queue.
killjob	**killjob** *[records | crosscheck | mapping | dbgen]* Cancel a job still in the jobs queue that you have submitted.
letter	**letter** *[line | trunk | weco]* Prints or sends messages.
listf	**listf** *[-u] [-s] [-cN] [-r] [-n] [-errors] [-summary] [-number] [command-name[.initials]]**[-changed]*** **Lists the output of the indicated command name at the user's hard-copy line printer or at the user's CRT screen.**
listxk	**listxk** *[-cN] [-number] [-s] [-summary| [[-nf | -l1l2] [-llimit] [errors] [warnings] [package. . .]]* Lists the output of the "crosscheck" command at the user's line printer or at the user's CRT screen.
manual	**manual** *[command-name(s)] [every] [-s]* Prints manual page(s) of 5ODA user commands.
news	**news** *[item . . .]* Prints computer system news.
online	**online** Lists other users with the same base and control currently on the system.
password	**password** Changes a password.
prspeed	**prspeed** *(low | med | hi)* Decrease or increase printing speed.
records	**records** *[record-type(s)] [lines] [trunks] [weco] [every]* Produces office records.
remove	**remove** *[filename]* Removes a file from storage.
restrict	**restrict** Reports on forms that have database operation restrictions.
runxcheck	**runxcheck** Submits a sleeping crosscheck job to the queue.
scan	**scan** Interactively examine input form or base relation data.
suggest	**suggest** *[status]* Suggest an enhancement to the 5ODA tools.
summary	**summary** *[form-type(s)] [lines] [trunks] [weco] [deficient]* Generates a summary of one or more specified form types present in the database.
tlock	**tlock** Secures unattended terminals.
WECO Only Commands	
crosscheck	**crosscheck** *[[anyway | weco] [-print] [-thaw] [-sleep]] | [-status] | [-remove]* Verifies the database.
dbgen	**dbgen** Generate the machine loadable database for the 5ESS Switch.
deficient	**deficient** Lists all forms currently defined as "deficient".
editor	**editor** *[file-name] [manual] [list]* Edit files other than ODA database files.
gentline	**gentline**

	Generate test lines for SLATTS volume call processing testing.
groupings	**groupings** *forms | records* Change the groupings of forms or records.
history	**history** Lists processing history for a particular office/AT&T order number.
mapping	**mapping** *[dbgen]* Generates the base relation data structure.
offloc	**offloc** *[base_and_control | all]* List office location for production machines.
prtoreg	**prtoreg** (see **listf**, **listxk**, or **manual** command line) Produce hard copy listings of output from the **listf**, **listxk** , or manual commands at the regional data centers.
sendimst	**sendimst** *[-n] [-s] or sendimst [[mach1!...!]dest_mach]* Send equipment translations input data to MMST and SMST to the factory.
thaw	**thaw** Unlocks the database.
tollsim5	**tollsim5** - generates standard trunk and routing test data.

Figure 1 5ODA USER COMMAND SUMMARY

5ODA DATA ENTRY CONTROL CHARACTERS

Certain data entry control characters are available during the interactive form entry process of the "de" command to provide the user with a means of conserving keystrokes as well as allowing navigation through the form instance displayed on his CRT screen. There are also commands which are informational in nature, such as turning on/off the display of help messages in a session. A few control characters (abort, return and back tab) are recognized as responses to system prompts.

Note that the control characters listed below work on most terminals, but may not work on unusual or unsupported terminal types.

The following control characters are single, printable characters. These characters serve as control characters when they are entered as the first and only character into a field, otherwise they are part of a field value. For example, if the end of form command is invoked by the "$" character, entering a single "$" invokes the command; entering "$$" is not recognized as a command, but as a value and field data checking will occur.

Some terminals are equipped with cursor movement ("arrow") keys and these can be used to quickly move about a form. Cursor movement keys are recognized only at the beginning of a data field; the return key should not be pressed since they are acted upon immediately. Cursor movement keys can be used only for movement between data fields, they cannot be used to back out of the first data field or in response to a system prompt on the command line. The four cursor movement keys and corresponding commands are:

- up arrow invokes back up,

- down arrow invokes return,

- left arrow invokes back tab,

- right arrow invokes forward tab.

If the terminal keyboard has program function keys, pressing PF2 will cause the re-display of the current screen. The key sequence escape Q will have the same effect on most terminal types. If any characters had been entered into a field prior to the re-display sequence, they will be discarded.

If a control character is not meaningful, either in an input field or as a response to a system prompt, then it is ignored and the

Copyright © 2006 Lucent Technologies

cursor returns to its original position.

The following is a list of the control characters, along with their default control characters in parentheses. (For a condensed version of this text, execute the "manual" command specifying "navigate" as the manual page.)

VALUE COMMANDS	
123return	Enter a value into a field. To enter a value into an atomic field, type the value followed by "return".
return	No value or response; skip this field or prompt. Pressing the return key only (no characters entered) serves to keep the current value of an input field and go on. In the case of some system prompts, this signifies no response and results in the display of the next or preceding prompt.
null item (')	Set this atomic field to the null (empty or missing) value. In the case of a non-required field, the current field is set to null and is displayed as a string of underscore (_) characters. If the field is required, the message "Required Field!" is flashed in the acknowledgement area and the cursor returns to the beginning of the field.
default value (;)	Set this atomic field to its default value. If a default value exists, it is assigned to the current field. If no default value exists, processing continues as if null item had been entered (see above).
NAVIGATIONAL COMMANDS	
Back up (^)	Back up to the previous field. The current field remains unchanged and the cursor moves to the previous field. If the previous field is a structure or list, the cursor moves to the beginning of the field; if the previous field is on another screen (multi-screen forms), then that screen is automatically displayed. If used repeatedly within a list, the cursor backs up to the beginning of the current row and then backs up within the first column to the beginning of the list.
forward tab (>>)	Skip forward to the next "tab stop". When this command is invoked, the current field remains unchanged and the cursor moves to the next tab stop. If no tab stop exists between the current field and the end of the form, the cursor moves to the form operation prompt on the command line. If the next tab stop is on another screen (multi-screen forms), then that screen is automatically displayed. If a required field that is empty is encountered en route, then the message "Required Field!" is flashed in the acknowledgement area and the cursor moves to that field. If entered when the cursor is positioned at the beginning of a row of a list, the cursor moves to the next tab stop as described above. If the cursor is within a row, but not at the beginning, it is positioned at the beginning of the next row.
back tab (<<)	Back up to the previous "tab stop" or prompt. The current field remains unchanged and the cursor moves to the previous tab stop. If the previous tab stop is on another screen (multi-screen forms), then that screen is automatically displayed. If no previous tab stop exists, the cursor is positioned at the first data field. If entered when the cursor is positioned at the beginning of a row of a list, the cursor moves to the previous tab stop as described above (the first row if the list is tabbed). If the cursor is within a row, but not at the beginning, it is positioned at the beginning of the current row.
next form ( ))	Retrieve next form.

	If entered into the first keyfield of a form and in a retrieval mode (review, update, delete), the "next" form in the database is retrieved (see "Sequential Retrieval").
previous form (( )	Retrieve previous form. If entered into the first key field of a form and in a retrieval mode (review, update, delete), the "previous" form in the database is retrieved (see "Sequential Retrieval").
end of form ($)	Skip to the end of form. The current field remains unchanged and the cursor moves to the form operation prompt on the command line. If a required field that is empty is encountered en route, the effect is the same as if forward tab had been entered (see above).
execute (*)	Skip forward to the end of form and perform the form operation. Processing continues as if end of form (above) had been entered, followed by the appropriate form operation code (see Database Operations in Section 4.8). This command can also be entered in response to a form operation prompt and will match the current operation code.
abort (!)	Abort this operation. If entered into a data field, the active form is discarded, an "aborted" message is flashed in the acknowledgement area, and the cursor moves to the first key field. If entered in response to a command line prompt, this command serves to abort the active form. (See "Database Operations" in Section 4.8). If entered while in change or substitute modes, this command aborts the change attempt and the cursor returns to the form operation prompt. (See "Database Operations" in Section 4.8).
LIST VALUE COMMANDS	
These commands are recognized only when at the first atomic field in a row of a list.	
null row (")	Set the current row to null values. Each atomic field in the current row is set to the null value. The cursor returns to the beginning of the current row.
default row (:)	Set the current row to default values. Each atomic field in the current row is set to its default value. The cursor returns to the beginning of the current row.
insert row (})	Insert a new row at the current location. This command is recognized only for compressed type lists. Each row, from the current row to the end of the list, is "pushed down" and a null row is inserted at the current row location. The cursor returns to the current (null) row. If the list is "full" (no null rows), then the message "List is FULL!" is flashed in the acknowledgement area and the cursor returns to the current row.
delete row ({)	Delete the current row. This command is recognized only for compressed type lists. The current row is discarded and each row, from the next to the last, is "pushed up" one row position. The last row is set to null values. The cursor returns to the current row location.
copy row (=)	Copy previous row. The previous row is copied to the current row. The cursor returns to the current row.
LIST NAVIGATIONAL COMMANDS	
These commands are recognized only when at the first atomic field in a row of a list.	
previous row ([)	Back up one row. The cursor moves "up" to the beginning of the previous row in the list. If the current row is the

	first row, processing continues as if back up had been entered.
next row (])	Skip to next row. The cursor moves "down" to the beginning of the next row in the list. If the current row is the last row, the cursor moves to the next field.
end of list (#)	Skip to end of list. The cursor moves to the next field following the current list.
INFORMATIONAL COMMANDS	
These commands are recognized in all database operation modes when entered into a field, but not in response to a system prompt.	
help messages (?)	Turn on/off help message display. If help messages are currently being displayed, entering this command will turn off this display starting with the next atomic field. If they are not currently being displayed, and a help message exists for the current field, then it will be displayed on the help line. If no help message exists, then the message "No help available." will be flashed in the acknowledgement area. In all cases the cursor returns to the current field.
current mode (.)	Display current database operation mode. The current database operation mode is flashed as a message in the acknowledgement area (e.g., "Insert mode") and the cursor returns to the current field.

Figure 2 5ODA DATA ENTRY CONTROL CHARACTERS

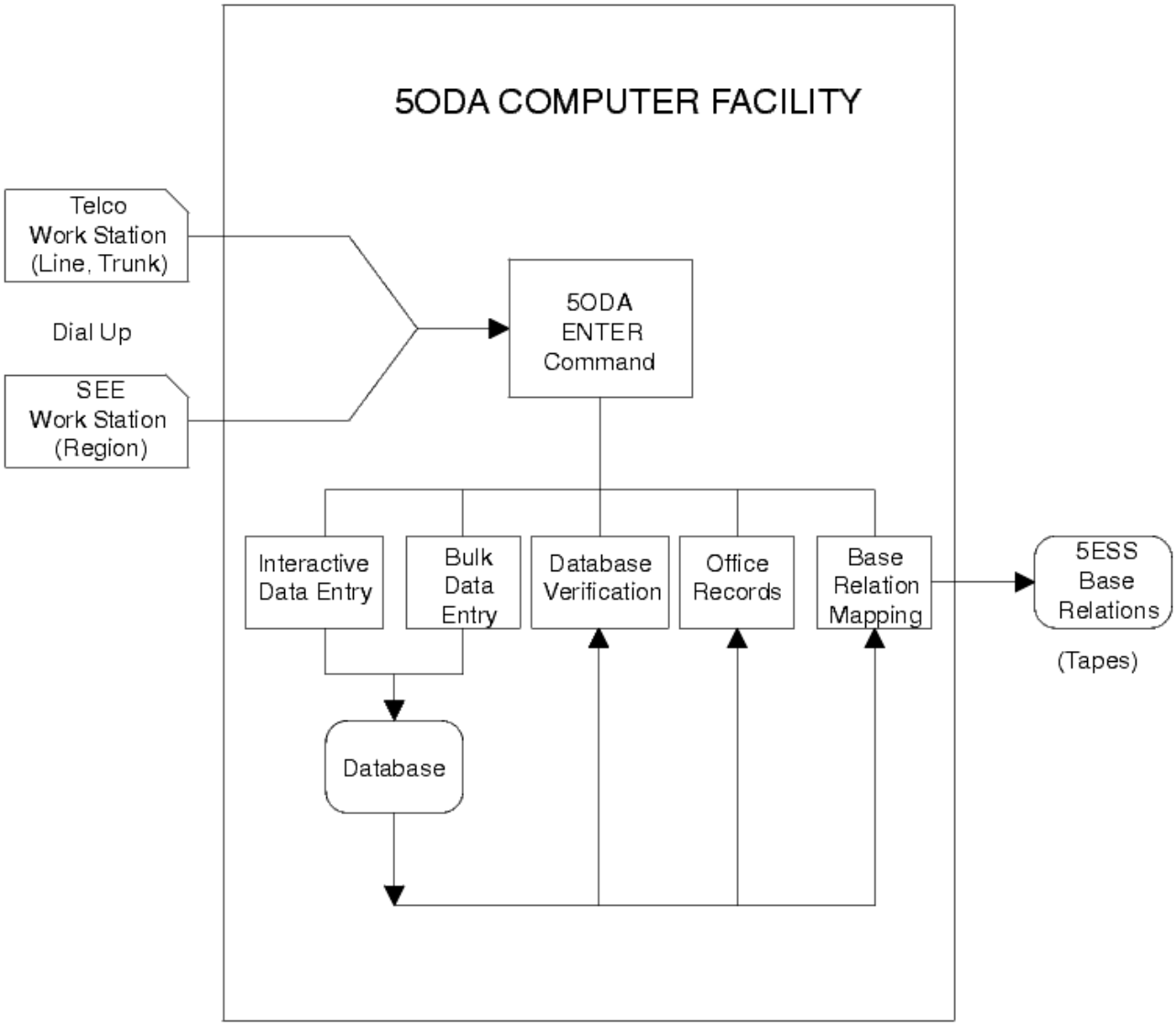

Figure 3 5ODA PROCESS

```
system:     "ENTER COMMAND"
user:       "de"
system:     "Enter name of form:"
user:       "help"
system:     r: conv
            r: das
            irud: lcc
            irud: line
            irud: mlhg
            irud: mlhln
            r: rate
            r: rtidx
            r: scrn
            r: tkgrp
            r: trunk
```

Figure 4 EXAMPLE OF <HELP> IN de COMMAND

```
system:        "ENTER COMMAND"
user:          "de"
system:        "Enter name of form"
user:          "tkgrp"
system:        "Enter Data Base Operation Code"
               "I=Insert R=Review U=Update D=Delete"
```

Figure 5 EXAMPLE OF DATABASE OPERATION PROMPT IN de COMMAND

```
SCREEN 1 OF 3                    5ESS Switch
line                     OFFICE DATA ADMINISTRATION
(5109-1/2/3/4)                TELEPHONE NUMBER

                                                   EQUIPMENT
*  1. TN        _______     17. FLS      N     29. COIN      N
      NEW TN                18. SUSO     N     30. GST       N
#  3. RAX       __          19. DNY ROH  N     31. TSTLINE   N
#  4. LCC       ___         20. PALIT    N     32. GNDREF    N
   5. OE  TYPE  _           21. COMPL    N     33. RANGEX    N
        NUMBER  __________   22. SLUS     N     34. LNEQ      N
   8. RTI       ____        23. DTLBILL  N           MISC FEATURES
   9. PTY       I                              35. SERHLN       _______
  10. MFRI      N           24. TRAFFIC  N         BCK LNK
  11. CIDIAL    ______                         37. ALT BILL TN  __________
  12. PIC       ___          TERM FEATURES     38. NO DIAL      N
   ORIG FEATURES            25. SUST     N     39. HOT LINE TN  _________________
  13. TTC       N           26. ICP      N     40. TEST CODE    ______
  14. BRCS      N           27. DNY BV   N     41. BUSY MONITOR N
  15. EL        N           28. TRC      N     42. ATT MLHG     ____
  16. FGA       N                              43. RBV TGN      ____
```

```
SCREEN 2 OF 3                    5ESS Switch
line                     OFFICE DATA ADMINISTRATION
(5109-1/2/3/4)                TELEPHONE NUMBER

  44. ANI7          N                    55. SHARED     N
  45. TR303 NAILUP  N                    56. PRIVACY    N
  46. RMK           _________________
  47. SA TST ROUTE  N                        LASS FEATURES
                                         57. AC ALW     _
      BASIC 911 ESB                      58. AR ALW     _
  48. RINGBACK      N                    59. COT ALW    _
  49. STATMON       N                    60. PCP ALW    _
  50. TONDET        N                    61. SCA GA ALW _
                                         62. SCF GA ALW _
      SCAN & DIST. POINTS                63. SCR GA ALW _
  51. MESG REGISTER    __________        64. SDA GA ALW _
  52. SLEEVE LEAD CKT  __________        65. UCR        N
  53. MAKE BUSY KEY    __________
  54. CARRIER GRP ALM  __________
```

Copyright © 2006 Lucent Technologies

```
SCREEN 3 OF 3                    5ESS Switch            _
line                      OFFICE DATA ADMINISTRATION
(5109-1/2/3/4)                 TELEPHONE NUMBER

          LTSB                     76. ASP ALW       N
66. ASSOC OE TYPE  _                   SCD SCREENING
           NUMBER  __________      78. CLSS          N
69. LEAD PORT      N               79. MCLD DEACT    N
70. MAN EXCL       N               80. BLK 1PLUS     NONE
                                   81. LONG DST DR   N
    4-WIRE SPECIFICATIONS
71. ROUTING RINGING    _____
72. PRIORITY RINGING   ______
73. AUDIBLE RINGING    _
74. INC. START SIGNAL  ________
75. CONFERENCE BRIDGE  _
```

Figure 6 DISPLAY OF LINE FORM IN de COMMAND 5E8 SOFTWARE RELEASE

```
SCREEN 1 OF 5                    5ESS Switch
trunk                     OFFICE DATA ADMINISTRATION
(5204-1/2/3/4,5271-1/2/3/4)         TRUNK

*1. TGN            ____             16. OUT START DIAL ____
*2. MEMB           ____             17. CGASPN         _________
 3. QTY            01               18. OTODPN1        _________
 4. TEN            _______          19. OTODPN2        _________
 5. DEN            ________         20. SLC OTODPN3    _________
 6. SLEN           ________         21. SLC OTODPN4    _________
 7. TRKOE          _ __________     22. CLCI TRK ID    ____
10. LTP            ______           23. BRCS           N
11. RAF EN         ______           24. SLVLD SPN      _________
12. TRANS CLASS    __               25. REMOVE TRUNK   N
13. SUPV           ___              26. ISCN           ______
14. IDLE STATE     ON               27. PSCLI          ______
15. IN START DIAL  ________
```

```
SCREEN 2 OF 5                    5ESS Switch
trunk                     OFFICE DATA ADMINISTRATION
(5204-1/2/3/4,5271-1/2/3/4)         TRUNK

      CAMA OPERATOR TRUNKS               CCIS6 TRUNK SIGNALING
28. TRAF SAMPLED         _          37. BAND  ___
29. KEYING TRUNK TGN     ____
30. KEYING TRUNK MBR NO  ____         PRIMARY LINK      MATE LINK
31. TALKING TRUNK TGN    ____       38. SL GROUP __   41. SL GROUP  __
32. TALKING TRUNK MBR NO ____       39. SL MEMB  __   42. SL MEMB   __
```

Copyright © 2006 Lucent Technologies

```
                                   40. SL VLINK _    43. SL VLINK  _
      EDSL/PRI TRUNKS
33. Q921 PROC            NETWORK          DSN FEATURES
34. Q931 PROC            NETWORK    44. EXT. GUARD TIMING   _
                                  45. ANSWER DELAY TIMING N
      ANNC TRUNKS
35. MUSIC SOURCE         N           TSPS TRUNKS
36. MAXCALLS             __         46. NO EXSIG N
```

```
SCREEN 3 OF 5                    5ESS Switch
trunk                     OFFICE DATA ADMINISTRATION
(5204-1/2/3/4,5271-1/2/3/4)         TRUNK

  PACKET SWITCHING                      X.75'/X.75 TRUNK ONLY
47. OCU LOOPBACK _    54. LINK ID               ___    61. HIGH PVC LCN     ___
48. CSU LOOPBACK _    55. SEND THRUPUT CLASS   9600   62. LCN HI TO LOW    _
49. LAPB ADDR    _    56. RCV THRUPUT CLASS    9600   63. LOW INCOMING LCN ___
50. WINDOW SIZE  _    57. SEND PKT SIZE        128    64. HI  INCOMING LCN ___
51. RETRANS N2   __   58. RCV PKT SIZE         128    65. LOW 2 WAY LCN    ___
52. ACK TIME T1  ___  59. SEND PKT WINDOW SIZE 2      66. HI  2 WAY LCN    ___
53. IDLE TIME T3 __   60. RCV PKT WINDOW SIZE  2      67. LOW OUTGOING LCN ___
                                                    68. HI  OUTGOING LCN ___
```

```
SCREEN 4 OF 5                    5ESS Switch
trunk                     OFFICE DATA ADMINISTRATION
(5204-1/2/3/4,5271-1/2/3/4)         TRUNK

              PACKET SWITCHING X.75'/X.75 UTILITY INDICATORS
69. CALL ID       _      74. CUG              _    79. TNIC INDICATOR   _
70. THRUPUT CLASS _      75. CUG OUTGOING     _    80. UTILITY MARKER   _
71. WND SZ        _      76. REVERSE CHARGE   _    81. UTILITY FLD SIZE _________
72. PACKET SIZE   _      77. ADDR MOD NOTIFY  _    82. NUI BEFORE       _
73. FAST SELECT   _      78. CLR NETWORK ID   _    83. NUI AFTER        _

              PACKET SWITCHING X.75' ONLY UTILITY INDICATORS

84. TARIFF UTILITY    _  87. RPOA UTILITY      _   90. CLEAR SUB NET ID _
85. TRANSIT DELAY IND _  88. ACCESS CHAR       _   91. PROTOCOL CONV    _
86. TRANSIT DELAY SEL _  89. TRANS SUB NET CNT _   92. X75 ID UTILITY   _
```

```
SCREEN 5 OF 5                    5ESS Switch            _
trunk                     OFFICE DATA ADMINISTRATION
(5204-1/2/3/4,5271-1/2/3/4)         TRUNK

              PACKET SWITCHING X.75 ONLY UTILITY INDICATORS
93. TDI BEFORE    _    99. IN RPOA BEFORE  _   105. TNIC CONFIG  _______
94. TDI AFTER     _   100. IN RPOA AFTER   _   106. X75 ID       ____________
```

Copyright © 2006 Lucent Technologies

```
95. TDS BEFORE    _   101. OUT RPOA BEFORE _   107. IC PRESELECT _
96. TDS AFTER     _   102. OUT RPOA AFTER  _
97. TARIFF BEFORE _   103. RPOA DEL SEND   _
98. TARIFF AFTER  _   104. RPOA DEL RCV    _

MISCELLANEOUS
108. MF LOSS 0
```

Figure 7 DISPLAY OF TRUNK FORM IN de COMMAND 5E8 SOFTWARE RELEASE

SAMPLE OUTPUT FROM A "summary" COMMAND

FORM TYPE	NUMBER OF FORMS	NUMBER WITH ERRORS	NUMBER WITH WARNINGS
line	1490	20	10
fixrt	29	0	0
lcc	22	7	0
trunk	120	0	15
eqtup	1	0	0

Figure 8 SAMPLE OUTPUT FROM A summary COMMAND

EXAMPLES OF FORMS ASSOCIATED WITH THE USER GROUPS

The following is a list of form types by user group. This grouping of form names, "lines", "trunks" and "weco", is defined during office registration and is dependent upon the particular ODA release and/or the specific requirements of a particular office. To receive the current list of form types, execute the "helpenv forms" command (see Section 4.1 , "The HELPENV Command").

USER GROUP	EXAMPLES OF ASSOCIATED FORMS						
lines	iminfo	line	mlhg	mlhln	octa	slcca	
trunks	amact	auto	cgasp	cgidx	cnchg	conv	das
	fixrt	iddd	indit	lcc	ldit	mreg	noc
	ofcopt	pdit	rar	rate	rotl	rtidx	tkgrp
	tlws	tntyp	trfsep	trkcl	trunk		
weco	eqcore	eqds	eqdpn	eqdsp	eqdu	eqdup	
	eqim	eqlu	eqlup	eqmsp	eqmsu	eqncref	eqpc
	eqtu	eqtup					

Figure 9 EXAMPLES OF FORMS ASSOCIATED WITH USER GROUPS

EXAMPLES OF RECORD TYPE BY USER GROUP

The following is a list of office record numbers by user group. This grouping of office records into "lines", "trunks", "weco" and "brcs" is defined during office registration and is dependent upon the particular ODA release and/or the specific requirements of a particular office. To receive a current listing of these groups, execute the "helpenv records" command (see Section 4.1 "The HELPENV Command").

USER GROUP	EXAMPLES OF ASSOCIATED RECORDS							
lines	5104	5106	5107	5108	5109	5109-1		
	5109-2	5109-3	5110-1	5110-2	5110-3	5111-1	5111-2	
	5113	5114	5115	5115-A	5171-1a	lcclen		
trunks	5202-1	5202-2	5202-3	5202-4	5203	5204-1		
	5204-2	5209	5271-1	5271-2	5271-3	5300-1	5300-2	
	5300-3	5300-4	5300-5	5301	5301-1	5302-1		
	5302-2	5302-3	5303	5306	5307	5308		
	5501	5505-1	5505-2	5507	5509	5510	5511	5517
weco	5700-1	5700-2	5701	5702	5703	5705		
	5710	5720	5730	5740	5750	5810		
	5811	5820	5821	5840	5840-1	5840-A	5841	

Copyright © 2006 Lucent Technologies

	5842	5843						
brcs	5117	5608-1A	5617-3	5629-3	5600	5608-1B	5617-4	5629-4
	5601	5608-2	5618-1A	5713-1	5601-1	5608-3	5618-1B	5713-2

* 5100 produces an office record of just the telephone numbers that have been assigned for that office. It must be requested specifically, i.e., it is not included in the group defined as "lines", (e.g., records 5100).

Figure 10 EXAMPLES OF RECORD TYPES BY USER GROUP

Copyright © 2006 Lucent Technologies

SEC. 8: 5001,5002,5003,5004 ESTABLISH OFFICE DATABASES FOR INITIAL, GROWTH, RETROFIT, AND LARGE TERMINAL GROWTH OFFICES

1. GENERAL

Identification, accounting, and tracking information is needed to set up a database in a computer for each new 5ESS office. The 5001, 5002, 5003, and 5004 Forms are furnished to standardize the presentation of this information.

Send one copy of the appropriate completed 5001, 5002, 5003, or 5004 Form to the address shown on the form one month prior to the date upon which it is intended to insert data into the database which will be established.

Billing is directly dependent on the job type of the office, and it is therefore very important that the correct form indicating the job type is sent to NSC. Read the definitions of each job type carefully prior to completing the form.

2. COMMON LETTER ENTRIES

2.1 Date

The date that the letter is mailed is to be inserted into the space available in the letter.

2.2 Order Number

The Order Number is to be inserted into the space available in the letter. This Order Number is to conform to the instructions found in CI 42.177-21. The Order Number for EACH job type MUST BE unique.

2.3 Base and Control

The Base and Control Number for the office from the Equipment Specification is to be inserted into the space available in the letter. This Base and Control Number is to conform to the instructions found in CI 97.100, Section 18.

2.4 Office Name

The Office Name established by the customer for this 5ESS Switch is to be inserted into the second space available in the letter along with the state in which the office is located.

2.5 Number Of Lines

Enter the number of lines associated with the office, into the space available in the letter. Please note that this count should reflect the totals expected upon job completion, regardless of job type.

2.6 Number Of Trunks

Enter the number of trunks associated with the office, into the space available in the letter. Please note that this count should reflect the totals expected upon job completion, regardless of job type.

2.7 Number Of SMs

Copyright © 2006 Lucent Technologies

Enter the number of SMs (Switching Modules), associated with the office, into the space available in the letter. Please note that this count should reflect the totals expected upon job completion, regardless of job type.

2.8 Office Type

Indicate whether the office is a Local, Toll, or DSN (Defense Switched Network) office.

2.9 Software Release and Issue

Indicate the FINAL cutover Software Release into the space available in the letter.

2.10 Date Telephone Company Order Received

Indicate the date that the order was received in the region into the space available in the letter.

2.11 Responsible Engineer

Enter the name of the Systems Equipment Engineer responsible for the office database and its contents into the space available in the letter. The entry should be in the form of First Name, Middle Initial, Last Name.

2.12 Telephone Number

Enter the Telephone Number of the Systems Equipment Engineer responsible for the database and its contents into the space available in the letter. The entry should be in the form 630-224-7196.

2.13 Signature

The letter must be signed by the Department Chief to whom the engineer responsible for the database reports, or his/her designated representative.

2.14 Department

The final entry on the letter must be the Department Number of the organization having responsibility for the database. The entry should be in the form 11NW526160.

3. ENTRIES FOR INITIAL OFFICES (5001)

3.1 Definition

An Initial office is an installing 5ESS Switch, that is capable of processing phone calls and IS NOT an RSM (Remote Switching Module) associated with a Host office. An Initial office is considered to be a Host if RSMs associated with it are turning over on the same date.

3.2 Hardware Ship Date

Enter the date on which the hardware is to be shipped, into the space available in the letter. The entry should be in the form 07/10/84 or 07-10-84.

3.3 Current Turnover Date

Enter the date on which Network Systems is to turn the office over to the customer, into the space available in the letter. The entry should be in the form 07/10/84 or 07-10-84.

Copyright © 2006 Lucent Technologies

3.4 Non-Standard Dates

The Hardware Ship date and the Current Turnover date are the key dates which determine the software schedule in accordance with CI 97.100 Section 5, Part 5. If this office will NOT be following the standard schedule, indicate the schedule that the office WILL be following, in the space available under the Modified column in the letter.

3.5 Virgos Tape

Indicate whether or not a Virgos tape is to be expected at NSC, and the date that the tape should be expected if one is used, in the space available in the letter.

3.6 5ECONV Office

Indicate whether or not this office will be performing a conversion from 1A ESS Switch or 2B ESS Switch to 5ESS Switch. If the office is a conversion office, indicate the date that the tape(s) should be expected, in the space available in the letter.

3.7 Remote Switching Modules

If there are RSMs that are to be included in the Initial database, list the RSM Names, base and controls, and order numbers, and indicate whether a Virgos tape should be expected for each RSM. Please note that in order for the RSM to be included in the Initial office database, the turnover date of the RSM must match the turnover date of the Initial office.

4. ENTRIES FOR GROWTH OFFICES (5002)

4.1 Definition

A Growth office is an addition of hardware to an existing 5ESS Switch, OR a RSM that is associated with an Initial office, but has a turnover date later than that of the Host. Please note that if the turnover date of the RSM is the same as that of the Host, it is to be included in the Initial database.

4.2 Hardware Ship Date

Enter the date on which the hardware is to be shipped, into the space available in the letter. The entry should be in the form 07/10/84 or 07-10-84.

4.3 Current Turnover Date

Enter the date on which Network Systems is to turn the office over to the customer, into the space available in the letter. The entry should be in the form 07/10/84 or 07-10-84.

4.4 Non-Standard Dates

The Hardware Ship date and the Current Turnover date are the key dates which determine the software schedule in accordance with CI 97.100 Section 5, Part 5. If this office will NOT be following the standard schedule, indicate the schedule that the office WILL be following, in the space available under the Modified column in the letter.

4.5 Is This Office a Remote Switching Module?

Copyright © 2006 Lucent Technologies

Indicate whether or not this office is an RSM. If it is, identify the Host office name and base and control. If this office is NOT an RSM, ignore this question.

4.6 Virgos Tape

Indicate whether or not a Virgos tape is to be expected at NSC, and the date that the tape should be expected if one is used, in the space available in the letter.

5. ENTRIES FOR RETROFIT OFFICES (5003)

5.1 Definition

A Retrofit office is an existing 5ESS Switch that is upgrading from one Generic and ODA issue, to a greater Generic and ODA issue.

5.2 Retrofit Date

Indicate the onsite Retrofit Load Date in the space available in the letter. The entry should be in the form 07/10/84 or 07-10-84. The Retrofit Date is the only date needed to populate the remainder of the software schedule in the Production Scheduling System.

6. ENTRIES FOR LARGE TERMINAL GROWTH (LTG) OFFICES (5004)

6.1 Definition

A Large Terminal Growth office is an existing 5ESS Switch that is growing a large number of additional lines or trunks to be done through ODA, and then merged with the existing office dump, instead of through Recent Change. The Large Terminal Growth process requires that a Retrofit slot be obtained, and during the final interval, follows much the same schedule as a retrofit.

6.2 5ECONV Office

Indicate whether or not this office will be performing a conversion from 1A ESS Switch or 2B ESS Switch to 5ESS Switch. If the office is a conversion office, indicate the date that the tape(s) should be expected, in the space available in the letter.

6.3 Large Terminal Growth Date

Indicate the onsite Large Terminal Growth Date in the space available in the letter. The entry should be in the form 07/10/84 or 07-10-84. The Large Terminal Growth Date is the only date needed to populate the remainder of the software schedule in the Production Scheduling System.

5001(06) TG-5

DATE: _____

Network Systems
5ODA Software Database Management
2600 Warrenville Road - Room 33B1
Lisle, IL 60532
This letter authorizes the establishment of an account for order number ____and base and control _____, for the _____ INITIAL Office. There are ___ lines, ___ trunks, and ___ SMs associated with this office. This office is a _____ (Local, Toll, or DSN) office. The final cutover Software Release and Issue for this office will be _____. The Telco order number for this office was received on _____. The Engineer responsible for this job is _____ whose telephone number is _____.There (will/will not) be a Virgos tape for this office, and the tape will arrive at NSC on _____. This office (is/is not) a 5E Conversion office. Conversion tapes will arrive at NSC on _____.

Copyright © 2006 Lucent Technologies

The following RSMs are turning over with this Host office, and should be included in the Host database:

RSM Name	Base & Control	Order #, Virgos Tape(y or n)
Event Description	**Standard**	**Modified**
Registration Date		__/__/__
Office Initialization; Virgos Due		__/__/__
FITTS data entry start		__/__/__
FITTS freeze; Execute sendimst;		__/__/__
Trunk tape due		__/__/__
STR data entry start		__/__/__
STR data entry freeze		__/__/__
STR ship		__/__/__
STR due on site		__/__/__
FTR data entry start; Line tape due		__/__/__
FTR data entry freeze		__/__/__
FTR ship		__/__/__
FTR due on site;		__/__/__
MAIN HARDWARE SHIP DATE	__/__/__	__/__/__
TURNOVER DATE	__/__/__	__/__/__
Cutover Date		__/__/__

SEE Department Chief
Dept # _____

Figure 1 SAMPLE IN ITIAL LETTER

5001(06) TG-5

DATE: _____

Network Systems
5ODA Software Database Management
2600 Warrenville Road - Room 33B1
Lisle, IL 60532
This letter authorizes the establishment of an account for order number ____and base and control _____, for the _____ GROWTH Office. There are ___ lines, ___ trunks, and ___ SMs associated with this office. This office is a _____ (Local, Toll, or DSN) office. The final cutover Software Release and Issue for this office will be _____. The Telco order number for this office was received on _____. The Engineer responsible for this job is _____ whose telephone number is _____. Conversion office. Conversion tapes will arrive at NSC on _____.
There (will/will not) be a Virgos tape for this office, and the tape will arrive at NSC on _____.
The Host office name is _____, and the Host base control is _____.

Event Description	Standard	Modified
Registration Date		__/__/__
Office Initialization; Virgos Due		__/__/__
FITTS data entry start		__/__/__
FITTS freeze; Execute sendimst;		__/__/__
MAIN HARDWARE SHIP DATE	__/__/__	__/__/__
TURNOVER DATE	__/__/__	__/__/__
Cutover Date		__/__/__

SEE Department Chief
Dept # _____

Figure 2 SAMPLE GROWTH LETTER

5001(06) TG-5

DATE: _____

Network Systems
5ODA Software Database Management
2600 Warrenville Road - Room 33B1
Lisle, IL 60532
This letter authorizes the establishment of an account for order number ____and base and control _____, for the _____ RETROFIT Office. There are ___ lines, ___ trunks, and ___ SMs associated with this office. This office is a _____ (Local, Toll, or DSN) office. The final cutover Software Release and Issue for this office will be _____. The Telco order number for this office was received on _____. The Engineer responsible for this job is _____ whose telephone number is _____.
The onsite Retrofit date for this office is _____.

Copyright © 2006 Lucent Technologies

SEE Department Chief
Dept # _____

Figure 3 SAMPLE RETROFIT LETTER

5001(06) TG-5

DATE: _____

Network Systems
5ODA Software Database Management
2600 Warrenville Road - Room 33B1
Lisle, IL 60532

This letter authorizes the establishment of an account for order number ____and base and control _____, for the _____ LARGE TERMINAL GROWTH Office. There are ___ lines, ___ trunks, and ___ SMs associated with this office. This office is a _____ (Local, Toll, or DSN) office. The final cutover Software Release and Issue for this office will be _____. The Telco order number for this office was received on _____. The Engineer responsible for this job is _____ whose telephone number is _____. The onsite Large Terminal Growth date for this office is _____. This office (is/is not) a 5E Conversion office. Conversion tapes will arrive at NSC on _____.

SEE Department Chief
Dept # _____

Figure 4 SAMPLE LARGE TERMINAL GROWTH LETTER

Copyright © 2006 Lucent Technologies

SEC. 9: 5ODA BATCH LOAD INTERFACE

1. GENERAL

To accommodate data supplied from existing mechanized systems (e.g. equipment, line or trunk data), the ODA 5ODA provides an interface to merge batch data with the appropriate ODA 5ODA database. The magnetic tape containing batch data must be self-defined, meaning, there is information on the tape which defines the contents of the data records. This allows the customer to add, delete or change a field, when they wish, without coordinating the change with Lucent Technologies, requiring them to only change the tape definition.

2. TAPE FORMAT

The ODA system will process magnetic tapes that meet the following requirements:

1. The tape must be 1600 bpi. The format must be ASCII and produced on 9-track drives only.
2. The magnetic tape itself may be a labeled (e.g. IBM Standard Label) or a non-labeled tape. However, every tape should be marked with a paper label identifying which file is the ODA data file on the tape. If there is no such indicator on the tape, the ODA assumes the data as the first file. The end of a file on a tape is indicated by a tape mark. The ODA system will only process the ODA data file.
3. If one tape volume cannot hold all the data the user wants to send to the ODA, then the user can send multiple tapes. The ODA input tapes do not have to be processed in the same order in which they were produced. This procedure should not cause any problems provided the user never splits a "logical record" (see section on Basic Definitions) over two tapes and each tape begins with a header record and ends with a trailer record (see section on Header and Trailer forms). If the tapes should be processed in a sequential manner they must be marked as such on the tape labels.

3. FILE FORMAT

3.1 Physical Format

The block size of data on the tape should be no more than 2048 bytes. All blocks must be the same size except the last block with can be less than 2048 bytes.

3.2 Logical Format-basic Definitions

The 50DA system interprets the data on the tape as a stream of characters. The characters are grouped into name-value pairs. Each name must be terminated by a colon (i.e. :). Each name-value pair must be terminated by a semi-colon (i.e.:). Leading and trailing blanks around the name and the value will be ignored. Any blanks within a value (e.g. "his name is Joe") will be kept. Therefore, the stream of data could look as follows:

DN: 1234567 ; TTC : Y ; CFW : N;

Name-value pairs are grouped together into logical records. In order to identify the beginning of a logical record (and thus the end of the previous logical record), and to know what type of record it is, the 5ODA selected "FORM NAME" as the logical record initiator name of a name-value pair. The name "FORMNAME'S" associated value identifies the record type. The above example could be preceded by the following name-value pair:

Copyright © 2006 Lucent Technologies

FORMNAME: Line;

The definition of each Directory Number would begin with the above name-value pair.

3.3 Logical Format-Structure Definitions

A form may use the same name more than once. This will normally happen within a structure definition (e.g., DATE1 AND DATE2 are structures each containing fields month, day and year). In order to distinguish between them, a fully qualified name must be specified. The qualified name would be composed of structure name, "DOT", element name (e.g., DATE1 .DAY). A form's definition will identify when and where a qualified name is necessary.

3.4 Header and Trailer Forms

Forms can be intermixed. A LINE form may be followed by a MLHG form, which in turn is followed by another LINE form. However, the first form on any tape must be the header form. The header form contains office identification information. The definition of the header form is the first page of the attachment to this memorandum. The last form on every tape must be the trailer form. This form has a count of each form passed since the last header form.

Most information on the header record is self-explanatory. The SENDERS field is unique to each system sending batch data to the ODA system. The sender is free to select any eight character name desired that will identify the system sending the data. However, once selected it should never be changed. The SENDER_ISSUE is meant for the senders use. If the ODA has any problems processing the batch data, then the ODA production personnel will contact the sender and let the sender know which issue of the system is causing the problem. We recommend the sender change this value every time a change is made to that system. The BATCH_ISSUE field will change each time the definition memorandum is re-issued. If the sender modifies their system to match the new definition, then they should specify the new BATCH_ISSUE value. The BATCH_ISSUE identifies, to the ODA, what type of data it is to expect.

3.5 Multiple Offices

The administration and generation of ODD (Office Dependant Data) for 5ESS Switch offices requires multiple hardware configurations. Therefore, more than one set of office data per tape is not permitted. Each individual tape must contain data for one office only to expedite the ODA process.

4. DEFINITIONS

The TG-5 (5ESS Switch Translation Guide) defines all the valid ODA form names. Since the form's field names described in the TG-5 may change for aesthetic reasons, it is necessary to establish field names that change less often. A composite listing is available containing these valid attribute names and cross reference for form names. In addition, the TG-5 contains "name" valid values. Refer to *INQUIRIES* in this section for information regarding the procedure to obtain the attribute names and cross reference lists for form names.

Each logical form definition appears on a separate page (some forms such as the LINE form need multiple pages). As stated earlier, the first two pages define the HEADER and the TRAILER forms. The rest of the pages define ODA input forms. At the top of each page is the name of the form defined on that page. Beside the name is the list of 5ESS Switch Software Release issues supported by this form. After the form name is the list of attribute names that make up this form. Beside the attribute name is a brief description of what the field is. The attribute is applicable to all the previously indicated Software Release issues unless another list of Software Release issues appears on a line after the attribute name. In this case, the attribute is only applicable to the Software Release issues specified. If the ODA receives an attribute that is not applicable to the Software

Copyright © 2006 Lucent Technologies

Release currently being installed in the office, then the ODA just ignores that attribute. This allows the user to generate an output that is suitable for any number of different Software Releases.

5. LIST DEFINITIONS

Some of the 5ESS Switch input forms contain lists. Informally, a list is a shorthand way to define a repeating group of attributes (i.e. 5ESS Switch Translations Guide TG-5 Volume 1: LINEFA form). However, for batch loading purposes, data must be sent corresponding to form definitions that do not contain lists. To batch populate a form that contains a list the corresponding form definitions in this document must be used. These forms basically contain the key fields, non-key fields, and one instance of the list fields (i.e. LINEFA form in this document). Multiple instances of these forms with key and non-key fields repeated should be generated for each set of list fields. The non-list forms will be combined per unique key into one form when the data is loaded into the database.

6. INQUIRIES

All inquiries or requests for information referred to in this section should be sent to the following:

5ESS Software Database Manager

Lucent Technologies

2600 Warrenville Road

Lisle, Illinois 60532

Copyright © 2006 Lucent Technologies

SEC. 10: ROUTING AND CHARGING

1. GENERAL

The purpose of Routing and Charging is to determine, based on source and destination information, how a call should be routed and charged.

This is normally accomplished in two steps. The first is called screening and the second is routing.

The purpose of screening is to translate the Prefix Index, Screening Index, and Code Index into Routing and Charging Indices. The purpose of routing is to derive the expanded routing data from the database using the Route Index obtained from screening. Figure 1 provides a block diagram of the flow of Routing and Charging Translations.

2. DEFINITIONS OF TERMS

Listed below are abbreviated definitions for each of the components of routing and charging.

2.1 DIGIT ANALYSIS SELECTOR

DAS (Digit Analysis Selector) is a general purpose table that is used to specify the set of tables (Local Digit Interpreter, Incoming Trunk Digit Interpreter and Preliminary Digit Interpreter) that are to be used for digit analysis.

2.2 LOCAL DIGIT INTERPRETER TABLE

LDIT (Local Digit Interpreter Table) is a table that is used to define all dialable codes (NPA, NXX, NPANXX, X11) in a 5ESS Switch office.

2.3 INCOMING DIGIT INTERPRETER TABLE

INDIT (Incoming Digit Interpreter Table) is a table that is used for incoming, two-way, or tandem Trunk Group routing.

2.4 PREFIX\/FEATURE DIGIT INTERPRETER TABLE

PDIT (Prefix/Feature Digit Interpreter Table) is a table that is used to define operator codes (0- and 010) and standard feature codes (72, 73, 2-9, 20-49, etc.).

2.5 CODE INDEX

Code Index is an output from the LDIT, INC DIT, IDDD, or PDIT that is used as an input to the Rate and Route Tables.

2.6 SCREENING INDEX

Screening index is an output from a Line Class Code or a Trunk Group that is used as an input to the Rate and Route Tables.

2.7 ROUTE INDEX

Route Index is an output from the Rate and Route Tables or a Telephone Number that defines the routing, (i.e., Trunk Group Number, digits to be deleted or prefixed, etc.) of a call.

Copyright © 2006 Lucent Technologies

2.8 CHARGE INDEX

Charge index is an output from the Rate and Route Tables that defines the charging, (i.e., MBI (Message Billing Index), time, charge, etc.) of a call.

3. RATE AND ROUTE TABLE

The Screening Index and Code Index form a matrix known as a Rate and Route Table. The Rate and Route Table provides a Charge Index and a Route Index based on the prefix dialed (no prefix, 1+, or 0+).

4. CODE CONFLICT

When NPA (Numbering Plan Area) codes and Central Office codes are the same, the routing and charging is resolved by one of two methods.

- Conflict resolved by timing
  - Using this method, the 5ESS Switch will time after receiving seven digits to determine if the call attempt is a seven or ten digit call.
- Conflict resolved by prefixing
  - Using this method, the 5ESS Switch will treat 1+ calls as ten digit attempts and no prefix calls as seven digit attempts. 0+ calls are resolved by the timing method.

5. CODE CONVERSION

Any three digit code may be converted to a seven or ten digit Telephone Number through code conversion. Code conversion is primarily used for X11 (411, 611, etc.) services. However, any three digit code may be converted if it is defined with an appropriate Call Type (i.e., LOCDA, REPAIR, BUSOFC, or EMER).

Copyright © 2006 Lucent Technologies

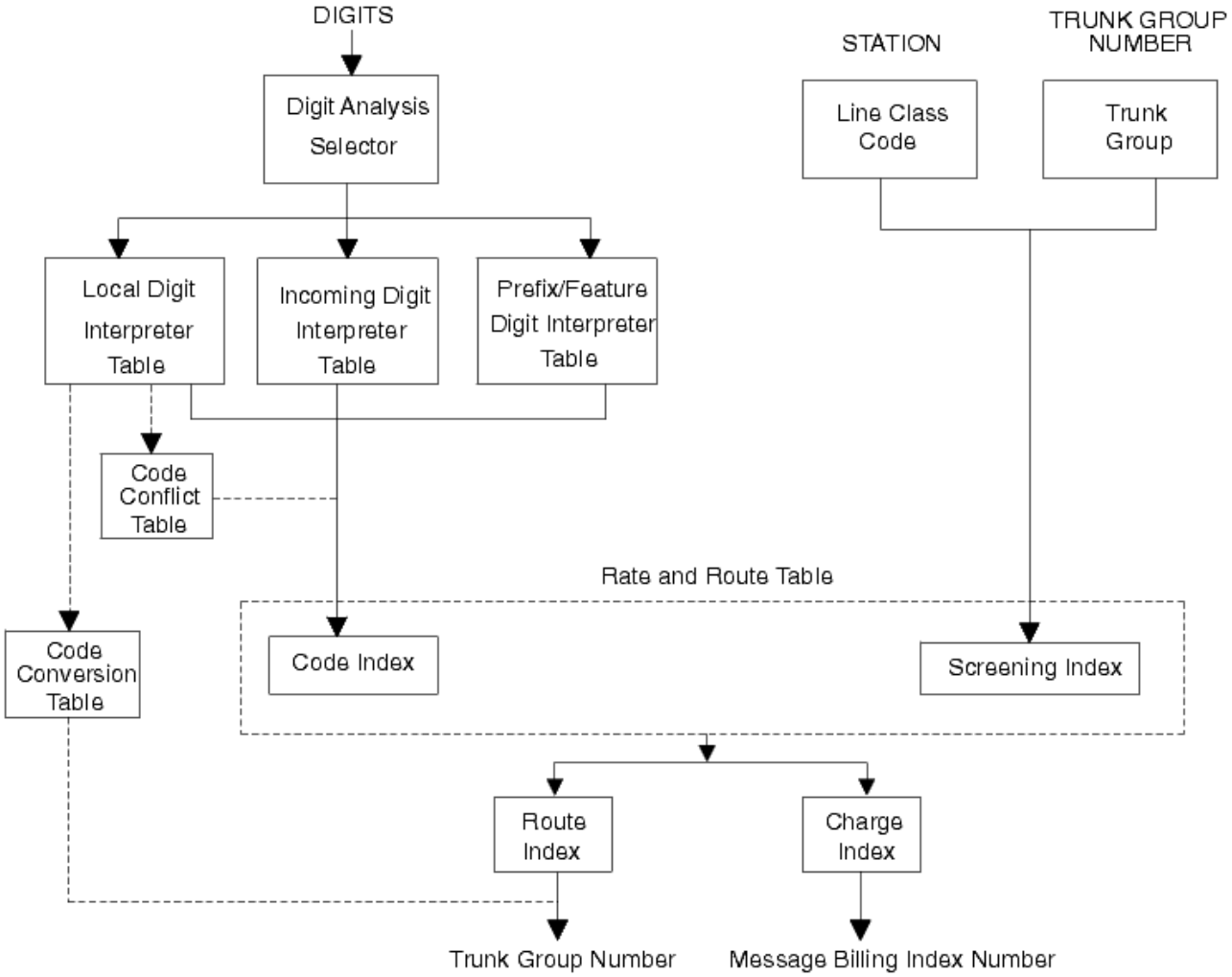

Figure 1 BLOCK DIAGRAM - ROUTING AND CHARGING

Copyright © 2006 Lucent Technologies

SEC. 11: LDMAP SYSTEM DESCRIPTION

1. GENERAL DESCRIPTION

The 1/1A ESS Switch to 5ESS Switch LDMAP (Line Data Mapping) System will extract line related data from a dump of the 1/1A ESS Switch Translations and will map the line data into a format that will be used as input to the 5ODA process. An LDMAP questionnaire is completed by the switch owner is used to define how the Line Data Mapping is to be performed.

The output of the LDMAP system may be used for either the Initial 5ODA process or the LTG (Large Terminal Growth) process.

The LDMAP system provides the following capabilities for the mapping of line data from the 1/1A ESS Switch to a 5ESS Switch.

1. Feature Mapping
2. Feature Substitution
3. Feature Addition
4. Feature Clustering
5. Selection BFG Name Addition
6. Customized IDP Group Names
7. Terminal Group Station Restriction Feature Assignment
8. Multi-Line Hunt Group Renumbering
9. Call Pickup Group Renumbering
10. Partial Office Mapping
11. CAT Code to DPAT Code Mapping for IDP Lines
12. Group Speed Call Listname Mapping
13. Operator Intercept Line Mapping
14. Route Index Line Mapping
15. CENTREX Intercept TN Mapping
16. LINE/MLHLN form Updates

Details for each of the LDMAP capabilities are described later.

The LDMAP system does not do the following:

1. Assignment of 5ESS Switch Line Equipment Numbers
2. Assignment of 5ESS Switch Scan Points

Copyright © 2006 Lucent Technologies

3. Completion of Equipment, Trunking, Routing and Charging Forms
4. Completion of Feature Definition Forms
5. Completion of Group Definition and Group Dialing Forms

2. FEATURE MAPPING

The LDMAP system uses the 1/1A ESS Switch features that are indicated on the 1107 form to map 1/1A ESS Switch features to 5ESS Switch preconstructed features. Supporting information from the 1109 form is used for the mapping of features on lines that belong to CENTREX Groups.

Refer to Figure 1 for details on how and what features are mapped by the LDMAP system.

If a feature indicated on the 1107 form cannot be mapped to a 5ESS Switch preconstructed feature then the telephone number or Multi-Line Hunt Group and member number along with the 1/1A ESS Switch feature acronym is written to the NO5E report.

Refer to Figure 2 for a list of features indicated on the 1107 TYPE 00 record that are not mapped by the LDMAP system.

Refer toFigure 3 for a list of features indicated on the 1107 form that are not mapped by the LDMAP system.

3. FEATURE SUBSTITUTION

The LDMAP system allows the switch owner to substitute features for the preconstructed features that are assigned by LDMAP.

The new feature may be either a constructed feature or another preconstructed feature. The switch owner is responsible for the completion of Feature Definition forms for any constructed feature that is used for feature substitution.

The feature substitution may be applied in one of the following three methods.

1. All lines in a specified IDP Group.
2. All POTS lines.
3. All lines in the office.

LDMAP will apply feature substitutions to specified IDP groups and POTS lines prior to applying feature substitutions to the entire office.

4. FEATURE ADDITION

The LDMAP system will allow the switch owner to add either preconstructed or constructed features to a specified group of lines. Examples of features added are ARS (Automatic Route Selection) or PFA (Private Facilities Access) features.

A feature may be added to the following:

1. All lines in a specified IDP Group.

Copyright © 2006 Lucent Technologies

2. Lines in a specified IDP Group which meet a DPAT Code requirement.
3. All POT lines.

The completion of Feature Definition Forms for constructed features being added is the responsibility of the switch owner.

The LDMAP system will only complete LINEFA and MLHLNFA forms for the features being added. Parameter forms are not completed by LDMAP for features being added.

5. FEATURE CLUSTERING

The LDMAP system allows the switch owner to specify clusters that are to be assigned to the lines. The switch owner specifies the cluster name, the features in the cluster and how the cluster is to be applied to the lines.

The cluster may be applied in one of the following three ways:

1. The cluster is applied to a specified IDP Group.
2. The cluster is applied to POT lines.
3. The cluster is applied to the entire office.

The features in the cluster may be preconstructed features assigned by LDMAP, features assigned as a result of feature substitution or features added to the lines as a result of feature addition.

The completion of the cluster definition form (5600 Record) is the responsibility of the switch owner.

6. SELECTION BFG NAME ADDITION

The LDMAP system will allow for the addition of a Selection BFG (BRCS Feature Group) Name to be added to lines in a specified IDP Group. The switch owner will provide the Selection BFG Name that is to be added for each IDP Group. The LDMAP system will then place the Selection BFG Name on the LINEFA or MLHLNFA form for the line.

The completion of the BFG Construction Form (5625 Record) is the responsibility of the switch owner. The 5ODA process will assign the Selection BFG Suffix based on the BFG Construction Form that has been completed.

7. CUSTOMIZED IDP GROUP NAMES

The LDMAP system builds the IDP Group Names in two portions. The first portion of the IDP Group Name is a PREFIX. The second portion of the IDP Group Name is the NUMBER.

The switch owner may specify a PREFIX to be used for all IDP Group Names, a PREFIX for each IDP Group Name or that the IDP Group Name will not contain a PREFIX. The PREFIX may contain any quantity of alpha-numeric characters.

The LDMAP system default is to set the NUMBER portion of the IDP Group Name to a 4-digit number that is the 1/1A ESS Switch CENTREX Group Number.

Copyright © 2006 Lucent Technologies

The switch owner may select to renumber the 1/1A ESS Switch CENTREX Group number to derive the NUMBER portion of the IDP Group Name. Two renumbering methods are available for the renumbering of 1/1A ESS Switch CENTREX Group Numbers.

The first method is called sequential renumbering. Sequential renumbering takes a starting CENTREX Group number provided by the switch owner and will renumber the lowest numbered CENTREX Group in the 1/1A ESS Switch to that CENTREX Group number provided. The next lowest CENTREX Group number in the 1/1A ESS Switch will be renumbered to the CENTREX Group number provided plus one. The sequential renumbering method will renumber all CENTREX Groups in the 1/1A ESS Switch.

The second method is for the renumbering of CENTREX Groups is to provide a mapping table. The mapping table will show each 1/1A ESS Switch CENTREX Group number that is to be renumbered with its 5ESS Switch CENTREX Group number. Only 1/1A ESS Switch CENTREX Group numbers that appear in the mapping table will be renumbered. If a 1/1A ESS Switch CENTREX Group number is not in the mapping table, then the CENTREX Group number will not be renumbered.

The switch owner must consider CENTREX Group renumbering if the 1/1A ESS Switch is being mapped to a already working 5ESS Switch or if more than one switch is being mapped to the 5ESS Switch.

The switch owner may also specify the quantity of digits that are to be used in the NUMBER portion of the IDP Group Name.

NOTE: The IDP Group Name may be only 8 characters in length.

The IDP Group Name must be shown on a IDP Group Definition Form (5601-4) which has been completed by the switch owner.

8. TERMINAL GROUP STATION RESTRICTION FEATURE ASSIGNMENT

The LDMAP system will assign a TGSR (Terminal Group Station Restriction) feature to each line in a 1/1A ESS Switch CENTREX group. The TGSR feature assigned is based on the OMAJ (Originating Major) Class and the TMAJ (Terminating Major) Class of the line. The following table shows the TGSR feature that will be assigned based on the OMAJ and TMAJ of the line.

OMAJ	TMAJ	FEATURE
16	16	/TGFFx
16	30	/TGFSx
16	18	/TGFUx
17	16	/TGSFx
17	30	/TGSSx
17	18	/TGSUx
18	16	/TGUFx
18	17	/TGUSx
18	18	/TGUUx

If the line has a OMAJ and TMAJ combination that is not in the above table, then a TGSR feature is not assigned to the line and the TN or MLHG and Member Number is written to the NOTGSR Report.

The "x" at the end of the TGSR feature name is replaced by a "T" or an "A" depending on if the TGSR Feature is to be a TONE or ANNOUNCEMENT feature.

The TGSR Feature Type, Tone or Announcement, may be specified to be the same for all 1/1A ESS Switch CENTREX Groups or may be specified for each CENTREX Group individually.

If the ANNOUNCEMENT feature type is specified, then a 5ESS Switch Route Index for the Originating Error Announcement and a 5ESS Switch Route Index for the Terminating Error Announcement must be specified.

Copyright © 2006 Lucent Technologies

The LDMAP system will assign the Terminal Group ID depending on the method selected. The three methods for assigning the Terminal Group ID are

1. The Terminal Group ID will equal the NUMBER portion of the IDP Group Name.
2. The Terminal Group ID will equal the 1/1A ESS Switch CENTREX Group Number.
3. The Terminal Group ID will be determined from a mapping table of 1/1A ESS Switch CENTREX Group Numbers to Terminal Group IDs. If the 1/1A ESS Switch CENTREX Group Number is not in the mapping table, then the 1/1A ESS Switch CENTREX Group Number will be used as the Terminal Group ID.

9. MULTI-LINE HUNT GROUP RENUMBERING

The LDMAP system will set the 5ESS Switch MLHG (Multi-Line Hunt Group) number to be equal to the 1/1A ESS Switch MLHG number, unless a MLHG Renumbering Method is selected.

If the renumbering of MLHGs is desired, then two methods for renumbering of MLHGs are provided by LDMAP.

The first method is called sequential renumbering. Sequential renumbering takes a starting MLHG number provided by the switch owner and will renumber the lowest numbered MLHG in the 1/1A ESS Switch to that MLHG number provided. The next lowest MLHG number in the 1/1A ESS Switch will be renumbered to the MLHG number provided plus one. The sequential renumbering method will renumber all MLHGs in the 1/1A ESS Switch.

The second method is for the renumbering of MLHGs is to provide a mapping table. The mapping table will show each 1/1A ESS Switch MLHG number that is to be renumbered with its 5ESS Switch MLHG number. Only 1/1A ESS Switch MLHG numbers that appear in the mapping table will be renumbered. If a 1/1A ESS Switch MLHG number is not in the mapping table, then the MLHG number will not be renumbered in the mapping of the MLHG from the 1/1A ESS Switch to the 5ESS Switch.

The switch owner must consider MLHG renumbering if the 1/1A ESS Switch is being mapped to a already working 5ESS Switch which has MLHGs or if more than one switch is being mapped to the 5ESS Switch.

10. CALL PICKUP GROUP RENUMBERING

The LDMAP system will set the 5ESS Switch CPUG (Call Pickup Group) number to be equal to the 1/1A ESS Switch CPUG number unless a renumbering of CPUG numbers is selected.

If the renumbering of CPUGs is desired, then two methods for renumbering of CPUGs are provided by LDMAP.

The first method is called sequential renumbering. Sequential renumbering takes a starting CPUG number provided by the switch owner and will renumber the lowest numbered CPUG in the 1/1A ESS Switch to that CPUG number provided. The next lowest CPUG number in the 1/1A ESS Switch will be renumbered to the CPUG number provided plus one. The sequential renumbering method will renumber all CPUGs in the 1/1A ESS Switch.

1/1A ESS Switch CPUG number that is to be renumbered with its 5ESS Switch CPUG number. Only 1/1A ESS Switch CPUG numbers that appear in the mapping table will be renumbered. If a 1/1A ESS Switch CPUG number is not in the mapping table then the CPUG number will not be renumbered in the mapping of

Copyright © 2006 Lucent Technologies

the CPUG from the 1/1A ESS Switch to the 5ESS Switch.

The switch owner must consider the renumbering of CPUGs if the 1/1A ESS Switch is being mapped into an already working 5ESS Switch or if more than one switch is being mapped into the 5ESS Switch.

- ***NOTE:*** If Call Pickup Group 1 exists in the 1/1A ESS Switch, then Call Pickup Group 1 must be renumbered.

11. PARTIAL OFFICE MAPPING

An office is classified as a Partial Office if only a portion of the TNs (Telephone Numbers) in the 1/1A ESS Switch are to be mapped to the 5ESS Switch.

The switch owner will provide the TN ranges that are to be mapped from the 1/1A ESS Switch to the 5ESS Switch. The LDMAP system will then extract the lines in the TN ranges provided and map only this set of lines to the 5ESS Switch.

MLHGs (Multi-Line Hunt Groups) in a Partial Office are mapped based on the LDN (Listed Directory Number) of the MLHG. If the LDN of the MLHG is in the TN ranges to be mapped, then all terminals in MLHG will be mapped to the 5ESS Switch. If the LDN is not in the TN ranges to be mapped, then the terminals in the MLHG are not mapped to the 5ESS Switch.

Two error reports are produced when extracting the TNs to be mapped. Both error reports are related to the mapping of MLHGs.

The first error report will indicate MLHG Terminals that have a Hunt TN or Nonhunt TN that is not in the TN ranges to be mapped but the Listed Directory Number is in the TN ranges to be mapped.

The second error report will indicate MLHG Terminals that have a HUNT TN or Nonhunt TN that is in the TN ranges being mapped but the Listed Directory Number is not in the TN ranges being mapped.

12. CAT CODE to DPAT CODE MAPPING

The LDMAP system will map the CAT (CENTREX Access Treatment) code associated with a CENTREX line in the 1/1A ESS Switch to a DPAT (Dialing Plan Access Treatment) code in the 5ESS Switch.

The LDMAP system uses the following default CAT Code to DPAT Code mapping table.

CAT Code	DPAT Code
0	8
1	1
2	2
3	3
4	4
5	5
6	6
7	7

The switch owner must specify a CAT Code to DPAT Code mapping table if the default mapping table is not desired.

13. GROUP SPEED CALL LISTNAME MAPPING

The LDMAP system will assign the first TN to access a 1/1A ESS Switch CENTREX Group Speed Call List as the 5ESS Switch Speed Call Listname for the Group Speed Call List.

Copyright © 2006 Lucent Technologies

The LDMAP system allows the switch owner to change the LDMAP assigned Listname for the Group Speed Call List by associating a new listname to the LDMAP assigned listname.

14. OPERATOR INTERCEPT LINE MAPPING

The LDMAP system has the option to map TNs (Telephone Numbers) in the 1/1A ESS Switch that terminate to Route Index 0084 to 5ODA line forms. These TNs are referred to as Operator Intercept lines.

Operator Intercept lines can be mapped to line forms in one of two methods.

1. The switch owner provides a 5ESS Switch Route Index for the Operator Intercept lines that will complete the RTI field of the line form.

2. The switch owner selects to use Regular Intercept for the Operator Intercept lines which will set the ICP field of the LINE form to "Y".

The switch owner must also provide a 5ESS Switch LCC (Line Class Code) for Operator Intercept lines so that the line form may be completed correctly.

15. ROUTE INDEX LINE MAPPING

The LDMAP system can map TNs in the 1/1A ESS Switch that terminate to a Route Index greater than 0199. These TNs are generally used for DID lines and are called Route Index Lines. The LDMAP system will map Route Index Lines to 5ODA LINE or HGRPAS forms.

The switch owner may specify that only line forms be used for the mapping of Route Index Lines. If this mapping option is chosen, then the LDMAP system will construct one 5ODA line form for each Route Index Line.

The other method available for the mapping of Route Index Lines is to use a combination of 5ODA LINE forms and HGRPAS forms.

If a hundreds group of TNs, the 5 leftmost digits of the TNs being the same, all terminate to the same route index then a HGRPAS form will be constructed for those 100 TNs. All other TNs will be mapped to a LINE form.

The 5EE Route Index may either equal the 1/1A ESS Switch Route Index or a mapping table for Route Indexes may be provided.

The mapping table will show the 1/1A ESS Switch Route Index and its equivalent 5ESS Switch Route Index. If a 1/1A ESS Switch Route Index does not appear in the Route Index mapping table, then the 5ESS Switch Route Index will equal the 1/1A ESS Switch Route Index.

A 5ESS Switch Line Class Code is required to complete the LINE forms correctly.

The LDMAP system will process only TNs that terminate to Route Indexes greater than 0199. Route Index 0084 is the only other Route Index processed by LDMAP, refer to the Operator Intercept section for details on the processing of TNs terminating to Route Index 0084.

The switch owner is responsible for the construction of the Route Index Form (5303) for any Route Index used.

16. CENTREX INTERCEPT TN MAPPING

Copyright © 2006 Lucent Technologies

A CENTREX Intercept TN is defined as a TN in the 1/1A ESS Switch that does not have a LEN (Line Equipment Number) but is assigned to a 1/1A ESS Switch CENTREX Group.

The LDMAP system has an option to map CENTREX Intercept TNs to 5ODA LINE forms. The LDMAP system will create a LINE form for each CENTREX Intercept TN. The LINE form has the TN, RTI, and LCC fields completed.

The RTI field is completed with the Base Route Index (BRI) found in the 1/1A ESS Switch CENTREX Common Block or with a switch owner provided Route Index.

The switch owner specifies for each 1/1A ESS Switch CENTREX Group if the BRI is to be used or if a switch owner provided Route Index is to be provided. The switch owner also specifies the LCC to be used to complete the LCC field of the LINE form.

17. LINE/MLHLN FORM UPDATES

The LDMAP can optionally update fields of the LINE or MLHLN forms that have been previously submitted to the 5ODA database. The update data is taken from the 1/1A ESS Switch and owner supplied data.

The LINE and MLHLN fields that will be updated are the following:

1. PIC - Primary Interexchange Carrier
2. TTC - Touchtone Calling
3. ALT BILL TN - Alternate Billing TN
4. SERHLN - Series Complete TN
5. GST - Ground Start
6. EL - Essential Line Service
7. BRCS - Business and Residence Custom Services
8. PRIVACY - Per Line Privacy
9. LCC - Line Class Code
10. SUSO - Suspend Origination
11. SUST - Suspend Termination
12. TN - MLHG Terminal TN (MLHLN form only)
13. FGA - Feature Group A
14. SLUS - Subscriber Line Usage
15. ANI7 - Automatic Number Identification 7
16. TRC - Call Trace
17. PALIT - Prohibit ALIT

Copyright © 2006 Lucent Technologies

18. FLS - Free Number

The selection of the PIC field will also update the CIDIAL field.

The LCC field can be updated with either the LCC value recovered from the 1/1A ESS Switch or by a LCC mapping table provided by the switch owner.

The SUSO field will be set to "Y", if the Originating Major Class of the Line is equal to 03 or 07.

The SUST field will be set to "Y", if the Terminating Major Class of the Line is equal to 22 or 24.

The selection of the TN field will also update the NONHUNT field and complete a MULTITN form if the MLHG terminal has both a hunt and nonhunt TN.

The FGA field is updated based on the 1/1A ESS Switch Chart Column. The switch owner provides a list of Chart Columns that FGA is to be set to "Y". Lines that have a Chart Column in the list will have FGA set equal to "Y", otherwise FGA will be set to "N".

The SLUS field is updated based on the 1/1A ESS Switch Chart Column. The switch owner provides a list of Chart Columns that SLUS is to be set to "Y". Lines that have a Chart Column in the list will have SLUS set equal to "Y", otherwise SLUS will be set to "N".

The ANI7 field is updated based on the 1/1A ESS Switch Chart Column. The switch owner provides a list of Chart Columns that ANI7 is to be set to "Y". Lines that have a Chart Column in the list will have ANI7 set equal to "Y", otherwise ANI7 will be set to "N".

The above list of LINE and MLHLN form fields are the only fields updated by LDMAP. Additional LINE and MLHLN form fields can be updated by arrangement with the AT&T NSEC engineer.

18. LDMAP OUTPUT REPORTS

This section details the possible reports that are generated from the LDMAP system. The actual reports that are generated depends on the LDMAP options that were selected in the LDMAP questionnaire.

If a report is selected to be printed and the file that creates the report is empty or does not exist then the report will be printed with the phrase "Empty Report".

18.1 1/1A ESS SWITCH FORMS

The 1101, 1107, 1109, 1115 and the 1306 forms from the 1/1A ESS switch can be printed from LDMAP only if the Partial Office Step of LDMAP is run.

It is recommended that the 1/1A ESS Switch forms not be printed from LDMAP as a full set of forms is printed from the TDD system.

18.2 TN Report

This report gives the TN Ranges that were used for a Partial Office Conversion. Only TNs in these ranges were converted.

18.3 MLHG MAP

This report shows the mapping of the 1/1A ESS Switch Multi-Line Hunt Group Numbers to 5ESS Switch

Copyright © 2006 Lucent Technologies

Multi-Line Hunt Group Numbers.

18.4 CPU MAP

This report shows the mapping of the 1/1A ESS Switch Call Pickup Group Numbers to 5ESS Switch Call Pickup Group Numbers.

18.5 LCC MAP

This report shows the mapping of 1/1A ESS Switch LCC (Line Class Codes) to the 5ESS Switch Line Class Codes.

18.6 RI MAP

This report shows the mapping of 1/1A ESS Switch Route Indexes to 5ESS Switch Route Indexes.

18.7 DPAT MAP

This report shows the CAT Code to DPAT Mapping Table that was used by LDMAP.

18.8 IDP PREFIX

This report shows the PREFIX that was used for each 1/1A ESS Switch CENTREX Group to construct the IDP Group Name.

18.9 CTX MAP

This report shows the mapping of the 1/1A ESS Switch CENTREX Group Numbers to the NUMBER portion of the IDP Group Names.

18.10 TGSR MAP

This report shows the mapping of 1/1A ESS Switch CENTREX Group Numbers to 5ESS Switch Terminal Group IDs.

18.11 FT MAP

This report gives the FT (Feature Type) that was used for the the TGSR (Terminal Group Station Restriction) Feature assigned to each 1/1A ESS Switch CENTREX Group. The Feature Type is either Announcement (A) or Tone (T).

18.12 ORI MAP

This report gives the RI (Route Index) that was used for the the TGSR (Terminal Group Station Restriction) Feature Originating Error Announcement for each 1/1A ESS Switch CENTREX Group.

18.13 TRI MAP

This report gives the RI (Route Index) that was used for the the TGSR (Terminal Group Station Restriction) Feature Terminating Error Announcement for each 1/1A ESS Switch CENTREX Group.

18.14 BFG Addition

Copyright © 2006 Lucent Technologies

This report provides the input that was used to add a Selection BFG Name to lines in an IDP group.

18.15 Change Listname

This report shows the 5ESS Switch Speed Call Listname assigned by LDMAP for a 1/1A ESS Switch CENTREX Group Speed Call List and the Speed Call Listname that was substituted for the LDMAP assigned name.

18.16 Feature Addition

This report gives the input that was used for the Feature Addition Step of the LDMAP process.

18.17 Feature Substitution

This report shows the Feature Substitution data that was used for the office.

18.18 Feature Clustering

This report shows the Feature Clustering data that was used for the office.

18.19 LASS CSI

This report contains the 1A ESS Switch Chart Columns that are restricted from having a LASS Feature Assigned.

18.20 LASS ACRG

This report contains the LASS Features and the ACRG values that restrict the LASS Feature from access to the Usage Sensative version of the feature.

18.21 FGA

This report contains the list of 1/1A ESS Switch Chart Columns for which the FGA field on the LINE form will be set to "Y".

18.22 SLUS

This report contains the list of 1/1A ESS Switch Chart Columns for which the SLUS field on the LINE form will be set to "Y".

18.23 ANI7

This report contains the list of 1/1A ESS Switch Chart Columns for which the ANI7 field on the LINE form will be set to "Y".

18.24 CENTREX Intercept - Base Route Index

This report shows the Base Route Index and Line Class Code that was used for each 1/1A ESS Switch CENTREX Group to construct 5ODA LINE forms for CENTREX Intercept TNs.

18.25 Partial Office Error Report 1

This report gives MLHG MEMBERS that have a HUNT TN or NONHUNT TN that is not in the range of TNs to

Copyright © 2006 Lucent Technologies

be converted but the LDN (Listed Directory Number) of the MLHG is in range. The MLHG MEMBERS listed in this report are converted.

18.26 Partial Office Error Report 2

This report gives MLHG MEMBERS that have a HUNT TN or NONHUNT TN that is in the range of TNs to be converted but the Listed Directory Number of the MLHG is not in range. The MLHG MEMBERS listed in this report are not converted.

18.27 Error File

This report provides a listing of error messages that are generated by the Feature Conversion step of LDMAP.

18.28 NO5E

This report lists the TN or MLHG MEMBERS that have a 1/1A ESS Switch feature that can not be converted to a 5ESS Switch feature. The 1/1A ESS Switch features for this report comes from the 1107A form.

18.29 NOTGSR

This report gives TNs and MLHG MEMBERS that are in a 5ESS Switch Terminal Group but which no TGSR Feature has been assigned. The 1/1A ESS Switch OMAJ (Originating Major Class) and the TMAJ (Terminating Major Class) for the line is also given.

18.30 GSC No Owner

This report provides a list of 1/1A ESS Switch CENTREX Group Speed Call Lists that do not have an owner or a user of the Group Speed Call List. These 1/1A ESS Switch CENTREX Group Speed Call Lists will NOT be mapped to a 5ESS Switch Speed Call List.

18.31 GSC Listname

This report gives the Speed Call Listname that was assigned by LDMAP to the 1/1A ESS Switch CENTREX Group Speed Call Lists that are being mapped to 5ESS Switch Speed Call Lists.

18.32 GSC Changers

This report gives the 1/1A ESS Switch CENTREX Group Number, the Group Speed Call List Number and either the Telephone Number or Multiline Hunt Group Number and Terminal that have change capability to the Group Speed Call List. These TNs and MLHG Terminals have been assigned a 5ESS Switch Speed Call Feature with change capability for a 2-Digit Speed Call List.

18.33 GSC Users

This report gives the 1/1A ESS Switch CENTREX Group Number, the Group Speed Call List Number and either a Telephone Number or Multiline Hunt Group and Terminal Number that have access to the Group Speed Cca List but do not have change capability to the Group Speed Call List. These TNs or MLHG Terminals have been assigned a 5ESS Switch Speed Calll Feature without change capability for a 2-Digit Speed Call List.

18.34 TN_CLUS

Copyright © 2006 Lucent Technologies

This report gives the TNs that have had a cluster assigned. The TN is followed by the name of the cluster that was assigned. If more than one cluster has been assigned to a TN, the TN will appear in the report once for each cluster assigned.

18.35 MLHG_CLUS

This report gives the MLHG MEMBERS that have had a cluster assigned. The MLHG number and MEMBER number are followed by the name of the cluster that was assigned. If more than one cluster has been assigned to a MLHG MEMBER, the MLHG MEMBER will appear in the report once for each cluster assigned.

18.36 Feature Summary Report

This report provides a count of lines with unique sets of features for each IDP Group in the office. Lines not in an IDP Group are grouped together under the Group Name "POT". Features that have the character "%" prefixed to the feature name are features that have been included in a cluster. These features will not appear on a LINEFA or MLHLNFA form.

18.37 Feature Map Report

This report provides the mapping of features that was used for this office. The feature mapping is given for each IDP group and for POT lines.

18.38 UPDATE

This report gives the Batch Interface records that were submitted to the 5ODA to update LINE and MLHLN forms.

18.39 NEWFORMS

This report gives the Batch Interface records that were submitted to the 5ODA to add new forms to the 5ODA database.

Automatic Call Back
1107 Form:

Type 00 record, weighted value of 1 in column 60
1109 Form:

None
5ESS Switch Feature:

/ACBC
Parameter Forms Completed:

None
Call Wait - Terminating
1107 Form:

Type 00 record, weighted value of 2 in column 50
1109 Form:

CWI (Call Wait Intragroup) indicated by a weighted value of 2 in column 52 of Descriptive Line.
5ESS Switch Feature:

/CWT - POTS lines

/CWT - CENTREX lines with CWI

/CWIO - CENTREX Lines without CWI
Parameter Forms Completed:

None
Call Wait - Originating
1107 Form:

Type 00 record, weighted value of 2 in column 49
1109 Form:

None
5ESS Switch Feature:

/CWO
Parameter Forms Completed:

None
Dialed Call Waiting
1107 Form:

Type 00 record, weighted value of 1 in column 56
1109 Form:

None
5ESS Switch Feature:

/CWD
Parameter Forms Completed:

None
Call Forward - Variable
1107 Form:

Type 00 record, weighted value of 4 in column 51

Type 00 record, weighted value of 2 in column 60

Type 00 record, weighted value of 2 in column 72
1109 Form:

CFO (Call Forward Outside) indicated by a weighted value of 1 in column 54 of Descriptive Line.

RGR (Ring Reminder) indicated by a weighted value of 2 in column 50 of Descriptive Line.
5ESS Switch Feature:

/CFV1A - for POTS Lines

/CFV1A - for CENTREX Lines with CFO

/CFIAG - for CENTREX Lines without CFO
Parameter Forms Completed:

cfwlpa, cfwmpa
Call Forward - Don't Answer
1107 Form:

Type 38 record

Type 52 record

Type 1R record

CFUS (Call Forward Unrestricted Source) indicated in column 44 of the above record types.

Column 45 of the above record types is used to complete the TIMEOUT field.
1109 Form:

Type 02 records for determining the quantity of digits for the Forward To TN.
5ESS Switch Feature:

/CFDAAC - for POTS Lines

/CFDAAC - for CENTREX Lines with CFUS

/CFDAIO - for CENTREX Lines without CFUS
Parameter Forms Completed:

cfwlpa, cfwmpa
Call Forward - Busy Line
1107 Form:

Type 26 record

Type 51 record

Type 1R record

CFUS (Call Forward Unrestricted Source) indicated in column 44 of the above record types.
1109 Form:

Type 02 records for determining the quantity of digits for the Forward To TN.
5ESS Switch Feature:

/CFBLAC - for POTS Lines

/CFBLAC - for CENTREX Lines with CFUS

Copyright © 2006 Lucent Technologies

/CFBLIO - for CENTREX Lines without CFUS
Parameter Forms Completed:

cfwlpa, cfwmpa

Remote Call Forward
1107 Form:

Type 23 record
1109 Form:

None
5ESS Switch Feature:

/CFR
Parameter Forms Completed:

cfwlpa

Call Forward Night Service
1107 Form:

Type 41 record
1109 Form:

None
5ESS Switch Feature:

/CFNS
Parameter Forms Completed:

cfwlpa

Call Hold
1107 Form:

Type 00 record, weighted value of 4 in column 48
1109 Form:

None
5ESS Switch Feature:

/MWCH1 - if line also has Call Transfer or Call Wait Terminating.

/MWCH2 - if line does not have Call Transfer and Call Wait Terminating.
Parameter Forms Completed:

None

Conference Calling (6-way Calling)
1107 Form:

Type 00 record, weighted value of 1 in column 49
1109 Form:

None
5ESS Switch Feature:

/MW6WC
Parameter Forms Completed:

none

Call Transfer (3-way Calling)
1107 Form:

Type 00 record, weighted value of 4 in column 49
1109 Form:

CTD (Call Transfer DID) to DOD indicated by a weighted value of 4 in column 51 of the Descriptive Line.

CTU (Call Transfer Unlimited) indicated by a weighted value of 1 in column 53 of the Descriptive Line.

CTO (Call Transfer Outside) indicated by a weighted value of 4 in column 53 of the Descriptive Line.

CTI (Call Transfer Individual) indicated by a weighted value of 4 in column 54 of the Descriptive Line.
5ESS Switch Feature:

/MW3WC - for POTS Lines
The following table is used for CENTREX Lines.
Call CTU CTO CTI CTD FEATURE

Hold
dc yes yes yes yes /MWCTIA1

dc yes yes yes no /MWCTIA2

yes no yes yes yes /MWCTII1

no no yes yes yes /MWCTII2

yes no no yes no /MWCTII3

no no no yes no /MWCTII4

yes no no no no /MWCTA1

no no no no no /MWCTA2

Parameter Forms Completed:

None

Call Pickup

1107 Form:

Type 61 record for Regular CPU

1109 Form:

TAS (Trunk Answer Any Station) indicated by a weight of 1 in column 46.

5ESS Switch Feature:

/CPUO, /CPUT -

if Regular CPU and without TAS or TAS control station

/CPUO2 /CPUT -

if Regular CPU and TAS

/CPUO - if TAS only

Parameter Forms Completed:

pulpa, pumpa

If Regular CPU and TAS then SELQ1 is the TAS Pickup Group Number and SELQ2 is the Regular Pickup Group Number.

Directed Call Pickup - Barge In

1107 Form:

Type 00 record, weighted value of 2 in column 52

1109 Form:

none

5ESS Switch Feature:

/CPUDT - for line with above record

/CPUDO - for all other lines in CENTREX Group

Parameter Forms Completed:

None

Directed Call Pickup - Non-Barge In

1107 Form:

Type 00 record, weighted value of 2 in column 56

1109 Form:

None

5ESS Switch Feature:

/CPDNO - for line with above record

/CPDNT - for all other lines in CENTREX group with

Regular CPU

Parameter Forms Completed:

None

Multiple DN

1107 Form:

Type 00 record, weighted value of 1 in column 72

Type 00 record, weighted value of 2 in column 72

Type 1S record

1109 Form:

None

5ESS Switch Feature:

A mtndr form is completed for each Type 1S record.

Parameter Forms Completed:

cfwlpa

The FORWARD MULTIPE TN field is completed based on the weighted values in column 72.

Distinctive Ringing

1107 Form:

Type 00 record, weighted value of 1 in column 61

Type 00 record, weighted value of 2 in column 61

1109 Form:

DRR (Distinctive Ringing and Call Waiting Tone) indicated by a weighted value of 1 in column 48.

5ESS Switch Feature:

/DRIC - if the line has a weighted value of 1 in column 61.

/DRCWO - if DRR is indicated and no weighted value of 2 in column 61.

/DRDCW - if DRR is indicated and no weighted value of 2 in column 61.

Parameter Forms Completed:

None

Speed Call

1107 Form:

Types 05, 06, 15, 16, 18 19, 45, 64 and 76 records

1109 Form:

None

5ESS Switch Feature:

Use the following table to determine the speed call feature used for 5E6 and later generics.

1 Digit List

changeable /SC1C

nonchangeable /SC1

2 Digit List

changeable /SC2C

nonchangable /SC2

Parameter Forms Completed: sclpa, scmpa, sclist

IDP

5ESS Switch Feature -

For generics 5E6 and later all lines in a 1/1A ESS Switch CENTREX Group will be assigned the Individual Dialing Plan Feature /IDP.

Parameter Forms Completed: idplpa, idpmpa

ICLID

1107 Form:

Type 1T

1109 Form:

None

5ESS Switch Feature:

/LICNDP - if flat rate billing

/LIDADP - if usage sensative billing

Parameter Forms Completed:

None

Automatic Recall

1107 Form:

Type 1H record

1109 Form:

Automatic Recall Access Codes from Data Type 05 Subtype 31 records.

5ESS Switch Feature:

/LAR1 - if subscription access AR ALW field of LINE form equals Y if Usage Sensative access.

Parameter Forms Completed:

None

Automatic Callback

1107 Form:

Type 1H record

1109 Form:

Automatic Callback Access Codes from Data Type 05 Subtype 31 records.

5ESS Switch Feature:

/LAC1 - if subscription access AC ALW field of LINE form equals Y if Usage Sensative access.

Copyright © 2006 Lucent Technologies

Parameter Forms Completed:

None

Customer Originated Trace

1107 Form:

Type 1H record

1109 Form:

Customer Originated Trace Access Codes from Data Type 05 Subtype 31 records.

5ESS Switch Feature:

/COT1 - if subscription access COT ALW field of LINE form equals "Y" if Usage Sensative access.

Parameter Forms Completed:

None

Per Call Privacy

1107 Form:

None

1109 Form:

Per Call Privacy Access Codes from Data Type 05 Subtype 31 records.

5ESS Switch Feature:

/DIDNP - if subscription access PCP ALW field of LINE form equals "Y" if Usage Sensative access.

Parameter Forms Completed:

None

Figure 1 LDMAP SYSTEM DESCRIPTION FEATURE MAPPING TABLE

COLUMN	WEIGHT	FEATURE ACRONYM	FEATURE NAME
44	1	OP	Originating Priority
44	2	TP	Terminating Priority
44	4	TST	Test Line
45	4	OSI	Open Switch Interval
46	4	SLL	Sleeve Lead
47	2	AMA	Automatic Message Accounting
47	4	HOM	Hotel-Motel Service
48	1	STB	Special Trunk Billing
50	1	AID	Automatic Identified Outward Dialing
53	1	IMB	Call Forward - Inhibit Make Busy
53	2	ILB	Call Forward - Inhibit Line Busy
53	4	OV	Overflow
54	1	DLY	Delay
54	2	CDA	Customer Data Accumulator
54	4	PDT	Prohibit Terminating Disconnect Timing
55	1	FCA	Flash for City of Origin Announcement
55	2	60A	60A CPS Console
56	4	MBL	Mobile
57	1	MSG	Message Detail
57	2	ITQ	Inhibit Trunk Queuing
57	4	INF	Inflow
58	4	IDB	INWATS Data Base DN Indicator
59	1	IWD	INWATS Directory Number
59	2	TLI	Transmission Loss Insertion
59	4	BIS	Busy Idle Status
60	4	ARQ	Permit Access to Restricted Queue
61	2	DDT	Distinctive Ringing and Call Waiting Tone
64	1	CSR	Customer Station

Copyright © 2006 Lucent Technologies

			Rearrangement
64	2	IAS	Inactive Line Feature
64	4	AGLI	Agent Login
65	1	UTD	Usage Sensative Three-Way Calling
65	2	TIC	Test Interexchange Carrier
66	1	MWI	Message Waiting Indicator
66	2	TLDN	Temporary Local Directory Number
66	4	SDN	Second Local Directory Number
67	4	HMI	Home Intercom
68	1	CEK	Centrex Electronic Key
68	2	CCPIC	Customer Changeable PIC
68	4	CWC1	City Wide Centrex
69	1	PAS	Project Accounting Service
69	4	SAN	Special Access Number Indicator
70	1	VDP	Voice Data Protection
70	2	RDF	Residential Data Facility Pooling
70	4	SVP	Single Line Variety Package
71	1	MSC	Message Service Center
71	2	VMW	Visual Message Waiting

Figure 2 LDMAP SYSTEM DESCRIPTION 1107 TYPE 0 NO5E

1107 TYPE	FEATURE ACRONYM	FEATURE NAME
02	MSN	Master Scan Point Number
03	SDN	Signal Distributor Number
04	PBX-MBK	PBX Make-Busy Keys
07	CTS	Cellular Telephone Service
10	OSI	Open Switching Interval
11	AIOD	AIOD Index
12	CGA	Carrier Group Alarm
13	GSAN	Ground Start Applique Number
14	EBN	External Billing Number
17	PNBDN	Public Network Billing Directory Number
20	PMBKEYS	Position Make-Busy Key
21	PREF-MLH	Preferential Multi-Line Hunting Lists
22	SFG-POTS	Simulated Facilities Group - POTS
24	TLG	Traffic Line Group
25	DALTNN	Direct Access Line - Trunk Network Number
27	AGT-MBK	Agent Make-Busy Key
28	INH-INTR	Inhibit Intraflow Key - AQTL Queue
29	NITE-KEY	Local Night Transfer Key
30	SDA	Signal Digit Analysis
31	INTER-Q	Interflow Queue
32	VDC	Visual Display Code
33	IIK	Inhibit Inflow Key
34	60B	60B CPS Console
35	CLDI	Calling Line Display Index
39	CSDC	Circuit Switching Digital Capability
40	CONS-CI	Console Call Indicator Lamp
42	CILA	Call Indicator Lamp - Attendant Intercept
43	CILN	Call Indicator Lamp - No Answer Transfer
44	CILP	Call Indicator Lamp - Incoming Priority
47	STDN	Satellite Transfer Directory Number
48	CCIL	Call Indicator Lamp - Attendant Conference
50	ACOF	Attendant Control of Facilities
53	CIBP	Call Indicator Lamp - Busy Line Incoming

Copyright © 2006 Lucent Technologies

54	CIBD	Call Indicator Lamp - DID/CCSA Busy Line
55	CIBT	Call Indicator Lamp - Tie Line
56	CIDD	Call Indicator Lamp - Don't Answer
57	CIAP	Call Indicator Lamp - Direct Dial
58	CIDP	Call Indicator Lamp - Priority AUTOVON
59	SFG-CTX	Simulated Facilities Group - CTX
60	RLS	Release Link Satellite
63	TGN-LPS	Trunk Group Busy Lamps
65	DAG	Data Accumulation Group
66	CSDD	Call Store Data Display
67	CDAR	Customer Dialed Account Recording
68	QNS	Queue Number - Split
69	NORG	Split/Reporting Group Size
70	SUR	Surcharge for Hotel/Motel
71	ACMOS	ACMOS for Selected Intercom Calls
72	DLG	Data Link Groups
73	SCRAF-AC	CSRAF Security Authorization Code
74	VML	CSRAF Variable Message Length Channel
75	CSRAF-IV	CSRAF In-Service Verify
77	OTQ1	Outgoing Trunk Queuing
79	CFG	Customer Facility Groups
80	STAR	Silence - Tone - Audible Ringing
81	APCF	AUTOVON Priority Call Forwarding
82	ACS-MDR	Authorization Code Screening
83	DNCI	Dedicated Network Customer Number
84	CFPF-A	Call Forwarding Private Facilities
85	CPUG	Centrex Group to Call Pickup
86	CFPF	Call Forwarding Private Facilities
87	CFPF	Call Forwarding Private Facilities
88	CTX-CI	Centrex Carrier Interconnect
89	CWC1	City Wide Centrex
90	LASS-SL	LASS - Screen List
91	BCLID	Bulk Calling Line Identification
92	BCLID	Bulk Calling Line Identification
93	SCF	LASS- Selective Call Forward
1A	MDS	Message Desk Service
1B	APX-CF	Autoplex 100 Call Forward
1C	TLDN-MIN	TLDN to Mobile Identification Number
1D	ICLID	Individual Calling Line Identification
1G	LSA	Limited Service Area
1J	SCR	Selective Call Reject
1K	SCF	Selective Call Forward
1L	DA	Distinctive Alert
1M	BCLID	Bulk Calling Line Identification
1N	RA	Remote Access Service
1P	APX-PCD	Paging Code Data
1Q	VDP	Voice Data Protection
1U	DN-CTX	DN-CTX Extension Digit Replacement
1V	SCD	Selective Carrier Denial
1W	SCF	Separation of Selective Call Forward

Figure 3 LDMAP SYSTEM DESCRIPTION 1107 TYPE NO5E

Copyright © 2006 Lucent Technologies

SEC. 12: ODA OFF-LINE LARGE TERMINAL GROWTH PLAN

1. GENERAL

This section describes the LTG (Large Terminal Growth) software schedule and the software tools provided by the 5ODA system to grow the ODD (Office Dependent Data). Growth data (non-equipment data) will be added to the existing (dumped) data on an off-line processor at the ODA production facility at either the Network Software Center or Lisle Center 5ESS Switch ODA Production Facility. The ODA off-line process merges the growth and existing data and the complete input forms database processed through mapping and **dbgen**, and delivered to the office site.

This section describes the responsibilities of the Lucent Technologies SEE (System Equipment Engineer) for the large terminal growth procedure. The following steps are necessary to perform the ODD growth:

1. decompile the ODD from binary to ascii base relations,
2. reverse map the dumped data to the existing compatible software release to the ODA input view database,
3. merge the dumped data with the new growth (non-equipment) data,
4. perform the database validity checks, and
5. map the input data into a new machine loadable database.

For 5E6 and later LTGs, an additional optional off-site procedure can be added. Seventeen days of recent changes can be reapplied after the data has been mapped to the final machine loadable format.

The OSDM (Office Software Database Management) organization at NSC monitors the general progress of each office. The success of this off-site processing depends on the timely completion of the LTG schedule requirements. The *final* interval outlined for the off-site processing is a very tight schedule. However, the schedule can be met if each day's objectives are met.

2. LARGE TERMINAL GROWTH REGISTRATION

Before any office can begin off-line growth procedures, the office must be registered in the 5ODA registration system at least 6 weeks prior to the date the preliminary off-site processing is scheduled to begin. The procedure to register a large terminal growth office is the same procedure used to register initial orders. This procedure is described in detail in Division 1, Section 7,*5ODA User's Guide*. After the registration form has been completed and inserted into the registration database, the OSDM organization is automatically notified of the registration and begins initialization procedures. Four logins are set up for each large terminal growth office. One login is provided for the Lucent Technologies SEE. This login is the six character alphanumeric base and control number preceded by *we* (e.g. we1234d0). Two logins are set up for customer use, one is for line (li) error correction (e.g. li1234d0) and the other is for trunk (tr) error correction (e.g. tr1234d0). The support organizations are provided a login which is the office's base and control number preceded by *re* (e.g. re1234d0). This last login is a read-only login to review the office input data. Login procedures are described in Division 1, Section 7, the *5ODA User's Guide*.

3. LARGE TERMINAL GROWTH TAPE REQUIREMENTS

The customer must provide three sets of tapes for LTG,

Copyright © 2006 Lucent Technologies

1. the new bulk data tape,
2. the *Preliminary Dump* tape, and
3. the *Final Dump* tape.

Only one set of tapes is required for the preliminary dump. The final dump requires two sets of tapes of the ODD and ECD. All the tapes are required to be 2400 foot 9-track magnetic tapes. All of the tapes must be labeled with the following information:

- the office name.
- the office base and control number.
- the content of the tape; whether ODD or ECD, and if it is the preliminary dump, the final dump, or the new bulk data.
- the date that the dump occurred (if dump tape).
- the Software Release issue and release of the dump (if dump tape).
- the tape series number of the total number of tapes (e.g. 1 of 5, 2 of 5, etc.).

The new bulk data tapes are sent to the OSDM group located at the Network Software Center. The actual dump of the ODD and ECD from the 5ESS Switch is performed by the customer or Lucent Technologies. The tapes for both the preliminary and final dumps are shipped air express (overnight carrier only) to the OSDM group at the following address:

Send ODD/ECD tapes to:	**Send new bulk data tapes to:**
Lucent Technologies Network Software Center 2600 Warrenville Rd. Lisle, Illinois 60532	Lucent Technologies Network Software Center 2600 Warrenville Rd. Lisle, Illinois 60532
Attn: 5ESS Switch ODD/ECD	Attn: ODA Tape Processing

The ECD, ODD, and new bulk data tapes are read into the appropriate directory structure on the production computer.

The following sections will detail the processing required for both the preliminary and final office dumps.

4. LARGE TERMINAL GROWTH SCHEDULES

The standard interval for off-line large terminal growth of the ODD and ECD is 5 weeks. This includes the preliminary dump and the final dump of the ODD and ECD.

The time interval for the preliminary dump processing is 3 weeks. The SEE processes the preliminary dump, using manual data entry to remove all Level 1, 2, and 3 errors from the dumped database. The purpose of the preliminary dump is to analyze any database inconsistencies, and to anticipate the amount of error correction required in the final dump.

For 5E5, the final dump is processed within a 12 day interval. For 5E6 and later, the final dump interval is 17 days. The SEE ensures that the daily goals of the software schedule, outlined in the following section, are met.

Copyright © 2006 Lucent Technologies

The following schedule outlines the preliminary and final dump processes showing the time line in weeks and days ending with the Friday night of the on-site large terminal growth.

4.1 Registration, Initialization, Load New Data

An office must first be registered and initialized before any processing of the data.

4.1.1 Week - 13

The SEE registers the office.

4.1.2 Week - 7

1. OSDM initializes the office and the logins on the appropriate 5ODA production machine.
2. A new database is initialized containing only standard non-equipment data. Therefore, all form types are accessible, except those that start with **eq**.
3. When the bulk data tape arrives, the OSDM group loads the tape into the new database using the **readbatch** and **batchload** commands. The **batchload** command ensures that all the data records are marked internally as new data. All data that is manually inserted is also marked as new data.
4. The SEE and the customer then correct any existing errors. The SEE executes the **crosscheck** command to identify any cross check errors in the database, which then must be corrected. All Level 1, 2, and 3 errors are removed from the new database before it is merged with the preliminary dump data.

4.2 Preliminary Dump

A detailed LTG schedule can be viewed on the 5ODA PSS (Production Scheduling System). This schedule is automatically generated in PSS based on the on-site LTG date. The OSDM will provide instructions on how to access the PSS data if needed. All preliminary dump processing is the responsibility of the SEE. The time interval for the preliminary dump processing is 18 days and should be concluded 2 weeks prior to the on-site large terminal growth date.

4.2.1 Week - 5

1. The customer dumps the ODD and ECD on separate tapes and duplicates them. (The ECD dump is needed to determine the office VTOC (Volume Table of Contents)). The tapes are sent to the OSDM group which is located at the Lisle 5ESS Switch Production Facility.
2. OSDM loads the tapes onto the appropriate 5ODA production machine.
3. The **readdump** command reads the dump tapes onto the processing machine.
4. Following a successful **readdump**, the **revdbgen revmapping** process is automatically submitted to decompile the ODD and recover the dumped data to existing compatible software release version of the 5ODA input forms. This process automatically generates a file of base relation cross checks **(basecheck)**.
5. The SEE uses the **crosscheck** command and manual data entry to remove all errors from the preliminary dump database. The data must be free of all Level 1, 2, and 3 errors prior to merging with the new growth data.

Copyright © 2006 Lucent Technologies

6. The SEE then contacts OSDM to have the new growth data added to the preliminary office dump. OSDM uses the **merge** command to merge the new data with the data from the preliminary dump to create the preliminary merged database.

7. During the merge, duplicate records may be produced. These records will not be inserted into the merged database. The duplicate records are saved in the **prntfiles** directory where the SEE and the 5ODA Customer Technical Support can review them.

8. The SEE uses the **crosscheck** command and manual data entry to remove all errors from the preliminary merged database.

9. Base relation cross checks (**basechecks**) are analyzed by the 5ODA Customer Technical Support, and they determine if the update should be applied on-site before the final dump is made.

10. The SEE reviews the analysis report, which is automatically generated during the preliminary data dump processing, to ensure that the office has enough memory.

11. OSDM prepares the preliminary dump database for the final office dump using the command **finalgrow**. The office records in the **prntfiles** directory are saved in the **preprntfiles** directory. All other data from the preliminary dump is removed.

12. This completes the preliminary processing.

4.3 Final Dump

The following steps occur in the 12 day (5E5) or 17 day (5E6 and later) interval prior to the on-site LTG. Any differences between schedules for 5E5 and 5E6 and later are noted for the specific step.

4.3.1 Week - 2 Tuesday (5E5)
Week - 3 Friday (5E6 and later)

1. The final office dump, which was performed on the preceding Monday for 5E5 or the preceding Wednesday for 5E6 and later, must arrive at the Lisle 5ESS Switch Production Facility by 9AM Tuesday (5E5) or Friday (5E6 and later). The OSDM group loads the final dump tapes using the **readdump** command. The reverse process, **revdbgen and revmapping**, is then executed. The process decompiles the dumped ODD, automatically performs base relation crosschecks, and automatically runs Level 1 and Level 2 error checks.

4.3.2 Week - 2 Wednesday (5E5)
Thursday (5E6 and later)

1. When these processes have completed successfully, the final dump database is opened up to the SEE for error correction. The SEE uses the **crosscheck** command and manual data entry to remove all Level 1, 2, and 3 errors from the database.

2. The SEE uses the **crosscheck** command and manual data entry to remove all Level 1, 2, and 3 errors from the new growth data. The new data must be free of all Level 1, 2, and 3 errors prior to merging with the final dump database.

3. The SEE contacts 5ODA Customer Technical Support to have the new growth data added to the final

Copyright © 2006 Lucent Technologies

office dump. Both the final dump database and the database containing the new data must be free of Level 1, 2, and 3 errors. OSDM use the **merge** command to merge the new data with the data from the final dump to create the merged database.

4. During the merge, duplicate records may be produced. These records are not inserted into the merged database. The duplicate records are saved in the **prntfiles** directory where they can be viewed by the SEE and the 5ODA Customer Technical Support.

4.3.3 Week - 2 Friday (5E5) Saturday (5E6 and later)

1. The SEE uses the **crosscheck** command and manual data entry to remove all errors from the merged database.

2. The merged database must be error free by noon Saturday when it will be frozen. Once the database is frozen, the SEE executes the **mapping** and **dbgen** commands which map the data into 5ESS Switch base relations and generates the new ODD. This large processing routine requires the weekend to process so that the large terminal growth schedule can be met.

3. The office records are generated.

4.3.4 Week - 1 Monday

1. The **mapping** and/or **dbgen** problems are resolved by Monday morning. 5ODA Customer Technical Support reviews the results of the **dbgen** command.

   For 5E6 or later, the customer can apply the last 17 days of recent changes to the ODDs. The Recent Change log file is electronically transferred from the 5ESS Switch site to the Lisle Center 5ESS Switch ODA Production Facility via SCANS (Software Change Administration and Notification System). The RC log file is first transferred from the switch to a SCANS machine by Lucent Technologies SUMS (Software Update Management System) personnel. It is then automatically transferred to the 5ODA production machine for **offrcr** command processing. If the **dbgen** command has completed successfully, the **moverscan** process automatically submits **offrcr**.

2. The OSDM group executes the **maketape ldft** command to generate the new ODD tapes. They also produce the hard copy listings of the office records and the functional listings. One copy of each is mailed to the site along with the ODD tape(s). A tape of the office records and functional listings is sent to the SEE responsible for the office.

4.3.5 Week - 1 Tuesday

1. After tape verification, the ODD tape(s) are transferred from Lisle Center 5ESS Switch ODA Production Facility to the Network Software Center for packaging and shipping preparation.

2. For offices that have run **offrcr**, the OSDM generates a hard copy listing of the recent changes which were *not* reapplied to the ODD. The OSDM also generates a hard copy listing of the recent changes which were successfully reapplied to the ODD. Both of the above items are mailed back to the site along with the ODD tape(s), office records, and functional listings.

Copyright © 2006 Lucent Technologies

4.3.6 Week - 1 Wednesday:

1. OSDM packages and ships 2 copies of the merged ODD tape(s), 1 copy of office records, and 1 copy of the functional listing to the site. In addition to the above items, for 5E6 and later LTGs, OSDM packages and ships 2 copies of the failed recent change listing and 1 copy of the successfully reapplied recent change listing.

4.3.7 Week - 1 Friday:

1. On-site large terminal growth occurs.

5. SPECIAL NOTES

The above schedule is critical to the success of each large terminal growth. It is the System Equipment Engineer's responsibility to ensure that these dates are met. The dates listed above for data entry, database evolution, input form crosschecks, **mapping** and **dbgen**, and **offrcr** for 5E6 and later are the *latest* dates possible to guarantee a timely ODD delivery. If these benchmarks are met earlier, this helps to ensure the timely delivery of the ODD and the merged database to the site.

SUMMARY OF LTG PROCEDURE (5E6 and Later)

Week From LTG Date	Day	Action
Week - 13		SEE registers office.
Week - 7		1) Initialize offices on production machine; 2) load new bulk data; 3) analyze level 1, 2, and 3 errors on the new data.
		Preliminary Dump
Weeks - 5 & - 4		1) Read in preliminary dump tapes; 2) decompile ODDs to input forms; 3) analyze and clean level 1, 2, and 3 errors from dumped data; 4) merge new growth data to dumped data; 5) analyze duplicate records; 6) analyze and clean level 1, 2, and 3 errors from merged data; 7) review "analysis" report for memory size; 8) OSDM prepare for final dump.
		Final Dump
Week - 3	Fri	1) Read in final dump tapes; 2) decompile ODDs to input forms.
Week - 2	Wed-Thur	1) Clean level 1, 2, and 3 errors on dumped data; 2) clean level 1, 2, and 3 errors on the new data; 3) merge the new growth data to the dumped data.
Week - 2	Fri-Sat	1) Clean level 3 errors on merged data; 2) map error free input forms to new base relations; 3) submit **dbgen** to build new ODDs; 4) generate office records.
Week - 1	Mon	1) Receive RC log file; 2) apply log file to new ODDs; 3) generate new ODD tape.
Week - 1	Tue-Wed	1) Generate new ODD tapes; 2) generate RC reports, office record, and functional listing.
Week - 1	Wed-Thur	1) Tape verification; 2) ship tapes and listings.
Week - 1	Fri	On-site large terminal growth.

Copyright © 2006 Lucent Technologies

Figure 1 SUMMARY OF LARGE TERMINAL GROWTH SCHEDULE (5E6 AND LATER)

SEC. 13: ODA OFF-LINE RETROFIT PLAN

1. GENERAL

This document presents the scheduling plans and procedures necessary to successfully perform an off-line retrofit of a 5ESS Switch ODD and ECD. It is written for the Lucent Technologies Systems Equipment Engineer and explains the software tools provided by the 5ODA system to perform the ODD and ECD retrofit.

The success or failure of a scheduled 5ESS Switch office retrofit and a subsequent office growth, depends on the delivery of the ODD and ECD at the time dictated by the procedures enclosed. The SEE (Systems Equipment Engineer) is responsible for execution of the retrofit data generation procedures. The SEE must insure that data error corrections are valid and applied to the database within the time constraints.

This document describes the current retrofit software schedule and software tools provided by the 5ODA system to retrofit the ODD (Office Dependent Data) and the ECD (Equipment Configuration Data) from one version of the 5ESS Switch Software Release to another. These databases are retrofitted on an off-line processor at the 5ODA production facility located at the Lisle Center 5ESS Switch ODA Production Facility or the Network Software Center in Lisle, Illinois.

The goal of these retrofit procedures is to upgrade office databases (ODD and ECD) to a new software release load. To retrofit an office to a new software release, the ODD and ECD must be reformatted. The physical structure of ODD and ECD is typically not upward compatible with the new release of the software.

1.1 Command Steps For ODD Retrofit

The following are the command steps necessary to perform the ODD retrofit:

- decompile the ODD from binary to ASCII base relations,
- cross check the decompiled base relations,
- reverse map the dumped data to the compatible existing software release of the ODA input view data base,
- evolve the ODD and ECD to the new software release compatible format,
- correct any inconsistency in the input database,
- perform the input view database validity checks, and
- map the input data into a new machine loadable database.
- In addition, seventeen days of recent changes will be reapplied after the data has been mapped to machine loadable format.

The OSDM (Office Software Database Management) organization at NSC monitors the general progress of each retrofit. The OSDM is responsible for filing a formal "jeopardy" report if a retrofit postponement is possible because processing is behind schedule. A postponed retrofit effort may cause a slip of several months and will require the entire retrofit process to begin again. This includes re-negotiation with the customer, scheduling of a new retrofit date, re-dumping the ODD/ECD, re-analysis of the new dumps by 5ODA Customer Technical Support, the re-application of error correction by the Systems Equipment Engineer and computer processing. Therefore, every effort must be made to keep a retrofit on schedule.

Copyright © 2006 Lucent Technologies

The "final" 17 day interval for retrofits outlined for the off-site processing is a very tight schedule. Experience has shown that this schedule can be met, if the Systems Equipment Engineer responsible for the retrofit strictly adheres to each day's objectives.

2. RETROFIT REGISTRATION

Before any office can begin retrofit procedures, the office must be "registered" in the 5ODA registration system at least 4 weeks prior to the date the off-site processing at NSC is scheduled to begin processing. The procedure to register a retrofit office is the same procedure used to register initial orders. This procedure is described in detail in Division 1, Section 7, "The 5ODA User's Guide". After the registration form has been completed and inserted into the registration database, the 5ESS Switch Software Production Organization is automatically notified of the new registration and begins initialization procedures. Four logins are set up for each retrofit office. One login is provided for the Lucent Technologies System Equipment Engineer. This login consists of a six alphanumeric base and control number preceded by 'we' (e.g. we1234d0). Two logins are set up for customer use for line and trunk error correction (e.g. li1234d0 and tr1234d0). The fourth login consisting of the office's base and control preceded by 're' (e.g. re1234d0) is a read-only login for the support organization to review the office input data. Login procedures are described in the Division 1, Section 7.

3. RETROFIT TAPE REQUIREMENTS

The customer dumps the ODD and ECD onto a tape five weeks prior to the retrofit and again 17 days before the actual retrofit. The first data dump is the "Preliminary Dump" and the second data dump is the "Final Dump". The preliminary dump requires one set of dump tapes, while the final dump requires two sets of dump tapes. The dump tape for the ODD and ECD must be a 2400 foot 9-track magnetic tape. Tapes must be labeled with the following information:

- the office name,
- the office base and control,
- the content, whether ODD or ECD, preliminary or final dump,
- the date dump occurred,
- the Software Release type, issues, and release of the dump, and
- the tape series number (e.g. 1 of 5, 2 of 5, etc.).

The actual dump of the ODD and ECD from the 5ESS Switch is performed either by the customer or Lucent Technologies. Tapes for preliminary and final dumps are shipped air express (overnight carrier only) to the Office Software Database Management group at the following address:

Lucent Technologies
Network Software Center
2600 Warrenville Rd.
Lisle, Illinois 60532

Attn: ODA Tape Processing

The ECD/ODD tapes are read into the appropriate 5ODA production machine. The Systems Equipment Engineer responsible for the retrofit is notified by the Office Software Database Management group on which production machine the retrofit will be processed.

Copyright © 2006 Lucent Technologies

4. RETROFIT SCHEDULES

The standard interval for off-line retrofit of the ODD and ECD is 5 weeks. This includes the preliminary dump and the final dump of the ODD and ECD.

The time interval allowed for the preliminary dump processing is 3 weeks. The Systems Equipment Engineer is responsible for the processing of the preliminary dump. After the ODD is decompiled, base relation inconsistencies are identified and analyzed by 5ODA Customer Technical Support. Most problems are corrected by the SEE and customer at the input form level. Recent Change updates and/or overwrites to the live switch will be determined if absolutely necessary, on a case-by-case basis, by the 5ODA Customer Technical Support group. The purpose of the preliminary dump is to analyze any database inconsistencies, identify data to be corrected on switch before final dump, and to anticipate the amount of error correction required in the final dump.

The time allowed for the final dump is 17 days. The Systems Equipment Engineer assigned to the retrofit is responsible for insuring that the schedule outlined in this section is met. The final dump period is a tight schedule. Experience has shown that the schedule can be met if the daily goals are met.

Note that non-standard database configurations are not supported. 5ODA only rebuilds to standard data conditions.

The following schedule shows the time line in weeks and days prior to the Friday night retrofit date.

Week -10:

The SEE registers the office.

Week -7:

OSDM initializes the logins and office on the appropriate 5ODA production machine. A report is sent electronically to the SPOC (Single Point of Contact) at the region identifying the production machine on which the office will be processed.

4.1 The Preliminary Dump

After the registration, a detailed day-by-day retrofit schedule may be viewed on the 5ODA PSS (Production Scheduling System). The daily benchmark dates are automatically generated in PSS based on the date of the on-site retrofit. Contact the Office Software Database Management organization at NSC for instructions on how to access the PSS database. All preliminary dump processing is the responsibility of the Systems Equipment Engineer.

The following procedures begin 5 weeks prior to the actual on-site retrofit and complete 2 weeks before the on-site retrofit.

Week -5:

1. The customer dumps the ODD and ECD to tape(s). The tapes are sent to the OSDM located at the Lisle 5ESS Switch Production Facility.

2. OSDM loads the tapes onto the appropriate 5ODA production machine.

3. Following a successful **readdump**, the **revdbgen revmapping** process is submitted automatically to decompile the ODD and recover the dumped data to the existing compatible software release version

Copyright © 2006 Lucent Technologies

of 5ODA input forms. This process automatically generates a file of base relation cross checks via the **basecheck** command.

4. The base relation checks, **basecheck** are analyzed by 5ODA Customer Technical Support. The Customer Technical Support determines whether or not the Recent Change update will be applied on-site before the final dump is made. This listing may be viewed by executing **listf basecheck**.

The SEE should analyze all Level 1, Level 2, and Level 3 errors that exist in the new target software release input view database. The commands used are **errforms**, **de**, and **crosscheck**.

1. Review "analysis" to insure the office has enough memory.

This completes the "preliminary" processing.

4.2 The Final Dump

The following steps occur within the 17 day interval before the on-site retrofit is to occur. All command execution and data correction is performed by the SEE. The steps are broken down by day.

- ***NOTE:*** The objective for each day must be strictly adhered to or the retrofit date may be jeopardized.

Week -3 Friday:

1. The final dump of the ODD and ECD, which was performed the preceding Wednesday, must arrive at the Lisle 5ESS Production Facility by 9AM on Friday, Week -3. The customer must send two sets of final dump tapes.

2. OSDM loads the tapes on the appropriate 5ODA production machine.

3. Following a successful **readdump** the **revdbgen revmapping** is automatically submitted to decompile the ODD and recover the dumped data to existing software release compatible version of 5ODA input forms. This process automatically generates base relation cross checks (**basecheck**).

4. 5ODA Customer Technical Support analyzes the base relation crosscheck errors generated as part of the reverse mapping process. These errors are then analyzed against the error listing from the preliminary dump. If there are differences, the SEE and/or the customer will be contacted if needed.

5. Following a successful reverse mapping the office is automatically evolved to the new software release input database. The process automatically runs Level 1 and Level 2 error checks. The output of the error check run may be viewed by executing **listf errforms.EVL**

Week -2 Monday:

1. The new software release ODA input database is open and available for Level 1, Level 2, and Level 3 error correction. Both the SEE and the customer use

— the **de** command to perform data entry,

— the **errforms** command to generate Level 1 and Level 2 error listings, and

— the **crosscheck** command to generate listings of Level 3 errors and to freeze the database.

1. The **thaw** command is used if more data entry is needed. At this time some input forms may be locked due to the sensitivity of the data.

NOTE: Only error correction may be done. **NO GROWTH DATA IS ALLOWED.**

This data entry window is available Wednesday through Friday and must be strictly adhered to, or the retrofit date may be in jeopardy.

Week -2 Saturday:

1. By Saturday morning, the input database must be totally error free and frozen.
2. The SEE executes the **mapping** command before 5 P.M. on Friday. The **mapping** command maps the input data into 5ESS Switch base relations to generate the new ODD.
3. The ECD is evolved by the **evolecd** command that is automatically called from the **mapping** command.
4. The SEE executes the **records every** command to generate a complete list of office records.

Week -1 Sunday:

1. 5ODA Customer Technical Support reviews the mapping output and submits **dbgen.**

Week -1 Monday:

1. **Mapping** and/or **dbgen** problems are resolved by Monday morning. 5ODA Customer Technical Support reviews **dbgen** results.
2. The customer can apply the last 17 days of recent changes to the new ODDs. The Recent Change log file is electronically transferred from the 5ESS Switch site to Lisle Center 5ESS ODA Production Facility via SCANS (the Software Change Administration and Notification System). The RC log file is first transferred from the switch to a SCANS machine by Lucent Technologies SUMS (Software Update Management System) personnel. It is then automatically transferred to the 5ODA production machine for **offrcr** processing. If **dbgen** has completed successfully, the **moverscan** process will automatically submit **offrcr**.

Week -1 Tuesday:

1. OSDM generates the merged ODD and ECD tape.
2. If an office has run the **offrcr** process, OSDM generates a hard copy listing of successful and non-successful Recent Changes applied to the ODD. The Recent Changes that were not successful are placed on the ODD/ECD tape to be used on site in the post-**offrcr** process the night of the retrofit.
3. OSDM generates hard copy listings of the office records, functional listing, and **offrcr** reports. One copy of each is mailed to the site along with the ODD/ECD tape(s).

Copyright © 2006 Lucent Technologies

Week -1 Wednesday:

1. After tape verification, the ODD/ECD tape(s) are transferred from the Lisle Center 5ESS Switch ODA Production Facility to the Network Software Center for packaging and shipping preparation.

2. OSDM packages and ships 2 copies of the merged ODD/ECD tape(s), 1 copy of office records, 1 copy of the functional listing to the site. For offices that used the **offrcr** process, OSDM packages and ships 2 copies of the failed recent change listing and 1 copy of the successfully reapplied recent change listing.

Week -1 Friday:

1. On-site retrofit occurs.

5. SPECIAL NOTES

It is important to note that the above dates are critical to the success of each retrofit. It is the Systems Equipment Engineer's responsibility to ensure that these dates are met. The dates listed above for data entry, database evolution, input form crosschecks, **mapping** and **dbgen**, and **offrcr** are the *latest* dates possible to guarantee ODD delivery. These benchmarks, *if met earlier*, will help ensure the timely delivery of the ODD/ECD to site.

If there is a data problem that cannot be resolved, the entire retrofit process will be postponed until a correction is found and implemented. All parties involved in each off-line retrofit of ODD/ECD (Software Production, SEE, 5ODA Customer Technical Support, and customer) must provide off-hours support, if needed.

The following table summarizes the retrofit schedule.

SUMMARY OF RETROFIT SCHEDULE

Week From Retrofit Date	Day	Action
Week -10		SEE registers office.
Week -7		Initialize offices on production machine.
		Preliminary Dump
Weeks -5 & -4		1) Read in preliminary dump tapes; 2) Decompile ODDs to input forms; 3) Evolve input forms to new software release; 4) Analyze level 1
		Final Dump
Week -3	Fri	1)Read in final dump tapes; 2) Decompile ODDs to input forms; 3) Evolve input forms to new software release.
Week -2	Mon-Fri	Clean level 1
Week -2	Fri-Sat	1) Map error free input forms to new base relations; 2) Evolve ECD; 3) Generate office records.
Week -1	Sun	1) Verify **mapping** output; 2) Submit **dbgen** to build new ODDs.
Week -1	Mon-Tue	1) Receive RC log file; 2) Apply log file to new ODDs.
Week -1	Tue-Wed	1) Generate new ODD/ECD tapes; 2) Generate RC reports, office record, and functional listing.

Copyright © 2006 Lucent Technologies

Week -1	Wed-Thur	1) Verify tape; 2) Ship tapes and listings.
Week -1	Fri	On site retrofit.

Figure 1 SUMMARY OF RETROFIT SCHEDULE

Copyright © 2006 Lucent Technologies

DIV. 8: ENGINEERING ASSIGNMENTS

Copyright © 2006 Lucent Technologies

SEC. 1: EQUIPMENT ASSIGNMENT

1. GENERAL

The sections of this division describe the assignment requirements for the various input forms and records that define the equipment arrangements for a 5ESS Switch office. The forms described here usually have a form name starting with the letters EQ (e.g., EQIM, EQLU, etc). The records are in the 5700 and 5800 Series.

1.1 VIRGOS

For new offices, the equipment data is populated using Lucent Technologies' VIRGOS (Visual Interactive Regional Generation of Specifications) system upon completion of the 384 specification. This may be done automatically using VIRGOS, or manually using the VIRGOS mock specification. The data generated by VIRGOS includes the following:

- Switching Module equipment configurations
- PICB (Peripheral Interface Control Bus) and PIDB (Peripheral Interface Data Bus) assignments
- Circuit pack types and locations
- CLEI (Common Language Equipment Identification) codes
- Equipment status
- CLI (Change Level Indicator) assignments

NOTE: VIRGOS does not generate scanner or distribute assignments.

2. CHANGE LEVEL INDICATORS

The CLIs (Change Level Indicators) are 32 bit numbers, in which each bit may be used independently of other bits in controlling the software. Although most circuits are presently limited to one or two options or versions, with a corresponding limitation in the number of valid CLIs, in general a circuit may be ordered with a combination of options, each with its own CLI bit position.

CLIs are used by the 5ESS Switch software for two purposes:

- To select various software subroutines used to control or diagnose the equipment; and
- To select the appropriate message content (e.g., the CLEI code and pack designation) for displaying TLPs (Trouble Locating Procedures) to the switching personnel.

BTSR CLIs are included with the MCTSI CLI. With the SM-2000 Switch, some core circuit CLIs have been separated. The units that now have unique CLIs include the TSI, TSIS, MH, DX, Memory, DLIs, (E)NLI, and BTSR. The CLNKs have unique CLIs, but are not used. The MCTSI CLI contains the CLI value for the following set of units: MCP, APC, BSN, CI, PI, C/D, and power.

2.1 CLI Assignment Table Layout

The CLI Assignment Tables (beginning with Figure 1) provide current CLI data. This table of valid CLI values is updated whenever new or changed CLI values are received.

Copyright © 2006 Lucent Technologies

Figure 1 is sorted by division and section. The data is displayed in the following manner:

CLI ASSIGNMENT TABLE Layout

Column	Description
FORM	Name of each input form
FIELD	Individual field names for a particular input form.
DEPENDENCIES	When another field entry determines CLI value, a comment to that effect is be made here.
CLI	CLI hexadecimal value. When CLI values must be "OR"ed to obtain the correct value, a note is included in the table.
DESCRIPTION	Descriptive comments.
J-DRAWING	Valid J-Drawing and list combinations.

2.2 SMPU CLI Assignment Table

Figures 2, 3, 4 and 5 are designed to assist in determining the appropriate value for the SMPU CLI field located on the EQIM form. The SMPU CLI Assignment Table and Worksheet eliminate the need to "OR" hexadecimal values. To determine the appropriate SMPU CLI value, first use the Table in Figure 2 to determine the hardware configuration. Enter a check mark in the column titled "CHK" for each applicable hardware configuration. When the table is complete, enter a "1" in all bit positions checked ("BIT"column of the table) on the worksheet (Figure 3). Fill the remaining blank bit positions with zeroes. Using the binary to hexadecimal conversion table on the worksheet, determine the hexadecimal value of each of the sets of binary bits (four each). Some of the hexadecimal values have been filled in because many of the high order bits are not used. When the hexadecimal value has been determined, this is the actual value entered into the SMPU CLI field. Sample completed worksheet and table entries are given in Figures 4 and 5. Figure 6 provides a blank DLI CLI Assignment Table format.

Figure 7 provides translation assignment activity for TRCU2 OLI Boards. This table shows the history and movement of these CLI translations across various ODA screens and Software Releases.

3. SCAN POINT, DISTRIBUTE POINT AND METALLIC TEST BUS ASSIGNMENTS

Since both LUCENT and 5ESS Switch owners make Scan Point, Distribute Point, and Metallic Test Bus assignments to various input forms, the following procedures should be used to avoid duplication of assignments.

3.1 LUCENT ASSIGNMENTS

The equipment forms are populated automatically using VIRGOS or manually using the VIRGOS mock specification.

A. When the VIRGOS to ODA (Office Data Assembler) interface is utilized, the following activities are recommended.

1. Use the "records" command to obtain a copy of the following office records:

Office Record	Description
5840	Scan Point Number Assignment Record
5841	Distribute Point Number Assignment Record
5842	Metallic Test Bus Assignment Record

2. Use the office records to make any required scan, distribute and Metallic Test Bus assignments per engineering assignment rules (SD-5D007-01).

3. Enter data for the following:

Copyright © 2006 Lucent Technologies

- Metallic Test Bus for Line Units on the EQLU form,
- Metallic Test Bus for Trunk Units on the EQTU form,
- Metallic Test Bus for LTD (Local Test Desk) test trunks on the EQTUP form (for Circuit Type (CKTTYP) of TRKTST only),
- Protocol Circuits on the EQPRO form,
- Miscellaneous scan points on the EQSPN form,
- Miscellaneous distribute points on the EQDPN form. Crosschecks may be run, and any errors resolved, at the discretion of the person responsible for the data.

When the data is manually entered from a VIRGOS mock specification, the following activities are recommended.

1. Populate the EQMSU and EQMSP forms.
2. Use the "records" command to obtain a copy of the following office records:

Office Record	Description
5840	Scan Point Number Assignment Record
5841	Distribute Point Number Assignment Record
5842	Metallic Test Bus Assignment Record

3. Use the office records to make any required scan, distribute and Metallic Test Bus assignments per engineering assignment rules (SD-5D007-01).
4. Populate the remaining equipment forms entering the Metallic Test Buses, miscellaneous scan and distribute assignments.
5. Crosschecks may be run, and any errors resolved, at the discretion of the person responsible for the data.

3.2 5ESS SWITCH OWNER ASSIGNMENTS

Throughout the input forms, scan, distribute, MTB (Metallic Test Bus) and LTP (Logical Test Port) assignments may be required. The following activities are recommended to obtain the necessary assignments.

1. Use the "records" command to obtain a copy of the following office records:

Office Record	Description
5271-3	Logical Test Port Assignment Record
5840	Scan Point Number Assignment Record
5841	Distribute Point Number Assignment Record
5842	Metallic Test Bus Assignment Record

2. The output will indicate which points are available for assignments, as well as those already assigned. Use the records to make any required scan, distribute and LTP (Logical Test Port) assignments. The only MTB (Metallic Test Buses) required are for the DC Jacks on the Test Access Unit mounted on the TLWS (Trunk and Line Work Station).

Copyright © 2006 Lucent Technologies

3. The assignments are then entered on the input forms.

4. Maintain a marked copy for use by other personnel responsible for data entry.

FIELD NAME	DEPENDENCIES	CLI (Hex)	DESCRIPTION	J-DRAWING
	Enter the hexadecimal sum of appropriate hexadecimal bit values corresponding to the hardware ordered/equipped (also see Figures 43, 44, 45, 46, and 47).			
SM-2000 CLIs: MH 0/1 CLI		00	(5E9(2)) SM-2000, Release 1, UN538 (32 timeslots) Message Handler.	J5D003NA-1, L10A
		01	5E10(1) For VCDX on an SM-2000.	J9D003NA-1
SMPU4/SMPU5 IMPU CLI	With Ethernet	C	5E16(2) and later UN550	SMPU4 (J5D003NA-1,L40)
	Without Ethernet	4		SMPU5 (J5D003NG-1,L35)
SMPU4 IMPU CLI	UNIT TYPE on EQIM form must be SM2000	0x1928	5E16(2) and later UN732 Note: MH is only allowed for MHPPC.	J5D003NA-1,L42
SMPU5 IMPU CLI	UNIT TYPE on EQIM form must be SM2005	0x1928	5E16(2) and later UN732 Note: MH is only allowed for MHPPC.	J5D003NG-1,L37
TSICOM 0/1 CLI		00	(5E9(2)) SM-2000, Release 1. Designates a TSI common board (UM74) with DS 1 timing. Allows T1 to continue functioning when SM-2000 is in stand alone. Can be used for SM-2000 or EXM-2000, but not required for EXM-2000.	J5D003NB-1, L1A
		01	(5E9(2)) SM-2000, Release 1.1, TSIU4 common board UM74B/UM74C, power, and backplane.	J5D003NB-1, L2A
		03	(5E9(2)) SM-2000, Release 1.1, TSIU4 common board UM74B/UM74C, power, backplane, and equipped with T1 external clock references. and cable groups	J5D003NB-1, L2A ED5D00-21, Grp 454 or Grp 455
		10	5E10 SM-2000 class processor, TSIU4-2 (initial release) common board UM74C, power, and backplane.	J5D003NB-2, L3
		11	5E10 SM-2000 class processor, TSIU4-2 common board UM74C, power, and backplane.	J5D003NB-2, L3
		13	5E10 SM-2000 class processor, TSIU4-2 common board UM74C, power, backplane, and equipped with T1 external clock references; and cable groups.	J5D003NB-2, L3 ED5D500-21, Grp 454 or Grp 455
		21	Initial value for TSIU4 (SM-2000) which includes the common board UM74D, power, and backplane changes. NOTE: J5D003NB-1, L15 is used to order a jumper for the backplane that activates 30 Channel Mode (jumper equipped) or 24 Channel	J5D003NB-1, L2C

Copyright © 2006 Lucent Technologies

			Mode (not jumper equipped).	
		23	Initial value for TSIU4 (SM-2000) which includes the common board UM74D, power, and backplane changes and equipped with T1 external clock references, with Stratum 3 free-run capability.	J5D003NB-1, L2C and cable groups ED5D500-21, Grp 454 or Grp 455
		31	Initial value for TSIU4 Version 2 (SM-2000) which includes the common board UM74D, power, and backplane changes.	J5D003NB-2, L3A
		33	Initial value for TSIU4 (SM-2000) which includes the common board UM74D, power, and backplane changes and equipped with T1 external clock references, with Stratum 3 free-run capability. NOTE: J5D003NB-1, L15 is used to order a jumper for the backplane that activates 30 Channel Mode (jumper equipped) or 24 Channel Mode (not jumper equipped).	J5D003NB-2, L3A and cable groups ED5D500-21, Grp 464 or Grp 465.
TSIS CLI		00	(5E9(2) Time Slot Interchange Slice (KLU1). Recent Change only.	J5D003NB-1, L9A
NOTE: For 5E10 and later, "MCTU3" bit assignments can be 2, 3, 4, 6, 7, 12, 16, 18, 19, 24, 28 and 29; however, bit 7 must be set for "MCTU3" and "SMPU4".FOR MORE INFORMATION ON MCTU3 ASSIGNMENTS, SEE THE MCTU3 CLI VALUES TABLE AT THE END OF THIS SECTION.				
SMPU 0/1 (5E2 through 5E4) IMPU 0/1 (5E5 and later)	Non-SM-2000	01	MCTSI equipped with TN28 memory packs (and either TN875 or TN875B control pack).	J5D003AY-1, L7 or J5D003AA-2, L7
	Non-SM-2000	02	MCTSI equipped with TN56 memory packs and thus requires a TN875B (rather than TN875) control pack.	J5D003EC-1, L1 or J5D003AY-1, L8
	Non-SM-2000	04	5E2 MCTSI supports Revertive Pulsing feature either as unit type SMSMP20,	J5D003LA-1, L7
			or as unit type SMIMPU3	J5D003EC-1, L1
			or has TN127B and TN315B (rather than TN127 and TN315) packs in earlier units.	J5D003AT-1, L6 or J5D003AB-1, L5
	Non-SM-2000	08	5E2 MCTSI equipped for 5E2 power monitor feature either as unit type SMSMP20,	J5D003LA-1, L5
			or as unit type SMMCTU3, or as unit type SMIMPU3,	J5D003LB-1
			or with CN6810 wiring change and SN516 (rather than SN412) in earlier units.	J5D003EC-1, L1 J5D003AT-1, L7+LWA
	Non-SM-2000	10	MCTSI equipped for possible connection to an ASU panel either as	
			MC5D154A1 for 5E5,	J5D003LA-1, L20

Copyright © 2006 Lucent Technologies

		or with MC5D153A1B for 5E5,	J5D003EC-1, L41 or J5D003AY-1, L33
		or with MC5D125A1 for 5E4(2),	J5D003LA-1, L5
		or with a MC5D132A1B for 5E4(2),	J5D003EC-1, L39 or J5D003AY-1, L32
		or with a MC5D113A1B for 5E3,	J5D003EC-1, L23 or J5D003AY-1, L24
		or with a MC5D080A1B for 5E2.	J5D003EC-1, L9 or J5D003AY-1, L16
		or with KBN17 (SB20CORE/MCTU3) for 5E10 or with KBN20, KBN21, KBN22 (replaces KBN17). NOTE: For the MCTU3 the CLI defines the total amount of memory on the SB20CORE (KBN17 or KBN20, 21, 22) pack. The memory portion of the CLI is built by or'ing different memory CLI values until the total memory is reached.	J5D003LB-1
Non-SM-2000	40	(5E3) MCTSI is equipped with TN1377 to support the ISLU, RISLU, or PSUCOM interfaces.	J5D003LA-1, L7 or J5D003EC-1, L27
		(5E8) MCTSI is equipped with TN1377 to support the IDCU interface.	
Non-SM-2000	80	(5E2 w/Software Update 86-0052) MCTSI either as unit type SMSMP20	J5D003LA-1, L5
		or is equipped with TN871B and TN875C and wiring change for processor speed up	J5D003EC-1, L33+L34+LWB or J5D003AY-1, L27 + L28 + LM
		or with SMMCTU3	J5D003LB-1
Non-SM-2000	200	(5E2 w/Software Update 87-0057) MCTSI equipped with 4-Mbyte TN2012 memory packs.	J5D003EC-1, L31 + L32 or J5D003AY-1, L26 + LS
Non-SM-2000	400	(5E3) MCTSI is equipped with TN1397 core support pack.	J5D003EC-1, L29 or J5D003AY-1, L25
Non-SM-2000	400000	(SMP23) MCTSI equipped with TN1407 processor core board. MCTU with EMA with MC68020. When combined with DGV32MEGMEM, indicates the MCTSI is equipped with TN1423 processor core board which has 32MB of on-board memory.	J5D003AY-1, L35 or J5D003EC-1, L43
Non-SM-2000	800	(5E3) MCTSI equipped with 410AA power converter (410AA replaces 495FB and	J5D003EC-1, LAY

		494RA)	
Non-SM-2000	1000	(5E4(2)) MCTSI supports SDLC interrupt option either as unit type SMSMP20 or as SMIMPU3 with TN1617 (rather than TN872), or as SMMCTU3 with (KBN20, 21, 22 (replaces KBN17).	J5D003LA-1, L5 J5D003EC-1, L36 J5D003LB-1
Non-SM-2000	8000	(5E6) MCTU2 is equipped with UN520, SMP20 speed-up (SMP20 DATA CACHE).	J5D003EC-1, L21A
Non-SM-2000	10000	(5E5/5E10) This is the MCTU2/MCTU3 of the second (upper) SM equipped in this cabinet. This is used when two complete SMs are equipped in one cabinet. (NOTE: The list number given specifies the fusing required to support this option - it does not require that this second MCTU2/MCTU3 be equipped.) (NOTE: SMTYPE must be HSM or LSM for two SMs per cabinet.)	J5D003L-1, LBY
Non-SM-2000	40000	Indicates (SMP23/MCTU3) core board is equipped with 32MB of on-board memory.	
Non-SM-2000	80000	(5E10) Indicates MCTU3 core board is equipped with 64MB of on-board memory.	
Non-SM-2000	c0000	(5E10) Indicates MCTU3 core board is equipped with 96 MB of on-board memory.	
Non-SM-2000	1000000	(5E10) Provides APR (Auto Power Recovery) for the service group (to be or'd). UN516B plus wiring.	J5D003LA-1, LDB with LWC.
Non-SM-2000	2000000	(5E10) Indicates SMP23CDMX. Used in combination with DGVSMP12, DGVSMP23, DGV32MEGMEM, DGVPRTI to indicate that the MCTSI is equipped with a TN1423 processor core board which has 32MB of on-board memory, has an extended memory capacity of up to 52MB, has expanded update address bus cable set, and a TN1408(B) memory controller. The TN1418 bootstrapper is required for this configuration.	TN1408(B) indicates ED5D133-20, ED5D715-30, 31. Update Bus Cable Set indicates ED5D647-25, G5.
Non-SM-2000	4000000	(5E9(2)) TN1838 - Clock Sync. Circuit and UN362 Ethernet Interface Board for the Administrative Work Station.	J5D003LA-1, L28 or 28A and L29, respectively
Non-SM-2000	10000000	UN395B pack to be used as a PI1 in a PSU1 or as a PI2 in a PSU2. Replaces 395 which is only used as a PI2 in a PSU2.	J5D003EC, L51B, J5D003LA, L41B, L43B, LEA, J5D003NA, L17B, L514B, J5D003LB, L8A
Non-SM-2000	20000000	(5E10) Indicates the MCTU3 core board has the version of firmware that allows use with a CM1. KBN20B (32MB), KBN21B (64MB), or KBN22B (96MB).	J5D003LB-1

NOTE: The only valid bits for SM-2000 are: 0, 1, 2, 3, 6, and 28; either bit 0 or 1 must be set, but not simultaneously; the IMPU CLI 0/1 bit 1 cannot be set and bit 0 must be set for SM-2005; bit 2 cannot be set. Reference: ODA error message CLI338a,b,and

c, respectively.				
	SM-2000	00	(5E9(2)) SM-2000 Release 1, UN540 MCTSI, SMPU4. Not valid for "SM2005".	J5D003NA-1, L1A & L2A
	SM-2000	02	(5E10) MCTSI equipped with UN540B SMP SM-2000 circuit pack. Not valid for "SM2005".	J5D003NA-1, L7D, 506A
	SM-2000	05	(5E10) MCTSI equipped with UN560 Enhanced SMP core processor board with 64MB of on-board memory.	J5D003NA, L25,523 (GPI)
	SM-2005	00	(5E11) SM-2000 Release 2, MCTSI, SMPU5. NOTE: Bit 0 must be set; bit 1 and 2 are not allowed. (Reference: ODA error message CLI338c, 5E12 and later.)	J5D003NG-1
	SM-2000	45	(5E11) MCTSI CORE60 (MM), 64-Mbyte on-board memory UN594.	J5D003NA-1, L31
	SM-2005	49	(5E11) MCTSI CORE60 (MM), 128-Mbyte on-board memory UN588.	J5D003NG-1, L25
BRD CLI		200	(5E5) This memory board is a 4-Mbyte TN1374.	J5D003LA-1, L6
		4000	(5E5) This memory board is a 8-Mbyte TN1376.	J5D003LA-1, L19
		20000	(5E6) This memory board is a 16-Mbyte TN1661.	J5D003LA-1, L23
	SM-2000 SM-2005	02	(5E9(2)) SM-2000, Release 1. This memory board is a 32-Mbyte TN1685.	J5D003NA-1, L9B
	SM-2000 SM-2005	04	(5E10) SM-2000. This memory board is a 64-Mbyte TN1806	J5D003NA-1, L24
	SM-2000 SM-2005	08	SM-2000, This memory board is a 128-Mbyte TN1816	J5D003NA-1
DLI (Remote)		00	Earlier vintage DLI (TN877) with SN412.	J5D003AT-1, L1+L4 w/o L7, LWA
		01	5E2 DLI or RLI with power monitor feature as unit type SMSMP20 or RSM with TN1077B,	J5D003LA-1, L7
			or as unit type SMIMPU3,	J5D003EC-1, L1
			or earlier vintage DLI with SN516.	J5D003AT-1, L7 + LWA
		02	4-link RLI without timeslot switches.	J5D003AT-1 w/o L4 or J5D003EC-1 w/o L2 or J5D003LA-1 w/o L12
			FOR TN1077 TYPE BOARDS:	
		05	(5E3-5E9(1) only) TN1077B-E type DLI (needed for 5E3 ORM).	J5D003EC-1, L21 or J5D003LA-1, L7, 7A-7C
		08	(5E5) TN1077B type DLI with timeslot select switches connected to an AKM3 type OLI board on a TRCU version 2. Valid with either J5D003EC-1,L1+L2+L21E or J5D003LA-1,L7+L12	J5D003ED-2,L5
		200	(5E10) for TN1077C, CEPT voltage compliant DLI.	J5D003EC-1,L21A J5D003LA-1,L7A
		800	(5E9(2)) TN1077F type DLI. Required only for External Timing Interface in the ORM and VCDX. Backward compatitible with TN1077A-E. The TN1077F can be used in	J5D003LA-1, L7+L12 or J5D003EC-1, L1+L2 +L21E

			an LSM, HSM, ORM, and TRM and with earlier vintage DLI with SN516 or SN412 (referenced above). DO NOT SET THIS CLI IF THE CABLE GROUPS ARE NOT EQUIPPED.	
	SM USAGE = non "ORM" or "RSM"	800200	(5E10) Non-SM-2000 for TN1077D, EMC compliant	J5D003EC-1,L21B J5D003LA-1,L7B
	SM USAGE = non "ORM" or "RSM"	800600	(5E10) Non-SM-2000 for TN1077E, DLI with CEPT, EMC and APR .	J5D003EC-1,L21C J5D003LA-1,L7C
			FOR OLI TYPE BOARDS:	
NOTE: For 5E11 and earlier, DLI CLIs for OLI boards are equipped on the EQIM form. For 5E12 and later, this function is moved to the EQTRCUPTH form.				
		08	(5E5) AKM3 type OLI board on a TRCU version 2. Valid with either [J5D003EC-1,L1 + L2 + L21E] or [J5D003LA-1,L7 + L12].	J5D003ED-2, L5
		10	(5E5) Equipped with 16E type OLI board on a TRCU Version 2.	J5D003ED-2,L6
		10	(5E8) Equipped with 16E-2 (replaces L6) type OLI board on TRCU Version 2.	J5D003ED-2, L11
		10	(5E5) Equipped with 16F type OLI board on TRCU Version 2.	J5D003ED-2, L7
		20	(5E8) Equipped with 16F-2 (replaces L7) type OLI board on a TRCU Version 2.	J5D003ED-2, L12, L12A
		80	(5E5) Equipped with 16G type OLI board on a TRCU Version 2.	J5D003ED-2, L8
		80	(5E8) Equipped with 16F-2 (replaces 16G) type OLI board on a TRCU Version 2.	J5D003ED-2, L12
		100	(5E5) Equipped with 16K type OLI board on a TRCU Version 2.	J5D003ED-2, L9
			FOR FIU BOARDS:	
		40	5E4(2) for RLI with an FIU equipped with TN1510 (replaces 2 TN834 packs and a TN835). (5E3) with Software Update (88-0088) installed. (5E2) with Software Update (8800-95) installed.	J5D003AP-3, L7
		400	(5E5) For FIU equipped with TN1802 rather than TN619 for use when interfacing DLTU2 (J5D024AA-1 rather than DLTU (J5D003AA-1).	J5D003AP-3, L10
LDSU		00	(5E2) Equipped with MC5D073A1/TN833 DSU2 common board.	J5D003EA-1, L1+L2
		00	For TN128 pack. DSU Model 1.	J5D003AE-1, L1
		01	(5E3) Equipped with MC5D085A1/TN833 DSU2 common board.	J5D003EA-1, L1+L3 or J5D003LA-1, L10
		03	5E4(2) Equipped with MC5D140A1/TN1637 DSU2 common board in a DSU model 1 unit.	J5ED003AE-1, L17
		800009	(5E10) Equipped with TN833C/MC5D085A1C, pumpable and APR.	J5D003EA-1, L4B, L8A, L11A, L14A, L19A, L24A
		800019	(5E12) Equipped with TN1890, TDSC4 pumpable and APR, replaces TN833.	

Copyright © 2006 Lucent Technologies

			NOTE: If DSU on EQDSP form = 0, CLI values must be 0 or 1. If DSU = 0 on the EQDS2P form, CLI values must be 0, 1, 3, 800009, or 8000019.	
BSTR		00	For current production, TN878.	J5D003EC-1, L1 or J5D003LA-1, L5, J5D003AT-1 and J5D003AY-1
		01	5E10 Fast pump bootstrapper, TN1418 NOTE: BTSR cli value for the SMSMP20 and SMMCTU3 need to be populated to DGVNULL even though they do not support a bootstrapper pack.	ED5D715-30, G10

Figure 1 EQIM Form - Div. 8, Sec. 2

FIELD NAME	DEPENDENCIES	CLI (Hex)	DESCRIPTION	J-DRAWING
LINK INTERFACE UNIT CLI		00	Applicable only to an ONTC of CM1 vintage.	J5D006AB-1, L1 or L2 or L3 or L4 or L5 or L6
MESSAGE INTERFACE UNIT CLI		00	For current production.	J5D006AA, L1 and L2
		400	(5E10) SN516B C/D with APR for CM2(C) only. APR only available in CM2(C). Backwards compatible with SN516.	J5D020A-1, L46B, L50, L51; J5D020A-2, L1H

NOTES:

When bit number 10 is set for the MIU CLI (where bits are numbered from 0 to 31 and bit 0 is the right most bit), CM VINTAGE on the EQCORE form mut be 2.

When an office has APR, all CM2(C) until/circuit CLI's must have the APR bit(s) set, including MI, NC2, and TMS CLI's and all PC CLI's.

NETWORK CLOCK UNIT CLI	NOTE: The values listed for the Network Clock Unit CLIs are bitwise assignments. For a combination of hardware, the values must be "OR"ed together to get the actual CLI value.			
	AUTO SYNC = N OSC TYPE = "DOMMED"	00	CM2 Medium Stability Controller, MC5D215A1.	J5D020A-1, L3, L3A, L23, L23A
	AUTO SYNC = Y OSC TYPE = "DOMMED"	80	CM2 Medium Stability Controller, MC5D215A2.	J5D020A-1, L3B, L5B, L7B, L23B, L24B, J5D020A-2, L9, L10
	CLOCK TYPE = "24CHAN2" AUTO SYNC = N OSC TYPE = "DOMHI"	08	CM2 High Stability Controller, MC5D222A1.	J5D020A-1, L4, L4A, LCC
	CLOCK TYPE = "24CHAN2" AUTO SYNC = Y OSC TYPE = "DOMHI"	88	CM2 High Stability Controller, MC5D222A2.	J5D020A-1, L4B, L6B, L8B J5D020A-2, L7, L8
		00	CM2 Medium Stability Oscillator, TN1286B.	J5D020A-1, L3B, L23B, J5D020A-2, L10
		08	CM2 High Stability Oscillator, TN1284B.	J5D020A-1, L4B,

Copyright © 2006 Lucent Technologies

				J5D020A-2, L8
		00	CM2 24 Channel Synchronization Board, TN1274B.	J5D020A-1, L3B, L4B, L5B, L6B, J5D020A-2, L5
		80	CM2C Medium Stability Controller, MC5D215A2.	J5D020AJ-5, L15A
	CM2 Compact? must be Y ECDOPT.CM TYPE MUST BE "CM2C" CLOCK TYPE = "24CHAN2" AUTO SYNC = Y OSC TYPE = "DOMHI"	88	CM2C High Stability Controller, MC5D222A2.	J5D020AJ-5, L16A
		00	CM2C Medium Stability Oscillator, TN1286B.	J5D020AJ-5, L9
		08	CM2C High Stability Oscillator, TN1284B.	J5D020AJ-5, L11
		00	CM2C 24 Channel Synchronization Board, TN1274B.	J5D020AJ-5, L13
		20	CM1 with NC2 (MICU2).	J5D006C-1
		28	5E2 CM1 w/MICU2 and Domestic High Stability 24-channel Reference Network Clock 2 (TN1274B, TN1284)	J5D006C-1, L16
		20	5E2 MICU2 in CM1 with domestic Network Clock 1.	J5D006C-1, L13 w/o L14 or LAH
		21	5E2 MICU2 in CM1 with stand-alone clock (TN249).	J5D006C-1, L14 or LAH
		00	MICU1 in CM1 with domestic Network Clock 1.	J5D006C-1, L3 or L7
		01	No external system clock reference connected, stand-alone clock board (TN249) required.	J5D006C-1, L1 w/o L3 or L7
		102	5E10 for SN516B; backwards compatible with SN516 and APR.	J5D003AT-1, L7A J5D003EC-1, L1B

NOTE: For 5E15 and later, with the introduction of the CM3 (Global Message Server), the TMS (Time Multiplex Switch) CLI information was moved from the EQCORE form to the EQTMS form..

Figure 2 EQCORE Form - Div. 8, Sec. 3

FIELD NAME	DEPENDENCIES	CLI (Hex)	DESCRIPTION	J-DRAWING
CLI		00	For current production FPC (Foundation Peripheral Controller) and PPC (Pump Peripheral Controller) with CM2.	J5D020AB-1, L1A
		00	For current production MMP with CM1.	J5D006AD-1, L6 or L3
		00	For current production MMP (Modular Message Processor) with CM2.	J5D020AC-1, L1A or L2A or L4A
		00	(5E9(2)) SM-2000, QLPS Gateway Processor, TN1683, PC 32 and 33 only.	J5D020A-2, L38 + J5D020A-1, L40
NOTE: The CMP is not required to be transatable at the ODA form level; Recent Change		00	For CMP/CM2 (5E6 and later Software Releases).	J5D006AF-1, L1 or L2A orL3

only.		04	For current production CMP/CM1 (5E5 to 5E6 Retrofit Procedure).	J5D006AD-1, L8
		00	For current production CMP/CM1 (5E6 and later Software Releases).	J5D006AD-1, L8
		02	For current production CMP/CM1 with one TN1871 and one TN1369 (replaces TN1368).	J5D006AD-1, L8D
NOTE: In ODA, this CLI is translated using the EXPANDED CMP/APR field on the EQCORE form (5701 Record); Recent Change View 17.14		01	5E13 and earlier: For current production CMP/CM2 with one TN1800 Memory Board and one TN1369 (replaces TN1368).	J5D020AF-1, L4 or J5D020AF-2, L5
NOTE: For 5E14 and later, see the NUMBER OF MEM BOARDS field on the EQCORE form.		05	5E13 to 5E14 retrofit and later: TN1800, plus 2 TN1369s. **NOTE: Two TN1369s are required to retrofit to 5E14.**	J5D020AF-2, L1A, L2B, L5A, L8
		0d	5E14 and later: TN1800 plus 3 TN1369s (for future use).	J5D020AF-2, L1A, L2B, L5A, L8
	CM VINTAGE = 2	400	For current production CMP/CM2 and APR, SN516B/C/D.	J5D020A-1, L46B, L50, L51, J5D020A-2, L47, L1H
		NOTE: When CM VINTAGE on the EQCORE form is 2, the correct CLI values are 0, 5, d, 400, 405, or 40d (when bit 10 is set and where the bits are numbered from 0 to 31 and bit 0 is the right most bit).		

Figure 3 EQPC Form - Div. 8, Sec. 5

FIELD NAME	DEPENDENCIES	CLI (Hex)	DESCRIPTION	J-DRAWING
ASC/RAU CLI	If ALARM TYPE = "RAU"	00	For TN934 alarm circuit.	J5D005AD-1
	If ALARM TYPE = "ASC"	00	For ED5D587 alarm circuit.	ED5D586-10

Figure 4 EQRAU Form - Div. 8, Sec. 7

FIELD NAME	DEPENDENCIES	CLI (Hex)	DESCRIPTION	J-DRAWING
COMMON BOARD		01	5E2 and later for LU2 with TN842B (required for TN1048, TN1058 or TN1561 grid bds).	J5D004AC-2, L5+LP
		01	LU3 with domestic version common board (UN322) for 5E3 and later.	J5D004AD-1, L1
		00	LU and early LU2 with TN842.	J5D004AC-1, L1 or J5D004AB-1 (old LU)
CHANNEL CIRCUIT		00	LU, LU2, LU3, for TN335, TN335B, TN335C, TN335D, TN335E, etc. channel pack.	J5D004AC-1 J5D004AD-1 LBG, LBH or L1 or

				J5D004AC-2, LBR or J5D004AB-1 (old LU)
CHANNEL BOARD		00	LU, LU2, LU3, for TN335, TN335B-E, etc. channel pack.	J5D004AC-1 J5D004AD-1, LBG, LBH or L1 or J5D004AC-2, LBR or J5D004AB-1
		00	LU3 SM; SM-2000 for TN335E.	J5D004AD-1, LBG, LBH
HLSC(SG_,PK_)		02	LU2 equipped with MC5D045-A4D pack needed to support Distinctive Ringing in 5E2 or later. NOTE: With 5E2, the -A4D pack requires Software Update (91-0002)	J5D004AC-2, L30A, L31A or L32A
		02	LU2 equipped with MC5D045-A3 pack needed to support Distinctive Ringing in 5E2 or later.	J5D004AC-2, L30, L31 or L32; or J5D004AC-1, LB or LC
		01	LU2 equipped with MC5D045-A2 pack needed to support Multi-frequency ringing.	J5D004AC-2, L27, L28, or L29
		00	LU2 equipped with MC5D045-A1 pack.	J5D004AC-2, L24, L25, or L26; or J5D004AC-1, L1 or L4
		02	LU3 for MC5D045-A4D on TN844, TN844B or TN844C HLSC. NOTE: With 5E2, the -A4 pack requires Software Update (91-0002)	J5D004AD-1, L45A or L46A or L47A
		02	LU3 for MC5D045-A3 on TN844 or TN844B HLSC.	J5D004AD-1, L45 or L46 or L47
	LINE UNIT = 7	02	5E9(2) LU3 with SM-2000 for 4AD1.	J5D004AD-1, L45 or L46 or L47 or L48
		00	TN844D, MC5D097A2D	J5D004AG-1,L3C
		B83	TN844E, MC5D097A3E	J5D004AL-1,L23
	LINE UNIT TYPE = 4AD1	1002	TN844E, MC5D194A1Rural Electrification Administration.	J5D004AD,L6,6A,6B, 9,9A,518
	LINE UNIT TYPE = 4AD1	2002	TN844E, MC5D195A1Rural Electrification Administration.	J5D004AD,L7,7A, 7B,10,10A,519
	LINE UNIT TYPE = 4AD1	3002	TN844E, MC5D196A1Rural Electrification Administration.	J5D004AD,L8,8A, 8B,11,11A,520
GDX ACCESS CKT	LINE UNIT TYPE = "4AC1" or "4AD1"	00	For current TN831/TN832.	J5D004AC-2, L5 or J5D004AD-1, L1, or J5D004AC-
	LINE UNIT TYPE = "4AD1"	01	5E10 for TN831B and TN832B CEPT.	J5D004AC-1, LZ, J5D004AC-2, LCA
	LINE UNIT TYPE = "4AD1"	03	5E10 TN831C and TN832C CEPT, and APR.	J5D004AC-2, LCM and J5D004AC-2, LCL, J5D004AD-2, L1F, LF
900 OHM TEST		00	For LU, LU2, and LU3.	Not applicable.
600 OHM TEST		00	For LU2 and LU3.	Not applicable.
2K OHM TEST		00	For LU, LU2, and LU3.	Not applicable.
LINEARIZATION		00	For LU, LU2, and LU3.	Not applicable.
LU GRID (x)	LINE UNIT TYPE = "4AC1"	00	LU equipped with TN838 grid board.	J5D004AC-2, L9, 10 or 11; or J5D004AC-2, L1, 2 or 3
	LINE UNIT TYPE =	01	LU2 or LU3 equipped with TN1048 grid	J5D004AC-2, L15, 16

"4AC1"		board.	or 17; or J5D004AD-1, L17, 18, 19, 20
LINE UNIT TYPE = "4AC1"	02	LU2 or LU3 equipped with TN1058 (or TN1058B, etc.) grid board.	J5D004AC-2, L12, 13, 14 33, 34 or 35; or J5D004AD-1, L21, 22, 23, 24, 25, 26, 27 or 28
LINE UNIT TYPE = "4AD1"	10	5E10 for TN1058C with APR.	J5D004AC-2, L33A, L34A, L35A, J5D004AE-1, L64A, L65A, L66A, J5D004AD-2, LIF, L5A, LF

Figure 5 EQLUP Form - Div. 8, Sec. 10

FIELD NAME	DEPENDENCIES	CLI (Hex)	DESCRIPTION	J-DRAWING
CONTROL/DATA CIRCUIT CLI (EQTU)		00	Equipped with SN101 and SN101B	J5D003AC-1, LF or LG
TEST ACCESS CIRCUIT CLI (EQTU)		00	Equipped with SN100	J5D003AC-1, L1
CLI (EQTUP)		00	Equipped with SN102,TRKLO	J5D003AC-1, L3
		00	Equipped with SN103,TRKLI	J5D003AC-1, L4
		00	Equipped with SN103B,TRKLI	J5D003AC-2, L3A
		00	Equipped with SN104,TRK4EM	J5D003AC-1, L5
		00	Equipped with SN105,TRK2EM	J5D003AC-1, L6
		00	Equipped with SN107,TSTTRK NOTE: For CIRCUIT TYPES: TRKLO, TRKLI, TRK2EM, TRK4EM, TRKTST, TKLOTOL, TKLITOL, TK2ETOL, or TK4ETOL, CLI must be 00.	J5D003AC-1, L7

Figure 6 EQTU, EQTUP Forms - Div. 8, Sec. 13

FIELD NAME	DEPENDENCIES	CLI (Hex)	DESCRIPTION	J-DRAWING
CLOCK CLI	If OSCILLATOR TYPE = "DOMMED"	00	Standard Domestic Remote Clock Controller, Medium Stability MC5D215A1 or MC5D215A2.	J5D003FC-1, L1 or LK, respectively.
		00	Medium Stability Oscillator, TN1286B.	J5D003FC-1, L2A
		00	TN1274B 24 Channel Synchronization Board.	J5D020A-1, L5A or LA
		102	5E10 for SN516B; backwards compatible with SN516 and APR.	J5D003AT-1, L7A, J5D003EC-1, L1B

Figure 7 EQRCLK Form - Div. 8, Sec. 16

FIELD NAME	DEPENDENCIES	CLI (Hex)	DESCRIPTION	J-DRAWING
CLI		00	HDFIs and RDFIs may use ANN5.	J5D003AD-1, L4
		01	CDFIs, HDFIs and RDFIs may use the ANN5B or ANN5C Circuit Pack. 5E5 and later Software Releases.	
		00	Equipped with ANN1.	J5D003AD-1, L2

Copyright © 2006 Lucent Technologies

	03	Equipped with ANN3B/ANN3C.	J5D003AD-1, LH, L7
If DFI USAGE = "H1"	00	For DSI (24-ch. Mu-law) type TN1306/TN1304 (remote) RISLU link pair.	J5D003FF-1, L2 and L4
	08	5E10 SN730 (Power Start), DLTU2 and DLTUR with APR (to be or'd)	J5D003FF, LAF, J5D024AA-1, L7
	800003	5E10 TN1305B/TN1307B, A-law (30 Ch.) DFI Link Pair (H1R1). CEPT and EMC compliant.	
If DFI USAGE = "H2"	00	For DSI (24-ch. Mu-law) type TN1311/TN1309 RISLU link pair	J5D003FF-1, L3 and L5
	00	(5E5) For all DFI-2 board types for current production (TN1611 - MC5D223A1 or TN1612 - MC5D224A1)	J5D024AA-1, L2 and L3
	NOTE: If FAC IND = 1 or 3, CLI value must be 0, 1, 8, or 9.		

Figure 8 EQDUP Form - Div. 8, Sec. 17

FIELD NAME	DEPENDENCIES	CLI (Hex)	DESCRIPTION	J-DRAWING
COMMON CONTROL CLI		00	For current production.	J5D004AG-1, L1
COMMON DATA CLI		00	For current profuction.	J5D004AG-1, L1

Figure 9 EQISLU Form - Div. 8, Sec. 18

FIELD NAME	DEPENDENCIES	CLI (Hex)	DESCRIPTION	J-DRAWING
COMMON CONTROL CLI		00	For current production.	J5D004AG-1, L1
COMMON DATA CLI		00	For current production.	J5D004AG-1, L1
REMOTE CLOCK CLI		00	For RISLU equipped with TN1319 stratum 4 clock board.	J5D003FF-1, L10

Figure 10 EQRISLU Form - Div. 8, Sec. 19

FIELD NAME	DEPENDENCIES	CLI (Hex)	DESCRIPTION	J-DRAWING
CLI		00	For KCD2	J5D004AK-1, L6, F, H, K, M
		01	For LGP 553A	J5D004AK-1, L27, P, Q, R, S
		02	(5E4(2) and later) for LGP 553B Power Circuit Pack NOTES: 5E4(2) requires Software Update (91-0003) and 5E5 requires Software Update (91-0008) For 5E9(1) and later, when ANSI U cards are defined on the ISLULC form, the CLI must be 02.	J5D004AK-1, L31, AK, AL, AM, AN, 6A

Figure 11 EQLGC Form - Div. 8, Sec. 20

FIELD NAME	DEPENDENCIES	CLI (Hex)	DESCRIPTION	J-DRAWING
DSU COMMON CIRCUIT CLI (EQDS form)		00	For TN128 pack.	J5D003AE-1, L1
		03	Equipped with MC5D140A1/TN1637 DSU2 (5E4(2)) common board in a DSU model 1	J5D003AE-1, L17

Copyright © 2006 Lucent Technologies

			unit	
		01	Equipped with MC5D085A1/TN833 DSU2 common board	J5D003EA-1, L1 + L3 or J5D003LA-1, L10
		00	Equipped with MC5D0873A1/TN833 DSU2 common board	J5D003EA-1, L1 + L2
CLI (EQDSP)	If PACK TYPE = "UTG"	01	For TN892 rather than TN132	J5D003AE-1, L8 or L15
	If PACK TYPE = "UTG"	00	For earlier vintage with TN132 board	J5D003AE-1, L3
	If PACK TYPE = "UTD2"	00	For TN130 pack	J5D003AE-1, L4 or L13
	If PACK TYPE = "UTD4"	00	For TN133 pack	J5D003AE-1, L9, L14, L9 and LK, or L14 and LL
	If PACK TYPE = "RVPT"	00	For MC5D068A1 (TN853)	J5D003AE-1, L11
	If PACK TYPE = "TTFPROC"	01	Equipped with MC5D214-A1 (or later) version of TN305 (CN6657)	J5D003AE-1, L6
		00	Early version TN305 (w/o CN6657) non-production.	
	If PACK TYPE = "TTFRESP"	01	For current production HW with TN304B rather than TN304.	J5D003AE-1, LE
		00	For earlier vintage TTF equipped with TN304.	J5D003AE-1, L6
	If PACK TYPE = "TTFINTF"	00	For current production.	J5D003AE-1, L6
	If PACK TYPE = "TTFTGEN"	00	For current production.	J5D003AE-1, L6
	If PACK TYPE = "CONF2"	00	For TN234 vintage UCC.	J5D003AE-1, L5
	If PACK TYPE = "CONF5"	01	For current production (TN841).	J5D003AE-1, L10
	If PACK TYPE = "UCC1032"	00	For current production (TN1032).	J5D003AE-1, L12
CLI (EQDS2P)	If TYPE = "LDSU2TG"	00	For current production.	J5D003EA-1, L1
CLI (EQDS2P)	If TYPE = "LDSU2TD"	00	For current production.	J5D003EA-1, L1
CLI (EQDS2P)	If TYPE = "LDSU2TX"	00	For current production.	J5D003EA-1, L1
CLI (EQDS2P)	If TYPE = "LDSU2CTD"	00	For current production.	J5D003JA

Figure 12 EQDS, EQDSP, and EQDS2P Forms - Div. 8, Sec. 21

FIELD NAME	DEPENDENCIES	CLI (Hex)	DESCRIPTION	J-DRAWING
COMMON	PSU TYPE =	00	For TN1082/MC5D102A1, Control Fanout	J5D003BL-1, L5

Copyright © 2006 Lucent Technologies

CONTROL CLI	"PSU1"			
	PSU TYPE = "PSU1"	01	For PSIU equipped with Enhanced B-channel Packet Service	J5D003BL-1, L11
	PSU TYPE = "PSU1"	800004	UN192/MC5D124A1B circuit pack TN1082B/MC5D102A1B, Control Fanout with APR.	
	PSU TYPE = "PSU1"	800006	TN1082B/MC5D123A1B, with FLEX and APR.	J5D003BL-1, LBJ
	PSU TYPE = "PSU2"	00	5E10. For TN1843	J5D003BY-1, L2
SHLF CLI		00	For production PSIU.	J5D003BL-1, L5
		00	5E10. For production PSIU with UN192 (MC5D124A1) with DF-FLEX.	J5D003BL, L11
	PSU TYPE must be "PSU2"	03	5E10. For UN399 Data Fanout with Multiple PIDBs, DF-MP circuit board.	J5D003BL-1, L14
	PSU TYPE must be "PSU2"	800006	5E10. For UN192B/TN1083C/MC5D124A1B PSU Shelf with DF-FLEX, APR.	J5D003BL-1, L11B, J5D003BL-1, L3B
	PSU TYPE must be "PSU2"	800007	5E10. For UN348B - Data Fanout with Mulitple PIDBs and APR.	J5D003BL-1
	PSU TYPE must be "PSU2"	104	5E12. For UN592 Data Fanout (DF2). Supports PCT link and APR.	J5D003BY-1, L14, L15, L106
		304	5E14. DF2 UN592B, supports APR.	J5D003BY-1,L14B

Figure 13 EQPSU Form - Div. 8, Sec. 22

FIELD NAME	DEPENDENCIES	CLI (Hex)	DESCRIPTION	J-DRAWING
PROTOCOL HANDLER CLI		00	5E4(2). For production 1-Megabyte TN1366 protocol handler (type PH1). (For lab test only.)	J5D003BL-1, L5
	PSU TYPE must be "PSU2"	01	5E10. TN1844 (type PHV1).	J5D003BY-1
	PSU TYPE must be "PSU2"	02	5E10 TN1856 (type PHV2).	J5D003BY-1
	PSU TYPE = "PSU2"	04	5E12 For TN1862 (type PHV3).	J5D003BY-l, L13
	PSU TYPE = "PSU2"	08	5E12 For TN1863 (type PHV4).	J5D003BY-l,, L16B
	PSU TYPE must be "PSU2"	10	5E10. TN1845 (type PHA1).	J5D003BY-1
	PSU TYPE = "PSU1"	100	For production 1-Megabyte TN1081 protocol handler (type PH2).	J5D003BL-1, L6
	PSU TYPE = "PSU1" or "PSU2"	a00	For production 4-Megabyte TN1367C protocol handler (type PH3APR).	J5D003BL-l , L12D J5D003BY-1, L11
	PSU TYPE must be "PSU2"	20	5E16.1 For TN1891 (type PHV5)	
		40	5E18.1 for TN1892 (type PHV6)	J5D003BY-1
	PSU TYPE = "PSU1" or "PSU2"	200	For production 4-Megabyte TN1367 protocol handler (type PH3).	J5D003BL-l, L12B
	PSU TYPE = "PSU1" or "PSU2"	1800	5E10 3-Megabyte TN1846 (type PH4).	J5D003BL-1, L15A (PSU1) J5D003BY-1, L5 (PSU2)
	PSU TYPE "PSU1" or "PSU2"	2800	5E13 16-Megabyte TN1873 (type PH22)	(being researched)
		8800	5E16(1) For TN13 (type PH31)	
		10000	5E16(1) For TN113(=PH33 + LLE1 paddle	J5D003BY-1,L22

Copyright © 2006 Lucent Technologies

		20000	board) (type PHA2) 5E16(1) For TN13(=PH30 + LLE2 paddle board) (type PHE2)	J5D003BY-1,L20

Figure 14 EQPSUPH Form - Div. 8, Sec. 23

FIELD NAME	DEPENDENCIES	CLI (Hex)	DESCRIPTION	J-DRAWING
CLI	If CIRCUIT PACK TYPE = "ISRG"	00	For TN1347 20HZ ringing generator board.	J5D004AG-1, L4
	If CIRCUIT PACK TYPE = "ISRG"	00	For TN1347B 20HZ ringing generator board.	J5D004AG-1, L4A
	If CIRCUIT PACK TYPE = "ISRG"	01	For TN1384 25HZ ringing generator board.	J5D004AG-1, L6
	If CIRCUIT PACK TYPE = "ISRG"	01	For TN1384B 25HZ ringing generator board.	J5D004AG-1, L6A
	If CIRCUIT PACK TYPE = "ISMAN"	00	For production TN1348 pack.	J5D004AG-1, L5
	If CIRCUIT PACK TYPE = "ISHLSC"	00	For production MC5D097A1/TN844B pack.	J5D004AG-1, L3
	If CIRCUIT PACK TYPE = "ISHLSC"	00	For production MC5D097A1C/TN844C pack.	J5D004AG-1, L3A
	If CIRCUIT PACK TYPE = "ISHLSC"	00	For production MC5D097A2C/TN844C pack.	J5D004AG-1, L3B
	If CIRCUIT PACK TYPE = "ISHLSC"	00	For production MC5D097A2D/TN844D pack.	J5D004AG-1, L3C
	If CIRCURIT PACK TYPE = "ISHLSC"	B83		J5D004AL-1, L23

Figure 15 EQISAP Form - Div. 8, Sec. 24

FIELD NAME	DEPENDENCIES	CLI (Hex)	DESCRIPTION	J-DRAWING
CLI	If TYPE = "MACC"	00	Metallic Access Pack (TN138)	J5D003BD-1, L3 or L10
	If TYPE = "ALIT"	00	Equipped with TN329 or TN329B for medium humidity application.	J5D203BD-1, L8 or LJ
	If TYPE = "ALIT"	01	Equipped with TN328 or TN328B for high humidity applications.	J5D003BD-1, L9 or LK
	If TYPE = "ALIT"	02	Equipped with TN330 or TN330B for low humidity applications.	J5D003BD-1, L7 or LH
CLI	If TYPE = "DIST"	00		J5D003BD-1, L5
	If TYPE = "SCAN"	00		J5D003BD-1, L4
	If TYPE ="GDXC"	00		J5D003BD-1, L6
	If TYPE = "DFTC"	00		J5D003BD-1, L11
	If TYPE = "SLIM"	00	5E10 TN1422.	J5D003BD-1, L20
MTIB PACK CLI		00	(Same as TN138 metallic access.)	J5D003BD-1, L10
MSU COMMON CIRCUIT CLI		00	Equipped with TN879 Common Board.	J5D003BD-1, L1 + L2
		01	Equipped with TN879B Common Board.	J5D003BD-1, L1 + L2 + LL

Figure 16 EQMSU, EQMSP, and EQMMSP Forms - Div. 8, Sec. 25

FIELD NAME	DEPENDENCIES	CLI (Hex)	DESCRIPTION	J-DRAWING
DCTU CLI		00	For current production.	J1P023AM-1, L1

Figure 17 EQDCTU Form - Div. 8, Sec. 26

FIELD NAME	DEPENDENCIES	CLI (Hex)	DESCRIPTION	J-DRAWING

PMU CLI		00	For current production.	J1P023AM-1, L1, L2, L3

Figure 18 EQPMU Form - Div. 8, Sec. 27

FIELD NAME	DEPENDENCIES	CLI (Hex)	DESCRIPTION	J-DRAWING
EQUIPMENT CNI		00	For FIU with 24-channel links with ANN5 boards.	J5D003AD-1, L4 or L5
CC CLI		00	For current production.	J5D004AG-1, L1
CD CLI		00	For current production.	J5D004AG-1, L1
CLI		00	For current production.	

Figure 19 EQFIU Form - Div. 8, Sec. 28

FIELD NAME	DEPENDENCIES	CLI (Hex)	DESCRIPTION	J-DRAWING
COMMON CONTROL CIRCUIT		00	For current production.	J5D003AR-1; J5D003AR-2, L4; J5D003AS-2, L4
CLI		00	For current production.	J5D003AR-1

Figure 20 EQDCLU and EQDCLP Forms - Div. 8, Sec. 30

FIELD NAME	DEPENDENCIES	CLI (Hex)	DESCRIPTION	J-DRAWING
		NOTE: For 5E9(2) and later, TRC CLIs for the following OLI boards are equipped on the EQTMSLINK form.		
TRC CLI (Host)		00	(5E3) For TRCU1 Unit.	J5D003ED, L1 or L2
		01	(5E5) For AKM3 OLI Board.	J5D003ED-2, L5
		02	(5E5) For 16E OLI Board.	J5D003ED-2, L6
		02	(5E8) For 16E-2 (replaces L6) OLI Board.	J5D003ED-2, L11
		04	(5E5) For 16F OLI Board.	J5D003ED-2, L7
		04	(5E8) For 16F-2 (replaces L7) OLI Board.	J5D003ED-2, L12
		08	(5E5) For 16G OLI Board.	J5D003ED-2, L8
		10	(5E5) For 16K OLI Board.	J5D003ED-2, L9

Figure 21 EQORMLINK Form - Div. 8, Sec. 33

FIELD NAME	DEPENDENCIES	CLI (Hex)	DESCRIPTION	J-DRAWING
COMMON CONTROL CLI		00	Not Used.	
MAIL BOX CIRCUIT CLI		00		J5D003EA-1, L4
RECORDED ANNOUNCEMENT CLI		00		J5D003EA-1, L4
DIAL THROUGH ANNC CLI		00		J5D003EA-1, L4
CLI	UNIT TYPE = "RAF"	00	5E10 TN833 DSU2-RAF Common Control Circuit.	J5D003EA-1, L24A
	UNIT TYPE = "RAF"	800009	5E10 TN833C pumpable and APR, DSU2-RAF Common Control	J5D003EA-1, L4B, L8A, L11A, L14A,

				L19A, L24A

Figure 22 EQRA Form - Div. 8, Sec. 35

FIELD NAME	DEPENDENCIES	CLI (Hex)	DESCRIPTION	J-DRAWING
CLI		01	(5E3) MC5D087A1 for OSPS Directory Assistance.	J5D003EA-1, L4
		02	(5E4) MC5D114A1 for OSPS Toll and Directory Assistance or OSPS Coin Tone Receiver.	J5D003EA-1, L10
		04	(5E3 with Software Update pending) MC5D114A1 for OSPS 1-800 Directory Assistance	J5D003EA-1, L11
		00	(5E5 and later) For TN1053 (carrier pack) and all subsequent firm-ware versions for OSPS Toll and Directory Assistance,CAS-3.	J5D003EA-1, L21, LF

Figure 23 EQRAP Form - Div. 8, Sec. 36

FIELD NAME	DEPENDENCIES	CLI (Hex)	DESCRIPTION	J-DRAWING
CLI		00	Not used.	

Figure 24 EQISTF Form - Div. 8, Sec. 37

FIELD NAME	DEPENDENCIES	CLI (Hex)	DESCRIPTION	J-DRAWING
NOTE: For 5E12 and later, TRC CLIs previously defined on the EQTMSLINK form (host) are defined on this form. Similarly, EVEN/ODD NLI CLIs (remote) previoulsy defined on the EQNLI form are defined on this form.				
TRCU FIRST PATH HOST CLI		00	(5E3) TRCU version 1	J5D003ED-1, L1 or L2
		01	For AKM3 OLI board	J5D003ED-2, L5
		02	For 16E-2 OLI board	J5D003ED-2, L11
		04	For 16F-2 OLI board	J5D003ED-2, L12, L12A
		08	For 16G OLI board	J5D003ED-2, L8
		10	For 16K OLI board	J5D003ED-2, L9
		00	(5E12) TRCU version 3	unavailable
TRCU FIRST PATH REMOTE CLI		00	(5E3) TRCU version 1	J5D003ED-1, L1 or L2
			(5E8) TRCU version 2:	
		08	For BKD3 type ENLI with timeslot select switches connected to an AKM3 type OLI board	J5D003ED-2, L5
		10	For BKD3 type ENLI with timeslot select switches connected to 16E2 type OLI board	J5D003ED-2, L11, L11A
		20	Same as above except equipped with 16F2 type OLI board	J5D003ED-2, L12, L12A
		80	Same as above except equipped with 16G type OLI board	J5D003ED-2, L8
		100	Same as above except equipped with 16K type OLI board	J5D003ED-2, L9
		00	(5E12) TRCU version 3	unavailable
TRCU NEXT PATH HOST CLI		00	(5E3) TRCU version 1	J5D003ED-1, L1 or L2
		01	For AKM3 OLI board	J5D003ED-2, L5
		02	For 16E-2 OLI board	J5D003ED-2, L11
		04	For 16F-2 OLI board	J5D003ED-2, L12
		08	For 16G OLI board	J5D003ED-2, L8
		10	For 16K OLI board	J5D003ED-2, L9

Copyright © 2006 Lucent Technologies

		00	(5E12) TRCU version 3	unavailable
TRCU NEXT PATH REMOTE CLI		00	(5E3) TRCU version 1	J5D003ED-1, L1 or L2
			(5E8) TRCU version 2:	
		08	For BKD3 type ENLI with timeslot select switches connected to an AKM3 type OLI board	J5D003ED-2, L11
		10	For BKD3 type ENLI with timeslot select switches connected to 16E2 type OLI board	J5D003ED-2, L11
		20	Same as above except equipped with 16F2 type OLI board	J5D003ED-2, L12
		80	Same as above except equipped with 16F2 type OLI board	J5D003ED-2, L12
		100	Same as above except equipped with 16K type OLI board	J5D003ED-2, L9
		00	(5E12) TRCU version 3	unavailable

Figure 25 EQTRCUPTH Form - Div. 8, Sec. 38

FIELD NAME	DEPENDENCIES	CLI (Hex)	DESCRIPTION	J-DRAWING
IDCU CLI		00	(5E8) For 429AA, Power Unit	J5D003FL-1, L2
IDCU CLI		00	(5E8) For KBN6, PIDB Transmission Interface	J5D003FL-1, L3
IDCU CLI		00	(5E8) For UN359, Common Control Processor	J5D003FL-1, L4
SG0/1 CLI; LSI0/1 CLI		00	(5E8) For TN1670, Loop Side Interface	J5D003FL-1, L5
IDCU CLI		00	(5E8) For KBN7, Electrical Line Interface Circuit	J5D003FL-1, L6

Figure 26 EQIDCU Form - Div. 8, Sec. 48

FIELD NAME	DEPENDENCIES	CLI (Hex)	DESCRIPTION	J-DRAWING
CLI		00	Non-broadcast mode (UN71).	J5D003NF-1, L5
		01	5E11, SM-2000 Broadcast mode (to broadcast control signals to all ports) (UN71B/C)	J5D003NF-1, L6

Figure 27 EQCI Form - Div. 8, Sec. 50

FIELD NAME	DEPENDENCIES	CLI (Hex)	DESCRIPTION	J-DRAWING
CLI		00	5E9(2) SM-2000, Release 1, UM73 Data Expansion.	J5D003NB-1, L2A
		10	5E10 SM-2000, TSIU4-2, UN553 Data Expansion. NOTE: For 5E11 and later, for SM-2000, the CLI vlaue must be 10, if bit 4 of the TSICOM 0 CLI/TSICOM 1 CLI is set on the corresponding EQIM form, otherwise the CLI value entered must be 0.	J5D003NB-2, L3
	Non-SM-2000		5E11 CLI must equal the IMPU	

			CONTROLLER 0 or 1 CLI (depending on an MC value of 0 or 1) on the EQIM form.	

Figure 28 EQDI Form - Div. 8, Sec. 51

FIELD NAME	DEPENDENCIES	CLI (Hex)	DESCRIPTION	J-DRAWING
		00	(5E9(2)) SM-2000, KLU1 TSI Slice.	J5D003NB-1, L9A

Figure 29 EQTSI Form - Div. 8, Sec. 52

FIELD NAME	DEPENDENCIES	CLI (Hex)	DESCRIPTION	J-DRAWING
QLI CLI	CM2C = N, SM USAGE = NON-ORM, CM VINTAGE = 2, UNIT TYPE = SM2K; also CM2C = N, SM USAGE = ORM, CM VINTAGE = 2, TRCU3/SM2K	100	(5E9(2)) SM-2000, Release 1, TN1681, Quad Link Interface 2 for TMSU2.	J5D020AG-2, L10
	CM2C = Y	00		
	CMVINTAGE = 3	00		
		00	Equipped with TN888 for non-SM-2000.	J5D020AG-2, L4
TRC CLI		00	(5E3) for TRCU1 Unit.	J5D003ED-1, L1 or L2
NOTE: For 5E12 and later, the TRC CLI function was moved to the EQTRCUPTH form.				
			For TRCU2:	
		02	(5E5) For 16E OLI Board.	J5D003ED-2
		02	(5E8) For 16E-2 (replaces List 6) OLI Board.	J5D003ED-2, L11
		04	(5E5) For 16F OLI Board.	J5D003ED-2, L7
		04	(5E8) For 16F-2 (replaces List 7) OLI Board.	J5D003ED-2, L12
		08	(5E5) For 16G OLI Board.	J5D003ED-2, L8
		10	(5E5) For 16K OLI Board.	J5D003ED-2, L9

Figure 30 EQTMSLINK Form - Div. 8, Sec. 53

FIELD NAME	DEPENDENCIES	CLI (Hex)	DESCRIPTION	J-DRAWING
CLI		00	5E9(2) SM-2000, Release 1, with DSU3, UN363	J5D003NC-1, L2
	UNIT TYPE = SMPU4	01	(5E12) For UN590 pumpable UDSC4 with APR.	J5D003NC-1, L3, J5D003NG-1, L26

Figure 31 EQDSC3 Form - Div. 8, Sec. 54

FIELD NAME	DEPENDENCIES	CLI (Hex)	DESCRIPTION	J-DRAWING
NOTE: For 5E12 and later, the EVEN/ODD NLI CLI remote function for OLI boards was moved to the EQTRCUPTH form.				
EVEN/ODD NLI CLI Network Link Interface		00	5E9(2) SM-2000, Release 1, BKD1 paddle board to terminate NCT2 links.	J5D003NB-1, L10 J5D003NB-2, L9
		02	BKD7 CDX (CM2C) SM-2000.	J5D003NB-1, L12
	NOTE: The values listed for the ENLI are bitwise assignments. For a combination of hardware, the values must be "OR"ed together to get the actual			

	CLI value. ENLIs have the lowest bit set. NLIs have the lowest bit cleared. ENLIs are only valid for ORM-2000s. However, an NLI is used in ORM-2000s if connected with a TRCU3.		
SM USAGE = "ORM" and UNIT TYPE"SM2000"	01	EXM-2000, BKD3 (E)NLI NCT link.	J5D003NB-1, L14 J5D003NB-2, L13
	08	BKD3 type GNLI with time slot select switches connected to an AKM3 type OLI board.	J5D003ED-2, L5
	10	BKD3 type ENLI with time slot select switches connected to an 16E2 type OLI board.	J5D003ED-2, L11, L11A
	20	BKD3 type ENLI with time slot select switches connected to an 16F2 type OLI board.	J5D003ED-2, L12, L12A
	80	BKD3 type ENLI with time slot select switches connected to an 16G type OLI board.	J5D003ED-2, L8
	100	BKD3 type ENLI with time slot select switches connected to an 16K type OLI board.	J5D003ED-2, L9
	04	BKD11 connectors on SM-2000 connected to CM3.	J5003NB-2, L16

Figure 32 EQNLI Form - Div. 8, Sec. 55

FIELD NAME	DEPENDENCIES	CLI (Hex)	DESCRIPTION	J-DRAWING
CLI		00	TN1682 TMSU2 for QLPS	J5D020AG-2, L5 & 6A

Figure 33 EQQLPS Form - Div. 8, Sec. 56

FIELD NAME	DEPENDENCIES	CLI (Hex)	DESCRIPTION	J-DRAWING
CC 0/CC 1 CLI		00	KLU2 Common Controller.	J5D003FR-1, L2
CD 0/CD 1 CLI		00	KLU3 Common Data.	J5D003FR-1, L3
FI0/FI1 CLI		00	KTU2 STSX-1 Facility Interface.	J5D00FR-1, L5
STMX CLI		01	KTU1-B Transmission Multiplexer (spare).	J5D003FR-1, L4A
TMX CLI		00	KTU1 Transmission Multiplexer (service).	J5D003FR-1, L4
		01	5E13 SU KTU1-B replaces KTU1. Supports RSM on DNU-S.	J5D003FR-1, L4A

Figure 34 EQDNUS Form - Div. 8, Sec. 57

FIELD NAME	DEPENDENCIES	CLI (Hex)	DESCRIPTION	J-DRAWING
MH SIDE 0 CLI		00	Message Handler UN538.	J5D003NA-1, L10A
MH SIDE 1 CLI		00	Message Handler UN538.	J5D003NA-1, L10A
SMPU4/SMPU5 MH SIDE0/1 CLI	With Ethernet	C	5E16(2) and later Message Handler UN550 MH Slot 2	SMPU4 (J5D003NA-1,L35)
	Without Ethernet	4		SMPU5 (J5D003NG-1,L40)

Figure 35 EQMH Form - Div. 8, Sec. 58

FIELD NAME	DEPENDENCIES	CLI (Hex)	DESCRIPTION	J-DRAWING
LI CLI		00	9822DY STSX-1 Link Interface.	J5D003FR-1, L6

Copyright © 2006 Lucent Technologies

Figure 36 EQSTE Form - Div. 8, Sec. 59

FIELD NAME	DEPENDENCIES	CLI (Hex)	DESCRIPTION	J-DRAWING
CLI		00	Subunit SAS (Service Announcement System) memory pack TN1841 common board.	J5D003FR-1, L7

Figure 37 EQSASP Form - Div. 8, Sec. 61

FIELD NAME	DEPENDENCIES	CLI (Hex)	DESCRIPTION	J-DRAWING
CLI	UNIT TYPE = SMPU5	00	5E10 UN363	J5D003NG-1, L2
	UNIT TYPE = SMPU5	01	5E12 with UN590 pumpable UDSC4 with APR, replaces UN363.	J5D003NG-1, L26 J5D003NC-1, L3

Figure 38 EQGDSC3 Form - Div. 8, Sec. 63

FIELD NAME	DEPENDENCIES	CLI (Hex)	DESCRIPTION	J-DRAWING
CLI		00	5E11 AIU for DAC100 Common Data and Control (COMDAC) used to provide the interface between the SMP and the line packs.	J8G000AA-1, L2
		01	5E12 Remote (Extended) AIU COMDAC which supports T1 facilities.	J8G000AA-1, L11

Figure 39 EQAIU Form - Div. 8, Sec. 64

FIELD NAME	DEPENDENCIES	CLI (Hex)	DESCRIPTION	J-DRAWING
CLI		00	5E11 AIU for RGP100, Ring Generator which provides 100VA.	J8G000AA-1, L3
		00	5E11 AIU packs for LPZ100/B, standard POTS line pack, 32 LCs.	J8G00AA-1, L4, L4A
		00	5E11 AIU coin pack, 16 LCs.	J8G000AA-1, L4
		00	5E12 (R)AIU Test Application Pack	J8G000AA-1, L13
		00	5E12 AIU standard ETSI U-Interface (remote power) LPU112 Line Pack, 12 LCs.	J8G000AA01, L8A
		00	5E12 AIU standard ANSI U-Interface (non-remote power) LPU116 Line Pack, 16 LCs.	J8G000AA-1, L9
		00	5E16(2) Application Circuit Pack with 32 Z-Analog POTS Circuits (LPZ200). Provides integrated test and two dedicated test heads that can bbe used as normal POTS or external testing.	J8G000AA-1-L93

Figure 40 EQAIUP Form - Div. 8, Sec. 65

FIELD NAME	DEPENDENCIES	CLI (Hex)	DESCRIPTION	J-DRAWING

NOTES:

For 5E15 and later, with the introduction of the CM3 (Global Message Server), the TMS (Time Multiplex Switch) CLI information was moved to the EQTMS form from the EQCORE form.

The values listed for the TMS (Time Multiplexed Switch) CLIs are bitwise assignments. For a combination of hardware, the values must be "OR"ed together to get the actual CLI value. When bit number 10 is set (where bits are numbered from 0 to 31 and bit 0 is the right most bit), CM VINTAGE on the EQCORE form must be 2.

For 5E11 and later, the TMS CLI for an SM-2000 class processor can be: 100, 102, 104, 106, 108, 10a, 10c, 10e, 500, 502, 504, 506, 508, 50a, 50c, or 50e.

CLI		00	TMS vintage is of the following: 1) All double dual fabric offices with less than 94 SMs 2) Dual fabric offices with less than 30 SMs	J5D020A-1, L1 or L14; or J5D020B-1, L5 or L18
		02	5E2 TMS is equipped with KBN4 (vice KBN1) fabric boards; KBN5 for 5E7 and later.	J5D020A-1, L27 or J5D020B-1, L29 or L32
		00	CM1 TMS Model 1.	J5D001B or J5D001C w/o L12
		20	5E9(1)-5E9(2) CM2C is equipped with TN1812, TN1813, and TN1830 for CDX (Compact Digital Switch). For 5E15 and later, see the EQTMS form (Div. 8, Sec. 69); CLI field for more information.	J5D020AJ-5, L18 + L17 + L19, respectively.
		04	5E2 CM2 TMS is equipped with a UN321 board rather than a UN183.	J5D020A-1, L22
		08	5E2 CM2 TMS is equipped with UN503 and UN504 boards	J5D020B-1, L35+L36
		02	5E3 TMS Model 1 with redesigned test board. TN1575 (replaces TN276) for use with TRCU circuits.	J5D001C-1, L12
		100	(5E9(2) SM-2000, Release 1, CM2 is equipped with TN884C.	J5D020AG-2, L1
		500	5E15 CM3.	unavailable

Figure 41 EQTMS Form - Div. 8, Sec. 69

FIELD NAME	DEPENDENCIES	CLI (Hex)	DESCRIPTION	J-DRAWING
PCTDXO CLI		00	5E14	unavailable
PCTDX1 CLI		00	5E14	unavailable

Figure 42 EQPDXU Form - Div. 8, Sec. 72

FIELD NAME	DEPENDENCIES	CLI (Hex)	DESCRIPTION	J-DRAWING
TE0 CLI and TE1 CLI		00	5E15 Peripheral Link Interface (PLI) Board (BKD10).	J5D003NB-2, L15

Figure 43 EQPCTP Form - Div. 8, Sec. 74

FIELD NAME	DEPENDENCIES	CLI (Hex)	DESCRIPTION	J-DRAWING
CLI		00	5E15 OXU (Optically Extended Control and Data Unit); APCO - UN599.	J5D003NH-1, SD5D565-01

Figure 44 EQAPCX Form - Div. 8, Sec. 83

FIELD NAME	DEPENDENCIES	CLI (Hex)	DESCRIPTION	J-DRAWING
MODCTL SG0 CLI		00	5E15 OXU Extended Control and Data Unit Common Board, UN651.	J5D003NH-1, SD5D565-01
MODCTL SG1 CLI		00	5E15 OXU Extended Control and Data Unit Common Board, UN651.	
DI0 SG0 CLI		00	5E15 OXU Extended Control and Data Unit Common Board, UN651.	

Copyright © 2006 Lucent Technologies

DI0 SG0 CLI		00	5E15 OXU Extended Control and Data Unit Common Board, UN651.	

Figure 45 EQXCDU Form - Div. 8, Sec. 84

FIELD NAME	DEPENDENCIES	CLI (Hex)	DESCRIPTION	J-DRAWING
OFI 0 CLI OFI 1 CLI		00 00 01	5E16(2) OIU TDM Pack (LPA931) 5E16(2) OIU IP pack (LPA935) 5E16(2)OIU IP Pack (LPA936	J5D004Z-3 L3

Figure 46 EQOIUP Form Div. 8, Sec.86

FIELD NAME	DEPENDENCIES	CLI (Hex)	DESCRIPTION	J-DRAWING
		00	For 6A U-card.	J5D004AH-1, L8
		00	For KCB6 Z-card.	J5D004AK-1, L8
		2000	For KCB6B Z-card.	J5D004AK-1, LAY
		00	For KCB7 T-card.	J5D004AK-1, L7
		00	For KCB10 U-card.	J5D004AK-1, L28
		00	5E6 For KCB17 U-card.	J5D004AK-1, L33 or 33A

Figure 47 ISLULC Form - Div. 5, Sec. 5C

FIELD NAME	DEPENDENCIES	CLI (Hex)	DESCRIPTION	J-DRAWING
CLI	TYPE = "ULBD"	20000	5E10 MPU1B, U line circuit board.	J5D004AL-1, L60-A
	TYPE = "ULBD"	40000	5E10 MPU2, U line circuit board.	J5D004AL-1, L61
	TYPE = "TLBD"	80000	5E10 MPT1, T line circuit board, ISDN 4 Wire Digital Interface.	J5D004AL-1, L80
	TYPE = "WLBD"	00	5E10 MPW1, W line circuit board	NOT DETERMINED YET.

Figure 48 ISLULB Form - Div. 5, Sec. 5M

CHK	BIT	HEX	DESCRIPTION	J-DRAWING
	0	1	MCTSI equipped with TN28 memory packs (and either TN875 or TN875B control pack).	J5D003AY-1, L7 or J5D003AA-2, L7
	1	2	MCTSI equipped with TN56 memory packs and thus requires a TN875B (rather than TN875) control pack.	J5D003EC-1, L1 or J5D003AY-1, L8
	2	4	5E2(1) MCTSI supports Revertive Pulsing feature either as unit type SMSMP20	J5D003LA-1, L7
			or as unit type SMIMPU3	J5D003EC-1, L1
			or has TN127B and TN315B (rather than TN127 and TN315) packs in earlier units.	J5D003AT-1, L6 or J5D003AB-1, L5
	3	8	5E2(2) MCTSI equipped for 5E2 power monitor feature either as unit type SMSMP20	J5D003LA-1, L5
			or as unit type SMIMPU3	J5D003EC-1, L1
			or with CN6810 wiring change and SN516 (rather than SN412) in earlier units.	J5D003AT-1, L7 + LWA
	4	10	MCTSI equipped for possible connection to an ASU panel either as	
			MC5D154A1 for 5E5	J5D003LA-1, L20
			or with MC5D153A1B for 5E5	J5D003EC-1, L41 or J5D003AY-1, L33

Copyright © 2006 Lucent Technologies

			or with MC5D125A1 for 5E4(2) or with a MC5D132A1B for 5E4(2) or with a MC5D113A1B for 5E3 or with a MC5D080A1B for 5E2(2)	J5D003LA-1, L5 J5D003EC-1, L39 or J5D003AY-1, L32 J5D003EC-1, L23 or J5D003AY-1, L24 J5D003EC-1, L9 or J5D003AY-1, L16
	5	20	Unused	
	6	40	5E3 MCTSI is equipped with TN1377 to support the ISLU, RISLU, or PSUCOM interfaces. (5E8) MCTSI is equippedwith TN1377 to support the IDCU interface.	J5D003LA-1, L7 or J5D003EC-1, L27
	7	80	5E2(2) with BWM 86-0052) MCTSI is equipped either as SMSMP20 or is equipped with TN871B and TN875C and wiring change for processor speed up	J5D003LA-1, L5 J5D003EC-1, L33 + L34 +LWB or J5D003AY-1, L27 + L28 + LM
	8	100	Unused	
	9	200	5E2(2) with BWM 86-0057) MCTSI is equipped with 4 Megabyte TN2012 memory packs.	J5D003EC-1, L31+L32
	10	400	5E3 MCTSI is equipped with TN1397 processor core board.	J5D003EC-1, L29 or J5D003AY-1, L25
	11	800	5E2(1) MCTSI is equipped with 410AA power converter (410AA replaces 495FB and 494RA).	J5D003EC-1, LAY
	12	1000	5E4(2) MCTSI supports SDLC interrupt option either as unit type SMSMP20 or as SMIMPU3 with TN1617 (rather than TN872)	J5D003LA-1, L5 J5D003EC-1, L36
	13	2000	Unused	
	14	4000	(5E4 and earlier) MCTSI is equipped with 8 Megabyte TN1376 memory packs.	J5D003LA-1, L19
	15	8000	(5E6) MCTU2 is equipped with SMP20 Speed Up (SMP20 DATA CACHE)	J5D003EC-1
	16	10000	(5E5) This is the MCTU2 of the second (upper) SM equipped in this cabinet. This is used when two complete SMs are equipped in one cabinet. (Note: The list number given specifies the fusing required to support this option - it does not require that this second MCTU2 be equipped.)	J5D003L1, LBT

Figure 49 BLANK SMPU CLI ASSIGNMENT TABLE

Binary Bit Position	**31**	**30**	**29**	**28**	**27**	**26**	**25**	**24**	**23**	**22**	**21**	**20**	**19**	**18**	**17**	**16**
State of each bit (0 or 1)	0	0	0	0	0	0	0	0	0	0	0	0	0	0	0	
Hexadecimal Conversion (Actual CLI)	0				0				0							

Binary Bit Position	15	14	13	12	11	10	9	8	7	6	5	4	3	2	1	0
State of each bit (0 or 1)			0					0			0					
Hexadecimal Conversion (Actual CLI)																

Binary to Hexadecimal Conversion Table

Binary	Hex
0 0 0 0	0
0 0 0 1	1
0 0 1 0	2
0 0 1 1	3
0 1 0 0	4
0 1 0 1	5
0 1 1 0	6
0 1 1 1	7
1 0 0 0	8
1 0 0 1	9
1 0 1 0	A
1 0 1 1	B
1 1 0 0	C
1 1 0 1	D
1 1 1 0	E
1 1 1 1	F

Figure 50 BLANK SMPU CLI CONVERSION WORKSHEET

CHK	BIT	HEX	DESCRIPTION	J-DRAWING
	0	1	MCTSI equipped with TN28 memory packs (and either TN875 or TN875B control pack).	J5D003AY-1, L7 or J5D003AA-2, L7
	1	2	MCTSI equipped with TN56 memory packs and thus requires a TN875B (rather than TN875) control pack.	J5D003EC-1, L1 or J5D003AY-1, L8
X	2	4	5E2(1) MCTSI supports Revertive Pulsing feature either as unit type SMSMP20	J5D003LA-1, L7
			or as unit type SMIMPU3	J5D003EC-1, L1
			or has TN127B and TN315B (rather than TN127 and TN315) packs in earlier units.	J5D003AT-1, L6 or J5D003AB-1, L5
X	3	8	5E2(2) MCTSI equipped for 5E2 power monitor feature either as unit type SMSMP20	J5D003LA-1, L5
			or as unit type SMIMPU3	J5D003EC-1, L1
			or with CN6810 wiring change and SN516 (rather than SN412) in earlier units.	J5D003AT-1, L7 + LWA
X	4	10	MCTSI equipped for possible connection to an ASU panel either as	
			MC5D154A1 for 5E5	J5D003LA-1, L20
			or with MC5D153A1B for 5E5	J5D003EC-1, L41 or J5D003AY-1, L33
			or with MC5D125A1 for 5E4(2)	J5D003LA-1, L5
			or with a MC5D132A1B for 5E4(2)	J5D003EC-1, L39 or

Copyright © 2006 Lucent Technologies

				J5D003AY-1, L32
			or with a MC5D113A1B for 5E3	J5D003EC-1, L23 or J5D003AY-1, L24
			or with a MC5D080A1B for 5E2(2)	J5D003EC-1, L9 or J5D003AY-1, L16
	5	20	Unused	
X	6	40	(5E3) MCTSI is equipped with TN1377 to support the ISLU, RISLU, or PSUCOM interfaces. (5E8) MCTSI is equipped with TN1377 to support the IDCU interface.	J5D003LA-1, L7 or J5D003EC-1, L27
X	7	80	(5E2(2) with BWM 86-0052) MCTSI is equipped either as SMSMP20 or is equipped with TN871B and TN875C and wiring change for processor speed up	J5D003LA-1, L5 L5 J5D003EC-1, L33+L34+LWB or J5D003AY-1, L27+L28+LM
	8	100	Unused	
X	9	200	(5E2(2) with BWM 86-0057) MCTSI is equipped with 4 Megabyte TN2012 memory packs.	J5D003EC-1, L31+L32
X	10	400	5E3 MCTSI is equipped with TN1397 processor core board.	J5D003EC-1, L29 or J5D003AY-1, L25
	11	800	5E2(1) MCTSI is equipped with 410AA power converter (410AA replaces 495FB and 494RA).	J5D003EC-1, LAY
	12	1000	5E4(2) MCTSI supports SDLC interrupt option either as unit type SMSMP20 or as SMIMPU3 with TN1617 (rather than TN872)	J5D003LA-1, L5 J5D003EC-1, L36
	13	2000	Unused	
	14	4000	(5E4 and earlier) MCTSI is equipped with 8 Megabyte TN1376 memory packs.	J5D003LA-1, L19
	15	8000	(5E6) MCTU2 is equipped with SMP20 speed-up (SMP20 DATA CACHE)	J5D003EC-1
	16	10000	(5E5) This is the MCTU2 of the second (upper) SM equipped in this cabinet. This is used when two complete SMs are equipped in one cabinet. (Note: The list number given specifies the fusing required to support this option - it does not require that this second MCTU2 be equipped.)	J5D003LA-1, LBT

Figure 51 SAMPLE SMPU CLI ASSIGNMENT TABLE

Binary Bit Position	**31**	**30**	**29**	**28**	**27**	**26**	**25**	**24**	**23**	**22**	**21**	**20**	**19**	**18**	**17**	**16**
State of each bit (0 or 1)	0	0	0	0	0	0	0	0	0	0	0	0	0	0	0	0
Hexadecimal Conversion (Actual CLI)	0				0				0				0			

Binary Bit Position	**15**	**14**	**13**	**12**	**11**	**10**	**9**	**8**	**7**	**6**	**5**	**4**	**3**	**2**	**1**	**0**
State of each bit (0 or 1)	0	0	0	0	0	1	1	0	1	1	0	1	1	1	0	0
Hexadecimal Conversion	0				6				D				C			

(Actual CLI)				

Binary to Hexadecimal Conversion Table

Binary	Hex
0 0 0 0	0
0 0 0 1	1
0 0 1 0	2
0 0 1 1	3
0 1 0 0	4
0 1 0 1	5
0 1 1 0	6
0 1 1 1	7
1 0 0 0	8
1 0 0 1	9
1 0 1 0	A
1 0 1 1	B
1 1 0 0	C
1 1 0 1	D
1 1 1 0	E
1 1 1 1	F

Figure 52 SAMPLE SMPU CLI CONVERSION WORKSHEET

CHK	BIT	HEX	DESCRIPTION	J-DRAWING
	0	1	5E2(2) DLI or RLI with power monitor feature as unit type SMSMP20 or as unit type SMIMPU3 or earlier vintage DLI with SN516 vice SN412	J5D003LA-1, L7 or J5D003EC-1, L1 or J5D003AT-1, L7 +LWA
	1	2	4-link RLI without timeslot switches	J5D003AT-1 w\o L4 or J5D003EC-1 w\o L2 or J5D003LA-1 w\o L12
	2	4	(5E3) TN1077B type DLI (needed for 5E3 ORM) or RLI with TN1077B	J5D003EC-1, L21 or J5D003LA-1, L7
	3	8	(5E5) AKM3 type OLI board on a TRCU Version 2. Valid with either [J5D003EC-1, L1 + L2 + L21E] or [J5D003LA-1, L7 + L12]	J5D003ED-2, L5
	4	10	(5E5) Equipped with 16E type OLI board on a TRCU Version 2	J5D003ED-2, L6
	5	20	(5E5) Equipped with 16F type OLI board on a TRCU Version 2	J5D003ED-2, L7
	6	40	5E4(2) for RLI with an FIU equipped with TN1510 (replaces 2 TN834 packs and a TN835) (5E3) supported in 5E3 with BWM 88-0088 installed (5E2(2)) supported in 5E2(2) with BWM 8800-95 installed	J5D003AP-3, L7
	7	80	(5E5) Equipped with 16G type OLI board on a TRCU Version 2	J5D003ED-2, L8
	8	100	(5E5) Equipped with 16K type OLI board on a TRCU Version 2	J5D003ED-2, L9
	9-31		Unused	

Figure 53 BLANK DLI CLI ASSIGNMENT TABLE

The following table provides CLI assignments for the TRCU (Transmission Rate Converter Unit) by software release and form/view.

BOARD AND LISTS ARE SHOWN BELOW PER J5D003ED2	Replaced with EQTMSLINK form. CLI values for TRCU unit only, ORd values are not used (host end)	BKD3 ENLI value of 01 must be ORd with TRCU values shown below (remote end).	TRCU & DLI values for the SM must be ORd together (remote end).	Both CLIs values for the QLI BD and the TRCU unit are shown in separate fields on this form (host end).	HOST end	REMOTE end
FORM/VIEW	EQORMLINK (17.12)	EQNLI - SM-2000 (18.16)	EQIM - SM (18.1)	EQTMSLINK (17.12)	EQTMSLINK (17.12)	EQTRCUPTH (17.23)
FIELD	TRC CLI	Even/Odd NLI CLI	DLI CLI	TRC & OLI	HOST CLI	REMOTE CLI
GENERIC	5e8.1 to 5e9.1	5e9.2 to 5E11	5E11 and earlier	5E9.1 to 5E11	5E12 & later	5E12 and later
16E2 (L-11)	2	10	10	2	1	10
16E (L-6)	2	10	10	2	2	10
16F2 (L-12)	4	20	20	4	4	20
16F (L-7)	4	20	20	4	4	20
16G (L-8)	8	80	80	8	8	80
16K (L-9)	10	100	100	10	10	100
AKM3 (L-5)	1	8	8	1	1	8
	For 5E9 & later, this form is no longer used; replaced by the EQTMSLINK form.	5E12 & later, only the ENLI CLI value of 01 is shown on this form. Remote TRCU CLIs are shown on the remote section of the EQTRCUPTH (17.23) form.	For 5E12 & later, the value for the remote TRCU is no longer ORd with the CLI value but is shown on the EQTRCUPTH (17.23) for the first & second remote path CLIs (17.23)	For 5E12 & later, the TRCU CLI field is dropped from this form. Host TRCU CLI values are now shown on the first & second host path of the EQTRCUPTH (17.23) form.	For 5E9.1 and earlier, these CLIs are shown on EQORMLINK form. For 5E9.2 to 5E11, these CLIs are shown on the EQTMSLINK form.	For 5E11 & earlier, these CLIs for SMs are shown on the EQIM. For SM-2000, the se CLIs are shown on the EQNLI form.

Figure 54 TRCU ASSIGNMENT TABLE

The following table provides or'd MCTU3 CLI entries that are valid for 1) new installations of MCTU3 (J5D003LB) processors, 2) system upgrades (permanent replacements) of MCTU1 processors with MCTU3 processors (e.g., RSM), and 3) for replacing a MCTU1 processor with a transitional MCTU3 processor so that the MCTU1 and its SMC (Switching Module Controller) cabinet can be removed while the SM is using the MCTU3 processor, allowing the floorspace to be re-used for a SM-2000 SMC cabinet.

SM Usage (EQIM Form)	Circuit Boards	ODA Form	Field Name	CLI Value
Local/ Host/ RSM/ **ORM**	KBN21B/KBN21C (64Meg Core Board) TN1377 TN1086B TN1424 TN1042B (if equipped, PI	EQIM/18.1	MCTSI 0/1 CLI IMPU	0x200810dc

	board needed for PSU1)			
	KBN22B/KBN22C (96Meg Core Board) TN1377 TN1086B TN1424 TN1042B (if equipped, PI board needed for PSU1)			0x200c10dc
	KBN21B/KBN21C (64Meg Core Board) TN1377 TN1086B TN1424 UN395B (if equipped, PI board needed for PSU2)			0x300810dc
	KBN22B/KBN22C (64Meg Core Board) TN1377 TN1086B TN1424 UN395B (if equipped, PI board needed for PSU2)			0x300c10dc
Local/Host	TN1077F	EQIM/18.1	DLI 0/1	0x800605
	UN71C	EQCI/18.2	CLI	0x01
	TN833C	EQIM/19.5	LDSU	0x800009
	TN1890	EQIM/19.5	LDSU	0x800019
RSM	**FIU2** with TN834 and TN835. Note: With TN1077F — minimally configured; J5D003LB, L15 was ordered (paddle board, time slot selection switch required when the MCTU3 is used in minimally equipped RSM applications; two per service group).	EQIM/18.1	DLI 0/1	0x800605
	FIU3 with TN1510. Note: With TN1077F — (same as above)	EQIM/18.1	DLI 0/1	0x800645
	FIU2 with TN834 and TN835. Note: With TN1077F — fully equipped; without time slot selection.	EQIM/18.1	DLI 0/1	0x800607
	FIU3 with TN1510 Note: With TN1077F — fully equipped; without time slot selection.	EQIM/18.1	DLI 0/1	0x800647
	UN71C	EQCI/18.2	CLI	0x1
	TN833C	EQIM/19.5	LDSU	0x800009
	TN1890	EQIM/19.5	LDSU	0x800019
ORM	TN1077F — Without External Timing reference	EQIM/18.1	DLI 0/1	0x800605

cable.			
TN1077F — With External Timing reference cable, ordered by ED5D503-32, group 380 or 381.	EQIM/18.1	DLI 0/1	0x800e05
UN71C	EQCI/18.2	CLI	0x01
TN833C	EQIM/19.5	LDSU	0x800009
TN1890	EQIM/19.5	LDSU	0x800019

Figure 55 MCTU3 CLI Values

ODA Form Depend`encies	J-drawing version	Cable Dependencies	Pack List	CLI Value
EQCORE.VCDX is "N" EQIM.SM USAGE is NOT "ORM" (Local or Host SM application	J5D003NB-1	None.	UM74 UM74B UM74C UM74D	0x0000 0x0000 0x0000 0x0000
	J5D003NB-2	None.	UM74C UM74D	0x0010 0x0010
EQCORE.VCDX is "N" EQIM.SM USAGE is "ORM" (EXM application)	J5D003NB-1	No external timing reference cables	UM74B UM74C UM74D	0x0001 0x0001 0x0021
		External timing reference cables equipped ED5D500-21 grp 454 or 455	UM74B UM74C UM74D	0x0003 0x0003 0x0023
	J5D003NB-2	No external timing reference cables	UM74C UM74D	0x0011 0x0031
		External timing cales equipped ED5D500-21 grp 454 or 455	UM74C UM74D	0x0013 0x0033
EQCORE.VCDX is "Y" (VCDX application)	J5D003NB-1	External timing reference cables requred ED5D500-21 grp 454 or 455	UM74B UM74C UM74D	0x0003 0x0003 0x0023
	J5D003NB-2	External timing reference cables required ED5D500-21 grp 454 or 455	UM74C UM74D	0x0013 0x003

Figure 56 NAR TSI CLI Value Decision Table

Copyright © 2006 Lucent Technologies

SEC. 2: 5700-1/2 RECORD
SWITCHING MODULE EQUIPAGE FORM - EQIM

1. GENERAL

The 5700-1/2 Records are used to define Switching Module Equipage Assignments.

1.1 SM Time Slots

Each non-SM-2000 SM has 512 time slots (TS) available for various functions. Some of these 512 are available on call and some are reserved. In DNS (Digital Network Switch) offices, at least three TS are always required in each SM, one for audible ring, one for precedence audible ring, and one for idle code. Prior to DNS, only two TS were required, one for audible ring and one for idle code.

(Refer to Division 8, Section 22 for more TS information.)

If at least one EQIM form is entered, the IOMI BOARDS field on the ECDOPT form (5706 Record) and the number of EQIM forms submitted must correspond to the following table:

NO. OF EQIM FORMS	IOMI BOARDS
1 - 32	1
33 - 96	2
97 - 160	3
161 - 192	4

For 5E6 and later, MCTU2 SMs can be equipped with a mix of 4, 8, or 16 megabyte memory boards. For 5E9(2) and later, a 32 megabyte memory board was implemented for an SM-2000 class processor; it is not valid for an SM.

For 5E9(1) and later, if CMTYPE is "CM2C" on the ECDOPT form and the TIME MULTIPLEXED SWITCH CLI on the EQCORE form is 20:

- the maximum number of EQIM forms must be 8 or less.
- the maximum number of EQIM forms with SM USAGE of "IM", "" or "ORM" must be 2 or less.
- the maximum number of EQIM forms with SM USAGE of "RSM" must be 6 or less.

1.2 Required Configurations Values

For 5E9(2) and later, Figure 2 shows the valid configuration values for specific facilities and applications. Data rules for the application or facility on the corresponding forms reference this table for the appropriate CONFIGURATION values.

1.3 Maximum ISDN Terminals

For 5E9(2) and earlier, the value assigned in TERMLIM defines the maximum number of ISDN Terminals that are allowed to be simultaneously active per SM. TERMLIM is a no display field on the EQIM form with a default of 2047. In most cases, TERMLIM should be set to this value. The ISDN Terminals are defined as follows:

ISDN Terminal Assignments		
Form	SM	Number of Assignments
DSL	OE[1,3]	MTERM defines the quantity of ISDN Terminals per DSL form.

Copyright © 2006 Lucent Technologies

DSLAP	LCEN[1,3]	number of ISDN Terminals is incremented by 1 for each LCEN list element defined.
MISLINK	OE[1,3]	1
OSPSDSL	LCEN[1,3]	1 where SERVICE CLASS is not "XDB"

1.4 Recent Change View

The corresponding Recent Change View for this form is 18.1.

2. FORM AND RECORD ENTRIES

2.1 BASE AND CONTROL, ESS UNIT

Enter the Base and Control Number and the Office Name on each record.

2.2 * SM

Description: Enter the SM (Switching Module) Number. For offices equipped with Communications Module 1 (CM1), valid entries are 1 - 48. For offices equipped with CM2 and CM3 valid entries are 1 - 192.

Required Field.
Valid Entries: 1 - 192

Data Rules:

For 5E15 and later, when SM is entered, and SM USAGE equals "ORM" and the processor is not "SM2000", there must not be more than four EQTMSLINK tuples matching the SM on the EQIM form.

The EQCORE form (5701 Record) must be inserted before this form can be inserted/updated.

The SMs on this form must have between 1 and 383 megabites of memory per CONTROLLER for the CONFIGURATION of "2KPPC" entered on the EQIM form.

2.3 SM USAGE

Description: Enter the type of SM (Switching Module).

An SM in a host office can have a mixture of local and host applications. If at least one DFI (Digital Facility Interface) of a DLTU (Digital Line and Trunk Unit) is being used as an umbilical link to an RSM, this field must be defined as "HIM".

An SM with SM USAGE of "ORM" represents an SM that can be physically remote from the host office over standard transmission facilities that connect to a TRCU (Transmission Rate Converter Unit) located in the host office.

An SM with SM USAGE of "TRM" represents an SM that can be remote over extended NCT (Network Control Timing) Links, which presently have a physical limitation of approximately two miles from the host office. This maximum distance will increase as hardware improvements are made to the physical paddle boards associated with the NCT Links.

The ORM and TRM Switching Module types are treated similarly to Local Switching Modules for most feature and call processing applications, but there are some restrictions and exceptions:

- ORM/TRM cannot serve as Host SM (HIM types); therefore, they cannot have a DLTU with associated

Copyright © 2006 Lucent Technologies

DFIs that interconnect to RSMs.

- MSU/MMSUs (Metallic Service Unit/Modular Metallic Service Units) are allowed on ORM/TRMs but they cannot be interconnected to any other MSU/MMSU via MTIBs (Metallic Test Interconnect Buses). Colocated ORM/TRMs can share an MSU/MMSU.

- ORM/TRMs can be considered as Routing Modules for Distributed Call Processing.

Required Field.
Default: IM
Valid Entries:

Valid SM USAGE Entries

Entry	Definition
IM	Local Switching Module. Also, enter IM when the SM is a VCDX or DRM.
HIM	Host Switching Module.
RSM	Remote Switching Module.
ORM	Software Release: 5E3 and later. Optically Remote Switching Module. Software Release: 5E9(2) and later: ORM with UNIT TYPE set to an SM-2000 class processor is used for EXM-2000.
TRM	Software Release: 5E3 and later. Two-Mile Optically Remote Switching Module.

Data Rules:

For 5E8 and later, when one or more SMs with SM USAGE of "IM" or "HIM" exist, and there is only one matching EQDCTU form, they must have the same DCTU ROUTE INDEX value entered on the associated IMINFO, excluding the DCTU ROUTE INDEX values that have ROUTE TYPE set to "REORDER" on the RTIDX form.

When SM USAGE is "IM" or "HIM", STAND ALONE and STAND ALONE BILLING must be known.

For 5E9(1) and later, SMs with line units that have SM USAGE of "IM", "ORM", or "TRM", must have a Dial Tone Delay Alarm (External Sanity Monitor) assigned via the LINE form. Two TNs are required, one of which must be a direct connect (NODL set to "HOT"). In addition, the following conditions must be met:

- SUSO must be "N"

- SUST must be "Y"

- PTY must be "I"

- HOT LINE TN must be known and a number

- OE TYPE = "C" or "L"

NOTE: The External Sanity Monitor has been discontinued and is no longer required after 1990.

5E9(2) and later:
SM USAGE must be set to "IM" for a VCDX (Very Compact Digital Exchange) office.

5E10 and later:
RSMs may only have ISTF loopback and ISTF transmit circuit assignments via the EQGDSC3 form (5860

Copyright © 2006 Lucent Technologies

record). See Division 8, Section 63 for RSM EQGDSC3 assignments.

ORM
If SM USAGE is "ORM":

- UNIT TYPE must be "SMPU3", "SMPU4", "MCTU3" "SM2000", "SM2005", or "SMU6" class processor.
- and UNIT TYPE is "SM2000", then TRCCKT, TRCUNUM, and TRCCLI must be entered on the EQTMSLINK form (5851 Record).

For 5E10 and later, when SM USAGE is "HIM" and UNIT TYPE is "SM2000" on the EQIM form, the maximum number of Inter-SM Nail-Ups for packet switching is 30. If UNIT TYPE is not "SM2000" and SM USAGE is "HIM", the maximum number of Inter-SM Nail-Ups for packet switching is 5.

For 5E11 and later, when SM USAGE is "ORM", then UNIT TYPE must be "SMPU3", "SMPU4", "MCTU3", "SM2000" or "SM2005".

For 5E12 and later, when SM USAGE is "ORM" with a UNIT TYPE of a SM-2000 class processor, the appropriate value for EVEN NLI NLI) CLI, EVEN NLI NLI 1 CLI, ODD NLI NLI 0 CLI, and ODD NLI NLI 1 CLI, depends on the type of TRCU (Transmission Rate Converted Unit) defined on the EQTRCUPTH form associated with that EQNLI form entry. When the TRCU is of type "TRCU3", then EVEN NLI NLI 0 CLI, EVEN NLI NLI 1 CLI, ODD NLI NLI 0 CLI, and ODD NLI NLI 1 CLI, must be 0 hex. When the TRCU is of type "TRCU2", then EVEN NLI NLI 0 CLI, EVEN NLI NLI 1 CLI, ODD NLI NLI 0 CLI, and ODD NLI NLI 1 CLI must be 1 hex.

For 5E16(2) FR 6 and later, when EQSTATUS is "O" or "G", and SM USAGE is "ORM" and UNIT TYPE is "SMU6" on this form (EQIM), and when HOST TYPE on the EQTRCUPTH form (5814 Record) is "TRCU3", then NLI 0/1 CLI on the EQNLI form (5701 Record) must be (NEED REWORK)

For 5E15 and later:

When SM USAGE is "ORM" and the processor is not an SM-2000 class processor, the values of SM and NCT EVEN LINK (on EQIM form) must be entered twice on the EQTMSLINK form as SM and LINK (for SIDE 0 and SIDE 1). And the values of SM and NCT ODD LINK (i.e., NCT EVEN LINK plus 1) must be entered twice on the EQTMSLINK form as SM and LINK (for SIDE 0 and SIDE 1). Also, theTMSFP NUM on the EQTMSLINK form must be 0.

5E16(2) and later

When SM USAGE is not "ORM" and UNIT TYPE is "SM2000", "SM2005", or "SMU6" on this form (EQIM), and CM VINTAGE on the EQCORE form is 2, then QLI CLI on all EQTMSLINK forms (5851 Record) associated with the SM must be 100, otherwise QLI CLI must not be 100.

When SM USAGE is not "ORM" and UNIT TYPE is not "SMU6" on this form (EQIM), then NLI 0/1 CLI on the EQNLI (5701 Record), must be 0h or 4h hex.

When SM USAGE is not "ORM" and UNIT TYPE is not "SMU6" on this form (EQIM), and when CM VINTAGE is 3 on the EQCORE form, then the value of EVEN NLI 0/1 CLI and ODD NLI 0/1 CLI on the EQNLI (5701 Record), must be 8h or 14h hex.

When SM USAGE is not "ORM" and UNIT TYPE is "SM2000", "SM2005", or "SMU6" on this form (EQIM), then several EQTRCUPTH form (5814 Record) entries associated with this SM (NEED WORK), and when CM VINTAGE is 3 on the EQCORE form, then the value of EVEN NLI 0/1 CLI and ODD NLI 0/1 CLI on the EQNLI

Copyright © 2006 Lucent Technologies

(5701 Record), must be 8h or 14h hex.

Every EQIM form entry having SM USAGE equal to "ORM" and UNIT TYPE not equal to "SM2000", "SM2005", or "SMU6" must have one and only one corresponding EQTRCUPTH form where EVEN LI is 0.

When SM USAGE is "ORM" and UNIT TYPE is not "SM2000", "SM2005", or "SMU6" on this form (EQIM), then TRCU NUMBER on the EQCMTRCU form (5812 Record) entry for that SM must be 1.

When SM USAGE is "ORM" and UNIT TYPE is not "SM2000", "SM2005", or "SMU6" on this form (EQIM), then TRCU TYPE on the EQCMTRCU form (5812 Record) entry for that SM must not equal "TRCU".

Every EQIM form entry having SM USAGE equal "ORM" and UNIT TYPE is "SM2000", "SM2005", or "SMU6" must have atl least one corresponding EQTRCUPTH form entry and each of these entries must have TRCU FIRST PATH HOST TYPE, TRCU FIRST PATH REMOTE TYPE, TRCU NEXT PATH HOST TYPE, and TRCU NEXT PATH REMOTE TYPE set to "TRCU2" or "TRCU3".

2.4 REMOTE SITE

Description: Enter the Remote Site number.
Valid Entries: 1 - 174

Data Rules:

For 5E5 and later, this field is required when the SM USAGE is "RSM", "ORM" or "TRM".

All Switching Modules in the same Remote Cluster must have the same REMOTE SITE value. The value entered in this field must be defined on an EQSITE form (5722 Record). Up to four RSMs can share the same REMOTE SITE if they are in the same Cluster. Each ORM/TRM must have its own unique REMOTE SITE even if co-located. It is suggested that the REMOTE SITE value for an ORM/TRM be the same as the ORM/TRM SM Number.

2.5 EQSTATUS

Description: Enter the Status of the Equipment.

Required Field.
Default: O
Valid Entries:

Valid EQSTATUS Entries

Entry	Definition
U	Unequipped.
G	Growth.
O	Operational.
S	Special Growth.

Data Rules:

For 5E9(2) and later, if UNIT TYPE is "SM2000" and EQSTAT is not equal to "O", only one EQNLI form can be entered.

For 5E16(2) FR 6 and later,, when EQSTATUS is "O" or "G" and UNIT TYPE is not "SMU6" on this form (EQIM) and when HOST TYPE on the EQTRCUPTH form is "TRCU3", then NLII 0/CLI on the EQNLI form (5853Record) mus be 0h and CM VINTAGE (NEED WORK)

Copyright © 2006 Lucent Technologies

2.6 INTERRUPT STATUS

Description: Enter the Interrupt-Inhibit Status.

Required Field.
Default: ALLOW
Valid Entries:

Valid INTERRUPT STATUS Entries	
Entry	**Definition**
A	Allow.
I	Inhibit.

2.7 CONTROL GROUP 1 STATUS

Description: Enter the Control Group 1 Equipment Status. New offices should be "O" or blank. Enter "O" for Operational if Control Group 1 (second CI Board) is equipped on the SM; otherwise, leave blank.

Software Release: 5E9(1) and earlier
Valid Entries:

Valid CONTROL GROUP 1 STATUS Entries	
Entry	**Definition**
U	Unequipped.
G	Growth.
O	Operational.

Data Rules:

If the SM USAGE is "RSM", this field must be "O".

2.8 NCT EVEN LINK

Description: Enter the unique NCT (Network Control Timing) even link number for the SM. Two NCT links, an even and an odd, are associated with each SM. Since the NCT odd link number is always one greater than the NCT even link number, only the even NCT link number is entered on this form.
Valid Entries: 2 - 380, even numbers only

- or for
- VCDX SM-2000: 0

Data Rules:

An entry in this field is required if SM USAGE is equal to "IM", "HIM", "ORM", or "TRM". If the SM USAGE is "RSM", an entry in this field is prohibited.

For 5E8 - 5E9(1), TMS LINKs are assigned on the EQIM form as NCT EVEN LINK. Additional TMS LINKs are derived from these same EQIM form entries in the following manner: an NCT EVEN LINK entry also produces a TMS LINK entry of NCT EVEN LINK + 1 (known as the NCT ODD LINK). All TMS LINK values either entered on these forms OR derived from these form entries must be unique.

For 5E9(1) and later, if CMTYPE on the ECDOPT form is "CM2C" and the TIME MULTIPLEXED SWITCH CLI on the EQCORE form is "20", NCT EVEN LINK must be either 2 or 4.

For 5E9(2) and later:
For an SM-2000 class processor, NCT EVEN LINK must be assigned to the EVEN NLI 0 and the EVEN NLI

Copyright © 2006 Lucent Technologies

TMS 0 on the EQNLI form (5853 Record).

TMS LINKS can be assigned on the following three forms:

- EQIM form (5700-1/2 Record) as NCT EVEN LINK
- EQNLI form (5853 Record) as EVEN (or ODD) TMS LINK 0
- EQQLPS form as STARTING QTMSLINK.
- EQTMS form (5866 Record) as FABRIC TYPE.

On each form additional TMS LINKS are derived from the specified link and the TMS configuration. All TMS LINKs entered or derived on these forms must be unique in the switch.

For 5E10 and later:
For a VCDX office on an SM-2000 class processor, the NCT EVEN LINK Number must be 0.

For 5E15 and later, when an office is equipped with a CM3, NCT EVEN LINK must be an even number in the range of 4 thru 368.

2.9 CTS EVEN LINK

Description: Enter the even Control Time Slot Number associated with the even NCT (Network Control Timing) Link. Each SM receives two CTS (Control Time Slot) assignments, an even CTS on the even NCT link, and an odd CTS on the odd NCT link. Since the odd CTS is always one greater than the even CTS, only the even CTS is entered on this form.

The CTS numbers are dependent on the Peripheral Controllers defined on the EQPC form (5703 Record). For the relationship between the Peripheral Controllers and the even and odd CTS numbers, see the section describing the equipage of Peripheral Controllers in Division 8 of this guide. The last Control Time Slot is 254.

The Peripheral Controllers are defined on the EQPC form (5703 Record). However, because of the relationship to the Control Time Slots, a column is shown on the 5700-1 Record for PC - Peripheral Controller. This is intended as an administrative aid. No PC entries are applicable for ODA on the EQIM form.

Required Field.
Valid Entries: 2 - 254, even numbers only

Data Rules:

Invalid Time Slot Numbers are every multiple of 8 (0,8,16,24,...).

For 5E9(1) and later, if CMTYPE on the ECDOPT form is "CM2C" and the TIME MULTIPLEXED SWITCH CLI on the EQCORE form is 20, CTS EVEN LINK must be either 2, 10, 18, 26, 34, 42, 50, or 58 (which corresponds to PC (PERIPHERAL CONTROLLER) NO on the EQPC form (5703 Record).

2.10 EQUIPMENT AISLE

Description: Enter the Equipment Location Aisle Number. This entry consists of a floor and aisle number. The first and second digits, from the left, are the floor number. Valid floor numbers are 00-99. The third and fourth digits, from the left, are the aisle number. Valid aisle numbers are 00-99. It is recommended that floor 00 be used for equipment located in the basement per floor plan designation.

Copyright © 2006 Lucent Technologies

Required Field.
Valid Entries: 0000 - 9999

2.11 LOCAL DSU VERTICAL

Description: Enter the vertical equipment location of the bottom of the Local Digital Service Unit on the Switching Module Controller Frame.

Required Field.
Valid Entries: 0 - 84

Valid LOCAL DSU VERTICAL Entries

Entry	Definition
15	6-foot cabinet with UNIT TYPE set to "SMPU4" or an SM-2000 class processor.
24	6-foot cabinet with UNIT TYPE set to "MCTU3" (if SM USAGE is not "ORM").
32	6-foot cabinet.
41	6-foot cabinet with UNIT TYPE set to "SMPU3" (if SM USAGE is not "ORM").
49	6-foot cabinet with 1 shelf IMP (UNIT TYPE set to "SMPU2". 6-foot cabinet with UNIT TYPE set to "SMPU3" (if SM USAGE is "ORM").
58	6-foot cabinet with 2 shelf IMP UNIT TYPE set to "SMPU".
64	7-foot cabinet.

Data Rules:

For 5E5 and later, if UNIT TYPE is "SMPU4" and the corresponding EQDS2P form has a DIGITAL SERVICE UNIT 2 field with the value of "O" and a PACK TYPE with the value of "RVPT", then the LOCAL DSU VERTICAL value must be either 32 or 41. If the corresponding EQDSP form with a DIGITAL SERVICE UNIT value of 0 does NOT have a PACK TYPE value of "RVPT", then the LOCAL DSU VERTICAL must be the same as the value for the MODULE PROCESSOR VERT field.

For UNIT TYPE of "SMPU4", the LDSU vertical position must be set to the cabinet location of the base of the MCTSI complex.

2.12 MODULE PROCESSOR VERT

Description: Enter the vertical equipment location of the bottom of the Switching Module Processor Unit on the Switching Module Controller Frame.

Required Field.
Valid Entries: 0 - 84

The following table provides unit types and appropriate vertical equipment location positions by cabinet size.

Unit Type	Verticle Position/Cabinet Size
SMPU	24 for 6-foot cabinet. 28 for 7-foot cabinet.
SMPU2	24 for 6-foot cabinet. 36 for 7-foot cabinet.
SMPU3	24 for 6-foot or 7-foot cabinet. 41 for 2nd SM in cabinet.
SMPU4/ MCTU2	15 for 6-foot cabinet. 41 for 2nd SM in cabinet.
SM2000	15 for 6-foot cabinet.
MCTU3	5E10 and later. 24 for 6-foot cabinet. 41 for 2nd SM in cabinet.
SM2005	5E11 and later.

Copyright © 2006 Lucent Technologies

	15 for 6-foot cabinet.

Data Rules:

If UNIT TYPE is "SM2005", the LDSC3 and GDSC3 boards are located at Vertical Position 15 and UNIT OFFSET on the EQGSC3 and EQGDSC3 forms must be greater than 17, and the BAY field must be "0".

2.13 SMPU MODEL NUMBER

Description: The name of this field was changed to UNIT TYPE for 5E9(2) and later. This field name applies to 5E9(1) and earlier. See UNIT TYPE for usage information.

2.14 UNIT TYPE

Description: Enter the UNIT TYPE for this SM.

NOTE: Prior to 5E9(2), UNIT TYPEs were referred to as SMPU MODEL NUMBERs 1 - 4. Effective with the 5E9(2) Software Release, UNIT TYPE is designated by "SMPU", "SMPU2", "SMPU3", "SMPU4", or "SM2000". All references to SMPU MODEL NUMBER have been changed to UNIT TYPE. Also see Figures 1, 2, and 3 for additional information.

Required Field.

Valid UNIT TYPE Entries

Entry	Definition
1	Software Release 5E9(1) and earlier. See SMPU.
2	Software Release 5E9(1) and earlier. See SMPU2.
3	Software Release 5E9(1) and earlier. See SMPU3.
4	Software Release 5E9(1) and earlier. See SMPU4.
SMU6	Software Release 5E16(2) FR 6 and later. Switching Module Uunit 6. This unit supports the SM-XC feature (see Division 2, Section 7CI).
SMPU	Software Release 5E9(2) and later. A two-shelf unit that resides on two shelves of the Switching Module Controller Frame. Associated with J5D003AA-2 and J5D003AB-1.
SMPU2	Software Release 5E9(2) and later. A single shelf unit which resides on a single shelf of the Switching Module Controller Frame. Associated with J5D003AT-1 and J5D003AY-1.
SMPU3	Software Release 5E9(2) and later. SMPU3 combines the Module Processor and Time Slot Interchanger into a single unit that resides on two shelves of the Switching Module Controller Frame. It is also known as the MCTU (Module Controller Time Slot Interchange Unit). Associated with J5D003EC-1.
SMPU4	Software Release 5E9(2) and later. The fourth hardware configuration of the MCTSI utilizing the MC68020 processor. Associated with J5D003LA-1.
SM2000	Software Release 5E9(2) and later. SM-2000 class processor unit; processor boards occupy the entire available space of the unit. Associated with J5D003NA-1 (Modular Fuse Filter Unit and Fan Unit).
MCTU3	Software Release 5E10 and later. MCTSI hardware associated with J-Drawing J5D003LB-1.
SM2005	Software Release 5E11 and later. SM-2000 class processor unit; accommodates as many as 6 LDSC3/GDSC3 boards. Associated with J-Drawing J5D003NG-1.

Copyright © 2006 Lucent Technologies

NOTE: Because the "SM2000" and the "SM2005" units denote the SM-2000 environment, they are referred to as a "SM-2000 class" of SMP units.

Data Rules:

For "SMPU", "SMPU2", and "SMPU3" only one memory board size (2MB or 4MB) can be assigned to an SM.

The maximum addressable memory on a non-SM-2000 SM is 32 MB.

Only the following unit types can have more than one Memory Board type (4MB, 8MB, etc.) specified by the CLI value: "SMPU4", "MCTU3", and an SM-2000 class processor .

For 5E16(2) FR 5, when UNIT TYPE is "SMPU2", "SMPU3", "SMPU4", or "MCTU3", CONFIGURATION cannot be "SM2000" or "2KPPC".

If the SM USAGE field is "ORM" (Optically Remote Switching Module), the associated SMPU must be "SMPU3", "SMPU4", or an SM-2000 class processor.

If UNIT TYPE is "SMPU4" and CONFIGURATION is "STANDARD", at least 18 megabytes of memory are required per Controller.

If UNIT TYPE is "MCTU3", "SMPU3", "SMPU4", or an SM-2000 class processor, BAY on the following equipment forms must be 1:

EQDCLU
EQDCTU
EQDS
EQFIU
EQIM
EQLU
EQMSU
EQTU

For 5E9(2) and later:
UNIT TYPE must be set to "SMPU4" for a VCDX (Very Compact Digital Exchange) office.

SMPU2:
If UNIT TYPE is "SMPU2":

- CONFIGURATION must not be "SM2000",
- LDSU CLI for CONTROLLER 0 and CONTROLLER 1 must be entered,
- DLI CLI for CONTROLLER 0 and CONTROLLER 1 must be entered,
- MH 0/MH 1 CLI for SG0/SG1 must not be entered.
- the bit number 7 (processor speed-up) of the IMPU CLI 0/1 must be set, where the bits are numbered from 0 to 31 and bit 0 is the right most bit.

SMPU3:
If UNIT TYPE is "SMPU3":

- CONFIGURATION cannot be "SM2000",
- DLI CLI for CONTROLLER 0 and CONTROLLER 1 must be entered,
- MH 0/MH 1 CLI for SG0/SG1 must not be entered,
- TSICOM 0 CLI/TSICOM 1 CLI must not be entered,
- LOCAL DSU VERTICAL must be entered.
- the bit number 7 (processor speed-up) of the IMPU CLI 0/1 must be set, where the bits are numbered from 0 to 31 and bit 0 is the right most bit.

When UNIT TYPE is "SMPU2" or "SMPU3", and SMP23CDM is not equipped, NUMBER OF MEM BOARDS must be entered and BRD0 through BRD5 CLI cannot be entered.

SMPU4:
If UNIT TYPE is "SMPU4/MCTU2":

- CONFIGURATION must not be "SM2000",
- LOCAL DSU VERTICAL must be entered,
- LDSU CLI for CONTROLLER 0 and CONTROLLER 1 must be entered,
- TSICOM 0 CLI/TSICOM 1 CLI must not be entered,
- DLI CLI for CONTROLLER 0 and CONTROLLER 1 must be entered,
- MH 0/MH 1 CLI for SG0/SG1 must not be entered.

SM2000:
If UNIT TYPE is "SM2000":

- BRD4 CLI and BRD5 CLI for CONTROLLER 0 and CONTROLLER 1 must not be entered,
- if EQSTATUS is "O" for new offices, BRD0 CLI for CONTROLLER 0 and CONTROLLER 1 must be entered.
- CONFIGURATION must be "SM2000" or "2KPPC".
- NUMBER OF MEM BOARDS must not be entered,
- TSICOM 0 CLI and TSICOM 1 CLI must be entered,
- LDSU CLI on CONTROLLER 0 and CONTROLLER 1 must not be entered,
- LOCAL DSU VERTICAL must not be entered,
- DLI CLI for CONTROLLER 0 and CONTROLLER 1 must not be entered,
- MH 0/MH 1 CLI for SG0/SG1 must be entered,
- SM USAGE must be "IM" or "ORM" (5E9(2) only),

Copyright © 2006 Lucent Technologies

- SM USAGE must be "IM", "ORM", or "HIM" (5E10 and later),
- the EQCORE form must have CM VINTAGE set to 2,
- at least one EQNLI form (5853 Record) must be entered with EVEN NLI set to 0,
- the TMS LNK entry on the EQTMSLINK (5850 Record) form must match an EVEN/ODD NLI TMS LINK 0 value entered or an EVEN/ODD NLI TMS LINK 1 value derived on an EQNLI form,
- at least one pair of EQTSI forms must be entered with TSI BOARD set to 0,
- the SM value can only be entered on the following equipment forms:

  EQCI

  EQDCTU(5E9(2) only)

  EQDI

  EQDNUS

  EQDSC3

  EQDS

  EQDSP (where DSU is not 0)

  EQDSP2

  EQDU/EQDUP

  EQIDCU(5E10 and later)

  EQIFAC(5E10 and later)

  EQISAP(5E10 and later)

  EQISLU(5E10 and later)

  EQLU

  EQLUP

Copyright © 2006 Lucent Technologies

EQMH

EQMMSP/EQMSP

EQMSU

EQMTIB(5E10 and later)

EQNLI

EQPSU (5E10 and later)

EQPSUPH(5E10 and later)

EQRA(5E10 and later)

EQSITE

EQSTE

EQTSI

EQTU (5E10 and later)

EQTUP(5E10 and later)

EQVT

5E10 and later:
If UNIT TYPE is "SM2000":

- on the corresponding EQPSU form(s), DI0/DI1 PSU TSIU TIMESLOTS must not be entered. It is not necessary to provision PSU TSIU TIMESLOTS on an SM-2000 class processor.
- if EQSTATUS is "O" and IMPU0 and IMPU1 are not 4 in a new office, BRD0 CLI for CONTROLLER 0 and 1 must be entered.
- memory boards must be equipped contiguously.

The maximum number of Network Side Timeslots for an SM-2000 can not be exceeded. The number of

available Network Side Timeslots may be found as follows:

- If UNIT TYPE is "SM2000" and SM USAGE is "ORM" on the EQIM form, then the maximum number of Network Side Timeslots is (512 * the number of EQNLI forms with the same SM).
- If UNIT TYPE is "SM2000" and SM USAGE is not "ORM" on the EQIM form, then the maximum number of Network Side Timeslots is (512 * 2 * the number of EQNLI forms with the same SM).

The following forms use Network Side Timeslots as indicated:

- PSISM - Count 1 for each time SM on the EQIM form matches SM on the EQPSU form, and SM on the EQPSU form matches SM on the PSISM form.
- PSISM - Count 1 for each time SM on the EQIM form matches SM on the EQPSU form, and SM on the EQPSU form matches MATE SM on the PSISM form.
- TRUNK - For all TRUNK forms where the associated TRKCLS on the TKGRP form is "PKTPIPE" and TRKOE[1,3] matches the SM value on the EQIM form, count 1 for each

  PACKET PIPE MEMBER TRUNKS TGN/MEMB list entry (up to 8 entries for each TRUNK form are possible) if TRKOE[1,3] on the TRUNK form is not equal to DEN[1,3] on other associated TRUNK forms, newTRUNK, where PACKET PIPE MEMBER TRUNKS TGN/MEMB matches newTRUNK TGN and newTRUNK MEMB.

  Note: All PACKET PIPE MEMBER

  TRUNKS on a TRUNK form will have the same value for DEN[1,3] on the associated newTRUNK forms.

  Also, count 1 for each time SM on the EQIM form matches DEN[1,3] on the newTRUNK form, for each PACKET PIPE MEMBER TRUNKS entry found above, where TRKOE[1,3] for the original "PKTPIPE" TRUNK (TRUNK forms where the associated TRKCLS is "PKTPIPE") is not equal to DEN[1,3] on new TRUNK.

5E10 and later:
If UNIT TYPE is "MCTU3":

- NUMBER OF MEM BOARDS must be blank.
- MODULE PROCESSOR VERT must be 15.
- when the CLI for IMPU0 indicates this SM is the second SM in a cabinet, MODULE PROCESSOR VERT must be 41.

5E11 and later: If UNIT TYPE is "SM2005":

- CONFIGURATION must be "SM2000",
- NUMBER OF MEM BOARDS must be blank,
- TSICOM 0 and TSICOM 1 CLIs must be entered,

- MHO SG0 and MHO SG1 CLIs must be entered,
- SM USAGE must be "HIM", "IM", or "ORM",
- when EQSTATUS is "O" in a new office, BRD0 CLI for CONTROLLER 0 and CONTROLLER 1 must be entered,
- Memory Boards must be equipped contiguously,
- BRD2, BRD3, BRD4 and BRD5 CLIs for CONTROLLER 0 and CONTROLLER 1 must not be entered,
- LDSU CLI on CONTROLLER 0 and CONTROLLER 1 must not be entered,
- LOCAL DSU VERTICAL must not be entered,
- MODULE PROCESSOR VERT must be 15.

5E15 and later:

When UNIT TYPE is "MCTU3", SM USAGE must be "RSM" for an office equipped with a CM3.

When at least one EQIM form (5700 Record) exists with the UNIT TYPE set to "SM2000", the CLI value on the EQTMS form should be entered.

For 5E16(2) FR5, when UNIT TYPE is "SM2000" and bit 8 of IMPU CLI is entered, CONFIGURATION must be "2KPPC"

5E16(2), 5E18(1) and later:

When an office is equipped with a CM3, UNIT TYPE must be either "SM2000" or "SM2005", or SM USAGE must be "RSM" .

When UNIT TYPE is SM2000, BRD CLI must be 2, 4, or 8.

When UNIT TYPE is "SM2000" and bit 8 of IMPU CLI is not entered, CONFIGURATION must be "SM2000".

When UNIT TYPE is "SM2000", bit 3 (from 0) of IMPU CLI is invalid when COREPPC (bit 8) is not present.

When UNIT TYPE is "SM2000", "SM2005", or "SMU6", PI SG0 TYPE and PI SG1 TYPE cannot be "PI1".

The CORE700 class of SM2000 has certain combination of bits which can be used together and certain combinations which can not.

When UNIT TYPE is "SM2000" or "SM2005" on this form (EQIM), and VCDX OFFICE on the EQCORE form is set to "Y", then the TSICOM 0 CLI and TSICOM 1 CLI entries must be be 3, 13, 23, or 33 hex

SM2005
If UNIT TYPE is "SM2005"::

When UNIT TYPE is "SM2005" and bit 8 of IMPU CLI is entered, CONFIGURATION must be "2KPPC".

When UNIT TYPE is "SM2005" and bit 8 of IMPU CLI is not entered, CONFIGURATION must be "SM2000".

SMU6

Copyright © 2006 Lucent Technologies

If UNIT TYPE is "SMU6"::

DLI CLI on CONTROLLER 0 and CONTROLLER 1 must not be entered.

and bit 8 of IMPU CLI is entered, CONFIGURATION must be "2KPPC".

and bit 8 of IMPU CLI is not entered, CONFIGURATION must be "SM2000".

SM USAGE must be "HIM", "IM", or "ORM".

MH0 SG0 CLI and MH0 SG1 CLI must be entered.

TSICOM 0 and TSICOM 1 must be entered.

SM MEMORY BRD CLIs must not be entered.

and bit 16 of SMPU CONTROLLERR 0 and SMPU CONTROLLER 1 is set to 1, and MODULE PROCESSOR VERT must be between 25 and 66.

and bit 16 of SMPU CONTROLLERR 0 and SMPU CONTROLLER 1 is set to 0, and MODULE PROCESSOR VERT must be between 0 and 24.

When UNIT TYPE is "SMU6", then TSICOM 0 CLI and TSICOM 1 CLI must be 29 hex.

When UNIT TYPE is "SMU6", then IMPU (CONTROLLER 0) and IMPU (CONTROLLER 1) must be 100h.TSICOM 0 CLI and TSICOM 1 CLI must be 29 hex. When UNIT TYPE is "SM2000" or "SM2005", then bit 16 of IMPU (CONTROLLER 0) and IMPU (CONTROLLER 1) must not be set

When UNIT TYPE is "SM2000", "SM2005", or "SMU6", only then can UNIT OFFSET value be greater than 17 on the EQDSC3 and EQGDSC3 forms (5852,5860 Records).

When UNIT TYPE is "SM2005" or "SMU6", .then the corresponding SM on the EQDSC3 form with UNIT OFFSET values between 18 and 23 must satisfy the following conditions:

EQUIPMENT AISLE on the EQIM form must equal AISLE on the EQDSC3 form.

MODULE PROCESSOR VERT on this form (EQIM) must equal VERTPOS on the EQDSC3 form.

BAY on the EQDSC3 form must be 0.

If this is an AWS (AT&T Wireless Service) office, the UNIT TYPE must be "SM2000", SM2005", or "SMU6".

2.15 NUMBER OF MEM BOARDS

Description: Enter the number of memory boards in each controller of the SM. This field specifies the number of memory boards equipped in an SMPU2 and SMPU3 and should be blank for SMPU4 or an SM-2000 class processor. SMPU4 and SM-2000 memory boards are equipped using the SM MEMORY CONFIGURATION FOR SMPU4/SM2000 field group.

Refer to Figures 1, 2, and 3 for additional memory board configuration information. Also refer to the 5ESS Switch Administration and Engineering Guidelines (235-070-100) for SM Resource Utilization (Switching Module Processor and Switching Module Memory) for more detailed information.

NOTE: For 2Mb boards, a maximum of 12 boards may be entered; for 4Mb boards, a max of 8

boards may be entered.
Valid Entries:
For 5E8 and earlier: 1 - 12
For 5E9(1) and later: 0 - 12

Data Rules:

For 5E5 and later, if UNIT TYPE is "SMPU4", this field must be blank and fields under the SM MEMORY CONFIGURATION FOR SMPU4 field group must be entered.

2.16 PI SG 0 EQSTATUS

Description: Enter the equipment status of Service Group 0 of the Packet Interface sub-unit if it is equipped on this SM; otherwise, leave blank.

Software Release: 5E3 and later
Valid Entries:

Valid PI SG 0 EQSTATUS Entries

Entry	Definition
U	Unequipped.
G	Growth.
O	Operational.

Data Rules:

An entry is allowed here only if UNIT TYPE is "SMPU3", "SMPU4", "SM2000", "MCTU3", or "SM2005"

New offices and SMs being added for factory testing require the Operational status. During off-line ODA database retrofits, values other than "O" are allowed.

For new offices and equipment additions, when PI SG 0 EQSTATUS is "O", CONFIGURATION must be "LOADED" for 5E9(1) and earlier. For 5E9(2) and later, CONFIGURATION must support Packet Interface, see the table for Configurations for Facilities and Applications.

This field must be "O" if there is a PSU (J5D003BL) equipped on the SM.

For 5E10 and later:

Packet Interface units may only be specified for a UNIT TYPE of "SMPU3", "SMPU4", "MCTU3", "SM2000", "SM2005", and "SMU6".

In new offices and equipment additions, if PI SG 0 EQSTATUS is "O", then CONFIGURATION must be "SMPU2", "SMPU3", "LOADED", or "SM2000" to support Packet Interface.

2.17 PI SG0 TYPE

Description: Enter the MCTSI (Module Controller/Time Slot Interchange) Unit Packet Interface Type for Side 0.

Software Release: 5E10 and later.
Valid Entries:

Valid PI SG0 TYPE Entries

Entry	Definition

PI1	MCTSI Packet Interface 1
PI2	MCTSI Packet Interface to Subunit Model 2, the enhanced PSU-2 (Packet Switching Unit-2). This value supports the CDMA (Code Division Multiple Access) feature. For more information on this feature see Division 2, Section 8B.

Data Rules:

If PI SG0 EQSTATUS is entered, PI SG0 TYPE must be entered.

If PI SG0 EQSTATUS is not entered, PI SG0 TYPE must not be entered.

If CONFIGURATION is "SM2000", then PI SG0 TYPE and PI SG1 TYPE cannot be "PI1".

For 5E10 and later, when EQIM forms have PI SG0 TYPE and/or PI SG1 TYPE set to "PI2", PSU TYPE on the corresponding EQPSU form must not be "PSU1".

2.18 PI SG 1 EQSTATUS

Description: Enter the equipment status of Service Group 1 of the Packet Interface sub-unit if it is equipped on this SM; otherwise, leave blank.

Software Release: 5E3 and later
Valid Entries:

Valid PI SG 1 EQSTATUS Entries

Entry	Definition
U	Unequipped.
G	Growth.
O	Operational.

Data Rules:

New offices and SMs being added for factory testing require the Operational status. During off-line ODA database retrofits, values other than "O" are allowed.

For new offices and equipment additions, when PI SG 1 EQSTATUS is "O", CONFIGURATION must be "LOADED" for 5E9(1) and earlier. For 5E9(2) and later, CONFIGURATION must support Packet Interface, see the table for Configurations for Facilities and Applications.

An entry is allowed here only if the UNIT TYPE is "SMPU3" or "SMPU4".

For 5E10 and later:
Packet Interface units may only be specified for a UNIT TYPE of "SMPU3", "SMPU4", "MCTU3" and "SM2000".

In new offices and equipment additions, if PI SG 1 EQSTATUS is "O", CONFIGURATION must be "LOADED" or "SM2000" to support the Packet Interface.

2.19 PI SG1 TYPE

Description: Enter the MCTSI (Module Controller/Time Slot Interchange) Unit Packet Interface Type for Side 1.

Software Release: 5E10 and later.
Valid Entries:

Valid PI SG1 TYPE Entries	
Entry	**Definition**
PI1	MCTSI Packet Interface 1
PI2	MCTSI Packet Interface Subunit Model 2 This value supports the CDMA (Code Division Multiple Access) feature. For more information on this feature see Division 2, Section 8B.

Data Rules:

If PI SG1 EQSTATUS is entered, PI SG1 TYPE must be entered.

If PI SG1 EQSTATUS is not entered, PI SG1 TYPE must not be entered.

If CONFIGURATION is "SM2000", then PI SG0 TYPE and PI SG1 TYPE cannot be "PI1".

2.20 PERCENT OF FREE SM SPACE

Description: This field is used to define the percent of free space for this Switching Module's Static ODD (Office Dependent Data). For ODD data space exceeding 2 megabytes, 30% free space may be excessive (for further information, see the 5ESS Switch Administration and Engineering Guidelines).

Software Release: 5E3 and later
Required Field.
Default: 30
Valid Entries: 6 - 95

NOTE: The percent of free SM space must always be at least 256 Kb. Thus, if 30% is less than 256 Kb, the system will automatically raise the percent of free space to equal at least 256 Kb.

Also, only ODA personnel are allowed to enter the full range of free space values (16 - 95). Regional Engineers are limited to defining only 25 - 40 percent of free space.

SM2000 CLIs

The following Change Level Indicators (fields Section 2.21 - Section 2.25) are applicable to SM-2000 class processors for the MH (Message Handler), the TSICOM (Time Slot Interchanger Common) and TSIS (Time Slot Interchange Slice). For a complete listing of valid CLI values, J-Drawing and list combinations for this field group, see Division 8, Section 1.

For 5E12 and later, the SM-2000 class of processors (see the note following the UNIT TYPE field) have certain combination of bits which can be used together and certain combinations which cannot. There are three ODA data checks (CLI338a,b, and c) which enforce these conditions when populating the IMPU CLI 0/1 field. CLI338a enforces that only valid bits are set. CLI338b enforces the mutual exclusivity of bits 0 and 1. CLI338c enforces that: bit 1 cannot be set; bit 0 must be set for SM2005; bit 2 cannot be set. See the data rules for the IMPU 0/1 CLI fields for more detailed information.

2.21 MH 0 CLI

Description: Enter the Message Handler 0 CLI.

Software Release: 5E9(2) and later
Valid Entries: 0 - 7ffffffff (hexadecimal)

Data Rules:

If UNIT TYPE is "SM2000":

- this field must be entered
- for 5E10 and later, the MH 0 CLI and MH 1 CLI entries must be 0 for Release 1, on an SM-2000 class processor.

2.22 MH 1 CLI

Description: Enter the Message Handler 1 CLI.

Software Release: 5E9(2) and later
Valid Entries: 0 - 7ffffff (hexadecimal)

Data Rules:

If UNIT TYPE is "SM2000":

- this field must be entered
- for 5E10 and later, the MH 0 CLI and MH 1 CLI entries must be 0 for Release 1, or 1 for VCDX on an SM-2000).

For 5E16(2) FR 5 and later, when bit 8 of IMPU CLI for CONTROLLER 1 is 1, the MH1 CLI must have bit 2 set to 1.

2.23 TSICOM 0 CLI

Description: Enter the TSI COMMON 0 CLI.

Software Release: 5E9(2) and later
Valid Entries: 0 - 7ffffff (hexadecimal)

Data Rules:

If UNIT TYPE is "SM2000", this field must be entered.

For 5E10 and later:
For a VCDX office on an SM-2000 class processor, TSICOM 0 CLI must be 3 when a TSIU4 is used; it must be 13 when a TSIU4-2 is used.

2.24 TSICOM 1 CLI

Description: Enter the TSI COMMON 1 CLI.

Software Release: 5E9(2) and later
Valid Entries: 0 - 7ffffff (hexadecimal)

Data Rules:

If UNIT TYPE is "SM2000", this field must be entered.

For 5E10 and later:

Copyright © 2006 Lucent Technologies

For a VCDX office on an SM-2000 class processor, TSICOM 0 CLI must be 3 when a TSIU4 is used; it must be 13 when a TSIU4-2 is used.

2.25 TSIS CLI

Description: The Timeslot Interchange Slice CLI is a Recent Change Only field.

Software Release: 5E9(2) and later

EEC OPTIONS

2.26 EEC SM

Description: The EEC SM field is used to display whether or not external echo canceler ethernet links are equipped on the SM (Switching Module).

EQUIPMENT CLI'S CONTROLLER 0/1

The Change Level Indicators applicable to various pieces of equipment (fields Section 2.27 - Section 2.30) are presented under each of two Controllers, 0 and 1. For a complete listing of valid CLI values, J-Drawing and list combinations, see Division 8, Section 1.

2.27 IMPU

Description: Enter the Switching Module Processor Unit CLIs. Refer to Figures 1, and 2 for dependencies between IMPU CLI and CONFIGURATION fields.

Required Fields.
Valid Entries: 0 - 7ffffff (hexadecimal)

Data Rules:

For 5E12 and later,

only the following bits are valid: bit 0, 1, 2, 3, 6, and 28.

either bit 0 or bit 1 must be set; however, bit 0 and bit 1 cannot be set simultaneously for "SM2000".

bit 1 cannot be set and bit 0 must be set for "SM2005", and bit 2 cannot be set.

For 5E16(2) FR 5, when bit 8 of the IMPU CLI for CONTROLLER 0 or CONTROLLER 1 is 1, then CONFIGURATION must be "2KPPC".

When bit 8 of the SMPU CONTROLLER 0/1 CLI is set, the corresponding EQMH forms (5856 Records) must have bit 2 of the MH SIDE 0/1 CLI also set.

When bit 8 of IMPU CLI for CONTROLLER 0 is 1, the MH0 CLI must have bit 2 set to 1.

For 5E16(2) FR 6 and later, when bit 8 of CLI IMPU0 and CLI IMPU1 is entered, then SM MEMORY BRD CLIs for UNIT TYPE "SM2000" and "SM2005" must not be entered.

2.28 DLI

Copyright © 2006 Lucent Technologies

Description: Enter the Dual Link Interface CLIs.

For a complete listing of valid CLI values, J-Drawing and list combinations, see Division 8, Section 1.

Required Fields.
Valid Entries: 0 - 7fffffff (hexadecimal)

Data Rules:

For 5E9(2) and later:
If "RSM" or "ORM" is NOT entered, and UNIT TYPE is not "SM2000" the CLI values for one or both of the DLI assignments must be 01, 02, 05, 08, 10, 20, 80, 100. 200, 800200, 800600.

If this is a VCDX office, CLI value must be 800.

If SM USAGE equal to "ORM" and UNIT TYPE is not"SM2000" CLI values for one or both of the DLI assignments on the EQIM form must be 0, 1, 2, 5, 8, 10, 20, 80, 100, 200, 800, 800200, or 800600.

2.29 LDSU

Description: Enter the Local Digital Service Unit CLIs. For a complete listing of valid CLI values, J-Drawing and list combinations, see Division 8, Section 1.

Required Fields.
Valid Entries: 0 - 7fffffff (hexadecimal)

Data Rules:

When UNIT TYPE is "SM2000", the LDSU CLI must be blank.

The CLI hexidecimal values for the LDSU assignment0, 1, 3, and 800009.

2.30 BSTR

Description: Enter the Bootstrap Board CLI. The BSTR only appears under Controller 0.

Required Field.
Valid Entries: 0 - 7fffffff (hexadecimal)

Data Rules:

"LOADED" must be entered if one of the following exists for the SM: an EQISLU form (5731 Record) with COMMON CONTROL EQST field equal to "O"; an EQRISLU form with COMMON CONTROL EQST field equal to "O"; an EQDCLU5 form (5808 Record) with CC EQSTAT field equal to "O"; an EQPSU form (5741 Record) with COMMON CONTROL EQST field equal to "O"; an EQRA form (5821 Record) with RAF SERVICE TYPE equal to "CTR" or "DTA", or an EQISTF form (5823 Record).

For 5E5 and later, the value "BASIC" is added. A "BASIC" SM is the same as a "STANDARD" SM with the following exceptions:

- A trunk member may not reside on the SM if it belongs to a trunk group defined on a TKGRP form (5202 Record) with the INPULSING and OUTPULSING fields set to "CCIS6" (non-ISDN Common Channel Signaling).

Copyright © 2006 Lucent Technologies

- The DSNOPT? field on the OFCOPT form (5509 Record) may not be set to "Y", which indicates a Defense Switched Network office.
- A trunk member may not reside on the SM if it belongs to a trunk group defined on a TKGRP form where the TRKCLS field is set to "RMSD3" (Remote Measurement System Device 3, used in TOPAS). TOPAS is the Testing, Operations, Provisioning and Administration System centralized operation for toll offices.
- A CKT TN defined on a DSLUSR form (5908 Record) or a TN defined on a LINE form (5109 Record) may not reside on the SM if it is assigned a Precedence and Preemption feature on a LINEFA form (5112 Record), CLUSTR form (5600 Record) or BFG form (5625 Record).

SM CONFIGURATION

The following fields (Section 2.31 - Section 2.34) describe the Switching Module configuration.

2.31 CONFIGURATION

Description: Enter the Switching Module configuration to support various switch services.

Refer to Figures 1, 2, and 3 for additional information.

Software Release: 5E4(2) and later
Required Field.
Default: STANDARD
Valid Entries:

Valid CONFIGURATION Entries

Entry	Definition
2KPPC	Software Release 5E16(2) FR 5. This value supports the MHPPC feature. For more information, see Division 2, Section 8AP.
B or BASIC	Includes all analog features, but excludes OSPS, TOLL, and Government features, with the exception of two OSPS features: C-ACD (Commercial-Automatic Call Distributor) and ASHDN (Analog Shared DN).
ST or STANDARD	Includes all of the "Basic" programs, including analog features for OSPS, TOLL, and Government applications.
L or LOADED	Includes all of the "Basic" and "Standard" programs, plus features which provide ISDN services. An SM's configuration may be specified as "LOADED" even when the SM is NOT currently equipped with ISDN hardware
SI or SIGNALING	Software Release 5E11 and later:
SM or SM2000	Software Release 5E9(2) and later: Includes "most" of the "Loaded" SM features except OSPS, and includes all ISDN features. OSPS features are not allowed to initiate from SM-2000 (no operator position interface), but an SM-2000 class processor can be used for trunking purposes.

Data Rules:

When CONFIGURATION is "LOADED" and the UNIT TYPE is "SMPU2" or "SMPU3", the CLI for IMPU0 must indicate SMP12 or SMP23.

For 5E9(2) and later:
In new offices and equipment additions, PI SG 0 EQSTATUS must be "O" when CONFIGURATION has a value which supports Packet Interface. (See the table Configurations for Facilities and Applications.)

For ISDN SMs, the ISDNOPT form (5941 Record) must be entered and SENSOR ID 1 and SENSOR ID 2 on the ISDNOPT form must be entered and must be greater than 0.

For 5E10 and later, when CONFIGURATION is "SM2000", PI SG0 TYPE and PI SG1 TYPE cannot be "PI1".

For 5E16(2) FR 5:

When CONFIGURATION is "2KPPC", bit 8 of IMPU CLI for CONTROLLER 0 and CONTROLLER 1 must be 1.

When bit 8 of IMPU CLI for CONTROLLER 0 and CONTROLLER is 1, bits 3, 5, 11, and 12 must also be 1.

When bit 8 of IMPU CLI for CONTROLLER 0 and CONTROLLER 1 is 1, bits 0 and 1 must be 0.

When bit 8 of IMPU CLI for CONTROLLER 0 and CONTROLLER 1 is 1, BRD0 CLI for CONTROLLER 0 must be unknown.

When bit 8 of IMPU CLI for CONTROLLER 0 and CONTROLLER 1 is 1, MH0 SG0 CLI must have bit 2 set to 1.

The number of trunks which use incoming "ISUP7" signaling for a particular SM with CONFIGURATION set to "SM2000" or "2KPPC" must be less than 24192.

The number of trunks which use incoming "ISUP7" signaling for a particular SM with CONFIGURATION other than "SM2000" or "2KPPC" must be less than 480.

2.32 SM RETROFIT

Description: For 5E5 and later, this field is a Recent Change only field. It indicates which CONFIGURATION to assign a Switch Module when an office retrofits to a new Software Release. Field values are 0, 1, and 2.

For 5E5 and later, the following table illustrates the implications of the SM RETROFIT values:

CONFIGURATION PRE-RETROFIT	SM RETROFIT VALUE	CONFIGURATION POST-RETROFIT
STANDARD	0	STANDARD
STANDARD	1	BASIC
STANDARD	2	LOADED
LOADED	0	LOADED
LOADED	1	BASIC
LOADED	2	STANDARD
BASIC	0	BASIC
BASIC	1	STANDARD
BASIC	2	LOADED

2.33 STAND ALONE

Description: Has the Stand Alone feature been purchased?

The Stand Alone feature allows an SM, when the communication link with the host office is not functional, to continue to process intramodule calls and to optionally reroute an intermodule call to an announcement and to optionally reroute an emergency call.

Without the Stand Alone feature, the SM will route every call origination to reorder.

Software Release: 5E5 and later

Copyright © 2006 Lucent Technologies

Valid Entries: Y, N

Data Rules:

If the SM USAGE field is set to "IM" or "HIM", then this field must be entered.

If the SM USAGE field is set to "ORM", "RSM", or "TRM", then this field must not be entered. The STAND ALONE PURCHASED? field on an EQSITE form (5722 Record) should be entered.

If the SM value appears in the LOCAL SM field on an EMRNM form (5108 Record) and the RI field has an entry, then this field must be "Y".

If the SM value appears in the LOCAL SM field of ten or more EMRNM forms, then this field must be "Y". If the SM value appears in the LOCAL SM field of an EMRNM form where the EMER TN entry contains an asterisk (*) or asterisks, then this field must be "Y".

For 5E9(1) and later, if a TGN defined with TRKCLS of "TCITT" on the TKGRP form (5202 Record) and is defined as an RSM (Remote Switching Module) on the EQIM form with STAND ALONE set to "Y" or the associated EQSITE form (5722 Record) has STAND ALONE PURCHASED set to "Y", then the corresponding TRUNK form must have REMOVE TRUNK set to "Y".

2.34 STAND ALONE BILLING

Description: Has Stand-Alone Billing been purchased?

The Stand-Alone Billing feature allows an SM, when the communication link with the host office is not functional, to store billing data. If the Stand-Alone Billing feature is not purchased, the amount of memory to store billing information is 50KB. If the feature is purchased, all the spare memory in the SM is used to store the information.

Software Release: 5E5 and later
Valid Entries: Y, N

Data Rules:

If the SM USAGE field is set to "IM" or "HIM", then this field must be entered. If the SM USAGE field is "ORM", "RSM", or "TRM", this field must not be entered. For 5E9(1) and earlier, if "Y" is entered in this field, the STAND ALONE BILLING field must be set to "Y".

RTCD OPTIONS

2.35 BILL SM

Description: The BILL SM field is used to display whether or not the SM supports a RTCD ethernet link to a billing collector system. For more information, see Division 2, Section 4A245.

Software Release: 5E12 and later
Default: N
Valid Entries: Y, N

SM MEMORY CONFIGURATION FOR SMPU4/SM2000

Valid with 5E5 and later Software Releases, the following fields (Section 2.36) are used to equip an MCTU2 SM with a mix of 4, 8, and 16 megabyte memory boards for Controllers 0 and 1. For 5E9(2) and later with

SM-2000, a 32 megabyte board was added.

The BRDO through BRD5 CLI fields can only be entered if the UNIT TYPE is "SMPU4/MCTU2", or, for 5E9(2) and later, if UNIT TYPE is an SM-2000 class processor. For UNIT TYPE of "SM2000", only BRD0 - BRD3 CLIs are equipped; for UNIT TYPE of "SM2005", only BRD0 - BRD1 CLIs are equipped.

For 5E9(1) and earlier for non-VCDX offices, when the UNIT TYPE is "SMPU4", BRD0 CLI must be entered for Controllers 0 and 1. Memory board zero side 0 and side 1 (circuit positions 30h and 50h) cannot be populated in a VCDX office. These circuit positions are needed by the VCDX Ethernet. Circuit positions for memory boards must begin at 31h for side 0 and 51h for side 1. For VCDX and non-VCDX offices, the memory boards must be equipped contiguously.

2.36 BRD0 through BRD5 CLI

Description: Enter the CLI value for a 4, 8, 16, or 32 megabyte memory board. See Figures 1, 2, and 3, for additional information.

Software Release: 5E5 and later
Valid Entries:

Valid CLI Entries

Entry	Definition
200	4-MB memory board (TN1374).
4000	8-MB memory board (TN1376).
20000	Software Release: 5E6 and later: 16-MB memory board (TN1661).
02	Software Release: 5E9(2) and later: 32-MB memory board (TN1685).
04	Software Release: 5E10 and later: 64-MB memory board (TN1806).

Data Rules:

5E9(2) and later:
Memory Boards for a UNIT TYPE of "SMPU4" must be equipped contiguously.

For a VCDX (Very Compact Digital Exchange) office:

- MEMORY BOARDS BRD0 CLI must not be specified.
- MEMORY BOARDS BRD1 CLI must be specified.

If the office is not a VCDX and UNIT TYPE is "SMPU4", MEMORY BOARDS BRD0 CLI must be specified.

For 5E10 and later:
For VCDX at an SM-2000 office, MEMORY BOARDS BRD0 CLI must not be specified.

When bit 8 of IMPU CLI for CONTROLLER 0 or CONTROLLER 1 is 1, BRD0 CLI for CONTROLLER 0 and CONTROLLER 1 must be unknown.

2.37 OPSM

Description: This field is used to identify an OSPS Positional SM, so data can be built automatically for installation testing on new OSPS offices. After the testing is complete, the data will be removed unless a request is made to keep it.

Copyright © 2006 Lucent Technologies

Software Release: 5E6 and later
Default: N
Valid Entries: Y, N

Data Rules:

OSPS positions are assigned to ports that include the SM number on the OSPSOP form (5401 Record). Regular positions are assigned to LCENs and Interflow positions are assinged to DENs. For 5E7 and later, "Y" must be entered in the OSPS PSM field, if an OSPS position is assigned to this SM. However, "N" must be entered if OSPS positions are not assigned to this SM. The first three digits of the LCEN or DEN fields on the OSPSOP form match the SM number on the EQIM form.

For 5E7 and later, if OSPS PSM is set to "Y" and SM USAGE is set to "RSM", then it must be the only SM in the cluster.

For 5E8 and later,

- **WARNING:** If "Y" is entered then PSM (Position Switching Module) circuits should be located in the SM. PSM circuits are the following:

PSM Circuits

Circuit	Form	Field	Entry
Interflow pseudo operator trunks	TKGRP	TRKCLS	"IFOPER"
OSPS Directory Assistance Operator circuits	OSPSDSL	SERVICE CLASS	"DAOPER"
OSPS Directory Assistance Service Computer Data Link	OSPSDSL	SERVICE CLASS	"DASC"
OSPS Administrative Processor Data Link	OSPSDSL	SERVICE CLASS	"OAP"
OSPS Remote Alarm Section Data Link	OSPSDSL	SERVICE CLASS	"RAS"
OSPS Toll and Assistance Operator circuits	OSPSDSL	SERVICE CLASS	"TAOPER"

Navigation help:
To determine if there are any "IFOPER" trunks located in the SM find all of the TRUNK forms that assign trunks in the SM. The EQIM SM points to the first three digits (SM) of the TRUNK DEN. Then check the TKGRP TRKCLS of the trunk group (TKGRP TGN matches TRUNK TGN).

Check the OSPSDSL SERVICE CLASS for the rest of the PSM circuits where EQIM SM points to the first three digits of OSPSDSL LCEN (SM).

For 5E9(2) and later, when OSPS PSM is "Y", CONFIGURATION must support OSPS. (See the table Configurations for Facilities and Applications.)

For 5E16(2) FR5, when OSPS PSM is "Y", CONFIGURATION must support OSPS and CONFIGURATION must be "LOADED", "SIGNALING", "SM2000", or "2KPPC".

IWG OPTIONS

2.38 VTOA SM

Description: This field indicates whether or not Voice Telephony over ATM (Asynchronous Transfer Mode) ethernet links are equipped on the SM (Switching Module). This is a no change field.

Software Release: 5E15 and later

BASIC CONFIGURATION

IMPU CLI Bit (hex)	Memory Board Size (in Megabytes)	Type of SM Processor	Maximum Boards Allowed	SMPU MODEL NUMBER Field
2	2	SMP1	8	1,2,3
2	2	SMP12	12	2,3
200	4	SMP1	4	1,2,3
200	4	SMP12	8	2,3
2	2	SMP23	12	2,3
200	4	SMP23	8	2,3

STANDARD CONFIGURATION

IMPU CLI Bit (hex)	Memory Board Size (in Megabytes)	Type of SM Processor	Maximum Boards Allowed	SMPU MODEL NUMBER Field
2	2	SMP12	12	2,3
200	4	SMP12	8	2,3
2	2	SMP23	12	2,3
200	4	SMP23	8	2,3

LOADED CONFIGURATION (Not Recommended)

IMPU CLI Bit (hex)	Memory Board Size (in Megabytes)	Type of SM Processor	Maximum Boards Allowed	SMPU MODEL NUMBER Field
200	4	SMP12	8	2,3
2	2	SMP23	12	2,3
200	4	SMP23	8	2,3

Note: SMP20 SM processor can be equipped with a mix of 4 and 8 megabyte memory boards which are assigned in the fields under the SM MEMORY CONFIGURATION FOR SMPU4.

If the SMP23CDM is equipped, only 32 megabytes of on board memory can be accessed. The maximum addressable memory on a non-SM-2000 SM is 32 megabytes.

Warning: The Loaded Configuration with SMP 12 and 23 Processors is NOT RECOMMENDED because of the maximum memory limit of 32 megabytes for these two processors.

VCDX CONFIGURATION (5E9(2) and later Software Releases)

IMPU CLI Bit (hex)	Memory Board Size (inMegabytes)	Type of SM Processor	Maximum boards Allowed	UNIT TYPE Field
4000000	16	SMP20	5	SMPU4

Figure 1 DEPENDENCIES BETWEEN IMPU CLI AND CONFIGURATION FIELDS 5E8 AND LATER SOFTWARE RELEASES

Data Rules for the forms (and fields) listed in the table below require the corresponding SM to be configured as shown in the CONFIGURATION column. Note: The entry "SM2000" includes all SM-2000 class processors.

FORM	FIELD	FIELD ENTRY	APPLICATION or FACILITY	CONFIGURATION ENTRY	SOFTWARE RELEASE
ACQS	AQEST TEN		4-wire Lines	"STANDARD" "LOADED"	5E8 and later
CLUSTR	FEATURE	PPFD Feature	Precedence and Preemption	"STANDARD" "LOADED"	5E7 and later
DSLUSR	CKT TN FEATURE	PPFD Feature	Precedence and Preemption	"STANDARD" "LOADED"	5E7 and later
DSLUSR	CKT TN FEATURE	PPFD Feature	Precedence and Preemption	"STANDARD" "LOADED"	5E7 and later
EISSM	EIS		External Information System	"LOADED"	5E7 and later
EQDNUS	SM		DNU-S (Digital Networking Unit -	"SM2000"	5E9(2) and later

			SONET)		
EQIDCU	SM		IDCU (Integrated Digital Carrier Units)	"STANDARD" "LOADED"	5E9(1) and later
				"SM2000"	5E10 and later
EQIFAC	SM		IDCU (Integrated Digital Carrier Units)	"STANDARD" "LOADED"	5E9(1) and later
				"SM2000"	5E10 and later
EQISLU	SM		Integrated Services	"LOADED"	5E7 and later
				"SM2000"	5E10 and later
EQLU EQLUP	SM		Line Units	"BASIC" "STANDARD" "LOADED" "SM2000"	5E9(2) and later
EQPSU	SM		Packet Switching Unit	"LOADED"	5E9(2) and later
				"SM2000"	5E10 and later
EQRA	SERVICE TYPE	"CTR"	OSPS Automated Calling Card Services	"LOADED"	5E7 - 5E9(1)
	SVC GRP	"ACCS"			
EQRA	UNIT TYPE	"RAF"	OSPS Automated Calling Card Services and OSPS Announcement Only	"LOADED" "SM2000"	5E9(2) and later
	SERVICE TYPE	"ANN", "DTA", or "CTR"			
	SVC GRP	"ACCS" or "AOC"			
EQRA	UNIT TYPE	"SAS"	Calling Card Services and OSPS Announcement Only	"LOADED" "SM2000"	5E9(2) and later>
	CHANNEL LIST SERVICE	"ANN", "DTA", or "TDEC"			
	SVC GRP	"ACCS" or "AOC"			
EQRISLU	SM		Remote Intergrated Services for Line Units	"LOADED"	5E9(1) and later
EQSTE	SM		DNU-S (Digital Networking Unit - SONET)	"SM2000"	5E9(2) and later
EQVT	SM		DNU-S (Digital Networking Unit - SONET)	"SM2000"	5E9(2) and later
HGRPAS	PKT SM		Packet Switching	"LOADED"	5E7 and later
				"SM2000"	5E10 and later
ISDNOPT	SM		ISDN	"LOADED"	5E7 and later
ISDNOPT	PSN		ISDN	"LOADED"	5E8 and later
ISDNOPT	SUBNET ID SUBNET CNT		ISDN	"LOADED"	5E9(2) and later
				"SM2000"	5E10 and later
LINE	OE TYPE	"T" or "D"	4-wire Lines	"STANDARD" "LOADED"	5E7 and later
LINE	TN	PPFD Feature	Precedence and Preemption	"STANDARD" "LOADED"	5E7 and later
	FEATURE				
MISLINK	SERVICE CLASS	"MISLNK"		"LOADED"	5E9(1) and later
MLHLN	OE TYPE	"T" or "D"	4-wire Lines	"STANDARD" "LOADED"	5E8 and later
MLHLN	TN	PPFD Feature	Precedence and Preemption	"STANDARD" "LOADED"	5E7 and later
	FEATURE				
ODAOPT	HUNDREDS GROUP SM ROUTING	"PRESERVE"	Routing Modules for Hundreds Group	"LOADED"	5E7 and later
				"SM2000"	5E10 and later

Copyright © 2006 Lucent Technologies

	ASSIGNMENT				
OFCOPT	RM RTG RSTRCT		Restricted Routing Module	"LOADED"	5E7 and later
				"SM2000"	5E10 and later
OSPSDSL	SERVICE CLASS	"EIS", "MISLINK", or "RAS"		"LOADED"	5E7 and later
OSPSOPT	OSPS RAF	"Y"	DSU2-RAF for Automated Announcements	"LOADED"	5E7 and later
PRIGRP	FACILITY LIST SM		Primary Rate Interface	"LOADED"	5E9(1) and later
				"SM2000"	5E10 and later
PSISM	SM		Packet Switching	"LOADED"	5E9(2) and later
				"SM2000"	5E10 and later
RTERM	SM		IDCU (Integrated Digital Carrier Units)	"STANDARD" "LOADED"	5E9(2) and later
RTERM	RT INTERFACE	"TR303"	TR303 Remote Terminals	"LOADED"	5E9(2) and later
				"SM2000"	5E10 and later
TKGRP	INPULSING OUTPULSING	"CCIS6"	CCIS6 Signaling	"STANDARD" "LOADED"	5E7 and later
TKGRP	TRKCLS	"DIOR", "FIOPR", "FOPRI", or "INAISTRK"	Incoming AIS Trunks	"STANDARD" "LOADED"	5E7 and later
				"SM2000"	5E10 and later
TKGRP	TRKCLS	"PACKET", "X75", or "X75P"	Packet Switching	"LOADED"	5E8 and later
				"SM2000"	5E10 and later
TKGRP	TRKCLS	"RMSD3"	RMS-D3 Test Device	"STANDARD" "LOADED"	5E7 and later
TKGRPFA	FEATURE	PPFD Feature	Precedence and Preemption	"STANDARD" "LOADED"	5E7 and later
TNICLIST	INIC TNIC		Transit Network Identification	"LOADED"	5E8 and later
				"SM2000"	5E10 and later
TRUNKFA	FEATURE	PPFD Feature	Precedence and Preemption	"STANDARD" "LOADED"	5E7 and later
X75CUG	CUG LIST ID		Packet Switching	"LOADED"	5E8 and later
				"SM2000"	5E10 and later

Figure 2 CONFIGURATIONS FOR FACILITIES AND APPLICATIONS

```
SCREEN 1 OF 4                    5ESS Switch
eqim                     OFFICE DATA ADMINISTRATION
(5700-1/2)               SWITCHING MODULE EQUIPAGE


* 1. SM  ___
                                          8. EQUIPMENT AISLE          ____
  2. SM USAGE              IM            9. LOCAL DSU VERTICAL       __
  3. REMOTE SITE           ___          10. MODULE PROCESSOR VERT    __
                                        11. UNIT TYPE                _____
  4. EQSTATUS              O            12. NUMBER OF MEM BOARDS     __
  5. INTERRUPT STATUS      ALLOW        13. PI SG 0 EQSTATUS         _
                                        14. PI SG0 TYPE              ___
                                        15. PI SG 1 EQSTATUS         _
  6. NCT EVEN LINK         ___          16. PI SG1 TYPE              ___
  7. CTS EVEN LINK         ___          17. PERCENT OF FREE SM SPACE 30
```

```
SCREEN 2 OF 4                    5ESS Switch
eqim                      OFFICE DATA ADMINISTRATION
(5700-1/2)                SWITCHING MODULE EQUIPAGE


      SM2000 CLIs                           EEC OPTIONS
18. MH0 SG0 CLI  ________                    EEC SM N
19. MH0 SG1 CLI  ________
20. TSICOM 0 CLI ________
21. TSICOM 1 CLI ________
    TSIS CLI
```

```
SCREEN 3 OF 4                    5ESS Switch
eqim                      OFFICE DATA ADMINISTRATION
(5700-1/2)                SWITCHING MODULE EQUIPAGE

            EQUIPMENT CLI'S

       CONTROLLER 0   CONTROLLER 1          SM CONFIGURATION
       ------------   ------------          ----------------

IMPU:  23. ________   24. ________      30. CONFIGURATION       STANDARD
DLI:   25. ________   26. ________        SM RETROFIT
LDSU:  27. ________   28. ________      31. STAND ALONE         _
BSTR:  29. ________                      32. STAND ALONE BILLING _

                                           RTCD OPTIONS
                                             BILL SM N
```

```
SCREEN 4 OF 4                    5ESS Switch             _
eqim                      OFFICE DATA ADMINISTRATION
(5700-1/2)                SWITCHING MODULE EQUIPAGE

SM MEMORY CONFIGURATION FOR SMPU4/SM2000

         CONTROLLER 0     CONTROLLER 1
         ------------     ------------

BRD0 CLI 34. ________     40. ________    46. OSPS PSM N
BRD1 CLI 35. ________     41. ________
BRD2 CLI 36. ________     42. ________
BRD3 CLI 37. ________     43. ________
BRD4 CLI 38. ________     44. ________
BRD5 CLI 39. ________     45. ________
```

Figure 3 SAMPLE EQIM FORM 5E14 SOFTWARE RELEASE

```
SCREEN 1 OF 4                    5ESS Switch
eqim                       OFFICE DATA ADMINISTRATION
(5700-1/2)                 SWITCHING MODULE EQUIPAGE


* 1. SM  ___
                                          8. EQUIPMENT AISLE          ____
  2. SM USAGE               IM            9. LOCAL DSU VERTICAL       __
  3. REMOTE SITE            ___          10. MODULE PROCESSOR VERT    __
                                         11. UNIT TYPE                _______
  4. EQSTATUS               O            12. NUMBER OF MEM BOARDS     __
  5. INTERRUPT STATUS       ALLOW        13. PI SG 0 EQSTATUS         _
                                         14. PI SG0 TYPE              ___
                                         15. PI SG 1 EQSTATUS         _
  6. NCT EVEN LINK          ___          16. PI SG1 TYPE              ___
  7. CTS EVEN LINK          ___          17. PERCENT OF FREE SM SPACE 30
```

```
SCREEN 2 OF 4                    5ESS Switch
eqim                       OFFICE DATA ADMINISTRATION
(5700-1/2)                 SWITCHING MODULE EQUIPAGE


      SM2000 CLIs                          EEC OPTIONS
18. MH0 SG0 CLI  _________                  EEC SM N
19. MH0 SG1 CLI  _________
20. TSICOM 0 CLI _________
21. TSICOM 1 CLI _________
    TSIS CLI
```

```
SCREEN 3 OF 4                    5ESS Switch
eqim                       OFFICE DATA ADMINISTRATION
(5700-1/2)                 SWITCHING MODULE EQUIPAGE

            EQUIPMENT CLI'S

       CONTROLLER 0   CONTROLLER 1          SM CONFIGURATION
       ------------   ------------          ----------------

IMPU:  23. _________  24. _________      30. CONFIGURATION       STANDARD
DLI:   25. _________  26. _________        SM RETROFIT
LDSU:  27. _________  28. _________      31. STAND ALONE         _
BSTR:  29. _________                     32. STAND ALONE BILLING _

                                           RTCD OPTIONS
                                             BILL SM N
```

```
SCREEN 4 OF 4                    5ESS Switch            _
eqim                      OFFICE DATA ADMINISTRATION
(5700-1/2)                SWITCHING MODULE EQUIPAGE

SM MEMORY CONFIGURATION FOR SMPU4/SM2000

         CONTROLLER 0     CONTROLLER 1
         ------------     ------------

BRD0 CLI 34. ________     40. ________    46. OSPS PSM N
BRD1 CLI 35. ________     41. ________
BRD2 CLI 36. ________     42. ________     IWG OPTIONS
BRD3 CLI 37. ________     43. ________        VTOA SM _
BRD4 CLI 38. ________     44. ________
BRD5 CLI 39. ________     45. ________
```

Figure 4 SAMPLE EQIM FORM 5E15 AND LATER SOFTWARE RELEASES

SEC. 3: 5701 RECORD
CORE UNITS RECORD - EQCORE

1. GENERAL

The 5701 Record is used to define Core Unit Assignments in a 5ESS Switch office. It is intended to be used as an Office Record for those 5ESS Switch offices that are not utilizing an Operational Support System (e.g., RMAS) for generation of Office Records.

The Core Units Record is used to define the Message Interface Control Unit, Time Multiplexed Switch and Message Interface Control Unit Subunits.

NOTE: Once this form is inserted for a CM3 (Communication Module Model 3) office, the EQCM3 should be the next form inserted. This allows form checks to be performed on the data in regards to an office being CM2 (Communication Module Model 2) or CM3, instead of appearing during the execution of cross checks.

1.1 Recent Change View

The corresponding Recent Change Views for this form is 17.14.

2. FORM ENTRIES

2.1 *KEY

Description: The only acceptable value for this field is zero.
Valid Entries: 0

2.2 VCDX OFFICE

Description: Is this a VCDX office?

Software Release: 5E9(2) and later
Required Field.
Default: N
Valid Entries: Y, N

Data Rules:

When VCDX OFFICE is "Y", the following fields are automatically populated:

- CM VINTAGE is set to 2
- NETWORK CLOCK UNIT CLI is set to 0
- NETWORK CLOCK UNIT CLOCK TYPE is set to "24CHAN2"
- NETWORK CLOCK UNIT OSC TYPE is set to "DOMMED"
- TIME MULTIPLEXED SWITCH CLI is set to 2

and the following must be true:

Copyright © 2006 Lucent Technologies

- VCDX on the ECDOP form must be "Y".
- On the EQIM form (5700 Record):
  - One and only one EQIM form must be entered with SM USAGE set to "IM" and CONFIGURATION set to either "SM2000" or "SIGNALING ".
  - MEMORY BOARDS BRD0 CLI(s) must not be entered.
  - STAND ALONE must be "N".
  - STAND ALONE BILLING must be "Y".
  - OSPS PSM must not be "Y".
  - UNIT TYPE must be "SMPU4".
  - MEMORY BOARDS BRD1 CLI(s) on the EQIM form must be specified, and MEMORY BOARDS BRD[2-5] CLI(s) must be assigned continuously.
  - IMPU EQUIPMENT CLI's for CONTROLLER 0 and/or CONTROLLER 1 must have bit 26 set to 1 (i.e., IMPU EQUIPMENT CLI's of "*x*4*xxxxxx*" where *x* is any valid value).
- On the RALM form (5516 Record):
  - REMOTE MODULE must match the entry of SM on the EQIM form.
  - SM must match the entry for REMOTE SWITCHING MODULE on the EQRAU form and ALARM TYPE on the EQRAU form must be "ASC".
  - ALARM POINT values 0 - 1, 32 - 54, and 100 - 113, must be assigned on the RALM form.
- On the EQRAU form (5705 Record):
  - ALARM TYPE must be "ASC", and REMOTE SWITCHING MODULE must match the value of SM on the EQIM form.
  - ALARM TYPE must be "ASC" and ASC/RAU VERTICAL must be either 69 or 76.
- On the OFCOPT form (5509 Record):
  - ACG FNL TRMT must be "RT".
  - ASI ON must be "N".
  - ASP OFC must be "NONE".
  - COMMON CHAN SIG must be "N".
  - E911 DAS must be blank.
  - E911 OPTION must be "INACTIVE".

Copyright © 2006 Lucent Technologies

- — OFFICE TYPE must be "N".
- — For 5E12 and earlier, DSN OPTION must be "N".
- — For 5E11 and later, APPLICATION PROCESSOR can only be entered as "NO" or "SM".
- — For 5E10 and later, PRODUCT must be "WNC" or "VCDX".

- On the TKGRP form (5202 Record):
  - — LN VIRT cannot be "Y" on any TKGRP form since FTS2000 Network Management Network is not allowed in this office.
  - — For 5E10 and earlier, QUEUE FEATURE cannot be entered since trunk queuing is not allowed in the office.
  - — When TRKCLASS is not "INAISTRK", "LPTDCTU", "LPTISTFL", "LPTISTFX", "RMSD3", or "TOPAS", LOCAL SM must be entered.
  - — HUNT TYPE must not be "UCD", "GUCD", or "BGUCD".
  - — The following TRKCLASS entries are not allowed: "CAMOPKEY", "CAMOPTLK", and "CCIS6".

- The following forms must not be populated:

  EQNLI form (5853 Record).

  EQSITE form (5722 Record).

  RDTAPORT form (5911-A Record).

  RDTATN form (59110-A/B Record).

- ENTITY on the RXSCHD form (5515 Record) must not be 0.
- Since the secured feature ACD BRCS is not allowed in the office, no SFSYS form can exist with field ACT set to "Y" for SFID 121.
- Since the autoplex ECP (Executive Cellular Processor) feature is not allowed in the office, ECP POINT CODE cannot be defined on the APXPARM form (5050 Record).
- For 5E10 and earlier, since simulated facility groups are not allowed in this office, PFASFG forms must not exist.
- For 5E10 and earlier, since no ARS (Automatic Route Selection) feature can be assigned in this office, no TN(s), MLHG/TERM(s) or TGN/MEMB(s) TRUNK GROUP(S) may be assigned an ARS feature on any LINEFA, MLHLNFA, TRUNKFA, TKGRPFA, BFG or an associated CLUSTR form.
- Since polygrid routing is not allowed in a VCDX office, the PPPOLY form cannot be populated.
- For 5E10 and earlier, since no (PFA) Private Facility Access feature can be assigned in this office, no TN(s), MLHG/TERM(s), TGN/MEMB(s), or TRUNK GROUP(S) may be assigned a PFA feature on any

Copyright © 2006 Lucent Technologies

LINEFA, MLHLNFA, TRUNKFA, TKGRPFA, BFG or an associated CLUSTR form.

- The equipment in Figure 2 is not allowed in this office.

When VCDX OFFICE is "Y", and UNIT TYPE is "SM2000":

- MH0 SG0 CLI and/or MH0 SG1 CLI on the EQIM form must have bit 0 set to 1 (i.e., MHO CLI's of "*xxxxxxx*1" where *x* is any valid value).
- IMPU EQUIPMENT CLI's, on the EQIM form, for CONTROLLER 0 and/or CONTROLLER 1 must have bit 1 set to 1.

For 5E11 and later, when VCDX OFFICE is "Y", on the OFCOPT form (5509 Record):

- ASI ON must be "N".
- COMMON CHAN SIG must be "NO" or "PSU".
- E911 DAS must be not entered.
- E911 OPTION must be "INACTIVE".

For 5E11 and later, when VCDX OFFICE is "Y" and TRKCLS on the TKGRP form (5202-1/2 Record) is not in the table that follows, LOCAL SM on the TKGRP form must be known.

For 5E12 and later, when an office is being converted from VCDX to 5ESS-2000, VCDX OFFICE must be "N".

For 5E16(2) and later, when VCDX is set to "Y", one and only one EQIM form (5700-1 Record) must be entered, and CONFIGURATION on the EQIM form must be either "SM2000", "2KPPC", or "SIGNALING".

LOCAL SM Entries	
Software Release: 5E11 and later	
Data Condition	**Trunk Group Definition**
TRKCLS[1,3] = "LTP"	Local Test Port Trunk
TRKCLS = "EDS" and RDTA GRP = "Y"	Extended Digital Subscriber RDTA Trunk TRKCLS = "INAISTRK"
TRKCLS = "RMSD3"	TAT connected to RSM-D3 Trunk
TRKCLS = "TOPAS"	Test Access Trunk - TOPAS Interface

When VCDX OFFICE is "N",

- A dgn (diagnostic) test schedule must be defined on the RXSCHD form for the Administration Module (ENTITY = 0).
- REMOTE SWITCHING MODULE assigned on an EQRAU form or REMOTE MODULE assigned on an RALM form must be defined on the EQIM form or have SM USAGE on the EQIM form set to "RSM", "ORM" or "TRM".
- REMOTE SWITCHING MODULE assigned on an EQRAU form or REMOTE MODULE assigned on an RALM form must be defined on the EQSITE.
- When UNIT TYPE is "SMPU4" on the EQIM, MEMORY BOARDS BRD0 CLI(s) on the EQIM form must be specified and MEMORY BOARDS BRD[1-5] CLI(s) must be assigned continuously.

Copyright © 2006 Lucent Technologies

For 5E10 and later, PRODUCT (on OFCOPT form) is "WNC" or "VCDX", VCDX OFFICE must be "Y". The Wireless CENTREX and Very Compact Digital Exchange applications can be used only with the VCDX hardware configuration.

When VCDX OFFICE is "Y", TSI BOARD 0 and TSI SLOT 2 must not be assigned on the following forms:

EQDI (for 5E10 and later),

EQDNUS and EQPSU (for 5E12 and later) and,

EQPDXU (for 5E14 and later).

For 5E10 and later, when VCDX OFFICE is "Y" and UNIT TYPE is "MCTU3", bit position 26 must not be set for the IMPU CLIs (controllers 0 and 1). When UNIT TYPE is not "MCTU3", bit position 26 must be set for the IMPU CLIs (controllers 0 and 1).

For 5E11 and later, when VCDX OFFICE is "Y", the EQDS form (5470 Record) should not have any tuples entered.

For 5E12 through 5E13, when all of the following conditions are met:

- COMMON CHAN SIG is "ALL" on the OFCOPT form (5509 Record),
- VCDX OFFICE is "Y" on the EQCORE form and
- WB RATE is entered and INPULSING/OUTPULSING is "DCHN" on the TKGRP form (5202-1/2 Record),

LOCAL SM must be entered on the TKGRP form.

For 5E15 and later

When VCDX OFFICE is "N" and CM VINTAGE is 2, EXPANDED CMP/APR must be "CMPMEONLY" or "BOTH".

When either VCDX OFFICE or DRM is "Y":

CLI on the EQTMS form (5866 Record) must be 2.

neither the QPHPIPE form (5544 Record) nor the CMTMH form (6021 Record) can be entered.

a maximum of 8,000 NPOOL forms (5177 Record) may be entered.

When VCDX OFFICE is "Y", APPLICATION on the CCSTCAP form (5567 Record) or APPLIC on the DSAPP form (5537 Record) must not be "LNACP" or "TNAI".

When VCDX OFFICE is "N" and DRM is "N", a maximum of 800,000 NPOOL forms (5177 Record) may be entered .

For 5E16(2) FR 3 and later, when VCDX OFFICE or DRM is set to "Y", ORIG PT CODE for BICC Packet Groups defined on the PKTGRP form (5219 Record) must have a matching OPC or ALIASCP on the CCGSM form 6008 Record).

Copyright © 2006 Lucent Technologies

5E16(2) and later

When VCDX OFFICE or DRM on this form (EQCORE) is set to "Y" and UNIT TYPE on the EQIM form (5700 Record) is "SMU6", then TSICOM 0 CLI and TSICOM 1 CLI on the EQIM form must be 29h or 2bh.

When VCDX OFFICE or DRM on EQCORE form is set to "Y", then DEMO on SIPGSM form must be set to "Y".

2.3 DRM

Description: Is this a Distinctive Remote Module?

For more information on this feature see Division 2, Section 4A525.

Software Release: 5E14 and later
Default: N
Valid Entries: Y, N

Data Rules:

When DRM is "Y", the following fields are automatically populated:

- CM VINTAGE is set to 2
- NETWORK CLOCK UNIT CLI is set to 0
- NETWORK CLOCK UNIT CLOCK TYPE is set to "24CHAN2"
- NETWORK CLOCK UNIT OSC TYPE is set to "DOMMED"
- TIME MULTIPLEXED SWITCH CLI is set to 2

When an office is being converted from a VCDX office,VCDX OFFICE and DRM must both be "N".

When DRM is "N" and CM VINTAGE is 2, EXPANDED CMP/APR must be "BOTH" or "CMPMEONLY".

When DRM is "Y", VCDX OFFICE must be "N".

When PRODUCT on the OFCOPT form is "DRM", DRM on the EQCORE form must be "Y". DRM application can be used only with the DRM hardware configuration.

When DRM is "Y" the following apply:

This table specifies the equipment not allowed in this office:

Form	Condition	Key Fields	Equipment Unit
EQDSP	DIGITAL SERVICE UNIT = 0	IM, DSU, SG	Local DSU1 Model 1
EQDU	DLTU TYPE = "DLTU24"	IM, DLTU	DLTU Model 1
EQDUP	FAC IND = 0 and FAC 0 DFI USAGE != "H1" or "H2"	IM, DLTU, DFIPK	DFI (24) Channel Model 1
EQLU	LINE UNIT TYPE = "4AB1"	IM, LU	Analog Line Unit Model 1
EQLU	LINE UNIT TYPE = "4AC1"	IM, LU	Analog Line Unit Model 2
EQMSP	Any form	IM, MSU, SG	MSU Model 1
PSUGP	PH TYPE = "PH1"	IM, PSU, PSUSHELF	Protocal Handler Model 1
PSUGP	PH TYPE = "PH2"	IM, PSU, PSUSHELF	PSUSHELF Protocal Handler Model 2

Copyright © 2006 Lucent Technologies

On the EQIM form:

One and only one EQIM form must be entered with CONFIGURATION set to "SM2000" or "2KPPC".

STAND ALONE must be "N".

OSPS PSM must not be "Y".

STAND ALONE BILLING must be "Y".

When an SM-2000 class processor is specified,

- MH0 SG0 CLI and MH0 SG1 CLI must be equal to 1 hex or C hex.
- EQNLI form must not be populated.

When UNIT TYPE is "SM2000" or "SM2005",

TSICOM 0 CLI and TSICOM 1 CLI must be 3, 13, 23 or 33 hex.

EQSITE form should not have any forms entered.

When the RALM form is populated, SM on the EQIM form must equal REMOTE MODULE on each RALM form.

TSI BOARD 0 and TSI SLOT 2 must not be assigned on the EQDI form, the EQDNUS form or the EQPSU form. This TSI BOARD and TSI SLOT is reserved in DRM call processing nodes.

EQDS form should not have any forms entered.

ENTITY on the RXSCHD form must notbe zero.

When the RALM form is populated,

REMOTE MODULE on the RALM form must equal REMOTE SWITCHING MODULE on the EQRAU form,

ALARM TYPE on the EQRAU form must be "ASC".

When the EQRAU form is populated,

RAU VERTICAL on the EQRAU form must be either 69 or 76,

ALARM TYPE on the EQRAU form must be set to "ASC",

REMOTE SWITCHING MODULE on the EQRAU form must equal SM on the EQIM form.

On the OFCOPT form:

The fields shown in the following table must be populated as specified:

Field	Value
ASI ON	N
COMMON CHAN SIG	NO or PSU
E911 DAS	unknown
E911 OPTION	INACTIVE

VIRTUAL SWITCH must be "Y".

APPLICATION PROCESSOR can only be entered as "NO" or "SM".

PRODUCT must be "DRM".

OFFICE TYPE must be "N".

Polygrid routing is not allowed in the office. The PPPOLY form cannot be populated.

The secured feature ACD BRCS is not allowed in the office. The SFSYS form cannot exist with SFID 121 set to "Y".

The following TRKCLS entries are not allowed on the TKGRP form. "CAMOPKEY", "CAMOPTLK", "CCIS6"

The FTS2000 Network Management Network is not allowed in this office. LN VIRT cannot be set to "Y" on any TKGRP form.

For 5E15 and later, a maximum of 8,000 NPOOL forms (5177 Record) may be entered

When TRKCLS on the TKGRP form is not in the table below, then LOCAL SM on the TKGRP form must be known.

Data Condition	Trunk Group Definition
TRKCLS[1,3] = "LTP"	Local Test Port Trunk
TRKCLS = "EDSL" and RDTA GRP = "Y"	Extended Digital Subscriber RDTA Trunk
TRKCLS = "INAISTRK"	Incoming Automatic Intercept Trunk
TRKCLS = "RMSD3"	TAT connected to RSM-D3 Trunk
TRKCLS = "TOPAS"	Test Access Trunk - TOPAS

When COMMON CHAN SIG is set to PSU on the OFCOPT form and DRM is set to "Y" on the EQCORE form and INPULSING and/or OUTPULSING is set to "ISUP7" on the TKGRP form, then the LOCAL SM must be entered on the TKGRP form, and LOCAL SM must have a matching GSM on the CCGSM form. Also, when WB RATE is known and INPULSING and/or OUTPULSING is set to "DCHN" on the TKGRP form and DRM is set to "Y" on the EQCORE form, then LOCAL SM must be entered on the TKGRP form, and LOCAL SM must have a matching GSM on the CCGSM form.

For offices where both VCDX OFFICE and DRM are "N":

LOCAL SM must be unknown on the TKGRP form for the TGN that is associated with the terminating SFG.

When TRK DIR is "2W", "INC" or "OUT", TRKCLS is "EDSL" or "EDSLHM" and LOCAL SM is known on the TKGRP form, NET SPEC FAC TYPE must not be "TPOTS" on the TKEDSLD form.

For 5E15 and later, a maximum of 800,000 NPOOL forms (5177 Record) may be entered

Copyright © 2006 Lucent Technologies

When EQIM forms indicate a change in the software configuration of the SM after retrofit, and VCDX OFFICE or DRM is "Y" on the EQCORE form, the SM configuration cannot be changed during retrofit.

When the ENETPIPE form is entered, the corresponding EQIM form must specify an SM-2000 class processor and, if SERV TYPE is "RTCD", the EQCORE form must have VCDX OFFICE and DRM both set to "N".

For 5E15 and later, when DRM is set to "Y", the APPLICATION field on the CCSTCAP form (5567 Record) or the APPLIC field on the DSAPP form (5537 Record) must not be set to "LNACP" or "TNAI".

2.4 CM2 COMPACT

Description: Is this a CM2 Compact office? Note that the location of the CM2 Compact is entered in the EQUIPMENT BAY field below.

Software Release: 5E9(1) and later
Required Field.
Default: N
Valid Entries: Y, N

Data Rules:

For 5E14 and earlier, when CM2 COMPACT is "Y":

- for the EQCORE form (5701 Record)
  - TIME MULTIPLEXED SWITCH CLI must be 20,
  - MSG AISLE and TMS AISLE must be equal,
  - TIME MULTIPLEXED SWITCH AISLE must be unknown.
  - TMS CONFIGURATION must be "SNGL",
  - EQUIPMENT BAY must be entered,
  - TMS SHELF EQUIPAGE must not be entered,
  - CM VINTAGE must be 2,
- for the EQIM form (5700 Record)
  - NCT EVEN LINK must be 2 or 4,
  - CTS EVEN LINK must be 2, 10, 18, 26, 34, 42, 50, or 58,
  - The maximum number of EQIM forms must be 8,
  - The maximum number of EQIM forms with SM USAGE of "IM", "HIM", "TRM" or "ORM" must be 2,
  - The maximum number of EQIM forms with SM USAGE of "RM" must be 6,
- for the ECDOPT form (5706 Record)

Copyright © 2006 Lucent Technologies

— CM TYPE must be "CM2C".

- for the EQTMSLINK form (5851 Record)

  — QLI CLI must be 0.

For 5E11 and later, when an office is being converted from a CDX to 5ESS-2000 office, cm2 compact must be "N".

For 5E15 and later:

When an office is CM3, CM2 COMPACT must be "N".

When CM2 COMPACT is "N":

EQUIPMENT BAY must be blank.

CM2C SM must be blank.

When CM2 COMPACT is "Y", the following data is required for the EQTMS form (5866 Record):

FABRIC TYPE must be "SNGL"

CLI must have a value with bit 5 set (as in 20 hex)

there can be no entries in the SHELF EQUIPAGE - CM2 list

AISLE on the EQTMS form must be equal to MSGS AISLE on the EQCORE form.

QLI CLI must be 0 on all EQTMSLINK forms.

When CM2 COMPACT is "N" and CM VINTAGE is 2:

and SM USAGE is not "ORM" and UNIT TYPE is "SM2000" or "SM2005" on the EQIM form (5700 Record), QLI CLI on all EQTMSLINK forms (5851 Record), must be 100, otherwise QLI CLI must not be 100.

and SM USAGE is "ORM" on the EQIM form, the QLI CLI value on each EQTSMLINK form associated with the SM on this EQIM form, depends on the type of TRCU (Transmission Rate Converter Unit) used in this transmission path. If the TRCU is of type "TRCU3" on the EQTMSLINK form, and UNIT TYPE on the EQIM form is "SM2000" or "SM2005", then QLI CLI must be 100, otherwise QLI CLI must not be 100.

MICU / TMS

The following fields designate Message Interface Control Unit and Time Multiplexed Switch parameters.

2.5 #EQSTATUS

Description: Enter the Status of the Equipment.

Required Field.

Default: O
Valid Entries:

Valid EQSTATUS Entries	
Entry	**Description**
G	Growth.
O	Operational.
U	Unequipped.

Data Rules:

For new offices and units destined for factory testing, "O" (Operational) is the only allowed value. During offline ODA database retrofits, the other values are valid.

2.6 #CM VINTAGE

Description: Enter the Communication Module Vintage number for the office.

Required Field.

Valid CM VINTAGE Entries	
Entry	**Description**
1	CM1.
2	CM2. CM2 allows for the expanded SM range of 1-192. For offices with CM2, both MSG SIZE and TMS SIZE must be 6. For 5E9(1) and later, this value is used for the CDX/CM2C (Compact Digital Exchange).
3	CM3. For 5E15 and later, CM3 replaces the Communication Modules CM1 (Communication Module 1), CM2 (Communication Module 2), CM2C/CDX (Communication Module 2 Compact/Compact Digital Exchange) of the 5ESS switch.

Data Rules:

The CM VINTAGE value entered must be the same as the CM TYPE value entered on the ECDOPT form.

For 5E9(1) and later, when CM VINTAGE is 1, EQUIPMENT BAY on the EQCMTRCU form (5812 Record) must be between 0 and 7.

When CM VINTAGE on the EQCORE form is 2 and EXPANDED CMP/APR is set to "APRONLY" or "BOTH" on the EQCORE form, the bit number 10 (400h) for the CLI must be set on the EQPC form, where the bits are numbered from 0 to 31 and bit 0 is the right most bit.

When "2" is entered, and the CLI is 400 (bit number 10) on the EQPC form, where the bits are numbered from 0 to 31 and bit 0 is the right most bit, EXPANDED CMP/APR must be set to "APRONLY" or "BOTH" on the EQCORE form.

When "2" is entered, the CLI values on the EQPC forms must be 0 or 400 .

When "2" is entered, and QLPS is present, there must be a corresponding EQPIPE form for each SM-2000 as defined on the EQIM form. CTS overflow could result.

For 5E15 and later:

When CM VINTAGE is 2, CM2 COMPACT is "N", and FABRIC TYPE on the EQTMS form is "SNGL", then an entry for SHELF 0 in the SHELF EQUIPAGE - CM2 list on the EQTMS form must exist.

When CM VINTAGE is 2, CM2 COMPACT is "N", and the SM is not equipped with an SM-2000 class processor, the SHELF EQUIPAGE - CM2 list on the EQTMS form (5866 Record) must have the correct

entries to support the range of TMSLINKS in the office. Following is the required SHELF EQUIPAGE - CM2 rows for specific ranges of TMSLINKS (NCT EVEN LINK) defined on the EQIM form (5700 Record) needed for FABRIC TYPE of "DUAL" defined on the EQTMS form.

Shelf Equipage Row Requirements - SM for "DUAL" Fabric Type

TMSLINKs Equipped	SHELF EQUIPAGE - CM2 (row required)
2 - 61	1 and 2
62 - 125	3 and 4
126 - 189	5 and 6
190 - 253	7 and 8
254 - 317	9 and 10
318 - 381	11 and 12

When CM VINTAGE is 2, and CM2 COMPACT is "N" on this form, and FABRIC TYPE on the EQTMS form is "SNGL", and the SM is not equipped with an SM-2000 class processor, the NCT EVEN LINK values assigned on the EQIM form requires the following SHELF EQUIPAGE - CM2 on the EQTMS form.

Shelf Equipage Row Requirements - SM for "SNGL" Fabric Type

LINKs EQUIPPED	SHELF EQUIPAGE - CM2 (row required)
2 - 31	1
32 - 61	2
62 - 93	3
94 - 125	4
126 - 157	5
158 - 189	6

When CM VINTAGE is 2 and CM2 COMPACT is "N" on the EQCORE form, and FABRIC TYPE on EQTMS is "DUAL", and the SMs are equipped with SM-2000 class processors, the NLI TMS LINKs entered on the EQNLI form (5853 Record) requires the following SHELF EQUIPAGE - CM2 be entered on the EQTMS form.

Shelf Equipage Row Requirements - SM2000 for "DUAL" Fabric Type

TMSLINKs Equipped	SHELF EQUIPAGE - CM2 (row required)
2 - 61	1 and 2
62 - 125	3 and 4
126 - 189	5 and 6
190 - 253	7 and 8
254 - 317	9 and 10
318 - 381	11 and 12

When CM VINTAGE is 2 and CM2 COMPACT is "N" on the EQCORE form, and FABRIC TYPE on EQTMS is "SNGL", and the SMs are equipped with SM-2000 class processors, the NLI TMS LINKs entered on the EQNLI form (5853 Record) require the following SHELF EQUIPAGE - CM2 be entered on the EQTMS form.

Shelf Equipage Row Requirements - SM2000 for "SNGL" Fabric Type

LINKs EQUIPPED	SHELF EQUIPAGE - CM2 (row required)
2 - 31	1
32 - 61	2
62 - 93	3
94 - 125	4
126 - 157	5
158 - 189	6

When CM VINTAGE is 2:

Copyright © 2006 Lucent Technologies

MSGS CLI must not be entered.

MSGS AISLE must be entered.

CLOCK TYPE must be "24CHAN2" or "STDLNE2.

for the SM-2000 SMs on the EQPIPE form (5544 Record), these SMs must exist on the EQIM form (5700 Record) with SM-2000 class processor and an EQSTATUS of "O" (Operational).

a QLPS Gateway must first be defined on SIDE 0 with a PC NO. of 32 and on SIDE 1 with a PC NO. of 32 on the EQPC form before any other QLPS Gateways can be defined.

the REFERENCE value on each NCLKREF form must be unique.

QLPS Gateways for PC NO. of 33 can be defined on the EQPC form with an EQSTATUS of "O" (Operational) if there are QLPS Gateways of 32 defined as follows, on two EQPC forms with EQSTATUS of "O":

— EQPC.SIDE = 0 and EQPC.PC = 32

— EQPC.SIDE = 1 and EQPC.PC = 32

When CM VINTAGE is 2, and QGWP is "Y" on the EQPC form (5703 Record), an EQPC form must be defined with PC NO equal to 32 or 33.

When CM VINTAGE is 2, and any ENETLINK form tuple exists with SERV TYPE equal "RTCD", then for each EQIM form with an SM-2000 class processor, two corresponding EQPIPE forms (5544 Record) must exist where QLPS NETWORK equal 0 and 1.

When CM VINTAGE is 2, and the ENETPIPE form is entered with SERV TYPE "EEC", if the corresponding EQIM form has EQSTATUS set to "O" and SM USAGE is not set to "ORM", and if 4 EQQLPS form (5854 Record) tuples exist, then two corresponding EQPIPE forms must exist where QLPS NETWORK equal 0 and 1.

When CM VINTAGE is 2, and if a QLPS Gateway is defined on the EQPC form with SIDE equal 0 and PC NO. equal 32, then there must exist an EQPC form with SIDE equal 1 and PC NO. equal 32. Or if an EQPC form exists with SIDE equal 1 and PC NO. equal 32, then there must exist an EQPC form SIDE equal 0, PC NO. equal 32. Also, both EQPC forms must have the same value for EQSTATUS.

When CM VINTAGE is 2, and if a QLPS Gateway is defined on the EQPC form with SIDE equal 0 and PC NO. equal 33, then there must exist an EQPC form with SIDE equal 1 and PC NO. equal 33. Or if an EQPC form exists with SIDE equal 1 and PC NO. equal 33, then there must exist an EQPC form SIDE equal 0, PC NO. equal 33. Also, both EQPC forms must have the same value for EQSTATUS.

QLPS Gateway(s) defined on the EQPC form with a PC NO. of 32 or 33 can not exist unless 4 EQQLPS forms are defined as follows:

ONTC SIDE	QLPS NETWORK
0	0
1	0
0	1
1	1

Copyright © 2006 Lucent Technologies

And the EQSTATUS of these EQQLPS form entries must be "O".

For 5E15 and later, when CM VINTAGE is 3:

the EQCM3 form (5867 Record) must be inserted after the EQCORE form has been inserted.

CLOCK TYPE can only be "NCLK3" or "SANC3".

CLI must not be entered for LINK INTERFACE UNIT and MESSAGE INTERFACE UNIT.

QLI CLI on all EQTMSLINK forms associated with valid SMs must be 0.

MSGS CLI must be 0.

MSGS AISLE must not be entered.

VCDX OFFICE must be "N".

EXPANDED CMP/APR must be "NEITHER".

the EQPC (5703 Record) tuples for SIDE 0 PC N0. 8, and SIDE 1 PC NO. 12 are always required even though there is no need to input this form. The tuples will be built in forward mapping for CM3.

REFERENCE TYPEs of "24CHAN" and "30CHAN" on NCLKREF forms cannot have the same REFERENCE values.

four EQQLPS forms must be defined.

When CM VINTAGE is 3 on the EQCORE form, the LINK TYPE on the EQTMSLINK form must be "NCT1" when either:

The SM is not an SM2000.

The SM is an SM2000, the corresponding EQIM form's SM USAGE is "'ORM" and the NLI for this LINK has a TRCU PATH HOST TYPE other than "TRCU3" on the EQTRCUPTH form. The EQNLI form contains the TMS LINK number for each NLI.

NOTE:

Depending upon the value of the CM VINTAGE field on this form, an EQCM3 form either exists (indicating a CM3) or doesn't (indicating a CM2). The EQCM3 form's existence is queried by a number of form files to set up internal checks for validating the data required by the CM VINTAGE defined for this office. These form files include EQTMS, EQPC, EQPIPE, EQQLPS, EQNLI, EQTMSLINK and EQIM. This was done to reduce a significant number of crosschecks to form checks and assist in populating CM-related data at the form entry level.

The EQCORE/EQCM3 combination found is invalid and/or one or more of the above-listed form files contain invalid data for the CM defined in this office. A subset of these forms could contain invalid data even if the EQCORE/EQCM3 combination is valid if the combination was altered after some of the forms had been entered. DO NOT attempt to fix only the form files listed in error below. To insure data integrity, all of the form files should be validated via an ODA tool.

To correct this situation, make sure the CM VINTAGE on the EQCORE form is correct. If the value is 2, make

Copyright © 2006 Lucent Technologies

sure the EQCM3 form does NOT exist. If the value is 3, make sure the EQCM3 form DOES exist. Then either run the "errforms -u" command against the database (recommended) or re-enter each of the form files listed above and validate the data either by updating each form instance or using the review/validate function on each form instance.

The "errforms" with the -u option ensures that all relevant forms with assignment statements are updated in a CM3 office.

For 5E15 and later, when CM VINTAGE is 2 and NON GLOBAL SM on the CMTMH form (6021 Record) does not have an SM-2000 class processor on the corresponding EQIM form, there must be EQPC forms (5703 Record) entered on SIDE 0 and SIDE 1 with PC NO. set to 32 and EQSTATUS set to "O".

For 5E15 and later, when "3" is entered,

all RSMs (Remote Switching Modules) in the office must be connected to the HSM (Host Switching Module) via a DNU-S facility. This connection is defined on the RSMLNK form.

TRCU TYPE on the EQMTRCU form (5812 Record) must be "TRCU3".

5E16(2) and later:

When CM VINTAGE is 2 and bit 5 of TMS CLI is not set, and when SM USAGE on the EQIM form (5701 Record) is not "ORM" and UNIT TYPE is not "SMU6", then NLI 0/1 CLI on the EQNLI form must be 0.

When CM VINTAGE is 2 and SM USAGE on the EQIM form (5701 Record) is "ORM" the QLI CLI on each EQTMSLINK form associated with this SM depends on the type of TRCU (Transmission Rate Converter Unit) used in this transmission path. When the TRCU is of type "TRCU3" and UNIT TYPE is "SM2000", "SM2005", or "SMU6", then QLI CLI on the EQTMSLINK form (5851 Record) must be 100, otherwise QLI CLI must not be 100.

When CM VINTAGE is 2 and bit 5 of TMS CLI is not entered, and when SM USAGE on the EQIM form (5701 Record) is not "ORM" and UNIT TYPE is "SM2000" or "SM2005", then NLI 0/1 CLI on the EQNLI form must have bit 1 set (hex value 2).

When CM VINTAGE is 2 and bit 5 of TMS CLI is not entered, and when SM USAGE on the EQIM form (5701 Record) is not "ORM" and UNIT TYPE is "SMU6", then NLI 0/1 CLI on the EQNLI form must have bit 3 set (hex value 8).

2.7 #INTERRUPT STATUS

Description: Enter Interrupt-Inhibit Status.

Required Field.
Default: ALLOW
Valid Entries:

Valid INTERRUPT STATUS Entries

Entry	Description
A	Allow.
I	Inhibit.

2.8 #MSG AISLE

Description: Enter the aisle location of the Message Switch Frame. This entry consists of a floor and aisle

number. The first and second digits, from the left, are the floor number. The third and fourth digits, from the left, are the aisle number. It is recommended that floor 00 be used for equipment located in the basement, per floor plan designation.

Required Field.
Valid Entries: 0000 - 9999

2.9 #MSGS CLI

Description: This field is used to store the CM3 (Communication Module 3) MSGS Change Level Indicator.
Valid Entries: 0

2.10 MSGS IPDGN FILE

Description: The MSGS IPDGN FILE (Message Switch Input/Output Processor Diagnostic File) field is a No Change field for CM3 only, that contains the diagnostic image for the MSGS-IP.

Software Release: 5E15 and later

2.11 MSGS APDGN FILE

Description: The MSGS APDGN FILE (Message Switch Application Processor Diagnostic File) field is a No Change field for CM3 only, that contains the MSGS-IP ROM (Read Only Memory), FPGAs (Field-Programmable Gate Arrays), and MSGS-AP debugger code.

Software Release: 5E15 and later

2.12 MSGS IP FILE

Description: This field is a No Change field that contains the image for the MSCU/PPC (Message Switch Control Unit/Pump Peripheral Controller) operational image for the MSGS-IP (Message Switch - Input/Output Processer) for CM3 only.

Software Release: 5E15 and later

2.13 MSGS AP FILE

Description: This field is a No Change field that contains the operational images for the MSGS-AP (Message Switch -Application Processer) for CM3 only.

Software Release: 5E15 and later

2.14 MSGS ROM FILE

Description: The MSGS ROM FILE (Message Switch Read Only Memory Code File) field is a No Change field that contains the MSGS-IP ROM, FPGAs, and the MSGS-AP debugger code.

Software Release: 5E15 and later

2.15 #TMS AISLE

Description: Enter the aisle location of the Time Multiplexed Switch. This entry consists of a floor and aisle number. The first and second digits, from the left, are the floor number. The third and fourth digits, from the

Copyright © 2006 Lucent Technologies

left, are the aisle number. It is recommended that floor 00 be used for equipment located in the basement, per floor plan designation.

NOTE: This field is for 5E14 and earlier software releases.

Software Release: 5E14 and earlier
Required Field.
Valid Entries: 0000 - 9999

2.16 #TMS SIZE

Description: Enter the Time Multiplexed Switch Size in feet.

NOTE: This field is for 5E14 and earlier software releases.

Software Release: 5E14 and earlier
Required Field.
Valid Entries: 6 or 7 (feet)

Data Rules:

If CM VINTAGE is 2, this field must have a value of 6.

2.17 TMS CONFIGURATION

Description: Enter the Time Multiplexed Switch Configuration.

NOTE: This field is for 5E14 and earlier software releases.

Valid TMS CONFIGUATION Entries

Entry	Description
SNGL	Single-Fabric.
DUAL	Dual-Fabric.
DBDL	Software Release: 5E5 and earlier. Double Dual Fabric

Software Release: 5E14 and earlier

Data Rules:

If CM VINTAGE is 1, TMS CONFIGURATION must be blank or "DUAL".

If CM VINTAGE is 2, TMS CONFIGURATION must not be blank.

If "SNGL" is entered and CM2 Compact? is "N", the first pair of Model Numbers must be assigned for UNIT NUMBER 0.

If "SNGL" is entered, the SIDE 0 and SIDE 1 values for UNIT NUMBERS 0 and 1 (if entered) must all be either "TMSU2" or "TMSU3".

If "DUAL" is entered, the first and second pairs of MODEL NUMBERS must be assigned for UNIT NUMBERS 0 and 1.

If "DUAL" is entered, the SIDE 0 and SIDE 1 values for UNIT NUMBERS 0 and 1 must all be either "TMSU2" or "TMSU3".

Copyright © 2006 Lucent Technologies

If "SNGL" is entered, Model Numbers are not valid for UNIT NUMBERS 6 through 11.

If "DUAL" is entered, all rows are valid in sets of two.

For 5E9(1) and later, if CMTYPE on the ECDOPT form (5706 Record) is "CM2C", and TIME MULTIPLEXED SWITCH CLI on the EQCORE form is 20, TMS CONFIGURATION must be "SNGL".

If "SNGL" is entered and CM2 Compact is "N", the first pair of MODEL NUMBERS must be assigned for UNIT NUMBER 0.

For 5E10 and later, if "SNGL" is entered, the following rules must be met when defining the primary NLI Link, EVEN NLI 0, on the EQNLI form:

- The TMS LINK 0 value assigned to EVEN NLI 0 must be a multiple of 8 when TMS LINK 0 is less than 32 (8, 16, 24).
- The {TMS LINK 0 + 2} value assigned to EVEN NLI 0 must be a multiple of 8 when TMS LINK 0 is greater than 31 (38, 46, 54, ...).

LINK INTERFACE UNIT

2.18 #LI CLI

Description: Enter the Change Level Indicator for the Link Interface Unit; eight characters in the hexadecimal numbering system.

Required Field.

Valid Entry: 0 - 7FFFFFFF

For a complete listing of valid CLI values, J-Drawing and list combinations, see Division 8, Section 1.

MESSAGE INTERFACE UNIT

2.19 #MI CLI

Description: Enter the Change Level Indicator for the Message Interface Unit; eight characters in the hexadecimal numbering system.

Required Field.

Valid Entry: 0 - 7FFFFFFF

Data Rules:

For 5E10 and later, if the CLI value entered indicates that the bit number 10 (400h) is set, and/or CLI value entered on NETWORK CLOCK UNIT indicates that bit 1 and bit 8 are set (102h), where the bits are numbered from 0 to 31 and bit 0 is the right most bit, then EXPANDED CMP/APR must be "APRONLY" or "BOTH" on the EQCORE form.

If the CLI value entered indicates that the bit number 10 is set, where the bits are numbered from 0 - 31 and bit 0 is the right most bit, CM VINTAGE on the EQCORE form must be "2".

Copyright © 2006 Lucent Technologies

For a complete listing of valid CLI values, J-Drawing and list combinations, see Division 8, Section 1.

NETWORK CLOCK UNIT

The following fields (Section 2.20 - Section 2.22) provide the CLI (Change Level Indicator), CLOCK TYPE, and OSC TYPE for the Network Clock Unit.

2.20 #CLI

Description: Enter the Change Level Indicator for the Network Clock Unit; eight characters in the hexadecimal numbering system.

Required Field.

Valid Entry: 0 - 7FFFFFFF

Data Rules:

If CLI is "xyyyyyzy", where x is 0 - 7, y is 0 - f and z is 8 - f hex, AUTO SYNC must be "Y".

See Figure 1 for more Network Clock Unit dependencies.

For a complete listing of valid CLI values, J-Drawing and list combinations, see Division 8, Section 1.

2.21 #CLOCK TYPE

Description: Enter the Clock Type.

Required Field.

Valid CLOCK TYPE Entries

Entry	Description
24CHAN2	24-Channel Network Clock 2.
DS1	24-Channel DS1 Clock.
NCLK3	Network Clock 3.
SANC3	NCLK3 Stand Alone.
STDALNE	Stand Alone Clock.
STDALNE2	Stand Alone Network Clock 2 (not currently available).

Data Rules:

For the 5E2 Software Release with CM1, "DS1" and "STDALNE" are the only entries allowed.

For 5E2 and later Software Release with CM2, "24CHAN2" and "STDALNE2" are the only entries allowed.

For 5E9(1) and later, if CMTYPE is "CM2" or "CM2C" on the ECDOPT form, and TIME MULTIPLEXED SWITCH CLI on the EQCORE form is 20, and CLOCK TYPE is "24CHAN2", the following conditions must be met:

- The range of values for REFERENCE on the NCLKREF (Network Clock 2 Reference) form (5525 Record) must be 1 - 3.
- There must be at most 3 clock references:
  - At most, one analog and this analog reference must be the first one (i.e., REFERENCE on the NCLKREF form must be 1).

Copyright © 2006 Lucent Technologies

— If one reference is analog, there must be, at most, 2 digital references.

— If no reference is analog, there must be, at most, 3 digital references.

For 5E10 and later, if "24CHAN2" is entered, the following must be true:

- There must be at most 2 NCLKREF forms where REFERENCE TYPE is "24CHAN".
- When all of the NCLKREF forms entered have REFERENCE TYPE set exclusively to "24CHAN", the corresponding REFERENCE must be "1" if only 1 form is entered and must be in the range of "1" - "2" if 2 forms are entered.

For 5E15 and later,

When CLOCK TYPE is "24CHAN2" or "30CHAN2", a NCLKREF form (5525 Record) must exist.

When CLOCK TYPE is "24CHAN2" or "STDALNE2", OSC TYPE must be "DOMHI" or "DOMMED".

CLOCK TYPE must match the CLOCK TYPE value on the NCLKREF form (5525 Record).

When CLOCK TYPE is "NCLK3" there can be at most 8 NCLKREF forms.

When CLOCK TYPE is "NCLK3" or "SANC3", OSC TYPE must be "CM3HI".

When CLOCK TYPE is "NCLK3", CLI for NETWORK CLOCK UNIT must be 0.

When CLOCK TYPE is not "NCLK3" or "SANC3", and CLI for NETWORK CLOCK UNIT bit 7 is 0, AUTO SYNC must be "N".

2.22 OSC TYPE

Description: Enter the OSCILLATOR TYPE for the Network Clock.

Valid OSC TYPE Entries

Entry	Description
CM3HI	CM3 High Stability
DOMHI	High Stability.
DOMMED	Medium Stability.

Data Rules:

This field must be left blank when the CLOCK TYPE is "DS1" or "STDALNE". Otherwise, it must be entered.

For 5E15 and later, when OSC TYPE is "DOMMED", NC REF STAB must be "STRATUM3_NAR".

When OSC TYPE is "DOMHI", NC REF STAB must be "'STRATUM2_NAR".

2.23 AUTO SYNC

Description: Is Network Clock 2 Automatic Syncronization available? This feature provides automatic restoration of out-of-service Network Clock references.

Software Release: 5E9(1) and later

Required Field.
Default: N
Valid Entries: Y, N

Data Rules:

When AUTO SYN is "Y", for 5E15 and later, and CM VINTAGE is 2NETWORK CLOCK UNIT CLI must contain "xyyyyyzy", where:

x = 0 - 7
y = 0 - f
z = 8 - f (hexadecimal)

2.24 NC REF STAB

Description: The NC REF STAB field is used to indicate the Network Clock Reference Stability.

Required Field.

Software Release: 5E15 and later
Valid Entries: STRATUM2_NAR, STRATUM3E_NAR, STRATUM3_NAR, STRATUM2_INTL, or STRATUM3_INTL

TIME MULTIPLEXED SWITCH

2.25 #CLI

Description: Enter the Change Level Indicator for the Time Multiplexed Switch; eight characters in the hexadecimal numbering system.

Required Field.
Valid Entries: 0 - 7FFFFFFF

Data Rules:

For 5E14 and earlier, if the CLI entered indicates that the bit number 10 is set, where the bits are numbered from 0 - 31 and bit 0 is the right most bit, CM VINTAGE on the EQCORE form must be 2.

For a complete listing of valid CLI values, J-Drawing and list combinations, see Division 8, Section 1.

TMS SHELF EQUIPAGE MODEL NUMBER

The following fields (SIDE 0 and SIDE 1) are for 5e14 and earlier, and are used to equip additional packs. This positional list has two sides of 12 rows each, corresponding to the shelf/bay position in the frame. The TMS SHELF equipage is not used if CM VINT is 1. However, if CM VINT is 2, the TMS SHELF equipage is required.

The number of rows equipped is dependent upon the number of SMs in the office. The Model number must be the same for row 1 and 2 (all "TMSU2" or all "TMSU3"). Rows 3 through 12 can have the MODEL NUMBER mixed.

NOTE: Mixed model numbers are not a recommended configuration for rows 3 through 12. A warning will be issued if they are not the same.

The following table shows the correspondence between the TMS Shelf Equippage and the equipment frame bay and vertical position.

Row	SIDE 0 Bay	SIDE 1 Bay	Vertical Position
1	5	6	32
2	5	6	15
3	4	7	32
4	4	7	15
5	3	8	32
6	3	8	15
7	2	9	32
8	2	9	15
9	1	10	32
10	1	10	15
11	0	11	32
12	0	11	15

Row 1 must be entered when CM VINT is 2 and TMS CONFIGURATION is "SNGL", therefore bays 5 and 6 will have "TMSU2" or "TMSU3" packs in vertical position 32. The vertical position is always 32 in the odd numbered rows and 15 in the even numbered rows.

Because rows 1 and 2 must be entered when CM VINT is 2 and TMS CONFIGURATION is DUAL, bays 5 and 6 will have "TMSU2" or "TMSU3" packs in vertical positions 32 and 15. The vertical position is always 32 in the odd numbered rows and 15 in the even numbered rows.

2.26 SIDE 0/SIDE 1

Description: Enter the MODEL NUMBER for the TMS Shelf equipage. The TMS SHELF equipage is not used if CM VINT is 1.

NOTE: This field is for 5E14 and earlier software releases.

Valid UNIT NUMBER Entries	
Entry	**Description**
TMSU2	Used to provision CP KBN2 and KBN24 (both required).
TMSU3	Used to provision CP KBN5 (replacement for CP KBN2 and KBN24).

The following table provides the number of SMs versus TMS SHELF row requirements when TMS CONFIGURATION is "SNGL", CM VINTAGE is 2, and TIME MULTIPLEXED SWITCH CLI is not "0x20h". The number of rows required is tied to the number of TMSU packs required for the size of the (non-CDX) office (i.e., the number of SMs).

SMs vs. TMS Shelf Row Requirements for "SNGL" TMS Configuration	
SMs	**Rows Required**
1 - 15	1.
16 - 30	1 and 2.
31 - 46	1 through 3.
47 - 62	1 through 4.
63 - 78	1 through 5.
79 - 94	1 through 6.

RSMs (Remote Switching Modules) are not counted.

The following table provides the number of SMs versus TMS SHELF row requirements when TMS CONFIGURATION is "DUAL" and CM VINTAGE is 2. The number of rows required is tied to the number of TMSU packs required for the size of the (non-CDX) office (i.e., the number of SMs).

Copyright © 2006 Lucent Technologies

SMs vs. TMS Shelf Row Requirements for "DUAL" TMS Configuration	
SMs	**Rows Required**
1 - 30	1 and 2.
31 - 62	1 through 4.
63 - 94	1 through 6.
95 - 126	1 through 8.
127 - 158	1 through 10.
159 - 190	1 through 12.

RSMs (Remote Switching Modules) are not counted.

The following tables apply to the TMS SHELF EQUIPAGE to support the range of TMSLINKS in an SM-2000 office for "SNGL" configurations.

TMS Shelf Row Requirements - SM2000 for "SNGL" TMS Configuration	
TMS LINKs EQUIPPED (EVEN NLI TMS LINK 0)	**TMS SHELF EQUIPAGE (row required)**
2 - 31	1
32 - 61	2
62 - 93	3
94 - 125	4
126 - 157	5
158 - 189	6

RSMs (Remote Switching Modules) are not counted.

The following tables apply to the TMS SHELF EQUIPAGE to support the range of TMSLINKS in an SM-2000 office for "DUAL" configurations.

TMS Shelf Row Requirements - SM2000 for "DUAL" TMS Configuration	
TMSLINKs Equipped (EVEN NLI TMS LINK 0)	**TMS SHELF EQUIPAGE (row required)**
2 - 61	1 and 2
62 - 125	3 and 4
126 - 189	5 and 6
190 - 253	7 and 8
254 - 317	9 and 10
318 - 381	11 and 12

The NCT EVEN LINK is defined on the EQNLI form (5853 Record).

The following table applies to required TMS SHELF EQUIPAGE rows required for specific ranges of TMSLINKS (NCT EVEN LINK) for an SM using the "SNGL" TMS configuration, CM VINTAGE is 2, and CM2 Compact is "N".

TMS Shelf Row Requirements - SM for "SNGL" TMS Configuration	
TMS LINKs EQUIPPED (NCT EVEN LINK)	**TMS SHELF EQUIPAGE (row required)**
2 - 31	1
32 - 61	2
62 - 93	3
94 - 125	4
126 - 157	5
158 - 189	6

The NCT EVEN LINK is defined on the EQIM form (5700 Record).

Copyright © 2006 Lucent Technologies

Data Rules:

If CM VINT is 1, the TMS SHELF equipage must be blank. If CM VINT is 2, the TMS SHELF equipage is required.

The SIDE 0 and SIDE 1 values for UNIT NUMBER(s) 0 and 1, if entered, must all be the same, either "TMSU2" or "TMSU3".

CM2 Compact

The following field defines the location of the CM2 Compact.

NOTE: These fields must be blank for CM3.

2.27 EQUIPMENT BAY

Description: Enter the CM2 Compact equipment location bay number.

Required Field.

Software Release: 5E9(1) and later
Valid Entries: 1, 2, 3, 4, or blank for CM3

Data Rules:

When VCDX OFFICE is set to "Y" on the EQCORE form and UNIT TYPE is set to "SM2000" on the EQIM form, EQNLI form must not be populated.

2.28 CM2C SM

Description: Enter the SM that the CM2 COMPACT resides on.

Software Release: 5E10 and later.
Valid Entries: 1 - 192, or blank for CM3

CMP

These fields are used to define elements of the Communication Module Processor.

2.29 #EXPANDED CMP/APR

Description: Is the Memory Expanded CMP equipped? This field indicates which CMP (Communications Module Processor) is equipped. For 5E8 and later, a memory-expanded CMP (TN1800) is available.

NOTE: Recent Change implementation uses view 17.14 where the CLI field must be 1 and PC TYPE must be "CMP".

For 5E10 and later, the APR (Automatic Power Recovery) feature was added. For more information on APR, see Division 2, Section 2W.

With 5E12, the CMP runs out of core board memory if the TN1368 is used. Thus, the TN1800 is required for CM2 or the TN1871 is required for CM1.

NOTE: For 5E14 and later, this field was moved from screen 1 to screen 3 in conjuction with the

CMP Memory Expansion feature. See Division 2, Section 7AK and the NUMBER OF MEM BOARDS field.

Software Release: 5E10 and later.
Required Field.
Valid Entries: (see table below)

Valid EXPANDED CMP/APR Entries	
Software Release: 5E10 and later	
Entry	**Description**
APRONLY	APR (Automatic Power Recovery) is on, CMPME (CMP Memory Expanded) is off.
BOTH	APR is on, CMPME is on.
CMPMEONLY	APR is off, CMPME is on.
NEITHER	APR is off, CMPME is off.

Data Rules:

For 5E10 and later, when EXPANDED CMP/APR is "APRONLY" or "BOTH", CM VINTAGE must be 2.

If "APRONLY" or "BOTH" is entered, and (for 5E15 and later) CM VINTAGE is 2, the bit number 10 (400h) for the CLI must be set on the EQPC form, where the bits are numbered from 0 - 31 and bit 0 is the right most bit.

For 5E14 and earlier, for a CM2 office, when the MESSAGE INTERFACE UNIT CLI on the EQCORE form and/or the TIME MULTIPLEX SWITCH CLI on the EQCORE form is 400 (bit number 10), or the NETWORK CLOCK UNIT CLI is 102 (bit 1 and bit 8; where the bits are numbered from 0 to 31 and bit 0 is the right most bit), EXPANDED CMP/APR must be "APRONLY" or "BOTH" on the EQCORE form.

For 5E15 and later, for a CM2 office, when the MESSAGE INTERFACE UNIT CLI on the EQCORE form and/or the EQTMS CLI is 400 (bit number 10), or the NETWORK CLOCK UNIT CLI is 102 (bit 1 and bit 8; where the bits are numbered from 0 to 31 and bit 0 is the right most bit), EXPANDED CMP/APR must be "APRONLY" or "BOTH" on the EQCORE form. The reverse is also true, that is, in a CM2 office, when EXPANDED CMP/APR is "APRONLY" or "BOTH", the aforementioned CLI values must be entered. Note that in 5E15, the TMS CLI was moved from the EQCORE form to the EQTMS form.

2.30 NUMBER OF MEM BOARDS

Description: This field is used to define the number of memory boards for the CM2. This field was added in conjunction with the CMP Memory Expansion feature. See Division 2, Section 7AK. This field is only valid for CM2 only.

Software Release: 5E14 and later
Valid Entries:

Valid NUMBER OF MEM BOARDS Entries	
Entry	**Description**
2	Software Release: 5E13 to 5E14 retrofit and later: 1 TN1800, plus **2** TN1369s (CLI = 5).
3	Software Release: 5E14 and later 1 TN1800, plus **3** TN1369s (CLI = d); the third board is allowed, but is not required for 5E14 (future development).

Data Rules:

- **CAUTION:** When retrofitting from 5E13 to 5E14, the CMP is required to be equipped with at least two TN1369 boards **before** the retrofit. No ODA checks (i.e., error messages) are provided to test for the second TN1369 during retrofit. Although a third board can be provisioned, it is not required for the 5E14 Software Release. Note also that, for Recent Change, this entry is translated on RC view 17.14 by setting

PC TYPE to "CMP", and entering the appropriate CLI value as indicated above.

CM3 ONTC

These fields are used to define or modify options associated with the ONTC (Office Network and Timing Complex) subunits.

2.31 IPDGN FILE

Description: The Input/Output Processor Diagnostic File Name field is a No Change field that contains the diagnostic image for the ONTC-IP.

Software Release: 5E15 and later

2.32 APDGN FILE

Description: The Application Processor Diagnostics File Name field is a No Change field for CM3 only, that contains the diagnostic image for the ONTC-AP.

Software Release: 5E15 and later

2.33 IP FILE

Description: The Input/Output Processor File field is a No Change field for CM3 only, that contains the operational image for the ONTC-IP.

Software Release: 5E15 and later

2.34 AP FILE

Description: The Application Processor File field is a No Change field for CM3 only, that contains the operational image for the ONTC-AP.

Software Release: 5E15 and later

2.35 ROM FILE

Description: The Read Only Memory File field is a No Change field for CM3 only, that contains the ONTC-IP ROM, FPGAs, and the ONTC-AP debugger code.

Software Release: 5E15 and later

2.36 S0OSC0TBO

Description: This is a no display field used for retrofit purposes.

Software Release: 5E15 and later
Default: 0

2.37 S0OSC1TBO

Description: This is a no display field used for retrofit purposes.

Software Release: 5E15 and later

Copyright © 2006 Lucent Technologies

Default: 0

2.38 S1OSC0TBO

Description: This is a no display field used for retrofit purposes.

Software Release: 5E15 and later
Default: 0

2.39 S1OSC1TBO

Description: This is a no display field used for retrofit purposes.

Software Release: 5E15 and later
Default: 0

2.40 NC SYNC

Description: This is a no display field used for retrofit purposes.

Software Release: 5E15 and later

2.41 CORE

Description: This is a no display field used for retrofit purposes.

Software Release: 5E15 and later
Default: "O"

2.42 MSG SIZE

Description: This is a no display field used for retrofit purposes.

Software Release: 5E15 and later
Default: 6

FORM	CONDITION NOT ALLOWED	KEY FIELDS	EQUIPMENT UNIT
EQDSP	DSU = 0	IM, DSU, SG	Local DSU1 Model 1
EQDU	DLTUTYP = "DLTU24"	IM, DLTU	DLTU Model 1
EQDUP	FACIND = 0 and DFI_TYPE not equal "H1" or "H2"	IM, DLTU, DFIPK	DFI (24) Channel Model 1
EQLU	LUTYPE = "4AB1"	IM, LU	Analog Line Unit Model 1
EQLU	LUTYPE = "4AC1"	IM, LU	Analog Line Unit Model 2
EQMSP	Any entry	IM, DSU, SG	MSU Model 1
PSUGP	PHTYPE = "PH1"	IM, PSU, PSUSHELF	Protocal Handler Model 1
PSUGP	PHTYPE = "PH2"	IM, PSU, PSUSHELF	Protocal Handler Model 2

Figure 1 EQUIPMENT NOT ALLOWED FOR VCDX OFFICE

FORM	CONDITION NOT ALLOWED	KEY FIELDS	EQUIPMENT UNIT
EQDSP	DSU = 0	IM, DSU, SG	Local DSU1 Model 1
EQDU	DLTUTYP = "DLTU24"	IM, DLTU	DLTU Model 1
EQDUP	FACIND = 0 and DFI_TYPE not equal "H1" or "H2"	IM, DLTU, DFIPK	DFI (24) Channel Model 1
EQLU	LUTYPE = "4AB1"	IM, LU	Analog Line Unit Model 1
EQLU	LUTYPE = "4AC1"	IM, LU	Analog Line Unit Model 2

Copyright © 2006 Lucent Technologies

EQMSP	Any entry	IM, DSU, SG	MSU Model 1
PSUGP	PHTYPE = "PH1"	IM, PSU, PSUSHELF	Protocal Handler Model 1
PSUGP	PHTYPE = "PH2"	IM, PSU, PSUSHELF	Protocal Handler Model 2

Figure 2 EQUIPMENT NOT ALLOWED FOR VCDX OFFICE

```
SCREEN 1 OF 2                    5ESS Switch
eqcore                     OFFICE DATA ADMINISTRATION
(5701)                            CORE UNITS


*  1. KEY                0
#  2. VCDX OFFICE        N                     LINK INTERFACE UNIT
   3. CM2 COMPACT        N              # 13. CLI        ________

      MICU / TMS                              MESSAGE INTERFACE UNIT
#  4. EQSTATUS           O              # 14. CLI        ________
#  5. CM VINTAGE         _
#  6. EXPANDED CMP/APR   __________             NETWORK CLOCK UNIT
#  7. INTERRUPT STATUS   ALLOW          # 15. CLI        ________
                                        # 16. CLOCK TYPE ________
#  8. MSG AISLE          ____             17. OSC TYPE   ______
#  9. MSG SIZE           _                18. AUTO SYNC  N

  10. TMS AISLE          ____                    TIME MULTIPLEXED SWITCH
# 11. TMS SIZE           _              # 19. CLI        ________
  12. TMS CONFIGURATION ____
```

```
SCREEN 2 OF 2                    5ESS Switch             _
eqcore                     OFFICE DATA ADMINISTRATION
(5701)                            CORE UNITS
       20. TMS SHELF EQUIPAGE

               MODEL NUMBER                   CM2 COMPACT
               ------------                   -----------
       UNIT    22.     23.
 row  NUMBER  SIDE 0  SIDE 1             24. EQUIPMENT BAY ___
  1     0     ______ ______             25. CM2C SM       ___
  2     1     ______ ______
  3     2     ______ ______
  4     3     ______ ______
  5     4     ______ ______
  6     5     ______ ______
  7     6     ______ ______
  8     7     ______ ______
  9     8     ______ ______
 10     9     ______ ______
 11    10     ______ ______
 12    11     ______ ______
```

Figure 3 SAMPLE EQCORE FORM 5E10 - 5E13 SOFTWARE RELEASES

```
eqcore                              5ESS Switch
SCREEN 1 OF 3               OFFICE DATA ADMINISTRATION
(5701)                              CORE UNITS

 *1. KEY         0                   #12. TMS SIZE          _
  2. VCDX OFFICE N                    13. TMS CONFIGURATION ____
  3. DRM         N                  LINK INTERFACE UNIT
  4. CM2 COMPACT N                  >#14. CLI ________
           MICU / TMS               MESSAGE INTERFACE UNIT
  5. EQSTATUS         O             >#15. CLI ________
 #6. CM VINTAGE       _                 NETWORK CLOCK UNIT
 #7. EXPANDED CMP/APR _________     >#16. CLI        ________
  8. INTERRUPT STATUS ALLOW          #17. CLOCK TYPE ________
 #9. MSG AISLE        ____           18. OSC TYPE   _______
#10. MSG SIZE         _              19. AUTO SYNC  N
 11. TMS AISLE        ____
```

```
eqcore                              5ESS Switch
SCREEN 2 OF 3               OFFICE DATA ADMINISTRATION
(5701)                              CORE UNITS

TIME MULTIPLEXED SWITCH     21. TMS SHELF EQUIPAGE - MODEL NUMBERS
#20. CLI ________           ROW UNIT NUM SIDE 0 SIDE 1
                              1     0    _____  _____
                              2     1    _____  _____
                              3     2    _____  _____
                              4     3    _____  _____
                              5     4    _____  _____
                              6     5    _____  _____
                              7     6    _____  _____
                              8     7    _____  _____
                              9     8    _____  _____
                             10     9    _____  _____
                             11    10    _____  _____
                             12    11    _____  _____
```

```
eqcore                              5ESS Switch            _
SCREEN 3 OF 3               OFFICE DATA ADMINISTRATION
(5701)                              CORE UNITS

       CM2 COMPACT
 >24. EQUIPMENT BAY ___
  25. CM2C SM       ___
```

Copyright © 2006 Lucent Technologies

```
                 CMP
>#26. EXPANDED CMP/APR     _________
  27. NUMBER OF MEM BOARDS 2
```

Figure 4 SAMPLE EQCORE FORM 5E14 SOFTWARE RELEASE

```
eqcore                              5ESS Switch
SCREEN 1 OF 3              OFFICE DATA ADMINISTRATION
(5701)                              CORE UNITS

*1. KEY         0                          MESSAGE SWITCH
 2. VCDX OFFICE N                >8. MSGS AISLE      ____
 3. DRM         N                 9. MSGS CLI        ________
 4. CM2 COMPACT N                    MSGS IPDGN FILE ______________
                                     MSGS APDGN FILE ______________
>5. EQSTATUS         O              MSGS IP FILE    ______________
#6. CM VINTAGE       _              MSGS AP FILE    ______________
 7. INTERRUPT STATUS ALLOW           MSGS ROM FILE   ______________
```

```
eqcore                              5ESS Switch
SCREEN 2 OF 3              OFFICE DATA ADMINISTRATION
(5701)                              CORE UNITS

  LINK INTERFACE UNIT                     CM2 COMPACT
 >15. LI CLI ________                >22. EQUIPMENT BAY ___
                                      23. CM2C SM       ___
 MESSAGE INTERFACE UNIT
 >16. MI CLI ________                                CMP
                                     >24. EXPANDED CMP/APR     _________
       NETWORK CLOCK UNIT             25. NUMBER OF MEM BOARDS 2
>#17. CLI         ________
 #18. CLOCK TYPE  ________
  19. OSC TYPE    ______
  20. AUTO SYNC   N
 #21. NC REF STAB _____________
```

```
eqcore                          5ESS Switch          _
SCREEN 3 OF 3            OFFICE DATA ADMINISTRATION
(5701)                          CORE UNITS

         CM3 ONTC
IPDGN FILE _______________
APDGN FILE _______________
IP FILE    _______________
AP FILE    _______________
ROM FILE   _______________
```

Figure 5 SAMPLE EQCORE FORM 5E15 AND LATER SOFTWARE RELEASES

Copyright © 2006 Lucent Technologies

SEC. 4: 5702 RECORD
MESSAGE INTERFACE CONTROL UNIT NETWORK CLOCK REFERENCE RECORD
NETWORK CLOCK REFERENCE FORM (EQNCREF)

1. GENERAL

The 5702 Record is available with the 5E1 and later Software Releases. It is used to define the Message Interface Control Unit Network Clock Reference status assignments for the TMS (Time Multiplexed Switch) system side.

This record is intended to be used as an Office Record for those 5ESS offices that are not utilizing an Operational Support System (e.g., RMAS) for generation of Office Records.

2. FORM AND RECORD ENTIRES

2.1 *SIDE

Description: Enter the Message Interface Control Unit/Time Multiplexed Switch System Side Number.
Valid Entries: 0 - 1

PRIMARY CLOCK

2.2 EQSTATUS

Description: Enter the Status of the Equipment.
Default: O
Valid Entries:

Valid EQSTATUS Entries

Entry	Definition
U	Unequipped.
G	Growth.
O	Operational.

Data Rules:

For new offices and units destined for factory testing, operational is the only allowed value. During off-line ODA database retrofits, the other values are valid.

If the office has a stand alone clock (indicated in the CLOCK TYPE field on the EQCORE form), EQSTATUS should indicate Unequipped.

2.3 INTERRUPT STATUS

Description: Enter the Interrupt-Inhibit Status.
Default: Allow
Valid Entries:

Valid INTERRUPT STATUS Entries

Entry	Definition
A	Allow.
I	Inhibit.

Data Rules:

Copyright © 2006 Lucent Technologies

If the office has a stand alone clock (indicated in the CLOCK TYPE field on the EQCORE form), INTERRUPT STATUS should indicate Inhibit.

SECONDARY CLOCK

2.4 EQSTATUS

Description: Enter the Status of the Equipment.
Default: O
Valid Entries:

Valid EQSTATUS Entries

Entry	Definition
U	Unequipped.
G	Growth.
O	Operational.

Data Rules:

For new offices and units destined for factory testing, operational or unequipped are only allowed values. During off-line ODA database retrofits, the other values are valid.

If the office has a stand alone clock (indicated in the CLOCK TYPE field on the EQCORE form), EQSTATUS should indicate Unequipped.

2.5 INTERRUPT STATUS

Description: Enter the Interrupt-Inhibit Status.
Default: Allow
Valid Entries:

Valid INTERRUPT STATUS Entries

Entry	Definition
A	Allow.
I	Inhibit.

Data Rules:

If the office has a stand alone clock (indicated in the CLOCK TYPE field on the EQCORE form), INTERRUPT STATUS should indicate Inhibit.

CROSS COUPLE CLOCK

2.6 EQSTATUS

Description: Enter the Status of the Equipment.
Default: O
Valid Entries:

Valid EQSTATUS Entries

Entry	Definition
U	Unequipped.
G	Growth.
O	Operational.

Data Rules:

Copyright © 2006 Lucent Technologies

For new offices and units destined for factory testing, operational or unequipped are only allowed values. During off-line ODA database retrofits, the other values are valid.

If the office has a stand alone clock (indicated in the CLOCK TYPE field on the EQCORE form), EQSTATUS should indicate Unequipped.

2.7 INTERRUPT STATUS

Description: Enter the Interrupt-Inhibit Status.
Default: Allow
Valid Entries:

Valid INTERRUPT STATUS Entries

Entry	Definition
A	Allow.
I	Inhibit.

```
eqncref                          5ESS Switch            _
5702                      OFFICE DATA ADMINISTRATION
                         MICU NETWORK CLOCK REFERENCE

* 1. SIDE  0



     PRIMARY CLOCK                   SECONDARY CLOCK

  3. EQSTATUS          O         7. EQSTATUS           O
  5. INTERRUPT STATUS  ALLOW     9. INTERRUPT STATUS   ALLOW


     CROSS COUPLE CLOCK

 11. EQSTATUS          O
 13. INTERRUPT STATUS  ALLOW
```

Figure 1 SAMPLE EQNCREF FORM 5E5 AND LATER SOFTWARE RELEASES

Copyright © 2006 Lucent Technologies

SEC. 5: 5703 RECORD
PERIPHERAL CONTROLLER RECORD - EQPC

1. GENERAL

The 5703 Record is available with the 5E1 and later Software Releases. It is used to define Peripheral Controller Configuration Data.

Both Sides 0 and 1 of the Peripheral Controller Message Switch are identically defined if the office is equipped with Communication Module 1. When the office is equipped with Communication Module 2, the Peripheral Controller Message Switch is defined as stated in Figure 2 .

The table in Figure 1 illustrates the relationship of the Peripheral Controllers to CTSs (Control Time Slots). Each SM (Switching Module) receives two CTS assignments, an even CTS on the even NCT link, and an odd CTS on the odd NCT link. The even CTSs, as shown in the table, are defined on the EQIM form (5700 Record) and not on this EQPC form. They are presented in this section because of the dependency of the CTSs on the Peripheral Controller. The following paragraphs describe the table.

A community is an MSPU (Message Switch Peripheral Unit) in the MSGS (Message Switch) cabinet. Two community numbers are given in the table, the community number for the even CTS, and in parentheses, the community number for the odd CTS. Each community provides up to four PCs (Peripheral Controllers).

Two Peripheral Controller numbers are given in the table, the PC number for the even CTS, and in parentheses, the PC number for the odd CTS. Each PC provides up to eight CTSs as shown. (The odd CTS is always one greater than the even CTS and is not shown in the table.)

PC numbers 8 and above are used to provide CTSs to SMs. They are also known as MMPs (Module Message Processors). The PC numbers for both the even CTS and the odd CTS must be entered on this EQPC form.

PC numbers 4 and 5 in Community 1 are for special use. PC 4 is for the PPC (Pump Peripheral Controller). PC 5 is for the FPC (Foundation Peripheral Controller). Both PC's 4 and 5 must be entered on this EQPC form.

For 5E9(2) and later, PC numbers 32 and 33 are for QGPs (QLPS (Quad-Link Packet Switch) Gateway Processors).

NOTE: When an office is equipped with CM3 (Communication Module Model 3), all information will be handled directly by ODA (Office Data Administration) with no input from this form.

1.1 Recent Change View

The corresponding Recent Change Views for this form are 17.2 and 17.14.

2. FORM ENTRIES

2.1 BASE AND CONTROL, ESS UNIT

Enter the Base and Control Number and the Office Name on each record.

2.2 * SIDE

Description: Enter the Peripheral Controller Message Switch Side.

Copyright © 2006 Lucent Technologies

Required Field.
Valid Entries: 0 - 1

Data Rules:

This form can only be used in a non-CM3 office.

2.3 * PC NO.

Description: Enter the Peripheral Controller Number.

Required Field.

Valid PC NO. Entries

Entry	Definition
4	PPC (Pump Peripheral Controller)
5	FPC (Foundation Peripheral Controller)
8 - 31	MMP (Module Message Processors)
32 - 33	Software Release: 5E9(2) and later. QGP (QLPS (Quad-Link Packet Switch) Gateway Processor). Valid only with CM2.
40 - 63	MMP (Module Message Processors (MMP). Valid only with CM2.

Data Rules:

Zero, two, or four QGPs (QLPS Gateway Processors) may be equipped on a switch. If an EQPC form is defined with PC NO. set to 32 and SIDE set to 0, then another EQPC form must be defined with PC NO. set to 32 and SIDE set to 1; the opposite is also true. Both forms must have the same value for EQSTATUS. Both must be defined before other QLPS Gateway Processors can be defined.

If an EQPC form is defined with PC NO. set to 33 and SIDE set to 0, then another EQPC form must be defined with PC NO. set to 33 and SIDE set to 1; the opposite is also true. Both forms must have the same value for EQSTATUS.

A QLPS Gateway Processor can be defined on the EQPC form (PC NO. is 32 or 33) only if four EQQLPS forms (5854 Records) have been defined with the following key fields and with EQSTATUS set to "O".

ONTC SIDE	QLPS NETWORK
0	0
1	0
0	1
1	1

QLPS Gateway Processors for PC NO. 33 can be defined with EQSTATUS set to "O" only if QLPS Gateway Processors for PC NO. 32 are defined with EQSTATUS set to "O".

When EQPC forms are set to 32 or 33 (indicating QGWP Quad-link GateWay Processor), the QGWP field on the ECDOPT form must be set to "Y".

2.4 EQSTATUS

Description: Enter the Status of the Equipment.

Required Field.
Default: O
Valid Entries:

Valid EQSTATUS Entries	
Entry	**Definition**
G	Growth
O	Operational
U	Unequipped

Data Rules:

For new offices and units destined for factory testing, "O" (operational) is the only allowed value. During offline ODA database retrofits, EQSTATUS may be "O" or "U" but not "G".

2.5 CLI

Description: Enter the Change Level Indicator of the Peripheral Controller. For a complete listing of valid CLI values, J-Drawing and list combinations, see Division 8, Section 1.

Required Field.
Default: 0
Valid Entries: 0 - 7FFFFFFF

Data Rules:

CLI must be specified whenever EQSTATUS is entered.

2.6 INTERRUPT STATUS

Description: Enter the Interrupt-Inhibit Status.

Required Field.
Default: A
Valid Entries:

Valid INTERRUPT STATUS Entries	
Entry	**Definition**
A	Allow.
I	Inhibit Status.

PERIPHERAL CONTROLLERS TO CONTROL TIME SLOTS TABLE		
COMMUNITY NUMBER	**PERIPHERAL CONTROLLER NUMBER**	**CONTROL TIME SLOTS ON EVEN NCT LINKS**
0(1)	4, 5	Special Use
2(3)	8(12)	2 10 18 26 34 42 50 58
	9(13)	66 74 82 90 98 106 114 122
	10(14)	130 138 146 154 162 170 178 186
	11(15)	194 202 210 218 226 234 242 250
4(5)	16(20)	4 12 20 28 36 44 52 60
	17(21)	68 76 84 92 100 108 116 124
	18(22)	132 140 148 156 164 172 180 188
	19(23)	96 204 212 220 228 236 244 252
6(7)	24(28)	6 14 22 30 38 46 54 62
	25(29)	70 78 86 94 102 110 118 126
	26(30)	134 142 150 158 166 174 182 190
	27(31)	198 206 214 222 230 238 246 254
8	32, 33	Special Use
11(12)	44(40)	3 11 19 27 35 43 51 59
	45(41)	67 75 83 91 99 107 115 123
	46(42)	131 139 147 155 163 171 179 187
	47(43)	195 203 211 219 227 235 243 251
13(14)	52(48)	5 13 21 29 37 45 53 61
	53(49)	69 77 85 93 101 109 117 125

Copyright © 2006 Lucent Technologies

	54(50)	133 141 149 157 165 173 181 189
	55(51)	197 205 213 221 229 237 245 253
15(16)	60(56)	7 15 23 31 39 47 55 63
	61(57)	71 79 87 95 103 111 119 127
	62(58)	135 143 151 159 167 175 183 191
	63(59)	199 207 215 223 231 239 247 255

Figure 1 PERIPHERAL CONTROLLERS TO CONTROL TIME SLOTS

PERIPHERAL CONTROLLER MESSAGE SWITCH SIDE ASSIGNMENTS FOR CM2 OFFICES

PERIPHERAL CONTROLLER	SIDE DEFINED SINGLE MMPs	SIDE DEFINED DUAL MMPs (5E6 and later)
4,5	Both Sides 0 and 1	Both Sides 0 and 1
8,9,10,11	Side 0 only	Both Sides 0 and 1
12,13,14,15	Side 1 only	Both Sides 0 and 1
16,17,18,19	Side 0 only	Both Sides 0 and 1
20,21,22,23	Side 1 only	Both Sides 0 and 1
24,25,26,27	Side 0 only	Both Sides 0 and 1
28,29,30,31	Side 1 only	Both Sides 0 and 1
32,33	Both Sides 0 and 1	Both Sides 0 and 1
40,41,42,43	Side 1 only	Both Sides 0 and 1
44,45,46,47	Side 0 only	Both Sides 0 and 1
48,49,50,51	Side 1 only	Both Sides 0 and 1
52,53,54,55	Side 0 only	Both Sides 0 and 1
56,57,58,59	Side 1 only	Both Sides 0 and 1
60,61,62,63	Side 0 only	Both Sides 0 and 1

Figure 2 PC MESSAGE SWITCH SIDE ASSIGNMENTS FOR CM2 OFFICES

```
eqpc                          5ESS Switch          _
5703                     OFFICE DATA ADMINISTRATION
                           PERIPHERAL CONTROLLER


* 1. SIDE              0
* 2. PC NO.            31

  4. EQSTATUS          O
  5. CLI               00000000
  6. INTERRUPT STATUS  ALLOW
```

Figure 3 SAMPLE EQPC FORM 5E5 AND LATER SOFTWARE RELEASES

Copyright © 2006 Lucent Technologies

SEC. 7: 5705 RECORD
REMOTE ALARM UNIT EQUIPAGE RECORD - EQRAU

1. GENERAL

The 5705 Record is available with the 5E1 Release 2 and later Software Releases. It is used to define the information on the RAU (Remote Alarm Unit). This is not an actual unit, but a board in the office alarm unit in the miscellaneous cabinet of a Remote Switching Module.

With 5E2 and later Software Releases this record defines the type of Alarm Unit for a Master Remote Switching Module that has the Alarm Output Option (RSM SITE OPTIONS form). There are two different Alarm Units, the RAU (Remote Alarm Unit) for 5A RSMs and the ASC (Alarm and Status Circuit) for MMRSMs (Multi-module RSMs).

1.1 Recent Change View

The corresponding Recent Change Views for this form are 18.1 and 18.14.

2. FORM AND RECORD ENTRIES

2.1 BASE AND CONTROL, ESS UNIT

Enter the Base and Control Number and the Office Name on each record.

2.2 *REMOTE SWITCHING MODULE

Description: Enter the SM (Switching Module) for the Remote Switching Module.

Required Field.

Valid REMOTE SWITCHING MODULE Entries

Entry	Description
1 - 48	Offices equipped with CM1 (Communications Module 1).
1 - 192	Offices equipped with CM2.

2.3 ALARM TYPE

Description: Enter the Alarm Type for this Master Remote Switching Module with the Alarm Output Option (RSM SITE OPTIONS form).

Required Field.

Valid ALARM TYPE Entries

Entry	Description
ASC	Alarm and Status Circuit, applicable to new MMRSMs (Multi-module Remote Switching Modules).
RAU	Remote Alarm Unit

Data Rules:

For 5E9(1) and earlier, when ALARM TYPE is "ASC", RAU BAY and RAU VERTICAL must not be entered.

When ALARM TYPE is "RAU", RAU BAY and RAU VERTICAL must be entered.

For 5E9(2) and later, RAU BAY and RAU VERTICAL must be entered for any ALARM TYPE.

Copyright © 2006 Lucent Technologies

2.4 ASC/RAU STATUS

Description: Enter the status of the Remote Alarm Unit board.

Required Field.
Default: O
Valid Entries:

Valid ASC/RAU STATUS Entries

Entry	Description
G	Growth.
O	Operational. For new offices and units destined for factory testing, "O" is the only allowed value. During offline ODA data base retrofits, the other values are valid.
U	Unequipped.

Data Rules:

For new offices and equipment additions, only "O" is allowed.

2.5 ASC/RAU CLI

Description: Enter the Change Level Indicator for the Remote Alarm Unit board.

Required Field.
Valid Entries: 0 - 7FFFFFFF

For a complete listing of valid CLI values, J-Drawing and list combinations, see Division 8, Section 1.

2.6 RAU BAY

Description: Enter the Miscellaneous Frame Number on which the OAU (Office Alarm Unit) is mounted.

Required Field for 5E9(2) and later.
Valid Entries: 0 - 2

Data Rules:

For 5E9(1) and earlier, when ALARM TYPE is ASC, then this field should be left blank.

When ALARM TYPE is "RAU", then this field must be entered.

For 5E9(2) and later, RAU BAY and RAU VERTICAL must be entered for any ALARM TYPE.

2.7 RAU VERTICAL

Description: Enter the vertical equipment location of the bottom of the OAU (Office Alarm Unit) in which the RAU (Remote Alarm Unit) is located.

Required Field for 5E9(2) and later.
Valid Entries: 0 - 84

Data Rules:

For 5E9(1) and earlier, if ALARM TYPE is "ASC", then this field should be left blank.

When ALARM TYPE is "RAU", then this field must be entered.

Copyright © 2006 Lucent Technologies

For 5E9(2) and later, RAU BAY and RAU VERTICAL must be entered for any ALARM TYPE.

For 5E9(2) and later,when VCDX OFFICE is "Y" on the EQCORE form (5701 Record), this field must be 69 or 76.

2.8 ASC/RAU AISLE

Description: Enter the floor and aisle location of the miscellaneous cabinet in which the office alarm unit is located. The valid floor range is 00 - 99. The valid aisle range is 00 - 99.

Required Field.
Valid Entries: 0000 - 9999

```
eqrau                          5ESS Switch            _
5705                      OFFICE DATA ADMINISTRATION
                          REMOTE ALARM UNIT EQUIPAGE



* 1. REMOTE SWITCHING MODULE      005


  2. ALARM TYPE        RAU
  3. ASC/RAU STATUS    O
  4. ASC/RAU CLI       00000000

  5. ASC/RAU BAY       1
  6. ASC/RAU VERTICAL  24
  7. ASC/RAU AISLE     0110
```

Figure 1 SAMPLE EQRAU FORM 5E2 AND LATER SOFTWARE RELEASES

Copyright © 2006 Lucent Technologies

SEC. 8: 5706 RECORD
ECD OPTIONS FORM - ECDOPT

1. GENERAL

The ECDOPT form (Equipment Configuration Database Options) (5706 Record) is applicable to (and required for) all offices. It is required to translate all options in the AM (Administration Module) for initial offices. The translations include:

- The CC (Central Control) Unit
- The office disk system
- The IOPs (Input/Output Processors)
- The VIOPs (Virtual Input/Output Processors)
- The CNI (Common Network Interface) equipment
- The AM interface in the CM2 (Communications Module 2)
- The AM interface in the CM2C/CDX (Compact Digital Switch)

This form reflects the current hardware configuration of the system and describes the attributes and status of all processor and peripheral hardware entered into the UNIX-RTR (Real Time Reliable) Operating System, formerly DMERT (Duplex Multiple Environment Real Time). The fields on this form indicate which items are equipped and, in some cases, the type of equipment used. In effect, this form links the 5ESS to the UNIX-RTR Operating System.

The reproducible 5706 Record has been expanded into the 5706-1/2 Records to provide adequate space for data entry. The records may be reproduced and used as needed. However, if this record is requested in the ODA database using the "records" command, the screen image of the input form will be printed instead of the tabularized records that appear in Figures 1 and 2.

1.1 FLEXIBLE INPUT/OUTPUT PROCESSOR

Available with the 5E4(2) and later Software Releases, Flexible IOP selection is used to define the Input/Output Processor devices associated with the 5ESS Switch.

1.2 SCSI BUS DISK INTERFACE

The 5E6 Software Release introduces the SCSI Bus disk interface which can either replace or co-exist with the SMD (Storage Module Device) disk interface.

1.3 RETROFIT OFFICES

Retrofit offices are modified via the RETINFO form (5845 Record). This form provides an ordering mechanism for Disk Configurations and Optional Disk Layouts in a retrofitting office. For more information about RETINFO, consult the TG-5 Translation Guide, Division 8, Section 47.

2. FORM AND RECORD ENTRIES

Copyright © 2006 Lucent Technologies

2.1 BASE AND CONTROL UNIT, ESS UNIT

Enter the Base and Control Number and Office Name on each record.

2.2 *KEY

Description: The only valid entry is 0 and is supplied as the default value.

2.3 #AT&T LONG DISTANCE

Description: Specifies whether the office is an AT&T Office with NID (Network ID) 254 or 236. An answer of YES implies long distance. This field is used to determine which temporary CNI (Common Network Interface) data files will be supplied to the CNI database.

Software Release: 5E12 and later
Valid Entries: Y, N

2.4 #CUSTOMER TYPE

Description: This field indicates whether the office is owned by NSD (Network Services Division) or a LEC (Local Exchange Carrier). This field is used to determine which temporary CNI (Common Network Interface) data files will be supplied to the CNI database.

Software Release: 5E5 through 5E11
Required Field.
Valid Entries:

Valid CUSTOMER TYPE Entries

Entry	Definition
NSD	Network Services Division
LEC	Local Exchange Carrier

2.5 #TIME ZONE

Description: Enter the Time Zone in which the 5ESS Switch is located. This entry reflects the hour difference from GMT (Greenwich Mean Time).

Valid TIME ZONE Entries

Entry	Definition
-12 through +12	Hours different from GMT.
EST or -5	Eastern Standard Daylight Time.
CST or -6	Central Standard Daylight Time.
MST or -7	Mountain Standard Daylight Time.
PST or -8	Pacific Standard Daylight Time.
-5S	Software Release: 5E5 and later. Eastern Standard Time (no Daylight Savings Time).
-6S	
-7S	
-8S	

Data Rules:

The TIME ZONE entered on the ECDOPT form must equal the TIME ZONE entered on the OFCOPT form (5509 Record).

2.6 #VCDX

Copyright © 2006 Lucent Technologies

Description: This field specifies if this switch is a Very Compact Digital Exchange.

The 5ESS-2000 Switch VCDX switch is built on the 5ESS-2000 Switch platform. Most of the features supported by the 5ESS-2000 Switch are supported by the VCDX switch. The VCDX switch can meet market need for a highly reliable, very small switch, at a competitive price.

The VCDX switch uses only one SM and a simplex workstation. The workstation provides the AM/CM/CMP functionality. All call processing software runs on the SM (that is, it does not rely on the AM/CM/CMP) and therefore is not dependent on the simplex workstation.

Software Release: 5E9(2) and later
Required Field.
Default: N
Valid Entries: Y, N

Data Rules:

If VCDX is "Y",

- DEVICE TYPES can only be "TTY9-14", " SDL0" and "SDL13".

For 5E10 - 5E13, if VCDX is "Y", DEVICE TYPES can only be "TTY7", "TTY9 -14", "TTY21", "TTY43", " SDL0" and "SDL13".

For 5E14 and later, if VCDX is "Y", DEVICE TYPES can only be "TTY7, 9-14, 18-19, 21, 26-34, 43, 50", "SDL 0, 1, 13".

VCDX/SPC Device Type Restrictions - 5E9(2)

SPC CARD PORT	IOP/PC/SLOT/P	CONTROLLER	DEVICE
2	0232 or SPC2	TTYC11	TTY9
3	0233 or SPC3	TTYC11	TTY10
4	0302 or SPC4	TTYC12	TTY11
5	0303 or SPC5	TTYC12	TTY12
6	0312 or SPC6	TTYC13	TTY13
7	0313 or SPC7	TTYC13	TTY14

VCDX/SPC Device Type Restrictions - 5E10 - 5E11

SPC CARD PORT	IOP/PC/SLOT/P	CONTROLLER	DEVICE
2	0232 or SPC2	TTYC11	TTY9
3	0233 or SPC3	TTYC11	TTY10
4	0302 or SPC4	TTYC12	TTY11
5	0303 or SPC5	TTYC12	TTY12
			TTY21
6	0312 or SPC6	TTYC13	TTY7
			TTY13
7	0313 or SPC7	TTYC13	TTY14
			TTY43

VCDX/SPC Device Type Restrictions - 5E12 - 5E13

SPC CARD PORT	IOP/PC/SLOT/P	CONTROLLER	DEVICE
2	0202	TTYC11	TTY9
3	0203	TTYC11	TTY10
4	0212	TTYC12	TTY11
5	0213	TTYC12	TTY12
			TTY21
6	0222	TTYC13	TTY13
			TTY7
7	0223	TTYC13	TTY14
			TTY43

Copyright © 2006 Lucent Technologies

VCDX/HSI Device Type Restrictions - 5E9(2) - 5E11

HSI CARD PORT	IOP/PC/SLOT/P	CONTROLLER	DEVICE
0	2002 or HSI0	SDLC0	SDL0
1	2012 or HSI1	SDLC1	SDL13

VCDX/HSI Device Type Restrictions - 5E12 - 5E13

HSI CARD PORT	IOP/PC/SLOT/P	CONTROLLER	DEVICE
0	2002	SDLC0	SDL0
1	2012	SDLC1	SDL13

VCDX/SPC Device Type Restrictions - 5E14 and later

SPC CARD PORT	IOP/PC/SLOT/P	CONTROLLER	DEVICE
2	0202	TTYC11	TTY
3	0203	TTYC11	TTY
4	0212	TTYC12	TTY
5	0213	TTYC12	TTY
6	0222	TTYC13	TTY
7	0223	TTYC13	TTY

VCDX/HSI Device Type Restrictions - 5E14

HSI CARD PORT	IOP/PC/SLOT/P	CONTROLLER	DEVICE
0	2002	SDLC0	SDL0
1	2012	SDLC1	SDL13
2	2022	SDLC2	SDL1

VCDX/HSI Device Type Restrictions - 5E15 and later

HSI CARD PORT	IOP/PC/SLOT/P	CONTROLLER	DEVICE
0	2002	SDLC0	SDL0
1	2012	SDLC1	SDL13
2	2022	SDLC2	SDL1
3	2023	SDLC3	SDL6

When VCDX is "Y":

- CM TYPE must not be entered.
- PROCESSOR MEMORY SIZE must be 64.
- PROCESSOR MODEL must be "WORKSTATION".
- IOMI BOARDS must be 1.
- UTIL CKT must be "N".
- RPCN000,320 must be "N".
- MHD4,5 through MHD15 must all be "N".
- SCC O must be "N" and SCC 1 must not be entered.
- MTO must be "DAT".
- MT1 must not be entered.
- IOP2 must be "Y" and IOP3 must be "N".
- For 5E9(2) through 5E13, SCSDC1 through SCSDC1011 must all be "N".
- CLLI must not be entered.
- COLORSCAN2 LINE COUNT must be 24.

Copyright © 2006 Lucent Technologies

- AM ODD MEMORY SIZE must be
  - 6144 (5E11 and earlier).
  - 9216 (5E12).
  - 10240 (5E13 and later).
- MCC BOARD TYPE must be "TN983".

For 5E13 and later:

When VCDX is "Y",

- ALT BOOT DSK must be "N".
- PROCESSOR MEMORY SIZE must be 128.

For 5E14:

NOTE: TTYs are no longer fixed to a port.

When VCDX is "Y":

SCSDC0 through SCSDC1011 must all be N.

MCC BOARD TYPE must be UN597. UN597 is the only legal value in 5E14.1. TN983 is no longer valid.

DEVICE TYPEs can only be "TTY(7, 9-14, 18-19, 21, 26-34, 43, 50)", "SDL0", "SDL1", or "SDL13".

For 5E15 and later:

NOTE: TTYs are no longer fixed to a port.

When VCDX is "Y":

SCSDC0 through SCSDC1011 must all be N.

MCC BOARD TYPE must be UN597. UN597 is the only legal value in 5E14.1. TN983 is no longer valid.

DEVICE TYPEs can only be "TTY(7, 9-14, 18-19, 21, 26-34, 43, 50)", "SDL0", "SDL1", "SDL6" , or "SDL13".

When DEVICE TYPE is "SDL6", the DEVICE CONTROLLER must be "SDLC3".

When DEVICE TYPE is "SDL6" the IOP/PC/SLOT/P entry must be 2032.

For 5E13 and later:

When VCDX is "N",:

Copyright © 2006 Lucent Technologies

- CM TYPE must be entered.
- PROCESSOR MEMORY SIZE must be a minimum of:

  40 for 5E9(1) - 5E10

  48 for 5E11

  64 for 5E12 - 5E13
  128 for 5E14 and later

- PROCESSOR MODEL must be "3B21D".
- SCSDC1, SCSDC2, SCSDC3 and SCSDC45 must all be "Y".
- AM ODD MEMORY SIZE must be 10240 (5E12 and later)

For 5E15 and later:

When VCDX is "N" and CM TYPE is not "CM3", SCSDC45 must be "Y".

When VCDX is "N" , SCSDC1, SCSDC2, and SCSDC3 must all be set to "Y".

2.7 DRM

Description: Is this a Distinctive Remote Module?

For more information on this feature see Division 2, Section 4A525.

Software Release: 5E14 and later
Default: N
Valid Entries: Y, N

Data Rules:

When DRM is "Y", DEVICE TYPEs can only be "TTY(7, 9-14, 18-19, 21, 26-34, 43, 50)", "SDL0", "SDL1", or "SDL13".

DRM/SPC Device Type Restrictions - 5E14 and later

SPC CARD PORT	IOP/PC/SLOT/P	CONTROLLER	DEVICE
2	0202	TTYC11	TTY
3	0203	TTYC11	TTY
4	0212	TTYC12	TTY
5	0213	TTYC12	TTY
6	0222	TTYC13	TTY
7	0223	TTYC13	TTY

DRM/HSI Device Type Restrictions - 5E14 and later

HSI CARD PORT	IOP/PC/SLOT/P	CONTROLLER	DEVICE
0	2002	SDLC0	SDL0
1	2012	SDLC1	SDL13
2	2022	SDLC2	SDL1

When DRM is "Y":

Copyright © 2006 Lucent Technologies

VCDX must be "N".

AM ODD MEMORY SIZE must be 10240.

PROCESSOR MODEL must be "WORKSTATION".

CM TYPE must not be entered.

IOMI BOARDS must be 1.

UTIL CKT must be "N".

RPCN000, 320 must be "N".

MHD4, 5 through MHD15 must all be "N".

SCC O must be "N" and "SCC 1" must not be entered.

MTO must be "DAT".

MT1 must not be entered.

IOP2 must be "Y" and IOP3 must be "N".

SCSDC0 through SCSDC1011 must all be "N".

CLLI must not be entered.

COLORSCAN2 LINE COUNT must be 24.

ALT BOOT DSK must be "N".

When DRM is N:

and VCDX is "N", CM TYPE must be entered.

and VCDX is N, an IOP/PC/SLOT of 030 is not allowed.

and VCDX is "N", PROCESSOR MODEL must be "3B21D".

and VCDX is "N", SCSDC0, SCSDC1, SCSDC2, SCSDC3, SCSDC45 must all be "Y".

and VCDX is "N", AM ODD MEMORY SIZE must be 10240.

VIOP/PC/SLOT/P must not be entered.

VIRTUAL DEVICE CONTROLLER must not be entered.

VIRTUAL DEVICE TYPE must not be entered.

2.8 VCDX ADDL SERIAL PORTS

Description: Is this office equipped with additional VCDX serial ports? For 5E14 and later, this field is replaced by the ADDL SERIAL PORTS field.

Software Release: 5E12 through 5E13
Required Field.
Default: N
Valid Entries: Y, N

Data Rules:

When VCDX ADDL SERIAL PORTS is "Y", VCDX must be "Y".

When VCDX is "Y" and VCDX ADDL SERIAL PORTS is "Y":

- DEVICE TYPEs can only be TTY: 7, 9-14, 18-19, 21, 28-34, 43, 50, SDL0 and SDL13.
- VCDX/SPC/ADDL SERIAL PORTS restrictions are provided in the following table:

VCDX/SPC Additional Serial Ports Device Type Restrictions - 5E12 - 5E13

SPC CARD PORT	IOP/PC/SLOT/P	CONTROLLER	DEVICE
0	0232	TTYC14	TTY18 TTY28
1	0233	TTYC14	TTY19 TTY29
2	0302	TTYC15	TTY30
3	0303	TTYC15	TTY31
4	0312	TTYC16	TTY32
5	0313	TTYC16	TTY33
6	0322	TTYC17	TTY34
7	0323	TTYC17	TTY50

2.9 ADDL SERIAL PORTS

Description: Is this office equipped with additional serial ports? This field replaced the VCDX ADDL SERIAL PORTS field.

Software Release: 5E14 and later
Default: N
Valid Entries: Y, N

Data Rules:

For 5E14 and later, when ADDL SERIAL PORTS is "Y", VCDX must be "Y", or DRM must be "Y".

When VCDX or DRM is "Y" and ADDL SERIAL PORTS is "Y", DEVICE CONTROLLER can only be "TTYC(11-17)", "SDLC0", "SDLC1" or "SDLC2".

When VCDX or DRM is "Y" and ADDL SERIAL PORTS is "N", DEVICE CONTROLLER can only be "TTYC(11-13)", "SDLC0", "SDLC" or "SDLC2".

When VCDX or DRM is "Y", DEVICE TYPEs can only be "TTY(7, 9-14, 18-19, 21, 26-34, 43, 50)", "SDL0", "SDL1", or "SDL13".

VCDX AND DRM/SPC Additional Serial Ports Device Type Restrictions - 5E14 and later

SPC CARD PORT	IOP/PC/SLOT/P	CONTROLLER	DEVICE
0	0232	TTYC14	TTY
1	0233	TTYC14	TTY
2	0302	TTYC15	TTY

Copyright © 2006 Lucent Technologies

3	0303	TTYC15	TTY
4	0312	TTYC16	TTY
5	0313	TTYC16	TTY
6	0322	TTYC17	TTY
7	0323	TTYC17	TTY

2.10 AIR EXTENSION

Description: Is the office equipped with Air Extension?

Software Release: 5E10 and later
Default: N
Valid Entries: Y, N

Data Rules:

When AIR EXTENSION is "Y", VCDX must be "Y".

2.11 CM TYPE

Description: Enter the Communication Module Type.

Required Field: 5E9(1) and earlier
Default:

For 5E6 - 5E8: 2
For 5E9(1) and later: CM2
For 5E15 and later: CM3

Valid Entries:

Valid CM TYPE Entries, 5E6 - 5E8

Entry	Definition
1	Communication Module 1.
2	Communication Module 2.

Valid CM TYPE Entries - 5E9(1) and later

Entry	Definition
CM2	Communication Module 2.
CM2C	Communication Module 2, Compact. (for CDX (Compact Digital Switch).

Valid CM TYPE Entries -5E15 and later

Entry	Definition
CM3	Communication Module 3.

Data Rules:

For 5E4(2) and later, the value of CM VINTAGE on the EQCORE form (5701 Record) and the value of CM TYPE on the ECDOPT form must be the same.

For 5E8 and earlier:
If CM TYPE is 1, EQUIPMENT BAY on the EQCMTRCU form (5812 Record) must be between 0 and 7.

For 5E4(2) and later, if LN002,322 is "Y", this field must be 2 (or CM2).

For 5E9(1) and later, if CM TYPE is "CM2":

Copyright © 2006 Lucent Technologies

- EQUIPMENT BAY on the EQCMTRCU form (5812 Record) must be between 0 and 7.
- CM VINTAGE on the EQCORE form must be 2.
- the TIME MULTIPLEX SWITCH CLI on the EQCORE form must be 20.

For 5E9(2) and later, if CM TYPE is "CM2C":

- NLI 0/1 CLI on the EQCORE form must have bit 1 set (0x2).

For 5E10 and later:

- if CM TYPE is "CM2C", CM2C COMPACT on the EQCORE form must be "Y".

For 5E12 and later, if CM TYPE is "CM2C":

- NLI 0/1 CLI on the EQNLI form must have bit 1 set (0x2).

For 5E15 and later, when CM TYPE is CM3:

IOMI BOARDS must be blank.

QGWP must be "Y".

WARNING: For 5E15 and later, CM TYPE "CM2" and "CM2C" are being replaced with the "CM3".

2.12 #IOMI BOARDS

Description: Enter the number of IOMI (Input/Output Microprocessor Interface) Boards equipped.

Required Field.
Valid Entries: 1 - 4 (boards)

Data Rules:

If the CM TYPE is 1, the entry in this field must be less than 3.

If at least one EQIM form (5700 Record) is entered, the IOMI BOARDS field on the ECDOPT form and the number of EQIM forms submitted must correspond to the following table:

IOMI BOARDS	Number of EQIM Forms
1	1 - 32
2	33 - 96
3	97 - 160
4	161 - 192

2.13 #QGWP

Description: Is the office equipped with a Quad-link GateWay Processor?

Software Release: 5E9(2) and later.
Default: N

Valid Entries: Y, N

Data Rules:

If QGWP is "Y", CM TYPE must not be "CM2C" and IOMI BOARDS must be greater than 1.

When QGWP is "Y" an EQPC form (5703 Record) must be defined with PC NO equal to 32 or 33 (i.e., QGWP).

For 5E15 and later:

When QGWP is "Y", CM TYPE must be "CM2" or "CM3".

When QGWP is "Y" and CM TYPE is "CM2",

IOMIBRDS must be greater than 1.

SCSDC45 must be "Y".

2.14 #PROCESSOR MODEL

Description: The PROCESSOR MODEL field specifies the Administrative Module equipped. For 5E9(1) and later, the 3B21D replaced the 3B20D for all new start offices. For 5E9(1) and earlier, this is a non-entry field. For 5E9(2) and later, this is a required field.

Required Field

Software Release: 5E9(2) and later.
Default: For 5E9(2) and later: 3B21D
Valid Entries:

Valid PROCESSOR MODEL Entries - 5E9(2) and later

Entry	Definition
3B21D	Model 3B21D Processor.
WORK STATION	Workstation used with VCDX (Very Compact Digital Exchange) or DRM (Distinctive Remote Module).

2.15 AUTO PWR RCVY

Description: Is the office equipped with Automatic Power Recovery?

See Division 2, Section 2W for more information on APR.

Software Release: 5E10 and later
Default: N
Valid Entries: Y, N

Data Rules:

If "Y" is entered, PROCESSOR MODEL must be "3B21D".

2.16 #PROCESSOR MEMORY TYPE

Copyright © 2006 Lucent Technologies

Description: Enter the type of memory board in the 3B Processor.

Required Field.
Default:

For 5E4(2) and 5E5: TN56

For 5E6 - 5E8: TN2012

For 5E9(1) and later: KLW (non-entry)

Valid Entries:

Valid PROCESSOR MEMORY TYPE Entries - 5E4(2) and later

Entry	Definition
1 or TN56	Main Store Memory (UN59C or UN618 packs; 2MB).
2 or TN2012	Main Store Memory (UN618 packs; 4MB).
KLW	Software Release: 5E9(1) and later. "KLW" identifies a family of circuit packs.

Data Rules:

For 5E4(2) and later, if the entry in this field is "TN2012", the UN618 field on this form must be "Y".

2.17 #PROCESSOR MEMORY SIZE

Description: Enter the size of memory (in megabytes) of the Processor.

Required Field.
Default:
For 5E5 - 5E8: 32
For 5E9(1)-5E10: 40
For 5E11 and later: 48
For 5E12 and later: 64

Valid Entries:
For 5E5 - 5E8: 32 or 36
For 5E9(1): 40 (non-entry)
For 5E9(2) - 5E10: 40 or 64
For 5E10: 40, 48, 64, or 128
For 5E11: 48, 64, or 128

For 5E12 and 5E13: 64, or 128
For 5E14 and later: 128

Data Rules:

For 5E6 and later, if the PROCESSOR MEMORY TYPE is "TN56", the PROCESSOR MEMORY SIZE must not be greater than 32. If this field is 36, UN618 must be "Y" and PROCESSOR MEMORY TYPE must be "TN2012".

2.18 #UTIL CKT

Copyright © 2006 Lucent Technologies

Description: Is the dual Utility Circuit, equipped? For 5E6 - 5E8 the UN516 circuit pack is used. For 5E9(1) and later the UN379 circuit pack is used.

Software Release: 5E6 and later
Required Field.
Valid Entries: Y, N

2.19 #AM ODD MEMORY SIZE

Description: This field indicates the amount of memory (in kilobytes) to be reserved for the ODD (Office Dependent Data).

Required Field.
Default:

5E15 and earlier: 10240

5E16 and later: 16384

Valid Entries: (see table)

Valid AM ODD MEMORY SIZE Entries

Software Release	VCDX	3B21	DRM
5E9(2) - 5E11	6144	3584	-
5E12	9216	10240	-
5E13	10240	10240	-
5E14 - 5E15	10240	10240	10240
5E16 and later	16384	16384	16384

Data Rules:

The entry in this field must equal the AM ODD MEMORY SIZE entry on the OFCOPT form.

For 5E16 and later:

When VCDX is "Y", AM ODD MEMORY SIZE must be "16384".

When DRM is "Y", AM ODD MEMORY SIZE must be "16384".

When VCDX is "N" and DRM is "N", AM ODD MEMORY SIZE must be "16384".

2.20 #DFC BOARD

Description: This field indicates the Disk File Control Board. Added in 5E11, this field was removed as a 5E12 Software Update.

Software Release: 5E11 - 5E12 Required Field.
Default: UN580B
Valid Entries: UN580 or UN580B

2.21 #DISK DRIVE TYPE

Description: Enter the type of Disk Drive in the office.

Copyright © 2006 Lucent Technologies

Required Field.

Valid DISK DRIVE TYPE Entries - 5E6	
Entry	**Definition**
1 or SCSI600	Small Computer Systems Interface.
2 or SCSI322	Small Computer Systems Interface.
3 or CDC340	340 Mb disk.
4 or CDC300	Control Data 300MB drive (KS-22048, L1).

Valid DISK DRIVE TYPE Entries - 5E7	
Entry	**Definition**
1 or SCSI600	600 Mb Small Computer Systems Interface.
2 or CDC340	340 Mb disk.
3 or SCSI322	300 Mb Small Computer Systems Interface.

Valid DISK DRIVE TYPE Entries - 5E8	
Entry	**Definition**
1 or SCSI600	600 Mb Small Computer Systems Interface.
2 or 3.5I_SCSI	3.5 inch format.

NOTE: Effective for 5E6 - 5E8 new ship offices, SCSI600 is the only valid DISK DRIVE TYPE entry. Effective for 5E9(1) through 5E13 new ship offices, "SCSI1GB" (1000 MB) is the only valid DISK DRIVE TYPE entry. For 5E14 and later "SCSI2GB" is the only valid DISK DRIVE TYPE.

Valid DISK DRIVE TYPE Entries	
Entry	**Definition**
SCSI1GB	5E9(1) through 5E13: One gigabyte (1000 Mb).
SCSI2GB	5E14 and later: Two gigabyte(2000 Mb).

2.22 #UN618

Description: Does the memory controller have UN618 or UN59C memory controller boards installed? A "Y" in this field indicates UN618 installed; "N" implies UN59C installed.

NOTE: For 5E9(1) and later, with the implementation of the 3B21D processor, this field is not used.

Software Release: 5E4(2) - 5E8
Required Field.
Valid Entries: Y, N

Data Rules:

If the PROCESSOR MEMORY TYPE field is "TN2012", this field must be "Y".

If "N" is entered, "TN56" must be entered in the PROCESSOR MEMORY TYPE field.

CNI EQUIPAGE

The following fields (Section 2.23 - Section 2.25) are used for the Common Network Interface equipment.

2.23 #RPCN000,320

Description: Is the CNI Ring Processor Control Node equipped?

This field (two fields prior to 5E5) determines if the RPCN (Ring Processor Control Nodes) are equipped; they are directly linked to the LINK NODE 001/LINK NODE 326 fields.

Required Field.

Copyright © 2006 Lucent Technologies

Data Rules:
A toll office must have RPCN000,320 equipped. If RPCN000,320 is "Y", at least one Link Node pair must be equipped (LN001,321 through LN006,326).

RPCN000,320 must be equipped before LN001,321 through LN006,326 can be assigned.

If COMMON CHAN SIG on the OFCOPT form is "Y", RPCN000,320 must be equipped (and vice versa).

For 5E8 and earlier, if RPCN000,320 is equipped, DSCH CHANNEL 12 must be equipped.

WARNING: For 5E15 and later, RPCN000,320 is not supported with CM TYPE of "CM3".

2.24 LINK EQUIP

Description: This field determines if the Link Nodes are equipped. With 5E9 (1) and earlier, 5 link node pairs can be provided. With 5E9(2) and later, the maxium number of link nodes is increased to 19 pairs.

Link Nodes are 4.8 or 56 kbs "A-links" to an STP (Signal Transfer Point) and are used for a CNI (Common Network Interface) ring associated with CCS (Common Channel Signaling). Link Nodes are equipped in pairs. For example, LN001 and LN321 equals one pair, etc. Link Node pairs are assigned in the same manner (LN001 and LN321; LN002 and LN322, etc.)
Default: N
Valid Entries: Y, N

2.25 LINK NODE USEAGE

Description: This field defines the way the CNI node operates.

Software Release: 5E3 and later.
Valid Entries:

Valid LINK NODE USEAGE Entries

Entry	Definition
4.8kbs	Software Release: 5E9(1) and earlier. Low-speed signaling link; connects to transmission equipment.
1 or 56kbs	High-speed signaling link; connects to transmission equipment.
IUN	Software Release: 5E9(1) and earlier. Interface Process Message Switch User Node.
DLN	Software Release: 5E3 and later. Direct Link Node; connects to switch; restricted to node 2 only.

Data Rules:

Link Node assignments must conform to the recommended CNI (Common Network Interface) ring configurations (as reflected in the Allowable Node Configuration table below). Nodes cannot be added randomly into the CNI ring, but rather, must be planned carefully to allow for graceful future growth.

For 5E9(1) and earlier, the chart below indicates the allowable equipped node (LN00*32*) configurations. All other node configurations are invalid. The 0 in the left column of the table indicates that RPCN000,320 is equipped (an entry of "Y" in the RPCN000,320 field). 1 through 6 indicate entries of "Y" in fields LN001,321 through LN006,326, respectively.

Allowable Node Configurations

0	1					
0	1		3			

0		2	3			
0	1	2	3			
0	1	2	3			6
0	1	2	3		5	6
0	1	2	3	4	5	6

The following rules reflect the node configurations reflected in the table above.

If LN002,322 is equipped, the LINK NODE USEAGE must be "DLN".

If LN001,321, LN003,323, LN004,324, LN005,325 or LN006,326 are equipped, the corresponding LINK NODE USEAGE must be either "4.8KBS", "56KBS" or "IUN" (and not "DLN").

If either LN001,321, LN002,322, LN003,323, LN004,324, LN005,325 or LN006,326 are not equipped, the corresponding LINK NODE USEAGE must not be entered.

RPCN000,320 must be equipped if LN001,321 through LN006,326 are to be equipped.

If LN002,322 is equipped, LN004,324 must be equipped.

If LN004,324 is equipped, LN005,325 must be equipped.

If LN005,325 is equipped, LN006,326 must be equipped.

If LN006,326 is equipped, LN001,321 through LN003,323 must be equipped.

For 5E9(2) and later, if the Link Node is equipped, LINK NODE USEAGE must be provided.

If the Link Node is unequipped, then the LINK NODE USEAGE field must be blank.

If RPCN000,320 is not equipped. LN004,324 must not be equipped.

If RPCN000,320 is equipped. At least LN004,324 must be equipped.

Link Nodes must be added in the sequence depicted in the following table.

Link Node Equipage Sequence	
Equipage Sequence	Link Node
1 (first)	LN004,324
2	LN003,323
3	LN002,322
4	LN001,321
5	LN018,338
6	LN017,337
7	LN016,336
8	LN015,335
9	LN014,334
10	LN013,333
11	LN012,332
12	LN011,331
13	LN028.348
14	LN027,347
15	LN026,346
16	LN025,345
17	LN024,344
18	LN023,343
19	LN022,342
20 (last)	LN021,341

NOTE: If LN001,321 is entered, LN003,323 is required to be equipped instead of LN002,322.

Copyright © 2006 Lucent Technologies

TCP/IP DATALINK SELECTION

The following field Section 2.26 is used to describe the type of link used.

2.26 TRFM RNM OPT

Description: The value of this field indicates which type of link is used for the TCP/IP link.

Software Release: 5E15 and later
Default: NONE
Valid Entries:

Valid TRFM RNM OPT Entries - 5E15 and later

Entry	Definition
BOTH	TRFM and RNM links are the TCP/IP links.
NONE	No TCP/IP links.
RNM	Remote Network Management Link is the TCP/IP link.
TRFM	Traffic Measurement Link is the TCP/IP link.

Data Rules:

When TRFM RNM OPT is "BOTH", "RNM" or "TRFM", DRM must be "Y".

When TRFM RNM OPT is set to "BOTH", "RNM" or "TRFM", then the ACT field for SFID 532 must be set to "Y" on the SFSYS form (5713-1 Record).

The TRFM RNM OPT entered must be equal to the TRFM RNM OPT on the OFCOPT form (5509 Record).

2.27 CLLI

Description: Enter the CLLI (Common Language Location Identifier). The CLLI uniquely identifies existing and proposed buildings which contain personnel and/or equipment, and certain customer locations.

The format for CLLI is as follows:

Valid CLLI Entries

Entry	Definition
PLACE	Character positions 1 through 4.
STATE	Character positions 5 and 6.
BUILDING	Character positions 7 and 8.
ENTITY	Character positions 9 through 11.

Example CHCGILMOCO Entry

Entry	Definition
CHCG	PLACE (Chicago)
IL	STATE (Illinois)
MO	BUILDING (Monroe)
CO	ENTITY (Control Group 0)

For more detailed information on Common Language Location Identifiers, refer to Practice 795-100-100.

2.28 #DISK CONFIG

Description: This field determines the Disk Size.

Required Field.
Valid Entries:
5E3 through 5E6: 300A, 340A, 340B and 340C

Copyright © 2006 Lucent Technologies

5E7: 340A, 340B, 340C
5E8 - 5E9(2): 66 (non-entry)
5E10 through 5E13: 11 (non-entry)
5E14 - 5E15: 21 (non-entry)
5E16 and later: 22 (non-entry)

NOTE: The "11" DISK CONFIG entry may be referred to as "1010" in other 5ESS Switch documentation.

The appropriate disk configuration for an office is based on formulas in 5E DOPS which relate to total SM ODD size and AMA requirements of the office. Related information is entered in ODD DISK SIZE on the OFCOPT form.

The relationship between the DISK CONFIGURATION and the ODD DISK SIZE is as follows:

Valid DISK CONFIGURATION Entries

Software Release	Values	ODD DISK SIZE on OFCOPT form
5E5	300A, 340A	14000
	340B	20000
	340C	24000
5E6	300A, 340A	
	340B, 340C	24000
5E7	340A	
	340B, 340C	8992
5E8	SCSI600	8992
5E9(1) through 5E13	SCSI1GB	8992
5E14 and later	SCSI2GB	11600

MOVING HEAD DISKS - MHD 0-15

NOTE: TOTAL SIZE IN MEGABYTES

The fields SM ODD, AMA and DISK ODD (KB) are not enterable. The data in these fields are calculated internally from the DISK CONFIGURATION and MOVING HEAD DISKS fields (MHD 0-15).

Refer to the 5E DOPs Users Guide (5D5-060-100) for more information.

The MHD fields (Section 2.29 - Section 2.30) are used indicate the equipage of Moving Head Disks. For 5E6 - 5E8, the MHD fields consist of two columns, "EQUIPAGE" and "OPTIONING". The values entered into these two fields are dependent upon the value entered into the DISK CONFIGURATION field. Fields MHD 0 through MHD 13 must be assigned in pairs (such as MHD 0,1 and MHD 4,5).

A minimum of two pairs of disks are required. "Y" must always be entered in the MHD0,1 EQUIPAGE and MHD2,3 EQUIPAGE fields.

All information must be entered in sequence. For example, if "Y" is entered in the MHD6,7 EQUIPAGE field, "Y" must be entered in the MHD4,5 EQUIPAGE field.

NOTE: There is no OPTIONING field associated with the SCSI322 and SCSI600 DISK EQUIPAGE field for MHD 14, 15 because these are on-line spares which are not required to be equipped in sequence with, or in relation to, MHD0,1 thru MHD12,13 or MHD16,17 thru 30,31. MHD 14 provides an on-line backup for disk 0; disk 15 provides an on-line backup for disk 1.

Copyright © 2006 Lucent Technologies

2.29 OPTIONING

Description: The name of this field was changed to PCT SMODD/AMA (Percent Switching Module Office Dependent Data/Automatic Message Accounting) in 5E8. See PCT SMODD/AMA below for usage information.

2.30 PCT SMODD/AMA

Description: The PCT SMODD/AMA (disk optioning) column sets the use of disk memory.

For 5E6 and 5E7, multiple disk optioning (1,2, or 3) is supported in all 340 configurations for DISK CONFIGURATIONs "340A", "340B" or "340C". Other than the minimum required disk pairs (MHD0,1 and MHD2,3), additional disks can be configured as indicated in the 5E6 and 5E7 valid entries below.

For 5E8 and later, 8992 is the only valid DISK CONFIGURATION. Valid disk optioning (1 - 5) is indicated in the 5E8 and later valid entries below.

Software Release: 5E6 and later.
Required Field.
Default:
For MHD0,1: R
For MHD2,3: R

NOTE: MHD0,1 and MHD2,3 cannot be entered.
Valid Entries:

Valid PCT SMODD/AMA Entries
5E6 - 5E7

Entry	Definition
blank	Unknown disk optioning.
R	Required.
1	AMA (Automatic Message Accounting).
2	Half AMA/half ODD (Office Dependent Data).
3	ODD (Office Dependent Data).

Valid PCT SMODD/AMA Entries
5E8 - 5E9(2)

Entry	Definition
1	00% SMODD; 100% AMA.
2	25% SMODD; 75% AMA.
3	50% SMODD; 50% AMA.
4	75% SMODD; 25% AMA.
5	100% SMODD; 0% AMA.

Valid PCT SMODD/AMA Entries
5E10 and later

Entry	Definition
1	00% SMODD; 100% AMA.
2	25% SMODD; 75% AMA.
3	50% SMODD; 50% AMA.

Data Rules:

For 5E8 - 5E9, SMODD, if equipped, must precede AMODD. That is, the following sequence must be used when defining the PCT SMODD/AMA. If a 5 is entered, it must be the first entry in the PCT SMODD/AMA field. Any other 5 used, must follow the first 5 entry. Then, a mixed option can be selected using 2, 3, or 4. Only one of these (2, 3, or 4) can be entered per office. Following the 2, 3, or 4 entry, one or more 1(s) can

Copyright © 2006 Lucent Technologies

be entered. See table.

Valid PCT SMODD/AMA Sequence		
SMODD	**SMODD/AMODD**	**AMODD**
Entry 1 0 or more	Entry 2, 3, or 4 0 or 1	Entry 1 0 or more

The 5 DOPS symbols can be related to the above choices in the following ways:

The DSK6100 field provides the number of Disk Pairs using the 5 option.

The DSKSPL6 field provides the mixed option in the following way:

If the field contains the 0.00, make no entry;

Or, if the field contains 0.25, enter a value of 2;

Or, if the field contains 0.50, enter a value of 3;

Or, if the field contains 0.75, enter a value of 4.

The DSK6000 field provides the number of Disk Pairs using the 1 option.

For 5E2 through 5E7, the following sequence must be used when defining the PCT SMODD/AMA. If "300A" is entered in the DISK CONFIGURATION field,

- The entries in the MHD0,1 and MHD2,3 OPTIONING fields must be "R" and the corresponding MHD EQUIPAGE field must be "Y".
- "N" must be entered in MHD4,5, MHD6,7, MHD8,9, MHD10,11 and MHD12,13 EQUIPAGE fields.
- No entries are permitted in the MHD4,5, MHD6,7, MHD8,9, MHD10,11 and MHD12,13 OPTIONING fields (these columns must each be blank).

If "340A" is entered in the DISK CONFIGURATION field,

- The entries in the MHD0,1 and MHD2,3 OPTIONING fields must be "R" and the corresponding MHD EQUIPAGE field must be "Y".
- If the MHD4,5 EQUIPAGE field is "Y", the entry in the MHD4,5 OPTIONING field must be 1 or 2.
- If the MHD6,7, MHD8,9, MHD10,11 or MHD12,13 EQUIPAGE field is "Y", the entry in the corresponding MHD OPTIONING field must be 1.
- If the MHD4,5, MHD6,7, MHD8,9, MHD10,11 or MHD12,13 EQUIPAGE field is "N", the entry in the corresponding MHD OPTIONING field must be left blank.
- If a MHD OPTIONING field is entered, the corresponding MHD EQUIPAGE field must have a value of "Y".

If "340B" or "340C" is entered in the DISK CONFIGURATION field,

Copyright © 2006 Lucent Technologies

- The entries in the MHD0,1, MHD2,3 and MHD4,5 OPTIONING fields must be "R" and the corresponding MHD EQUIPAGE field must be "Y".
- If the MHD6,7 EQUIPAGE field is entered as "Y", the entry in the MHD6,7 OPTIONING field must be either 1, 2, or 3.
- If the MHD8,9, MHD10,11, or MHD12,13 EQUIPAGE field is entered as "Y", the entry in the corresponding MHD OPTIONING field must be 1.
- If the MHD6,7, MHD8,9, MHD10,11, or MHD12,13 EQUIPAGE field is entered as "N", the entry in the corresponding MHD OPTIONING field must be blank.
- If a MHD OPTIONING field is entered, the corresponding MHD EQUIPAGE field must have a value of "Y".

For 5E10 and later,

- when MHD4,5 has PCT SMODD option of 2, then PCT SMODD for MHD6,7 can only be option 1.
- when MHD6,7 has PCT SMODD option of 2, then PCT SMODD for MHD8,9 can only be option 1.
- when MHD8,9 has PCT SMODD option of 2, then PCT SMODD for MHD10,11 can only be option 1.
- when MHD10,11 has PCT SMODD option of 2, then PCT SMODD for MHD12,13 can only be option 1.
- PCT SMODD for MHD6,7 can only be option 3 if MHD4,5 has PCT SMODD option of 3.
- PCT SMODD for MHD8,9 can only be option 3 if MHD6,7 has PCT SMODD option of 3.
- PCT SMODD for MHD10,11 can only be option 3 if MHD8,9 has PCT SMODD option of 3.
- PCT SMODD for MHD12,13 can only be option 3 if MHD10,11 has PCT SMODD option of 3.

When MHD4, 5 has PCT SMODD option of 1, then PCT SMODD for MHD6, 7 can only be option 1.

When MHD6, 7 has PCT SMODD option of 1, then PCT SMODD for MHD8, 9 can only be option 1.

When MHD8, 9 has PCT SMODD option of 1, then PCT SMODD for MHD10, 11 can only be option 1.

When MHD10, 11 has PCT SMODD option of 1, then PCT SMODD for MHD12, 13 can only be option 1.

MOVING HEAD DISKS SCSI600 OR SCSI322 ONLY - MHD 16-31

For 5E6 - 5E8, for offices equipped with a SCSI600 or SCSI322 DISK DRIVE TYPE, the DISK EQUIPAGE field is used to indicate whether the MHD pairs are equipped. A "Y" or "N" is entered in each of the seven MHD pair fields: MHD16,17 through MHD30,31. There is no OPTIONING field for MHD 16-31 because they are entirely AMA-configured.

2.31 DISK EQUIPAGE

Description: Are any of the MHD pair fields MHD16,17 through MHD30, 31 equipped?

Software Release: 5E6 - 5E8
Required Field.
Valid Entries: Y, N
Default Value: N

Data Rules:

If any MHDs (16-31) are equipped, the office must have "IOP2" set to "Y".

- If "Y" is entered in the MHD16,17 DISK EQUIPAGE field, "Y" must be entered in the MHD12,13 DISK EQUIPAGE field. (As noted above, MHD14 and 15 are for on-line spares and thus may be equipped in any sequence.)
- If "Y" is entered in the MHD18,19 DISK EQUIPAGE field, "Y" must be entered in the MHD16,17 DISK EQUIPAGE field.
- If "Y" is entered in the MHD20,21 DISK EQUIPAGE field, "Y" must be entered in the MHD18,19 DISK EQUIPAGE field.
- If "Y" is entered in the MHD22,23 DISK EQUIPAGE field, "Y" must be entered in the MHD20,21 DISK EQUIPAGE field.
- If "Y" is entered in the MHD24,25 DISK EQUIPAGE field, "Y" must be entered in the MHD22,23 DISK EQUIPAGE field.
- If "Y" is entered in the MHD26,27 DISK EQUIPAGE field, "Y" must be entered in the MHD24,25 DISK EQUIPAGE field.
- If "Y" is entered in the MHD28,29 DISK EQUIPAGE field, "Y" must be entered in the MHD26,27 DISK EQUIPAGE field.
- If "Y" is entered in the MHD30,31 DISK EQUIPAGE field, "Y" must be entered in the MHD28,29 DISK EQUIPAGE field.

EVEN/ODD SPU

For 5E9(1) and later, the following fields (Section 2.32 - Section 2.33) define the SPU (SCSI Peripheral Unit) position of the MHDs. When a pair of MHDs is added, there is an even one and an odd one (i.e., MHD4 is even and MHD5 is odd for MHD4,5). The even MHD is always positioned on the lower growth unit and the odd MHD is positioned on the upper growth unit.The lower growth unit uses SBUS 0 and SBUS 2. The upper growth unit uses SBUS 1 and 3. Each MHD pair which is equipped, must have an entry in the EVEN SPU field associated with its MHD number.

It is only necessary to enter EVEN SPU positions as the ODD one is automatically populated, based on its EVEN SPU entry. The ODD SPU is always 1 plus the EVEN SPU value.

The restrictions for designating SPU positions are provided in the table below. Also refer to the "Valid/Invalid IOP/PC/SLOT/P Entries" tables provided with the IOP/PC/SLOT/P field description for a summary of related even/odd SPU entries.

Disk Software Restrictions

MHD	SPU
4	4 or 20
6	18
8	20 or 24
10	22
12	26
14	4 or 20 or 24

Data Rules:
SPU assignments for the MHDs cannot be duplicated by IOP/PC/SLOT assignments on the FLEX IOP LIST. The following table summarizes invalid SPU combinations.

Invalid Combinations of SPUs and Flex PC Slots - 5E9(1) and later

EVEN SPU	IOP/PC/SLOT(P)	ODD SPU	IOP/PC/SLOT(P)
04	031 or 032	05	131 or 132
20	232 or 233	21	332 or 333
22	230 or 231	23	330 or 331
24	222 or 223	25	322 or 323
26	220 or 221	27	320 or 321

For 5E9(2) and later, MHD or IOP/PC/SLOT assignments in the above table must also not duplicate MT1 SPU assignments.

2.32 EVEN SPU

Description: Enter the EVEN SPU SCSI Peripheral Unit position.
Valid Entries: 4, 18, 20, 22, 24, 26

Data Rules:

If EQUIPAGE is "N", SPU must be blank.

If MHD8,9 is equipped and MHD14 is equipped, and MHD4 SPU is 20, then MHD14 SPU must be 4 and MHD8 SPU must be 24.

If MHD14 SPU is 20 then MHD8,9 must be unequipped.

If MHD14 SPU is 4, MHD4,5 must be "N" or MHD4 SPU must be 20.

If MHD14 SPU is 20, MHD4,5 must be "N" or MHD4 SPU must be 4.

If MHD14 SPU is 24, MHD4 SPU must be 20 or MHD8 SPU must be 20.

If MHD4 SPU is 20 and MHD8,9 is equipped, MHD8 SPU must be 24.

For 5E9(1) and later,

- if MHD8,9 is equipped and MHD4 SPU is 4, MHD8 SPU must be 20.
- if MHD4 SPU is greater than 17, SCSDC16 must be "Y".
- if MHD6 SPU is entered, SCSDC16 must be "Y".
- if SCSDC16 is "Y", either MHD4 SPU must be greater than 17 or MHD6 SPU must be entered.

2.33 ODD SPU

Copyright © 2006 Lucent Technologies

Description: This is a non-entry field which is automatically calculated (EVEN SPU plus 1). Thus, the entries in this field will be 5, 19, 21, 23, 25, or 27.

SWITCHING CONTROL CENTER

The following fields (Section 2.34 - Section 2.35) are used to set up the SCC 0 and 1 (Switching Control Center 0 and 1). The SCC provides facilities to administer, monitor, control and maintain the 5ESS Switch from a centralized remote location.

2.34 #SCC 0

Description: Is SCC 0 (Switching Control Center 0) equipped on the office?

Required Field.
Default: Y
Valid Entries: Y, N

Data Rules:

SCC 0 is located on IOP 0, Community 0, Slot 0 and Channel Position 1.

2.35 SCC 1

Description: Is SCC 1 (Switching Control Center 1) equipped on the office?

Required Field.
Default: Y
Valid Entries: Y, N

Data Rules:

SCC 1 is located on IOP 1, Community 0, Slot 0 and Channel Position 1.

SCAN POINT & SIGNAL DISTRIBUTOR CONTROLLER

The following fields (Section 2.36 - Section 2.43) define indicate whether or not Scan Points exist for various hardware. SCSDC boards are used to monitor the operation of the system and are required in all offices.

2.36 SCSDC0

Description: The only acceptable value in this field is "Y" to indicate that a scan point exists.

For 5E6 and later Software Releases, this field is automatically populated.

Required Field.
Valid Entries: Y
Default Value: Y

Data Rules:

SCSDC0 is located on IOP 0, COMMUNITY 0, SLOT 2.

2.37 SCSDC1

Copyright © 2006 Lucent Technologies

Description: The only acceptable value in this field is "Y" to indicate that a scan point exists.

For 5E6 and later Software Releases, this field is automatically populated.

Required Field.
Valid Entries: Y
Default Value: Y

Data Rules:

SCSDC1 is located on IOP 1, COMMUNITY 0, SLOT 2.

2.38 SCSDC2

Description: The only acceptable value in this field is "Y" to indicate that a scan point exists.

For 5E6 and later Software Releases, this field is automatically populated.

Data Rules:

SCSDC2 is located in IOP 0, COMMUNITY 0, SLOT 1.

Required Field.

Valid Entries: Y
Default Value: Y

2.39 SCSDC3

Description: The only acceptable value in this field is "Y" to indicate that a scan point exists.

For 5E6 and later Software Releases, this field is automatically populated.

Required Field.
Valid Entries: Y
Default Value: Y

Data Rules:

This entry is required when located in IOP 1, COMMUNITY 0, SLOT 1.

2.40 SCSDC45

Description: The only acceptable entry for this field is "Y".

Required Field.
Default:

For 5E14 and earlier: Y
For 5E15 and later: N

Valid Entries: Y
Default Value: Y

Copyright © 2006 Lucent Technologies

Data Rules:

SCSDC4 is located in IOP 0, COMMUNITY 1, SLOT 0, and SCSDC5 is located in IOP 1, COMMUNITY 1, SLOT 0.

The SCSDC45 entry is required in all CM1 and CM2 offices for alarming and craft control of CM1 hardware.

For 5E5 and earlier, CM2 offices with 9 or more Module Message Processor (MMP) Communities (or greater than 128 SMs) per side installed should have SCSDC45 equipped.

For 5E6 and later, SCSDC45 is always required for the CMPU and is thus automatically populated.

WARNING: For 5E15 and later, SCSDC45 is not needed in and office with CM TYPE of "CM3".

2.41 #SCSDC67

Description: SCSDC 6 and 7 are optional telephone operating company-assigned boards. These SCSDCs can be ordered for miscellaneous alarms.

Required Field.
Valid Entries: Y, N
Default Value: 5E8 only: Y

Data Rules:

SCSDC6 is located in IOP 0, COMMUNITY 1, SLOT 1 and SCSDC7 is located in IOP 1, COMMUNITY 1, SLOT 1.

2.42 #SCSDC89

Description: SCSDC 8 and 9 are required for offices equipped with CNI (Common Network Interface) cabinets or CM2 offices. CNI cabinets are determined by the equipage of RPCN000,320.

Required Field.
Valid Entries: Y, N
Default Value: Y

Data Rules:

SCSDC8 is located in IOP 0, COMMUNITY 1, SLOT 2 and SCSDC9 is located in IOP 1, COMMUNITY 1, SLOT 2.

For 5E6 - 5E8, if CM TYPE on this form is 2, SCSDC89 must be "Y".

For 5E9(1) and later, if CM TYPE on this form is CM2, SCSDC89 must be "Y".

For 5E6 - 5E8, SCSDC89 are also required in offices equipped with SCSI322 disks having any of the MHDs in the second community equipped (MHDs 16-31).

2.43 #SCSDC1011

Description: Is the SCSDC1011 equipped?

Required Field.

Copyright © 2006 Lucent Technologies

Valid Entries: Y, N
Default Value: Y

Data Rules:

SCSD10 is located in IOP 0, COMMUNITY 1, SLOT 3 and SCSD11 is located in IOP 1, COMMUNITY 1, SLOT 3. If CM TYPE is 1, SCSDC1011 must be "N".

For 5E6 - 5E8, if CM TYPE on this form is 2, SCSDC1011 must be "Y". For 5E9(1) and later, if CM TYPE on this form is CM2, SCSDC1011 must be "Y".

2.44 #SCSDC16

Description: Is the SCSDC16 equipped?

Software Release: 5E9(1) and later.
Required Field.
Default: N
Valid Entries: Y, N

Data Rules:

When MHD4 SPU is greater than 17, SCSDC16 must be "Y".

When MHD6 SPU is entered, SCSDC16 must be "Y".

When SCSDC16 is "Y", either MHD4 SPU must be greater than 17, or MHD6 SPU must be entered.

For 5E10 and later, when SCSDC16 is "Y", either MHD4 or MHD14 or MHD15 or MT1 must be equipped in SPU 18-27 or MHD6 SPU must be known.

MAGNETIC TAPE DEVICES

The following optional fields (Section 2.45 - Section 2.49) are used to define Magnetic Tape Controllers 0 and 1.

2.45 #MTC0

Description: The MTC0 field name was changed to MT0 in 5E9(1). This field name applies to 5E8 and earlier. The MT0 is located in: IOP 0, COMMUNITY 0, SLOT 3. Enter the type of magnetic tape drive one. See MT0 for 5E9(1) and later usage information.

Valid MTC0 Entries, 5E6 - 5E8

Entry	Definition
1 or Keystone III	Read/write only in high density (6250bpi).
2 or Enhanced Keystone III	Buffered keyboard which offers significantly better performance than the unbuffered version.

2.46 #MT0

Description: Enter the type of magnetic tape controller for drive one. The MT0 is located in: IOP 0, COMMUNITY 0, SLOT 3.

Software Release: 5E9(1) and later.

Copyright © 2006 Lucent Technologies

Valid Entries:

Valid MT0 Entries, 5E9(1)	
Entry	**Definition**
1 or SCSI9TRK	Keystone III; read/write only in high density (6250bpi) with SCSI9TRK interface.

Valid MT0 Entries, 5E9(2) and later	
Entry	**Definition**
1 or SCSI9TRK	Keystone III; read/write only in high density (6250bpi) with SCSI9TRK interface.
2 or DAT	Digital Audio Tape.

2.47 MTC1

Description: The MTC1 field name was changed to MT1 in 5E9(1). This field name applies to 5E8 and earlier. See MT1 for 5E9(1) usage information.

Valid MTC1 Entries, 5E6 - 5E8	
Entry	**Definition**
1 or Keystone III	Read/write only in high density (6250bpi).
2 or Enhanced Keystone III	Buffered keyboard which offers significantly better performance than the unbuffered version.

Data Rules:

If MTC1 is equipped, it is located in IOP 1, COMMUNITY 0, SLOT 3. IOP1, PCO 0, SLOT 3 has been assigned to MTC1 (second magnetic tape). If it is not installed, the slot can be used for other devices, SDL or TTY.

2.48 MT1

Description: This field indicates the type of magnetic tape drive two.

Valid MT1 Entries, 5E9(1) and later	
Entry	**Definition**
1 or SCSI9TRK	Keystone III; read/write only in high density (6250bpi) with SCSI9TRK interface.

Valid MT1 Entries, 5E9(2) and later	
Entry	**Definition**
1 or SCSI9TRK	Keystone III; read/write only in high density (6250bpi) with SCSI9TRK interface.
2 or DAT	Digital Audio Tape

Data Rules:

If MT1 is equipped, it is located in IOP 1, COMMUNITY 0, SLOT 3. IOP1, PCO 0, SLOT 3 has been assigned to MT1 (second magnetic tape). If it is not installed, the slot can be used for other devices, SDL or TTY.

If MT1 is "DAT", MT1 SPU must be entered.

2.49 MT1 SPU

Description: This field indicates the position of the DAT (Digital Audio Tape) for the MT1.

Copyright © 2006 Lucent Technologies

Software Release: 5E9(2) and later.
Valid Entries: 5, 21, or 25

Data Rules:

The position of the MT1 SPU cannot duplicate the position of the MHD or IOP/PC/SLOT/P positions.

For 5E10 and later, when MT1 SPU is 21 or 25, SCSDC16 must be "Y".

MAINTENANCE TELETYPEWRITER

The following fields (Section 2.50 - Section 2.52) are used to determine the characteristics of the maintenance teletypewriter.

2.50 #MCC BOARD TYPE

Description: Enter the MCC (Master Control Center) Board Type. Note that the UN583 automatically equips the entire set of IOP/PC Replacement and DFC (Disk File Controller) Replacement boards. Note that this field was removed for 5E9(1)-5E9(2) and readded in 5E10.

Software Release: 5E10 and later.
Valid Entries:
For 5E12 and earlier: TN983 or UN583
For 5E13: TN983 or UN597
For 5E14 and later: UN597

Data Rules:

For 5E10 through 5E13, when PROCESSOR MODEL is "3B21D", MCC BOARD TYPE must not be "TN983".

If "UN583" or "UN597" is not entered, the fourth digit of the IOP/PC/SLOT/P must be "2" or "3".

2.51 #MTTY TYPE

Description: Enter the type of MTTY (maintenance terminal) used in the office. The MTTY is also referred to as the MCC (Master Control Center).

Required Field.
Default:

5E4(2) - 5E8: COLOR SCAN2
Valid Entries:

Valid MTTY TYPE Entries, 5E4(2) - 5E8

Entry	Definition
1 or OLD B&W	Black and White terminal.
2 or COLOR SCAN10	Color Scan terminal.
3 or VT100	VT100 terminal.
4 or COLOR	Color WECO KS terminal.

WECOKS	
5 or COLOR SCAN2	Color Scan2 terminal.

NOTE: For 5E4 - 5E8, for new ship offices, "COLOR SCAN2" is the only valid option.

Data Rules:

If "COLOR SCAN2" is entered, the COLOR SCAN2 LINE COUNT must be entered.

Valid MTTY TYPE Entries - 5E9(1) and later

Entry	Definition
1 or ATT/260C	Color terminal replacing Color Scan2.
2 or OLD B&W	Black and white terminal.
3 or COLOR SCAN10	Color Scan10 terminal.
4 or VT100	VT100 terminal.
5 or WECO KS	Color WECO KS terminal.
6 or COLOR SCAN2	Color Scan2 terminal.

NOTE: For 5E9(1) and later, for new ship offices, "ATT/260" is the only valid entry.

When MTTY TYPE is "COLOR SCAN2" or "ATT/260C", COLORSCAN2 LINE COUNT must be entered.

2.52 COLORSCAN2 LINE COUNT

Description: This field defines the number of lines that will appear on the terminal screen.

Software Release: 5E6 and later
Default: 24
Valid Entries: 24 or 47 (lines)

Data Rules:

For 5E6 - 5E8, if the MTTY TYPE is "COLORSCAN2", COLORSCAN2 LINE COUNT must be entered.

For 5E9(1) and later, if the MTTY TYPE is "COLOR SCAN2" or "ATT/260C", COLORSCAN2 LINE COUNT must be entered.

2.53 ALT BOOT DSK

Description: Is the Alternate Boot Disk feature equipped? Before this feature can be activated, Secured Feature 284 must be set to "Y". See Division 2, Section 4A284.

Software Release: 5E13 and later
Default: N
Valid Entries: Y, N

Copyright © 2006 Lucent Technologies

Data Rules:

When ALT BOOT DSK is "Y", SFID 284 ACT must be "Y" on the SFSYS form.

When ALT BOOT DSK is "Y", MCC BOARD TYPE must be "UN597".

When ALT BOOT DSK is "Y", MHD14 or MHD15 must be "Y".

INPUT/OUTPUT PROCESSOR EQUIPAGE

The following fields (Section 2.54 - Section 2.55) are used to indicate if the office is equipped with additional IOPs. (IOPs 0 and 1 are equipped with all offices and thus are not specified on this form.) For 5E9(1) and later, SPUs 18-27 are logically part of the Disk File Controller System. Thus, equipping IOPs 2 and 3 is not required to support Disk Drives in SPUs 18-27. However, if Disk Drives are not equipped in SPUs 18-27 and IOP 2 or 3 is grown in, those slots are still available for use as IOP peripheral communities.

2.54 #IOP2

Description: Does the office have an IOP2? Each office may have 4 IOPs (numbered 0, 1, 2 and 3). IOPs 0 and 1 are required, while 2 and3 are optional.

Software Release: 5E6 and later
Required Field.
Default: N
Valid Entries: Y, N

Data Rules:

For 5E6 - 5E8, IOP2 is required for equipped SCSI disks and for any equipped MHDs in 2nd community (MHDs 16-31).

2.55 #IOP3

Description: Does the office have an IOP3?

Software Release: 5E7 and later
Required Field.
Default: N
Valid Entries: Y, N

Data Rules:

For 5E12 and earlier, IOP2 must be equipped before IOP3 can be equipped.

FLEXIBLE IOP SELECTION

The following fields (Section 2.56 - Section 2.63) are used to define the variable ports in the Input/Output Processor. The Flexible IOP Selection enables the addition and deletion of IOP devices within IOP communities. Available with 5E4(2) and later, Optional IOP devices are not restricted to preassigned slots.

The IOP/PC/SLOT is reserved for SCSDC17 (SCAN POINT and SIGNAL DISTRIBUTOR CONTROLLER). SCSDC17 will automatically be provided to the user if the DISK TYPE is a SCSI322. Entries 2122/2123 are not allowed.

Copyright © 2006 Lucent Technologies

Refer to ECD/SG Data Base Manual (No. 235-600-3XX, where XX is the generic) for the standard association of controller to device (what the recommended configuration was before Flexible IOP Selection). Note that Flexible IOP Selection may vary from the standard configuration presented in the document referenced above.

2.56 IOP/PC/SLOT/P

Description: This field is a 4-digit number that defines the IOP/PC/SLOT/P selection. Each office may have 4 IOPs (Input/Output Processors). Each IOP contains 4 PCs (Peripheral Controllers). Each PC contains 4 SLOTs. The SLOTs are occupied by a DEVICE CONTROLLER. For offices with MCC BOARD TYPE of "TN983", two ports are available (2 and 3). For offices with MCC BOARD TYPE of "UN583" or "UN597" , 4 ports are available (0, 1, 2, 3).

Valid IOP/PC/SLOT/P Entries

Component	Entry
IOP	0, 1, 2, or 3
PC	0, 1, 2 or 3
SLOT	0, 1, 2 or 3

Valid Port Entries

Component	Entry
P(ORT)	2 or 3; when MCC BOARD TYPE is "TN983".
P(ORT)	0, 1, 2, or 3; when MCC BOARD TYPE is "UN583" or "UN597".

The following table contains invalid IOP/PC/SLOT/P entries that must not be used for FLEXIBLE IOP assignments:

Invalid IOP/PC/SLOT/P(ort) Entries

Entry	Entry
0002/0003	1002/1003
0012/0013	1012/1013
0022/0023	1022/1023
0032/0033 Note: Valid for 5E9(1) and later	1102/1103
0102/0103	1112/1113
0112/0113	1122/1123
0122/0123	1132/1133
0132/0133	1332/1333
0302/0303, except for VCDX	0332/0333
2000/3000	

NOTE: Also refer to the Invalid Combinations of SPUs and FLEX PC Slots table provided in the discussion of the EVEN/ODD SPU fields.

Data Rules:

Once an IOP/PC/SLOT/P(ORT) is assigned, it may not be used again.

If the IOP/PC/SLOT/P(ORT) is entered, the DEVICE CONTROLLER and the DEVICE TYPE must also be entered.

If the IOP/PC/SLOT is unique, the DEVICE CONTROLLER must be unique.

If an IOP2 or IOP3 value is not assigned, the entry in the IOP/PC/SLOT/P field must not begin with a 2 or 3.

If there are two magnetic tape drives in the office, an entry in the IOP/PC/SLOT/P field of 1032 or 1033 may not be assigned.

Copyright © 2006 Lucent Technologies

2.57 DEVICE CONTROLLER

Description: Once an IOP/PC/SLOT/P(ORT) is assigned, a device controller is assigned. Two types of controllers are accepted: SDLC (Synchronous Data Link) and TTYC (Teletypewriter Controller). Any SDLC can be used to control an SDL DEVICE TYPE, and any TTYC can be used to control a TTY DEVICE TYPE.

Valid DEVICE CONTROLLER Entries

Entry	Entry
SDLC0	TTYC11
SDLC2	TTYC12
SDLC3	TTYC13
SDLC4	TTYC14
SDLC5	TTYC15
SDLC6	TTYC16
SDLC7	TTYC17
SDLC8	TTYC18
SDLC9	TTYC19
SDLC32	TTYC20
SDLC34	TTYC21
SDLC36	TTYC22
SDLC38	TTYC23
SDLC40	TTYC24
SDLC42	TTYC25
TTYC26	TTYC27
TTYC28	TTYC29

Data Rules:

If the DEVICE CONTROLLER is entered, the IOP/PC/SLOT/P(ORT) must be entered. If the DEVICE CONTROLLER is entered, the DEVICE TYPE must be entered. If the DEVICE TYPE is entered, the DEVICE CONTROLLER must be entered.

A teletypewriter controller must control a device of the same type (TTY). A synchronous data link controller must control a device of the same type (SDL). In other words, if the DEVICE CONTROLLER entry begins with "TTY...", the DEVICE TYPE entry must begin with "TTY...". (The same condition applies to "SDL..." entries.)

If DEVICE TYPE is "TTY7", LOCAL TRAF MEAS CHANNEL on the OFCOPT form must be equipped.

2.58 DEVICE TYPE

Description: For 5E9(2) and earlier, up to two DEVICE TYPES can be assigned to each DEVICE CONTROLLER. 5E10 and later with MCC BOARD TYPE of "UN583" or "UN597", up to four DEVICE TYPES can be assigned.

Once a DEVICE TYPE is assigned, it cannot be used again. If the DEVICE TYPE is entered, the IOP/PC/SLOT/P(ORT) must be entered. If the DEVICE TYPE is entered, the DEVICE CONTROLLER must be entered.

For offices with MCC BOARD TYPE of "TN983", an SDLC can control up to two SDLs. However, an SDLC is required for every AMA (Automatic Message Accounting) or NP (Network Protocol) type of SDLs. Note that NP, SDL, and AMA SDLs cannot share the same controller. However, SDL9 and SDL18 can share a controller. Each TTYC DEVICE CONTROLLER controls up to two TTY DEVICE TYPES. The BAUD RATE for each "TTY" must be known. The BAUD RATE range for the two "TTYs" controlled by a "TTYC" is 300, 1200, 2400, 4800 and 9600. The exceptions are the printer DEVICE TYPES (i.e., TTY43, TTY45). A device type must agree with its controller type; protocols should not be mixed.

- A TTYC (TN74B) supports all TTY types

Copyright © 2006 Lucent Technologies

- A SDLC (TN75C) supports all SDL types
- A SDLC (TN82) supports SDL8 and SDL13

For offices with MCC BOARD TYPE of "UN583" or "UN597", SDLCs can control up to 4 SDLs and therefore mixing restrictions are not applicable. The UN583 or the UN597 is a multi-purpose board which supports all device/controller options.

Customers are allowed to input either the **device type** or **device name**.

SDL Device Type/Device Name Cross-Reference

Device Type	Name	Protocol	Baud Rate
SDL0	SCAN	SDL	4800
SDL1	SCC	SDL	1200
SDL2	MLT2	SDL	2400
SDL3	EADAS	SDL	variable
SDL4	CTTU	SDL	1200
SDL5	RNMS	SDL	9600
SDL6	ATPRC	NP	9600
SDL8	AMADL2	AMA	variable
SDL9	RMAS	NP	2400
SDL11	NO2SES	SDL	2400
SDL13	AMADLI	AMA	variable
SDL14	MACOSS	NP	9600
SDL18	OSPSRC	NP	4800
SDL20	RMS01	SDL	4800
SDL25	TOPASO	NP	9600
SDL26	TOPAS1	NP	9600
SDL32	APDL1	NP	9600
SDL34	APDL2	NP	9600
SDL36	APDL3	NP	9600
SDL38	APDL4	NP	9600
SDL40	APDL5	NP	9600
SDL42	APDL6	NP	9600

TTY Device Type/Device Name Cross-Reference

Device Type	Name	Alias	Baud Rate
TTY7	TRAFFPRT	ttyh	5E10 and earlier: 1200 5E11 and later: 300, 1200, 2400, 4800, 9600
TTY8	SLC96	ttyi	300
TTY9	STLWS5	ttyj	4800
TTY10	STLWS6	ttyk	4800
TTY11	STLWS1	ttyl	4800
TTY12	STLWS2	ttym	4800
TTY13	STLWS3	ttyn	4800
TTY14	STLWS4	ttyo	4800
TTY15	RCVRSB	ttyp	1200
TTY16	RCVNAC	ttyq	1200
TTY17	ALITRSB	ttyr	1200
TTY18	RCVSCC1	ttys	1200
TTY19	RCVSCC2	ttyt	1200
TTY20	BELTA	ttyu	300
TTY21	LOCRCV	ttyv	4800
TTY22	RMTRCV	ttyw	1200
TTY23	BALANCE	tty8	4800
TTY26	CALEASAS	tty9	9600
TTY27	CALEAPRT	ttyx	9600
TTY28	STLWS7	ttyC	4800
TTY29	STLWS8	ttyD	4800
TTY30	STLWS9	ttyE	4800
TTY31	STLWS10	ttyF	4800
TTY32	STLWS11	ttyG	4800
TTY33	STLWS12	ttyH	4800

Copyright © 2006 Lucent Technologies

TTY34	STLWS13	ttyI	4800
TTY43	OFFRECPRT	ttyR	1200
TTY45	COT	ttyT	1200
TTY46	BELTB	ttyU	300
TTY50	STLWS14	ttyY	4800

Entry	Definition
SDL0	This device type entry indicates whether SCANS is equipped. Software Change Administration and Notification System is the standard mechanism used for distribution of BWMs (Broadcast Warning Messages) to the SCCS (Switching Control Center System) and program updates (binary data) to the 5ESS Switch. SCANS provides generic overwrite information under control of the SCCS.
SDL1	Software Release : 5E14 and later. This device type entry indicates whether SCC (Switching Control Center) is equipped for this office. VCDX or DRM only.
SDL2	This device type entry indicates the equipage of a port for the Integrated MLT-2. The entry must be designated in the IMLT-2 field on the OFCOPT form.
SDL3	This device type entry indicates whether EADAS is equipped. If the EADAS LINK is equipped on the OFCOPT form, it must be equipped on the ECDOPT form (and vice versa). If SDL3 is equipped, the BAUD RATE (variable) must be entered. The EADAS (Engineering and Administration Data Acquisition System) collects, stores and analyzes traffic data and works with downstream systems like TDAS (Traffic Data Analysis System) for engineering reports and further analysis of data.
SDL4	This device type entry indicates whether any CTTU (Centralized Trunk Test Unit) is equipped for this office. If a CTTU form (5518 Record) exists, SDL4 must be equipped.
SDL5	This device type entry indicates whether a RNMS (Remote Network Management System) is equipped for this office.
SDL6	Software Release: 5E14 and later: This NP device type entry indicates whether ATPRC (CONNECTVU ATP Recent Change) is equipped.
SDL8	This device type entry indicates whether AMA Datalink2 is equipped. If SDL8 is equipped, the BAUD RATE (variable) must be entered.
SDL9	This NP device type entry indicates whether RMAS is equipped. If RMAS SUPPORT is equipped on the OFCOPT form, it must be equipped on the ECDOPT form and vice versa. RMAS (Remote Memory Administration System) provides a centralized, improved human interface for the change, administration and verification of the database stored in Electronic Switching Systems.
SDL11	This SDL device type entry indicates whether SES (Service Evaluation System) 2 is equipped. If there is a TKGRP form with a TRKCLS of "SES", SDL11 must be equipped. The SES mechanizes the evaluation of network services by using large-scale sampling procedures and provides reports of equipment blockage and failure, no supervision and call completion analysis to downstream systems.
SDL13	This AMA device type entry indicates whether AMA Datalink1 is equipped. If SDL13 is equipped, the BAUD RATE (variable) must be entered.
SDL14	This NP device type entry indicates whether MACOSS is equipped. SDL14 can only be equipped in CNI-equipped offices. If SDL14 is assigned, RPCN000,320 must be equipped.
SDL18	This NP device type indicates whether OSPSRL is equipped.
SDL20	This SDL device type entry indicates whether RMS01 is equipped. If a trunk group has been defined on the TKGRP form with a TRKCLS of "RMSD3", SDL20 must be entered.
SDL25	This NP device type entry indicates whether TOPAS0 is equipped. SDL25 can only be equipped in CNI-equipped offices. If SDL25 is assigned, RPCN000,320 must be equipped. If a trunk group has been defined on the TKGRP form with a TRKCLS of "TOPAS", SDL25 or SDL26 must be entered.
SDL26	This NP device type entry indicates if TOPAS1 is equipped. SDL26 can only be equipped in CNI-equipped offices. If SDL26 is assigned, RPCN000,320 must be equipped. If a trunk group has been defined on the TKGRP form with a TRKCLS of "TOPAS", SDL25 or SDL26 must be entered.
SDL32	This NP device entry indicates whether APDL01 is equipped.
SDL34	This NP device type entry indicates whether APDL02 is equipped.
SDL36	This NP device type entry indicates whether APDL03 is equipped.
SDL38	This NP device type entry indicates whether APDL04 is equipped.
SDL40	This NP device type entry indicates whether APDL05 is equipped.
SDL42	This NP device type entry indicates whether APDL06 is equipped.
TTY7	This entry indicates whether TRAFFPRT is equipped. If the LOCAL TRAF MEAS CHANNEL field on the OFCOPT form is "Y", TTY7 must be equipped.
TTY8	This entry indicates whether SLC 96 FRED is equipped. This terminal is also entered as a TMT (Transmission Maintenance Terminal) which is used with integrated SLC 96 (Integrated Subscriber Loop

Copyright © 2006 Lucent Technologies

	Carrier 96) facilities.
TTY9	This entry indicates whether STLWS 5 is equipped. Software Release: 5E6 and earlier. If there is a TLWS form for STLWS 5 (Work Station Number 7), TTY9 must be equipped. Software Release: 5E7 - 5E8. If there is a TLWS form with a DEVICE ID of "j", TTY9 must be equipped.
TTY10	This entry indicates whether STLWS 6 is equipped. Software Release: 5E6 and earlier. If there is a TLWS form for STLWS 6 (Work Station Number 8), TTY10 must be equipped. Software Release: 5E7 - 5E8. If there is a TLWS form for STLWS 6 with a DEVICE ID of "k", TTY10 must be equipped.
TTY11	This entry indicates whether STLWS 1 is equipped. Software Release: 5E6 and earlier. If there is a TLWS form for STLWS 1 (Work Station Number 3), TTY11 must be equipped. Software Release: 5E7 - 5E8. If there is a TLWS form for STLWS 1 with a DEVICE ID of "l", TTY11 must be equipped.
TTY12	This entry indicates whether STLWS 2 is equipped. Software Release: 5E6 and earlier. If there is a TLWS form for STLWS 2 (Work Station Number 4), TTY12 must be equipped. Software Release: 5E7 - 5E8. If there is a TLWS form for STLWS 2 with a DEVICE ID of "l", TTY12 must be equipped.
TTY13	This entry indicates whether STLWS 3 is equipped. Software Release: 5E6 and earlier. If there is a TLWS form for STLWS 3 (Work Station Number 5), TTY13 must be equipped. Software Release: 5E7 - 5E8. If there is a TLWS form with a DEVICE ID of "n", TTY13 must be equipped.
TTY14	This entry indicates whether STLWS 4 is equipped. Software Release: 5E6 and earlier. If there is a TLWS form for STLWS 4 (Work Station Number 6), TTY14 must be equipped. Software Release: 5E7 - 5E8. If there is a TLWS form with a DEVICE ID of "o", TTY14 must be equipped.
TTY15	This entry indicates whether RCV RSB is equipped. A RCV RSB (Recent Change and Verify, Repair Service Bureau) terminal is capable of performing all RCV operations as well as a subset of MCC commands.
TTY16	This entry indicates whether RCV NAC is equipped.
TTY17	This entry indicates whether ALIT/RSB is equipped. The Automatic Line Insulation Testing/Repair Service Bureau performs direct connect tests through the 5ESS Switch without the use of auxiliary test equipment. These results are available at RSBs, as well as at the office MCC, SCC and office belt line. The terminal is located at a remote site.
TTY18	This entry indicates whether RCV SCC is equipped. Recent Change and Verify, Switching Control Center (RCV SCC) is a general maintenance terminal. All commands can be executed from this terminal.
TTY19	This entry indicates whether RCV SCC/CIC is equipped. Recent Change and Verify, Switching Control Center/Circuit Input Center is a general maintenance terminal. All commands can be executed from this terminal.
TTY20	This entry indicates whether BELT LINE A is equipped. A belt line is provided in the Central Office to permit maintenance personnel to communicate with the system from locations other than the MCC.
TTY21	This entry indicates whether LOCAL RCV is equipped. Local Recent Change and Verify is a general maintenance terminal. All commands can be executed from this terminal.
TTY22	This entry indicates whether REMOTE RCV is equipped. Remote Recent Change and Verify is a Recent Change only terminal. It is restricted to Recent Change commands.
TTY23	Software Release: 5E11 and later. This entry indicates whether the BALANCE feature is equipped.
TTY26	Software Release: 5E14 and later. This entry equips the CALEA Input TTY
TTY27	Software Release: 5E14 and later. This entry equips the CALEA Output TTY
TTY28	Software Release: 5E7 and later. This entry equips STLWS 7.
TTY29	Software Release: 5E7 and later. This entry equips STLWS 8.
TTY30	Software Release: 5E7 and later. This entry equips STLWS 9.

Copyright © 2006 Lucent Technologies

TTY31	Software Release: 5E7 and later. This entry equips STLWS 10.
TTY32	Software Release: 5E7 and later. This entry equips STLWS 11.
TTY33	Software Release: 5E7 and later. This entry equips STLWS 12.
TTY34	Software Release: 5E7 and later. This entry equips STLWS 13.
TTY43	This entry equips a OFFRECPRT (On-line Office Record Print Channel) terminal.
TTY45	This entry equips a COT (Customer Originated Trace) terminal.
TTY46	This entry equips a BELT LINE B terminal.
TTY50	Software Release: 5E7 and later. This entry equips STLWS 14.

2.59 LOGIN TERMINAL

Description: Will the terminal have password protection?

This field allows the terminal to provide password protection. Each TTY DEVICE TYPE, except TTY7, TTY23, TTY27, TTY43, and TTY45 (terminals with printers), must specify if a login terminal and password may be enabled.
Default: N
Valid Entries: Y, N

Data Rules:

An entry is not allowed in the LOGIN TERMINAL field when "SDL" is entered in the DEVICE TYPE field.

If any SDL device type, or TTY7, TTY23, TTY27 TTY43, or TTY45 is entered, LOGIN TERMINAL must be blank and AUTH CHK must be blank.

If DEVICE TYPE is "TTY26" then LOGIN must be "N".

2.60 AUTH CHK

Description: Enter the type of Authority Checking for Flexible IOP. Authority checking defines the type of device security. This feature allows input messages to be divided into categories corresponding to different maintenance or administrative job functions which can then be assigned to specific devices.

Software Release: 5E9(1) and later.
Valid Entries:

Valid AUTH CHK Entries

Entry	Description
U	User. The device is configured to have both login/password and user authority. Users in this mode are restricted to executing commands in command groups assigned both to their login and to the device. If no restrictions are placed on the device, user restrictions still apply and command logging and alarming can still occur.
T	Terminal. The device is configured to have both login/password and terminal authority. Users in this mode are restricted to executing commands in command groups assigned to the device. If no restrictions are placed on the device, command logging and alarming can still occur.
N	None. The device is configured with login/password enabled but authority checking disabled. (This is the mode which existed prior to 5E9(1).) Access to terminals configured this way is blocked until the system administrator assigns logins via "admin". Devices configured with neither login nor authority checking have a terminal display with no login prompt and with no restrictions.

Data Rules:

If LOGIN TERMINAL is "N", AUTH CHK must be "T" or "N".

If LOGIN TERMINAL is "Y", AUTH CHK must be "T", "N", or "U".

Copyright © 2006 Lucent Technologies

if DEVICE TYPE is "TTY26" then AUTH CHK must be "t"

2.61 QTYOF LINES

Description: This field indicates the number of lines that will appear on the screen. A Teletypewriter Controller can control up to two teletypewriters.

Software Release: 5E6 and later
Valid Entries: 24 or 47

Data Rules:

A QTYOF LINES must be entered for all TTY types except DEVICE TYPES TTY7, TTY43, and TTY45 (terminals with printers).

2.62 BAUD RATE

Description: This field sets the data-link speed. For the AMA (Automatic Message Accounting) channels only, the data-link connection is also set. The entry depends on the application (i.e., DEVICE TYPE).
Valid Entries:

Valid BAUD RATE Entries

Entry	Device Type
2400, 4800, or 9600	SDL3.
4800dial, 9600dial, or 9600pri	SDL8 and SDL13 for TN75C.
56000sw or 56000pri	SDL8 and SDL13 for TN82.
300, 1200, 2400, 4800, 9600, or 19200	
blank	TTY27, TTY43, or TTY45, and all SDLs except SDL3, SDL8, and SDL13.

"Dial" refers to a dial-up phone line, "PRI" refers to a private phone line and "SW" refers to an Accunet-switched 5B (Lucent Techologies).

Data Rules:

If the DEVICE TYPE used by a particular DEVICE CONTROLLER has a BAUD RATE of 9600, no other DEVICE TYPE can be assigned to that DEVICE CONTROLLER, except VCDX, DRM or MCC BOARD type of "UN583" or "UN597".

If the DEVICE TYPE is "SDL8" or "SDL13", the BAUD RATE must be entered. If the DEVICE TYPE is not "SDL3", " SDL8", or "SDL13", the BAUD RATE must be blank. Note that this restriction does not exist for MCC BOARD TYPE of "UN583" or "UN597".

2.63 TERM TYPE

Description: If the assigned DEVICE TYPE is a Supplementary Work Station ("TTY9" to "TTY14"), the TERM TYPE must be entered. If the DEVICE TYPE is not from " TTY9" to "TTY14", the TERM TYPE must not be entered.

Valid TERM TYPE Entries

Entry	Definition
BW	Black and White.

CL	Color.

VIRTUAL IOP SELECTION

The following fields (Section 2.64 - Section 2.66) are used to define Virtual TTYs for the DRM (Distinctive Remote Module). Only DRM currently supports the ordering of VIRTUAL TTYs. Virtual IOP Selection allows a user at an ASM (Administrative Services Module) that is remotely located from the DRM to open a window that acts as a cut-through to the DRM and provides UNIX, RC/V, or STLWS (Supplementary Trunk Line Work Station) functionality as if a local physical TTY was being used. For more information on the DRM feature see Division 2, Section 4A525.

2.64 VIOP/PC SLOT/P

Description: This field is a 4-digit number that defines the VIOP/PC/SLOT/P selection. Only VIOP 0 is currently supported. All four ports are valid.

Software Release: 5E14 and later
Valid Entries:

Valid IOP/PC/SLOT/P Entries

Component	Entry
IOP	0
PC	0, 1, 2 or 3
SLOT	0, 1, 2 or 3
PORT	0, 1, 2 or 3

Data Rules:

VIOP/PC/SLOT/P must be unique.

If VIOP/PC/SLOT is unique, VIRTUAL DEVICE CONTROLLER must be unique. If VIOP/PC/SLOT is not unique, VIRTUAL DEVICE CONTROLLER must not be unique.

When VIOP/PC/SLOT/P are entered, VIRTUAL DEVICE CONTROLLER must be entered.

When VIOP/PC/SLOT/P are entered, VIRTUAL DEVICE TYPE must be entered.

2.65 VIRTUAL DEVICE CONTROLLER

Description: Enter the VTTYC (Virtual Teletypewriter Controller).

Software Release: 5E14 and later
Valid Entries: VTTYC0-10 or VTTYC30-34

Data Rules:

When VIRTUAL DEVICE CONTROLLER is entered, VIOP/PC/SLOT/P must be entered.

When VIRTUAL DEVICE CONTROLLER is entered, VIRTUAL DEVICE TYPE must be entered.

2.66 VIRTUAL DEVICE TYPE

Description: Enter the Virtual Device Type. VTTY7 (Traffic Printer), VTTY23 (Balance), VTTY43 (Office Records Printer), and VTTY45 (COT) are permanently assigned devices. The remaining VTTYs are dynamically provisioned as UNIX, RC/V, or STLWS when a cut-through window is requested.

Copyright © 2006 Lucent Technologies

Software Release: 5E14 and later
Valid Entries: ***NOTE:*** Users are allowed to input the device type or the device name.

NOTE: VTTYs and TTYs with the same channel ids cannot be equipped at the same time.

TTY Device Type/Device Name Cross-Reference

Device Type	Name
VTTY0	
VTTY2	
VTTY7	VTRAFFPRT
VTTY9	
VTTY10	
VTTY11	
VTTY12	
VTTY13	
VTTY14	
VTTY22	
VTTY23	VBALANCE
VTTY28	
VTTY29	
VTTY30	
VTTY31	
VTTY32	
VTTY33	
VTTY34	
VTTY43	VOFFRECPRT
VTTY50	
VTTY56	
VTTY57	
VTTY58	
VTTY59	
VTTY60	
VTTY61	
VTTY62	
VTTY63	
VTTY64	
VTTY65	
VTTY66	

Data Rules:

VIRTUAL DEVICE TYPE must be unique.

When VIRTUAL DEVICE TYPE is entered, VIOP/PC/SLOT/P must be entered.

When VIRTUAL DEVICE TYPE is entered, VIRTUAL DEVICE CONTROLLER must be entered.

TTYs AND VTTYs THAT CANNOT BE EQUIPPED AT THE SAME TIME

PHYSICAL TTY	VIRTUAL TTY A	VIRTUAL TTY B
TTY7	VTTY7	
TTY22	VTTY22	
TTY23	VTTY23	
TTY43	VTTY43	
TTY45	VTTY45	
TTY9	VTTY9	VTTY62
TTY10	VTTY10	
TTY11	VTTY11	
TTY12	VTTY12	
TTY13	VTTY13	
TTY14	VTTY14	
TTY28	VTTY28	
TTY29	VTTY29	
TTY30	VTTY30	
TTY31	VTTY31	
TTY32	VTTY32	VTTY63
TTY33	VTTY33	VTTY64

Copyright © 2006 Lucent Technologies

TTY34	VTTY34	VTTY65
TTY50	VTTY50	VTTY66

If the physical TTY is equipped, the virtual TTY(s) on that row cannot be equipped. If either of the virtual TTYs on a row are equipped, the physical TTY cannot be equipped.

```
SCREEN 1 OF 11                    5ESS Switch
ecdopt                     OFFICE DATA ADMINISTRATION
(5706)                            ECD OPTIONS

*1. KEY                     0
#2. CUSTOMER TYPE           ___            11. AUTO PWR RCVY         N
#3. TIME ZONE               ___                PROCESSOR MEMORY TYPE KLW
#4. VCDX                    N             #13. PROCESSOR MEMORY SIZE 64
#5. VCDX ADDL SERIAL PORTS  N             #14. UTIL CKT              _
#6. AIR EXTENSION           N             #15. AM ODD MEMORY SIZE    10240
 7. CM TYPE                 CM2                DISK DRIVE TYPE       SCSI1GB
#8. IOMI BOARDS             _
 9. QGWP                    N
#10. PROCESSOR MODEL        3B21D
```

```
SCREEN 2 OF 11                    5ESS Switch
ecdopt                     OFFICE DATA ADMINISTRATION
(5706)                            ECD OPTIONS

                              CNI EQUIPAGE

                                                                LINK NODE
#17. RPCN000,320 N                              LINK     EQUIP     USAGE
                                          26. LN018,338   N     34. _______
                       LINK NODE          27. LN017,337   N     35. _______
     LINK      EQUIP     USAGE            28. LN016,336   N     36. _______
#18. LN004,324   N    22. _______         29. LN015,335   N     37. _______
 19. LN003,323   N    23  _______         30. LN014,334   N     38. _______
 20. LN002,322   N    24. _______         31. LN013,333   N     39. _______
 21. LN001,321   N    25. _______         32. LN012,332   N     40. _______
                                          33. LN011,331   N     41. _______
```

```
SCREEN 3 OF 11                    5ESS SWITCH
ecdopt                     OFFICE DATA ADMINISTRATION
(5706)                            ECD OPTIONS

          CNI EQUIPAGE

                       LINK NODE
    LINK      EQUIP     USAGE
42. LN028,348   N     50. _______
```

```
43. LN027,347   N     51. _______
44. LN026,346   N     52. _______
45. LN025,345   N     53. _______
46. LN024,344   N     54. _______
47. LN023,343   N     55. _______
48. LN022,342   N     56. _______
49. LN021,341   N     57. _______
```

```
SCREEN 4 OF 11                    5ESS Switch
ecdopt                     OFFICE DATA ADMINISTRATION
(5706)                            ECD OPTIONS

                                          MOVING  HEAD  DISKS
 58. CLLI ____________                                          EVEN  ODD
                        DISK   EQUIPAGE  PCT SMODD/AMA  DISK     SPU   SPU
                       MHD0,1         Y         R      MHD0,1     00    01
 DISK CONFIG 11        MHD2,3         Y         R      MHD2,3     02    03
                       MHD4,5    #65. N     74. _      MHD4,5    83. __   __
                       MHD6,7    #66. N     75. _      MHD6,7    85. __   __
  TOTAL SIZE (MB)      MHD8,9    #67. N     76. _      MHD8,9    87. __   __
 SM ODD        ____   MHD10,11  #68. N     77. _      MHD10,11  89. __   __
 AMA           ____   MHD12,13  #69. N     78. _      MHD12,13  91. __   __
 DISK ODD (KB) ______ MHD14     #70. _                MHD14     93. __
                      MHD15     #71. _                MHD15              __
```

```
SCREEN 5 OF 11                    5ESS Switch
ecdopt                     OFFICE DATA ADMINISTRATION
(5706)                            ECD OPTIONS

SWITCHING CONTROL CENTER                MAGNETIC TAPE DEVICES
#95. SCC 0 Y                         #106. MT0     SCSI9TRK
 96. SCC 1 Y                          107. MT1     ____________________
                                      108. MT1 SPU __

    SCAN POINT & SIGNAL                 MAINTENANCE TELETYPEWRITER
   DISTRIBUTOR CONTROLLER            #109. MCC BOARD TYPE        _____
     SCSDC0  Y   #101. SCSDC45   Y   #110. MTTY TYPE             ATT/260C
#98. SCSDC1  Y   #102. SCSDC67   _    111. COLORSCAN2 LINE COUNT __
#99. SCSDC2  Y   #103. SCSDC89   Y    112. ALT BOOT DSK          N
#100. SCSDC3 Y   #104. SCSDC1011 Y
                  105. SCSDC16   N      INPUT/OUTPUT PROCESSOR EQUIPAGE
                                     #113. IOP2 N
                                     #114. IOP3 N
```

```
SCREEN 6 OF 11                    5ESS Switch
ecdopt                     OFFICE DATA ADMINISTRATION
(5706)                            ECD OPTIONS
```

```
                          115. FLEXIBLE IOP SELECTION
   IOP/PC    DEVICE      DEVICE    LOGIN  AUTH  QTYOF   BAUD   TERM
   SLOT/P  CONTROLLER     TYPE   TERMINAL CHK   LINES   RATE   TYPE
 1. _____    _______    __________    _     _     __   _________  __
 2. _____    _______    __________    _     _     __   _________  __
 3. _____    _______    __________    _     _     __   _________  __
 4. _____    _______    __________    _     _     __   _________  __
 5. _____    _______    __________    _     _     __   _________  __
 6. _____    _______    __________    _     _     __   _________  __
 7. _____    _______    __________    _     _     __   _________  __
 8. _____    _______    __________    _     _     __   _________  __
 9. _____    _______    __________    _     _     __   _________  __
10. _____    _______    __________    _     _     __   _________  __
```

```
SCREEN 7 OF 11                   5ESS Switch
ecdopt                     OFFICE DATA ADMINISTRATION
(5706)                           ECD OPTIONS

                          115. FLEXIBLE IOP SELECTION
   IOP/PC    DEVICE      DEVICE    LOGIN  AUTH  QTYOF   BAUD    TERM
   SLOT/P  CONTROLLER     TYPE   TERMINAL CHK   LINES   RATE    TYPE
11. _____    _______    __________    _     _     __   _________  __
12. _____    _______    __________    _     _     __   _________  __
13. _____    _______    __________    _     _     __   _________  __
14. _____    _______    __________    _     _     __   _________  __
15. _____    _______    __________    _     _     __   _________  __
16. _____    _______    __________    _     _     __   _________  __
17. _____    _______    __________    _     _     __   _________  __
18. _____    _______    __________    _     _     __   _________  __
19. _____    _______    __________    _     _     __   _________  __
20. _____    _______    __________    _     _     __   _________  __
```

```
SCREEN 8 OF 11                   5ESS Switch
ecdopt                     OFFICE DATA ADMINISTRATION
(5706)                           ECD OPTIONS

                          115. FLEXIBLE IOP SELECTION
   IOP/PC    DEVICE      DEVICE    LOGIN  AUTH  QTYOF   BAUD    TERM
   SLOT/P  CONTROLLER     TYPE   TERMINAL CHK   LINES   RATE    TYPE
21. _____    _______    __________    _     _     __   _________  __
22. _____    _______    __________    _     _     __   _________  __
23. _____    _______    __________    _     _     __   _________  __
24. _____    _______    __________    _     _     __   _________  __
25. _____    _______    __________    _     _     __   _________  __
26. _____    _______    __________    _     _     __   _________  __
27. _____    _______    __________    _     _     __   _________  __
28. _____    _______    __________    _     _     __   _________  __
```

```
29. ____    ______     __________     _     _     __   _________   __
30. ____    ______     __________     _     _     __   _________   __
```

```
SCREEN 9 OF 11                    5ESS Switch
ecdopt                     OFFICE DATA ADMINISTRATION
(5706)                            ECD OPTIONS

                           115. FLEXIBLE IOP SELECTION
   IOP/PC    DEVICE      DEVICE    LOGIN  AUTH  QTYOF   BAUD    TERM
   SLOT/P  CONTROLLER     TYPE   TERMINAL CHK   LINES   RATE    TYPE
31. ____     ______    __________     _     _     __   _________   __
32. ____     ______    __________     _     _     __   _________   __
33. ____     ______    __________     _     _     __   _________   __
34. ____     ______    __________     _     _     __   _________   __
35. ____     ______    __________     _     _     __   _________   __
36. ____     ______    __________     _     _     __   _________   __
37. ____     ______    __________     _     _     __   _________   __
38. ____     ______    __________     _     _     __   _________   __
39. ____     ______    __________     _     _     __   _________   __
40. ____     ______    __________     _     _     __   _________   __
```

```
SCREEN 10 OF 11                   5ESS Switch
ecdopt                     OFFICE DATA ADMINISTRATION
(5706)                            ECD OPTIONS

                           115. FLEXIBLE IOP SELECTION
   IOP/PC    DEVICE      DEVICE    LOGIN  AUTH  QTYOF   BAUD    TERM
   SLOT/P  CONTROLLER     TYPE   TERMINAL CHK   LINES   RATE    TYPE
41. ____     ______    __________     _     _     __   _________   __
42. ____     ______    __________     _     _     __   _________   __
43. ____     ______    __________     _     _     __   _________   __
44. ____     ______    __________     _     _     __   _________   __
45. ____     ______    __________     _     _     __   _________   __
46. ____     ______    __________     _     _     __   _________   __
47. ____     ______    __________     _     _     __   _________   __
48. ____     ______    __________     _     _     __   _________   __
49. ____     ______    __________     _     _     __   _________   __
50. ____     ______    __________     _     _     __   _________   __
```

```
SCREEN 11 OF 11                   5ESS Switch             _
ecdopt                     OFFICE DATA ADMINISTRATION
(5706)                            ECD OPTIONS

                           115. FLEXIBLE IOP SELECTION
   IOP/PC    DEVICE      DEVICE    LOGIN  AUTH  QTYOF   BAUD    TERM
   SLOT/P  CONTROLLER     TYPE   TERMINAL CHK   LINES   RATE    TYPE
51. ____     ______    __________     _     _     __   _________   __
```

Copyright © 2006 Lucent Technologies

```
52. ____    ______    _________    _    _    __    ________    __
53. ____    ______    _________    _    _    __    ________    __
54. ____    ______    _________    _    _    __    ________    __
55. ____    ______    _________    _    _    __    ________    __
56. ____    ______    _________    _    _    __    ________    __
57. ____    ______    _________    _    _    __    ________    __
58. ____    ______    _________    _    _    __    ________    __
59. ____    ______    _________    _    _    __    ________    __
```

Figure 1 SAMPLE ECDOPT FORM 5E13 SOFTWARE RELEASE

```
SCREEN 1 OF 18                    5ESS Switch
ecdopt                     OFFICE DATA ADMINISTRATION
(5706)                            ECD OPTIONS

*1. KEY                     _
#2. AT&T LONG DISTANCE      _              12. AUTO PWR RCVY          _
#3. TIME ZONE               ___                PROCESSOR MEMORY TYPE ______
#4. VCDX                    _                  PROCESSOR MEMORY SIZE ___
#5. DRM                     _             #15. UTIL CKT               _
#6. ADDL SERIAL PORTS       _             #16. AM ODD MEMORY SIZE     _____
 7. AIR EXTENSION           _                  DISK DRIVE TYPE        __________
 8. CM TYPE                 ____
#9. IOMI BOARDS             _
```

```
SCREEN 2 OF 18                    5ESS Switch
ecdopt                     OFFICE DATA ADMINISTRATION
(5706)                            ECD OPTIONS

                                CNI EQUIPAGE

                                                                  LINK NODE
#18. RPCN000,320 _                                  LINK     EQUIP     USAGE
                                              27. LN018,338   _     35. ______
                        LINK NODE             28. LN017,337   _     36. ______
     LINK      EQUIP     USAGE                29. LN016,336   _     37. ______
#19. LN004,324   _    23. ______             30. LN015,335   _     38. ______
 20. LN003,323   _    24  ______             31. LN014,334   _     39. ______
 21. LN002,322   _    25. ______             32. LN013,333   _     40. ______
 22. LN001,321   _    26. ______             33. LN012,332   _     41. ______
                                              34. LN011,331   _     42. ______
```

```
SCREEN 3 OF 18                    5ESS SWITCH
ecdopt                     OFFICE DATA ADMINISTRATION
(5706)                            ECD OPTIONS

          CNI EQUIPAGE
```

```
                        LINK NODE
    LINK       EQUIP     USAGE
43. LN028,348   _      51. _______
44. LN027,347   _      52. _______
45. LN026,346   _      53. _______
46. LN025,345   _      54. _______
47. LN024,344   _      55. _______
48. LN023,343   _      56. _______
49. LN022,342   _      57. _______
50. LN021,341   _      58. _______
```

```
SCREEN 4 OF 18                    5ESS Switch
ecdopt                     OFFICE DATA ADMINISTRATION
(5706)                            ECD OPTIONS

                                          MOVING  HEAD  DISKS
 59. CLLI ____________                                          EVEN  ODD
                         DISK   EQUIPAGE  PCT SMODD/AMA  DISK    SPU   SPU
                        MHD0,1         _         _      MHD0,1    __    __
 DISK CONFIG __         MHD2,3         _         _      MHD2,3    __    __
                        MHD4,5    #66. _     75. _      MHD4,5  84. __    __
                        MHD6,7    #67. _     76. _      MHD6,7  86. __    __
  TOTAL SIZE (MB)       MHD8,9    #68. _     77. _      MHD8,9  88. __    __
 SM ODD        ____    MHD10,11  #69. _     78. _      MHD10,11 90. __    __
 AMA           ____    MHD12,13  #70. _     79. _      MHD12,13 92. __    __
 DISK ODD (KB) _____   MHD14     #71. _                MHD14   94. __
                        MHD15     #72. _                MHD15             __
```

```
SCREEN 5 OF 18                    5ESS Switch
ecdopt                     OFFICE DATA ADMINISTRATION
(5706)                            ECD OPTIONS

SWITCHING CONTROL CENTER                MAGNETIC TAPE DEVICES
#96. SCC 0 _                         #107. MT0     ____________________
 97. SCC 1 _                          108. MT1     ____________________
                                      109. MT1 SPU __

    SCAN POINT & SIGNAL                 MAINTENANCE TELETYPEWRITER
   DISTRIBUTOR CONTROLLER                 MCC BOARD TYPE        _____
     SCSDC0  _   #102. SCSDC45   _    #111. MTTY TYPE           _____________
#99. SCSDC1  _   #103. SCSDC67   _     112. COLORSCAN2 LINE COUNT __
#100. SCSDC2 _   #104. SCSDC89   _     113. ALT BOOT DSK         _
#101. SCSDC3 _   #105. SCSDC1011 _
                  106. SCSDC16   _       INPUT/OUTPUT PROCESSOR EQUIPAGE
                                     #114. IOP2 _
                                     #115. IOP3 _
```

```
SCREEN 6 OF 18                    5ESS Switch
ecdopt                     OFFICE DATA ADMINISTRATION
(5706)                            ECD OPTIONS

                           116. FLEXIBLE IOP SELECTION
   IOP/PC    DEVICE      DEVICE    LOGIN  AUTH  QTYOF   BAUD   TERM
   SLOT/P  CONTROLLER     TYPE   TERMINAL CHK   LINES   RATE   TYPE
 1. _____    _______    __________    _     _     __   _________  __
 2. _____    _______    __________    _     _     __   _________  __
 3. _____    _______    __________    _     _     __   _________  __
 4. _____    _______    __________    _     _     __   _________  __
 5. _____    _______    __________    _     _     __   _________  __
 6. _____    _______    __________    _     _     __   _________  __
 7. _____    _______    __________    _     _     __   _________  __
 8. _____    _______    __________    _     _     __   _________  __
 9. _____    _______    __________    _     _     __   _________  __
10. _____    _______    __________    _     _     __   _________  __
```

```
SCREEN 7 OF 18                    5ESS Switch
ecdopt                     OFFICE DATA ADMINISTRATION
(5706)                            ECD OPTIONS

                           116. FLEXIBLE IOP SELECTION
   IOP/PC    DEVICE      DEVICE    LOGIN  AUTH  QTYOF   BAUD    TERM
   SLOT/P  CONTROLLER     TYPE   TERMINAL CHK   LINES   RATE    TYPE
11. _____    _______    __________    _     _     __   _________  __
12. _____    _______    __________    _     _     __   _________  __
13. _____    _______    __________    _     _     __   _________  __
14. _____    _______    __________    _     _     __   _________  __
15. _____    _______    __________    _     _     __   _________  __
16. _____    _______    __________    _     _     __   _________  __
17. _____    _______    __________    _     _     __   _________  __
18. _____    _______    __________    _     _     __   _________  __
19. _____    _______    __________    _     _     __   _________  __
20. _____    _______    __________    _     _     __   _________  __
```

```
SCREEN 8 OF 18                    5ESS Switch
ecdopt                     OFFICE DATA ADMINISTRATION
(5706)                            ECD OPTIONS

                           116. FLEXIBLE IOP SELECTION
   IOP/PC    DEVICE      DEVICE    LOGIN  AUTH  QTYOF   BAUD    TERM
   SLOT/P  CONTROLLER     TYPE   TERMINAL CHK   LINES   RATE    TYPE
21. _____    _______    __________    _     _     __   _________  __
22. _____    _______    __________    _     _     __   _________  __
23. _____    _______    __________    _     _     __   _________  __
24. _____    _______    __________    _     _     __   _________  __
```

Copyright © 2006 Lucent Technologies

```
25. ____    ______    _________    _    _    __    ________    __
26. ____    ______    _________    _    _    __    ________    __
27. ____    ______    _________    _    _    __    ________    __
28. ____    ______    _________    _    _    __    ________    __
29. ____    ______    _________    _    _    __    ________    __
30. ____    ______    _________    _    _    __    ________    __
```

```
SCREEN 9 OF 18                    5ESS Switch
ecdopt                     OFFICE DATA ADMINISTRATION
(5706)                            ECD OPTIONS

                           116. FLEXIBLE IOP SELECTION
   IOP/PC    DEVICE      DEVICE    LOGIN  AUTH  QTYOF   BAUD    TERM
   SLOT/P  CONTROLLER     TYPE   TERMINAL CHK   LINES   RATE    TYPE
31. ____     ______    _________    _    _    __    ________    __
32. ____     ______    _________    _    _    __    ________    __
33. ____     ______    _________    _    _    __    ________    __
34. ____     ______    _________    _    _    __    ________    __
35. ____     ______    _________    _    _    __    ________    __
36. ____     ______    _________    _    _    __    ________    __
37. ____     ______    _________    _    _    __    ________    __
38. ____     ______    _________    _    _    __    ________    __
39. ____     ______    _________    _    _    __    ________    __
40. ____     ______    _________    _    _    __    ________    __
```

```
SCREEN 10 OF 18                   5ESS Switch
ecdopt                     OFFICE DATA ADMINISTRATION
(5706)                            ECD OPTIONS

                           116. FLEXIBLE IOP SELECTION
   IOP/PC    DEVICE      DEVICE    LOGIN  AUTH  QTYOF   BAUD    TERM
   SLOT/P  CONTROLLER     TYPE   TERMINAL CHK   LINES   RATE    TYPE
41. ____     ______    _________    _    _    __    ________    __
42. ____     ______    _________    _    _    __    ________    __
43. ____     ______    _________    _    _    __    ________    __
44. ____     ______    _________    _    _    __    ________    __
45. ____     ______    _________    _    _    __    ________    __
46. ____     ______    _________    _    _    __    ________    __
47. ____     ______    _________    _    _    __    ________    __
48. ____     ______    _________    _    _    __    ________    __
49. ____     ______    _________    _    _    __    ________    __
50. ____     ______    _________    _    _    __    ________    __
```

```
SCREEN 11 OF 18                   5ESS Switch
ecdopt                     OFFICE DATA ADMINISTRATION
(5706)                            ECD OPTIONS
```

```
                          116. FLEXIBLE IOP SELECTION
   IOP/PC    DEVICE      DEVICE    LOGIN  AUTH  QTYOF   BAUD    TERM
   SLOT/P  CONTROLLER     TYPE   TERMINAL CHK   LINES   RATE    TYPE
51. ____     _______   __________    _     _     __   _________  __
52. ____     _______   __________    _     _     __   _________  __
53. ____     _______   __________    _     _     __   _________  __
54. ____     _______   __________    _     _     __   _________  __
55. ____     _______   __________    _     _     __   _________  __
56. ____     _______   __________    _     _     __   _________  __
57. ____     _______   __________    _     _     __   _________  __
58. ____     _______   __________    _     _     __   _________  __
59. ____     _______   __________    _     _     __   _________  __
```

```
SCREEN 12 OF 18                  5ESS Switch
ecdopt                     OFFICE DATA ADMINISTRATION
(5706)                           ECD OPTIONS

                          171. VIRTUAL IOP SELECTION
             VIRTUAL    VIRTUAL
   VIOP/PC   DEVICE      DEVICE
   SLOT/P  CONTROLLER     TYPE
 1. ____     ________   __________
 2. ____     ________   __________
 3. ____     ________   __________
 4. ____     ________   __________
 5. ____     ________   __________
 6. ____     ________   __________
 7. ____     ________   __________
 8. ____     ________   __________
 9. ____     ________   __________
10. ____     ________   __________
```

```
SCREEN 13 OF 18                  5ESS Switch
ecdopt                     OFFICE DATA ADMINISTRATION
(5706)                           ECD OPTIONS

                          171. VIRTUAL IOP SELECTION
             VIRTUAL    VIRTUAL
   VIOP/PC   DEVICE      DEVICE
   SLOT/P  CONTROLLER     TYPE
 11.____     ________   __________
 12.____     ________   __________
 13.____     ________   __________
 14.____     ________   __________
 15.____     ________   __________
 16.____     ________   __________
 17.____     ________   __________
 18.____     ________   __________
```

Copyright © 2006 Lucent Technologies

```
 19.____     ________   __________
 20.____     ________   __________
```

```
SCREEN 14 OF 18                  5ESS Switch
ecdopt                     OFFICE DATA ADMINISTRATION
(5706)                           ECD OPTIONS

                           171. VIRTUAL IOP SELECTION
             VIRTUAL    VIRTUAL
   VIOP/PC   DEVICE      DEVICE
   SLOT/P  CONTROLLER     TYPE
 21.____     ________   __________
 22.____     ________   __________
 23.____     ________   __________
 24.____     ________   __________
 25.____     ________   __________
 26.____     ________   __________
 27.____     ________   __________
 28.____     ________   __________
 29.____     ________   __________
 30.____     ________   __________
```

```
SCREEN 15 OF 18                  5ESS Switch
ecdopt                     OFFICE DATA ADMINISTRATION
(5706)                           ECD OPTIONS

                           171. VIRTUAL IOP SELECTION
             VIRTUAL    VIRTUAL
   VIOP/PC   DEVICE      DEVICE
   SLOT/P  CONTROLLER     TYPE
 31.____     ________   __________
 32.____     ________   __________
 33.____     ________   __________
 34.____     ________   __________
 35.____     ________   __________
 36.____     ________   __________
 37.____     ________   __________
 38.____     ________   __________
 39.____     ________   __________
 40.____     ________   __________
```

```
SCREEN 16 OF 18                  5ESS Switch
ecdopt                     OFFICE DATA ADMINISTRATION
(5706)                           ECD OPTIONS

                           171. VIRTUAL IOP SELECTION
             VIRTUAL    VIRTUAL
```

```
   VIOP/PC   DEVICE      DEVICE
   SLOT/P  CONTROLLER     TYPE
 41.____     ________   __________
 42.____     ________   __________
 43.____     ________   __________
 44.____     ________   __________
 45.____     ________   __________
 46.____     ________   __________
 47.____     ________   __________
 48.____     ________   __________
 49.____     ________   __________
 50.____     ________   __________
```

```
SCREEN 17 OF 18                  5ESS Switch
ecdopt                     OFFICE DATA ADMINISTRATION
(5706)                           ECD OPTIONS

                           171. VIRTUAL IOP SELECTION
             VIRTUAL    VIRTUAL
   VIOP/PC   DEVICE
   SLOT/P  CONTROLLER     TYPE
 51.____     ________   __________
 52.____     ________   __________
 53.____     ________   __________
 54.____     ________   __________
 55.____     ________   __________
 56.____     ________   __________
 57.____     ________   __________
 58.____     ________   __________
 59.____     ________   __________
 60.____     ________   __________
```

```
SCREEN 18 OF 18                  5ESS Switch
ecdopt                     OFFICE DATA ADMINISTRATION
(5706)                           ECD OPTIONS

                           171. VIRTUAL IOP SELECTION
             VIRTUAL    VIRTUAL
   VIOP/PC   DEVICE      DEVICE
   SLOT/P  CONTROLLER     TYPE
 61.____     ________   __________
 62.____     ________   __________
 63.____     ________   __________
 64.____     ________   __________
```

Figure 2 SAMPLE ECDOPT FORM 5E14 SOFTWARE RELEASE

```
SCREEN 1 OF 18                    5ESS Switch
ecdopt                     OFFICE DATA ADMINISTRATION
(5706)                            ECD OPTIONS

*1. KEY                     0
#2. AT&T LONG DISTANCE      Y              12. AUTO PWR RCVY         N
#3. TIME ZONE               -5                 PROCESSOR MEMORY TYPE KLW
#4. VCDX                    N                  PROCESSOR MEMORY SIZE 128
#5. DRM                     N             #15. UTIL CKT              Y
#6. ADDL SERIAL PORTS       N                  AM ODD MEMORY SIZE    10240
 7. AIR EXTENSION           N                  DISK DRIVE TYPE       SCSI2GB
 8. CM TYPE                 CM3
#9. IOMI BOARDS             _
 10. QGWP                   N
#11. PROCESSOR MODEL        3B21D
```

```
SCREEN 2 OF 18                    5ESS Switch
ecdopt                     OFFICE DATA ADMINISTRATION
(5706)                            ECD OPTIONS

                              CNI EQUIPAGE

                                                                 LINK NODE
#18. RPCN000,320 N                                  LINK     EQUIP     USAGE
                                                27. LN018,338   N     35. _______
                        LINK NODE               28. LN017,337   N     36. _______
     LINK      EQUIP     USAGE                  29. LN016,336   N     37. _______
#19. LN004,324   N    23. _______              30. LN015,335   N     38. _______
 20. LN003,323   N    24  _______              31. LN014,334   N     39. _______
 21. LN002,322   N    25. _______              32. LN013,333   N     40. _______
 22. LN001,321   N    26. _______              33. LN012,332   N     41. _______
                                                34. LN011,331   N     42. _______
```

```
SCREEN 3 OF 18                    5ESS SWITCH
ecdopt                     OFFICE DATA ADMINISTRATION
(5706)                            ECD OPTIONS

          CNI EQUIPAGE                          TCP/IP DATALINK SELECTION

                        LINK NODE              59. TRFM RNM OPT  NONE
    LINK      EQUIP      USAGE
43. LN028,348   N     51. _______
44. LN027,347   N     52. _______
45. LN026,346   N     53. _______
46. LN025,345   N     54. _______
47. LN024,344   N     55. _______
48. LN023,343   N     56. _______
49. LN022,342   N     57. _______
```

Copyright © 2006 Lucent Technologies

```
50. LN021,341   N     58. _______
```

```
SCREEN 4 OF 18                    5ESS Switch
ecdopt                     OFFICE DATA ADMINISTRATION
(5706)                            ECD OPTIONS

                                          MOVING  HEAD  DISKS
 60. CLLI ____________                                          EVEN  ODD
                        DISK   EQUIPAGE  PCT SMODD/AMA  DISK     SPU   SPU
                       MHD0,1         Y         R      MHD0,1     00    01
 DISK CONFIG 21        MHD2,3         Y         R      MHD2,3     02    03
                       MHD4,5    #67. N     76. _      MHD4,5  85. __   __
                       MHD6,7    #68. N     77. _      MHD6,7  87. __   __
  TOTAL SIZE (MB)      MHD8,9    #69. N     78. _      MHD8,9  89. __   __
 SM ODD        _____  MHD10,11  #70. N     79. _      MHD10,11 91. __   __
 AMA           _____  MHD12,13  #71. N     80. _      MHD12,13 93. __   __
 DISK ODD (KB) ______ MHD14     #72. Y                MHD14   95. __
                      MHD15     #73. Y                MHD15            __
```

```
SCREEN 5 OF 18                    5ESS Switch
ecdopt                     OFFICE DATA ADMINISTRATION
(5706)                            ECD OPTIONS

SWITCHING CONTROL CENTER                MAGNETIC TAPE DEVICES
 #97. SCC 0 Y                         #108. MT0     SCSI9TRK
  98. SCC 1 Y                          109. MT1     ____________________
                                       110. MT1 SPU __

    SCAN POINT & SIGNAL                 MAINTENANCE TELETYPEWRITER
   DISTRIBUTOR CONTROLLER                 MCC BOARD TYPE         UN597
 #99. SCSDC0 Y   #103. SCSDC45   N   #112. MTTY TYPE             ATT/260C
 #100. SCSDC1Y   #104. SCSDC67   Y    113. COLORSCAN2 LINE COUNT __
#101. SCSDC2 Y   #105. SCSDC89   Y    114. ALT BOOT DSK          N
#102. SCSDC3 Y   #106. SCSDC1011 Y
                  107. SCSDC16   N      INPUT/OUTPUT PROCESSOR EQUIPAGE
                                      #115. IOP2 N
                                      #116. IOP3 N
```

```
SCREEN 6 OF 18                    5ESS Switch
ecdopt                     OFFICE DATA ADMINISTRATION
(5706)                            ECD OPTIONS

                           117. FLEXIBLE IOP SELECTION
   IOP/PC    DEVICE      DEVICE    LOGIN  AUTH  QTYOF   BAUD   TERM
   SLOT/P  CONTROLLER     TYPE   TERMINAL CHK   LINES   RATE   TYPE
 1. ____     ______    __________     _     _     __   ________  __
 2. ____     ______    __________     _     _     __   ________  __
```

```
 3. ____     ______    _________     _     _     __   ________  __
 4. ____     ______    _________     _     _     __   ________  __
 5. ____     ______    _________     _     _     __   ________  __
 6. ____     ______    _________     _     _     __   ________  __
 7. ____     ______    _________     _     _     __   ________  __
 8. ____     ______    _________     _     _     __   ________  __
 9. ____     ______    _________     _     _     __   ________  __
10. ____     ______    _________     _     _     __   ________  __
```

```
SCREEN 7 OF 18                    5ESS Switch
ecdopt                     OFFICE DATA ADMINISTRATION
(5706)                            ECD OPTIONS

                           117. FLEXIBLE IOP SELECTION
   IOP/PC    DEVICE      DEVICE    LOGIN  AUTH  QTYOF   BAUD    TERM
   SLOT/P  CONTROLLER     TYPE   TERMINAL CHK   LINES   RATE    TYPE
11. ____     ______    _________     _     _     __   ________  __
12. ____     ______    _________     _     _     __   ________  __
13. ____     ______    _________     _     _     __   ________  __
14. ____     ______    _________     _     _     __   ________  __
15. ____     ______    _________     _     _     __   ________  __
16. ____     ______    _________     _     _     __   ________  __
17. ____     ______    _________     _     _     __   ________  __
18. ____     ______    _________     _     _     __   ________  __
19. ____     ______    _________     _     _     __   ________  __
20. ____     ______    _________     _     _     __   ________  __
```

```
SCREEN 8 OF 18                    5ESS Switch
ecdopt                     OFFICE DATA ADMINISTRATION
(5706)                            ECD OPTIONS

                           117. FLEXIBLE IOP SELECTION
   IOP/PC    DEVICE      DEVICE    LOGIN  AUTH  QTYOF   BAUD    TERM
   SLOT/P  CONTROLLER     TYPE   TERMINAL CHK   LINES   RATE    TYPE
21. ____     ______    _________     _     _     __   ________  __
22. ____     ______    _________     _     _     __   ________  __
23. ____     ______    _________     _     _     __   ________  __
24. ____     ______    _________     _     _     __   ________  __
25. ____     ______    _________     _     _     __   ________  __
26. ____     ______    _________     _     _     __   ________  __
27. ____     ______    _________     _     _     __   ________  __
28. ____     ______    _________     _     _     __   ________  __
29. ____     ______    _________     _     _     __   ________  __
30. ____     ______    _________     _     _     __   ________  __
```

```
SCREEN 9 OF 18                    5ESS Switch
ecdopt                     OFFICE DATA ADMINISTRATION
```

```
(5706)                          ECD OPTIONS

                        117. FLEXIBLE IOP SELECTION
   IOP/PC    DEVICE      DEVICE    LOGIN  AUTH  QTYOF   BAUD    TERM
   SLOT/P  CONTROLLER     TYPE   TERMINAL CHK   LINES   RATE    TYPE
31. ____     ______    _________     _     _     __   ________   __
32. ____     ______    _________     _     _     __   ________   __
33. ____     ______    _________     _     _     __   ________   __
34. ____     ______    _________     _     _     __   ________   __
35. ____     ______    _________     _     _     __   ________   __
36. ____     ______    _________     _     _     __   ________   __
37. ____     ______    _________     _     _     __   ________   __
38. ____     ______    _________     _     _     __   ________   __
39. ____     ______    _________     _     _     __   ________   __
40. ____     ______    _________     _     _     __   ________   __
```

```
SCREEN 10 OF 18                 5ESS Switch
ecdopt                    OFFICE DATA ADMINISTRATION
(5706)                          ECD OPTIONS

                        117. FLEXIBLE IOP SELECTION
   IOP/PC    DEVICE      DEVICE    LOGIN  AUTH  QTYOF   BAUD    TERM
   SLOT/P  CONTROLLER     TYPE   TERMINAL CHK   LINES   RATE    TYPE
41. ____     ______    _________     _     _     __   ________   __
42. ____     ______    _________     _     _     __   ________   __
43. ____     ______    _________     _     _     __   ________   __
44. ____     ______    _________     _     _     __   ________   __
45. ____     ______    _________     _     _     __   ________   __
46. ____     ______    _________     _     _     __   ________   __
47. ____     ______    _________     _     _     __   ________   __
48. ____     ______    _________     _     _     __   ________   __
49. ____     ______    _________     _     _     __   ________   __
50. ____     ______    _________     _     _     __   ________   __
```

```
SCREEN 11 OF 18                 5ESS Switch
ecdopt                    OFFICE DATA ADMINISTRATION
(5706)                          ECD OPTIONS

                        117. FLEXIBLE IOP SELECTION
   IOP/PC    DEVICE      DEVICE    LOGIN  AUTH  QTYOF   BAUD    TERM
   SLOT/P  CONTROLLER     TYPE   TERMINAL CHK   LINES   RATE    TYPE
51. ____     ______    _________     _     _     __   ________   __
52. ____     ______    _________     _     _     __   ________   __
53. ____     ______    _________     _     _     __   ________   __
54. ____     ______    _________     _     _     __   ________   __
55. ____     ______    _________     _     _     __   ________   __
56. ____     ______    _________     _     _     __   ________   __
57. ____     ______    _________     _     _     __   ________   __
```

```
58. ____     _______    __________     _     _     __   _________   __
59. ____     _______    __________     _     _     __   _________   __
```

```
SCREEN 12 OF 18                  5ESS Switch
ecdopt                     OFFICE DATA ADMINISTRATION
(5706)                           ECD OPTIONS

                           172. VIRTUAL IOP SELECTION
             VIRTUAL    VIRTUAL
   VIOP/PC   DEVICE      DEVICE
   SLOT/P  CONTROLLER     TYPE
 1. ____     ________   ___________
 2. ____     ________   ___________
 3. ____     ________   ___________
 4. ____     ________   ___________
 5. ____     ________   ___________
 6. ____     ________   ___________
 7. ____     ________   ___________
 8. ____     ________   ___________
 9. ____     ________   ___________
10. ____     ________   ___________
```

```
SCREEN 13 OF 18                  5ESS Switch
ecdopt                     OFFICE DATA ADMINISTRATION
(5706)                           ECD OPTIONS

                           172. VIRTUAL IOP SELECTION
             VIRTUAL    VIRTUAL
   VIOP/PC   DEVICE      DEVICE
   SLOT/P  CONTROLLER     TYPE
11. ____     ________   ___________
12. ____     ________   ___________
13. ____     ________   ___________
14. ____     ________   ___________
15. ____     ________   ___________
16. ____     ________   ___________
17. ____     ________   ___________
18. ____     ________   ___________
19. ____     ________   ___________
20. ____     ________   ___________
```

```
SCREEN 14 OF 18                  5ESS Switch
ecdopt                     OFFICE DATA ADMINISTRATION
(5706)                           ECD OPTIONS

                           172. VIRTUAL IOP SELECTION
             VIRTUAL    VIRTUAL
```

```
   VIOP/PC   DEVICE      DEVICE
   SLOT/P  CONTROLLER     TYPE
21. ____     _______   __________
22. ____     _______   __________
23. ____     _______   __________
24. ____     _______   __________
25. ____     _______   __________
26. ____     _______   __________
27. ____     _______   __________
28. ____     _______   __________
29. ____     _______   __________
30. ____     _______   __________
```

```
SCREEN 15 OF 18                  5ESS Switch
ecdopt                     OFFICE DATA ADMINISTRATION
(5706)                           ECD OPTIONS

                           172. VIRTUAL IOP SELECTION
             VIRTUAL    VIRTUAL
   VIOP/PC   DEVICE      DEVICE
   SLOT/P  CONTROLLER     TYPE
31. ____     _______   __________
32. ____     _______   __________
33. ____     _______   __________
34. ____     _______   __________
35. ____     _______   __________
36. ____     _______   __________
37. ____     _______   __________
38. ____     _______   __________
39. ____     _______   __________
40. ____     _______   __________
```

```
SCREEN 16 OF 18                  5ESS Switch
ecdopt                     OFFICE DATA ADMINISTRATION
(5706)                           ECD OPTIONS

                           172. VIRTUAL IOP SELECTION
             VIRTUAL    VIRTUAL
   VIOP/PC   DEVICE      DEVICE
   SLOT/P  CONTROLLER     TYPE
41. ____     _______   __________
42. ____     _______   __________
43. ____     _______   __________
44. ____     _______   __________
45. ____     _______   __________
46. ____     _______   __________
47. ____     _______   __________
48. ____     _______   __________
```

Copyright © 2006 Lucent Technologies

```
49. ____     _______   __________
50. ____     _______   __________
```

```
SCREEN 17 OF 18                  5ESS Switch
ecdopt                     OFFICE DATA ADMINISTRATION
(5706)                           ECD OPTIONS

                           172. VIRTUAL IOP SELECTION
             VIRTUAL    VIRTUAL
   VIOP/PC   DEVICE      DEVICE
   SLOT/P  CONTROLLER     TYPE
51. ____     _______   __________
52. ____     _______   __________
53. ____     _______   __________
54. ____     _______   __________
55. ____     _______   __________
56. ____     _______   __________
57. ____     _______   __________
58. ____     _______   __________
59. ____     _______   __________
60. ____     _______   __________
```

```
SCREEN 18 OF 18                  5ESS Switch
ecdopt                     OFFICE DATA ADMINISTRATION
(5706)                           ECD OPTIONS

                           172. VIRTUAL IOP SELECTION
             VIRTUAL    VIRTUAL
   VIOP/PC   DEVICE      DEVICE
   SLOT/P  CONTROLLER     TYPE
61. ____     _______   __________
62. ____     _______   __________
63. ____     _______   __________
64. ____     _______   __________
```

Figure 3 SAMPLE ECDOPT FORM 5E15 SOFTWARE RELEASE

```
SCREEN 1 OF 18                   5ESS Switch

ecdopt                     OFFICE DATA ADMINISTRATION

(5706)                           ECD OPTIONS



*1. KEY                     0
```

```
#2. AT&T LONG DISTANCE     Y              12. AUTO PWR RCVY         N

#3. TIME ZONE              -5                 PROCESSOR MEMORY TYPE KLW

#4. VCDX                   N                  PROCESSOR MEMORY SIZE 128

#5. DRM                    N             #15. UTIL CKT              Y

#6. ADDL SERIAL PORTS      N                  AM ODD MEMORY SIZE    10240

 7. AIR EXTENSION          N                  DISK DRIVE TYPE       SCSI2GB

 8. CM TYPE                CM3

 9. IOMI BOARDS            1

 10. QGWP                  N

#11. PROCESSOR MODEL       3B21D
```

```
SCREEN 2 OF 18                    5ESS Switch

ecdopt                     OFFICE DATA ADMINISTRATION

(5706)                            ECD OPTIONS


                              CNI EQUIPAGE


                                                                LINK NODE

#18. RPCN000,320 N                             LINK     EQUIP     USAGE
```

```
                                        27. LN018,338   N     35. _______
                      LINK NODE         28. LN017,337   N     36. _______
     LINK      EQUIP     USAGE          29. LN016,336   N     37. _______
#19. LN004,324   N    23. _______       30. LN015,335   N     38. _______
 20. LN003,323   N    24  _______       31. LN014,334   N     39. _______
 21. LN002,322   N    25. _______       32. LN013,333   N     40. _______
 22. LN001,321   N    26. _______       33. LN012,332   N     41. _______
                                        34. LN011,331   N     42. _______
```

```
SCREEN 3 OF 18                    5ESS SWITCH
ecdopt                     OFFICE DATA ADMINISTRATION
(5706)                            ECD OPTIONS

          CNI EQUIPAGE                          TCP/IP DATALINK SELECTION

                      LINK NODE              59. TRFM RNM OPT  NONE
    LINK      EQUIP     USAGE
43. LN028,348   N     51. _______
44. LN027,347   N     52. _______
45. LN026,346   N     53. _______
```

46. LN025,345 N 54. _____

47. LN024,344 N 55. _____

48. LN023,343 N 56. _____

49. LN022,342 N 57. _____

50. LN021,341 N 58. _____

SCREEN 4 OF 18 5ESS Switch

ecdopt OFFICE DATA ADMINISTRATION

(5706) ECD OPTIONS

MOVING HEAD DISKS

60. CLLI _____ EVEN ODD

	DISK	EQUIPAGE	PCT	SMODD/AMA	DISK	SPU	SPU
	MHD0,1	Y		R	MHD0,1	00	01
DISK CONFIG 22	MHD2,3	Y		R	MHD2,3	02	03
	MHD4,5	#67. N	76.	_	MHD4,5	85. __	__
	MHD6,7	#68. N	77.	_	MHD6,7	87. __	__
TOTAL SIZE (MB)	MHD8,9	#69. N	78.	_	MHD8,9	89. __	__
SM ODD ____	MHD10,11	#70. N	79.	_	MHD10,11	91. __	__
AMA ____	MHD12,13	#71. N	80.	_	MHD12,13	93. __	__
DISK ODD (KB) _____	MHD14	#72. _			MHD14	95. __	

```
                    MHD15     #73. _                MHD15              __
```

```
SCREEN 5 OF 18                    5ESS Switch

ecdopt                     OFFICE DATA ADMINISTRATION

(5706)                            ECD OPTIONS


SWITCHING CONTROL CENTER                MAGNETIC TAPE DEVICES

 #97. SCC 0 Y                         #108. MT0     SCSI9TRK

  98. SCC 1 Y                          109. MT1     ____________________

                                       110. MT1 SPU __


    SCAN POINT & SIGNAL                 MAINTENANCE TELETYPEWRITER

   DISTRIBUTOR CONTROLLER                 MCC BOARD TYPE         UN597

 #99. SCSDC0 Y   #103. SCSDC45   N    #112. MTTY TYPE            ATT/260C

#100. SCSDC1 Y   #104. SCSDC67   _     113. COLORSCAN2 LINE COUNT __

#101. SCSDC2 Y   #105. SCSDC89   Y     114. ALT BOOT DSK          N

#102. SCSDC3 Y   #106. SCSDC1011 N

                  107. SCSDC16   N      INPUT/OUTPUT PROCESSOR EQUIPAGE

                                      #115. IOP2 N
```

#116. IOP3 N

SCREEN 6 OF 18 5ESS Switch

ecdopt OFFICE DATA ADMINISTRATION

(5706) ECD OPTIONS

117. FLEXIBLE IOP SELECTION

	IOP/PC SLOT/P	DEVICE CONTROLLER	DEVICE TYPE	LOGIN TERMINAL	AUTH CHK	QTYOF LINES	BAUD RATE	TERM TYPE
1.	____	_____	_____	_	_	__	_____	__
2.	____	_____	_____	_	_	__	_____	__
3.	____	_____	_____	_	_	__	_____	__
4.	____	_____	_____	_	_	__	_____	__
5.	____	_____	_____	_	_	__	_____	__
6.	____	_____	_____	_	_	__	_____	__
7.	____	_____	_____	_	_	__	_____	__
8.	____	_____	_____	_	_	__	_____	__
9.	____	_____	_____	_	_	__	_____	__
10.	____	_____	_____	_	_	__	_____	__

Copyright © 2006 Lucent Technologies

SCREEN 7 OF 18 5ESS Switch

ecdopt OFFICE DATA ADMINISTRATION

(5706) ECD OPTIONS

117. FLEXIBLE IOP SELECTION

	IOP/PC SLOT/P	DEVICE CONTROLLER	DEVICE TYPE	LOGIN TERMINAL	AUTH CHK	QTYOF LINES	BAUD RATE	TERM TYPE
11.	____	_____	_____	_	_	__	_____	__
12.	____	_____	_____	_	_	__	_____	__
13.	____	_____	_____	_	_	__	_____	__
14.	____	_____	_____	_	_	__	_____	__
15.	____	_____	_____	_	_	__	_____	__
16.	____	_____	_____	_	_	__	_____	__
17.	____	_____	_____	_	_	__	_____	__
18.	____	_____	_____	_	_	__	_____	__
19.	____	_____	_____	_	_	__	_____	__
20.	____	_____	_____	_	_	__	_____	__

Copyright © 2006 Lucent Technologies

```
SCREEN 8 OF 18                    5ESS Switch

ecdopt                     OFFICE DATA ADMINISTRATION

(5706)                            ECD OPTIONS


                           117. FLEXIBLE IOP SELECTION

   IOP/PC    DEVICE      DEVICE    LOGIN  AUTH  QTYOF   BAUD    TERM

   SLOT/P  CONTROLLER     TYPE   TERMINAL CHK   LINES   RATE    TYPE

21. ____    ______     _________     _     _     __   ________   __

22. ____    ______     _________     _     _     __   ________   __

23. ____    ______     _________     _     _     __   ________   __

24. ____    ______     _________     _     _     __   ________   __

25. ____    ______     _________     _     _     __   ________   __

26. ____    ______     _________     _     _     __   ________   __

27. ____    ______     _________     _     _     __   ________   __

28. ____    ______     _________     _     _     __   ________   __

29. ____    ______     _________     _     _     __   ________   __

30. ____    ______     _________     _     _     __   ________   __
```

```
SCREEN 9 OF 18                    5ESS Switch

ecdopt                     OFFICE DATA ADMINISTRATION
```

(5706) ECD OPTIONS

117. FLEXIBLE IOP SELECTION

	IOP/PC SLOT/P	DEVICE CONTROLLER	DEVICE TYPE	LOGIN TERMINAL	AUTH CHK	QTYOF LINES	BAUD RATE	TERM TYPE
31.	____	_____	_____	_	_	__	_____	__
32.	____	_____	_____	_	_	__	_____	__
33.	____	_____	_____	_	_	__	_____	__
34.	____	_____	_____	_	_	__	_____	__
35.	____	_____	_____	_	_	__	_____	__
36.	____	_____	_____	_	_	__	_____	__
37.	____	_____	_____	_	_	__	_____	__
38.	____	_____	_____	_	_	__	_____	__
39.	____	_____	_____	_	_	__	_____	__
40.	____	_____	_____	_	_	__	_____	__

SCREEN 10 OF 18 5ESS Switch

ecdopt OFFICE DATA ADMINISTRATION

(5706) ECD OPTIONS

117. FLEXIBLE IOP SELECTION

	IOP/PC SLOT/P	DEVICE CONTROLLER	DEVICE TYPE	LOGIN TERMINAL	AUTH CHK	QTYOF LINES	BAUD RATE	TERM TYPE
41.	____	_____	_____	_	_	__	_____	__
42.	____	_____	_____	_	_	__	_____	__
43.	____	_____	_____	_	_	__	_____	__
44.	____	_____	_____	_	_	__	_____	__
45.	____	_____	_____	_	_	__	_____	__
46.	____	_____	_____	_	_	__	_____	__
47.	____	_____	_____	_	_	__	_____	__
48.	____	_____	_____	_	_	__	_____	__
49.	____	_____	_____	_	_	__	_____	__
50.	____	_____	_____	_	_	__	_____	__

SCREEN 11 OF 18 5ESS Switch

ecdopt OFFICE DATA ADMINISTRATION

(5706) ECD OPTIONS

117. FLEXIBLE IOP SELECTION

	IOP/PC SLOT/P	DEVICE CONTROLLER	DEVICE TYPE	LOGIN TERMINAL	AUTH CHK	QTYOF LINES	BAUD RATE	TERM TYPE
51.	____	_____	_____	_	_	__	_____	__

Copyright © 2006 Lucent Technologies

52. ____ _____ _____ _ _ __ _____ __

53. ____ _____ _____ _ _ __ _____ __

54. ____ _____ _____ _ _ __ _____ __

55. ____ _____ _____ _ _ __ _____ __

56. ____ _____ _____ _ _ __ _____ __

57. ____ _____ _____ _ _ __ _____ __

58. ____ _____ _____ _ _ __ _____ __

59. ____ _____ _____ _ _ __ _____ __

SCREEN 12 OF 18 5ESS Switch

ecdopt OFFICE DATA ADMINISTRATION

(5706) ECD OPTIONS

172. VIRTUAL IOP SELECTION

	VIRTUAL	VIRTUAL
VIOP/PC	DEVICE	DEVICE
SLOT/P	CONTROLLER	TYPE
1. ____	_____	_____
2. ____	_____	_____

3. _____ _____ _____

4. _____ _____ _____

5. _____ _____ _____

6. _____ _____ _____

7. _____ _____ _____

8. _____ _____ _____

9. _____ _____ _____

10. _____ _____ _____

SCREEN 13 OF 18 5ESS Switch

ecdopt OFFICE DATA ADMINISTRATION

(5706) ECD OPTIONS

172. VIRTUAL IOP SELECTION

	VIOP/PC SLOT/P	VIRTUAL DEVICE CONTROLLER	VIRTUAL DEVICE TYPE
11.	_____	_____	_____
12.	_____	_____	_____
13.	_____	_____	_____
14.	_____	_____	_____
15.	_____	_____	_____

Copyright © 2006 Lucent Technologies

16. ____ _____ _____

17. ____ _____ _____

18. ____ _____ _____

19. ____ _____ _____

20. ____ _____ _____

SCREEN 14 OF 18 5ESS Switch

ecdopt OFFICE DATA ADMINISTRATION

(5706) ECD OPTIONS

172. VIRTUAL IOP SELECTION

VIOP/PC SLOT/P	VIRTUAL DEVICE CONTROLLER	VIRTUAL DEVICE TYPE
21. ____	_____	_____
22. ____	_____	_____
23. ____	_____	_____
24. ____	_____	_____
25. ____	_____	_____
26. ____	_____	_____
27. ____	_____	_____

Copyright © 2006 Lucent Technologies

28. ____ _____ _____

29. ____ _____ _____

30. ____ _____ _____

SCREEN 15 OF 18 5ESS Switch

ecdopt OFFICE DATA ADMINISTRATION

(5706) ECD OPTIONS

172. VIRTUAL IOP SELECTION

VIOP/PC SLOT/P	VIRTUAL DEVICE CONTROLLER	VIRTUAL DEVICE TYPE
31. ____	_____	_____
32. ____	_____	_____
33. ____	_____	_____
34. ____	_____	_____
35. ____	_____	_____
36. ____	_____	_____
37. ____	_____	_____
38. ____	_____	_____
39. ____	_____	_____
40. ____	_____	_____

Copyright © 2006 Lucent Technologies

```
SCREEN 16 OF 18                    5ESS Switch

ecdopt                       OFFICE DATA ADMINISTRATION

(5706)                             ECD OPTIONS


                             172. VIRTUAL IOP SELECTION

             VIRTUAL    VIRTUAL

   VIOP/PC   DEVICE      DEVICE

   SLOT/P  CONTROLLER     TYPE

41. ____     _______   __________

42. ____     _______   __________

43. ____     _______   __________

44. ____     _______   __________

45. ____     _______   __________

46. ____     _______   __________

47. ____     _______   __________

48. ____     _______   __________

49. ____     _______   __________

50. ____     _______   __________
```

Copyright © 2006 Lucent Technologies

```
SCREEN 17 OF 18                    5ESS Switch

ecdopt                       OFFICE DATA ADMINISTRATION

(5706)                             ECD OPTIONS


                             172. VIRTUAL IOP SELECTION

             VIRTUAL    VIRTUAL

   VIOP/PC   DEVICE      DEVICE

   SLOT/P  CONTROLLER     TYPE

51. ____     _______   __________

52. ____     _______   __________

53. ____     _______   __________

54. ____     _______   __________

55. ____     _______   __________

56. ____     _______   __________

57. ____     _______   __________

58. ____     _______   __________

59. ____     _______   __________

60. ____     _______   __________
```

Copyright © 2006 Lucent Technologies

```
SCREEN 18 OF 18                    5ESS Switch            _

ecdopt                      OFFICE DATA ADMINISTRATION

(5706)                             ECD OPTIONS


                            172. VIRTUAL IOP SELECTION

             VIRTUAL    VIRTUAL

   VIOP/PC   DEVICE      DEVICE

   SLOT/P  CONTROLLER     TYPE

61. ____     _______   __________

62. ____     _______   __________

63. ____     _______   __________

64. ____     _______   __________
```

Figure 4 SAMPLE ECDOPT FORM 5E16 AND LATER SOFTWARE RELEASES

Copyright © 2006 Lucent Technologies

SEC. 9: 5710 RECORD
LINE UNIT EQUIPAGE FORM - EQLU

1. GENERAL

The 5710 Record is available with 5E2 and later Software Releases. It is used to define SM (Switching Module) and LU (Line Unit) assignments in a 5ESS Switch.

1.1 Recent Change View

The Recent Change View for this form is 19.1.

2. FORM AND RECORD ENTRIES

2.1 BASE AND CONTROL, ESS UNIT

Enter the Base and Control Number and the Office Name on each record.

2.2 *SWITCHING MODULE

Description: Enter the Switching Module Number.

Required Field.
Valid Entries: 1 - 192

Data Rules:

Each value entered in this field on the EQLU or EQLUP forms must have a corresponding EQIM form with the same SM value where the value entered for CONFIGURATION supports Line Units.

2.3 *LINE UNIT

Description: Enter the Line Unit Number.

NOTE: For 5E9(2) and later, 0 - 7 is used for SMs;
0 - 42 is used for SM-2000.

Required Field.
Valid Entries:
5E9(1) and earlier: 0 - 7
5E9(2) and later: 0 - 42

Data Rules:

If LINE UNIT is greater than 7, LINE UNIT TYPE must be "4AC1" (Model 2), or "4AD1" (Model 3).

Line Units share the same unit number range with (R)ISLUs and IDCUs. Therefore, unit numbers assigned on this form may not be assigned on any EQISLU, EQRISLU, or EQIDCU form with the same SM number.

2.4 #EQUIPMENT STATUS

Description: Enter the status of the equipment. For new offices and units destined for factory testing,

Copyright © 2006 Lucent Technologies

operational is the only allowed value. During offline ODA database retrofits, the other values are valid.

Required Field.

Valid EQUIPMENT STATUS Entries	
Entry	**Definition**
O	Operational.
G	Growth.
U	Unequipped.

Data Rules:

For 5E9(2) and later, the EQSTAT on a matching EQDI form (where DATA GROUP on this form is defined as DI on the EQDI form) must be greater than or equal to the EQUIPMENT STATUS value on this form (i.e., "O" is greater than "G" which is greater than "U").

2.5 #LINE UNIT TYPE

Description: Enter the Line Unit Type. The Line Unit Type corresponds to the last four characters of the J-Drawing identifying number.

Required Field.

Valid LINE UNIT TYPE Entries	
Entry	**Description**
4AB1	2-Shelf Model 1 Line Unit.
4AC1 or 4AC2	2-Shelf Model 2 Line Unit.
4AD1	2-Shelf Model 3 Line Unit. Provides a 10:1 concentration ratio.

Data Rules:

For 5E9(2) and later, if UNIT TYPE on the EQIM form (5700 Record) is "SM2000", LINE UNIT TYPE must be "4AD1".

2.6 #EQUIPMENT BAY

Description: Enter the Equipment Location Bay Number.

Required Field.
Valid Entries:

Valid EQUIPMENT BAY Entries, 5E9(2) - 5E16(1)	
Entry	**Definition**
0 - 4	Switching Module (non-SM-2000).
0 - 14	SM-2000; SM Cabinent aisle.
100 - 104	SM-2000; Back panel; wiring position.
200 - 208	SM-2000; Front panel; door position.

Valid EQUIPMENT BAY Entries for 5E16(2) and later			
Entry			**Type**
000 - 004			SM
000 - 014,	100 - 104,	200 - 208,	SM-2000
A00 - A14,	B00 - B04,	C00 - C08,	
D00 - D14,	E00 - E04,	F00 - F08,	
G00 - G14,	H00 - H04,	J00 - J08,	
K00 - K14,	L00 - L04,	M00 - M08,	
N00 - N14,	P00 - P04,	Q00 - Q08,	

Copyright © 2006 Lucent Technologies

R00 - R14,	S00 - S04,	T00 - T08,	
U00 - U14,	V00 - V04,	W00 - W08,	
X00 - X14,	Y00 - Y04,	Z00 - Z08	

Data Rules:

If 1 is entered, UNIT TYPE on the EQIM form (5700 Record) must be "MCTU3", "SMPU3", "SMPU4", or an SM-2000 class processor.

2.7 #UNIT VERTICAL

Description: Enter the Vertical Equipment Location that specifies the bottom of the unit. The recommended values for this are:

5E9(1) and earlier: 15, 24, 32, 41, 49, 58, 69, 76
5E9(2) and later: 7, 15, 24, 32, 41, 49, 58, 69, 76

Required Field.
Valid Entries: 0 - 84

2.8 #EQUIPMENT AISLE

Description: Enter the Equipment Location Aisle Number. This entry consists of a floor and aisle number. The first and second digits, from the left, are the floor number. Valid floor numbers are 00-99. The third and fourth digits, from the left, are the aisle number. Valid aisle numbers are 00-99. It is recommended that floor 00 be used for equipment located in the basement per floor plan designation.

Required Field.
Valid Entries: 0000 - 9999

2.9 INTF UNIT

Description: Enter the Interface Unit number. This field was added to support the 5E15 Optically Extended Control and Data Unit feature. See Division 2, Section 9V.

Required Field.
Valid Entries: 0 - 8

Data Rules:

When INTF UNIT is greater than 0, it must be defined on the EQXCDU form for the same Switching Module. In addition, the EQSTAT value on the EQCI must not exceed the MOD CTL SG0/1 EQSTAT on the EQXCDU form (5853 Record). (EQSTAT of "O" is greater than EQSTAT of "G", and EQSTAT of "G" is greater than EQSTAT of "U".)

The SM/INTF UNIT/DATA GRP combinations entered on this form must be defined on a EQDI form or a EQXCDU form. Also, the EQSTAT on the matching EQDI or EQXCDU form must be greater than or equal to the equipment status value ("O", "G", or "U") on this form (e.g., "O" is greater than "G" which is greater than "U"). Note also that when INTF UNIT is greater than 0 and DATA GRP is 0, these Data Groups are defined on the EQXCDU form.

For 5E16(2) and later, when INTF UNIT is 0, EQUIPMENT BAY must be 000 - 014, 100 - 104, or 200 - 208.

Copyright © 2006 Lucent Technologies

SERVICE GROUPS 0 and 1

The following fields (Section 2.10 - Section 2.14) define the Control and Data Groups, the Control and Data Ports, and the Metallic Test Buses for Service Groups 0 and 1. All five entries for each Service Group must be assigned.

2.10 CONTROL GROUP

Description: Enter the Control Group Number.

NOTE: For 5E9(2) and later, 0 - 1 is used for SMs; 0 - 3 is used for SM-2000.

Required Field.
Valid Entries:
5E9(1) and earlier: 0 - 1
5E9(2) and later: 0 - 3

Data Rules:

The combination of Control Group and Control Port values must be unique for the two Service Groups.

The Control Group value must be the same for both Service Groups 0 and 1.

For 5E9(1) and earlier, if CONTROL GROUP is 0 for a SWITCHING MODULE (defined on an EQIM form) where UNIT TYPE is not "SM2000"), CONTROL PORT may not be 0 or 1; these ports are reserved for the LDSU (Local Digital Service Unit).

CONTROL GROUP numbers assigned on the following forms must be defined as CI on an EQCI form: EQDCTU (5751 Record), EQDCLU (5810 Record), EQDS (5740 Record), EQDSC3 (5852 Record), EQDUP (5730-2), EQGDSC3 (5860 Record), EQIDCU (5846 Record), EQISLU (5731 Record), EQISTF (5823 Record), EQLU (5710 Record), EQPSU (5741 Record), EQRA (5821 Record), EQTU (5720 Record), EQFIU (5753 Record), EQMSU (5750 Record), EQRCLK (5723 Record). Furthermore, the EQSTAT on the matching EQCI form must be greater than or equal to the equipment status value on the equipment form (i.e., "O"' is greater than "G" which is greater than "U").

2.11 # CONTROL PORT

Description: Enter the Control Port Number. Even numbered Control Ports are in Service Group 0. Odd numbered Control Ports are in Service Group 1.

Required Field.
Valid Entries: 0 - 22

Data Rules:

The Control Group Number and Control Port Number combination must be unique for the two Service Groups.

Control Port 22 may not be assigned since consecutive even/odd Control Ports are required and Control Port 23 is invalid.

Control Port assignments cannot be duplicated on the following forms: EQDCTU (5751 Record), EQDCLU (5810 Record), EQDS (5740 Record), EQDSC3 (5852 Record), EQDUP (5730-2), EQGDSC3 (5860 Record),

Copyright © 2006 Lucent Technologies

EQIDCU (5846 Record), EQISLU (5731 Record), EQRISLU (5732 Record), EQISTF (5823 Record), EQLU (5710 Record), EQPSU (5741 Record), EQRA (5821 Record), EQTU (5720 Record), EQFIU (5753 Record), EQMSU (5750 Record), EQRCLK (5723 Record).

For 5E12 and later, for the EQAIU, EQIDCU, EQISLU, EQRISLU and EQPSU forms, two control ports are assigned based on the Control Port entered on the form. The first is the Control Port entered on the form, the second Control Port is one plus the Control Port entered on the form. Non-SM-2000 class processors reserve Control Group/Control Port 0/0 and 0/1 for the Local Digital Service unit. No other unit may specify Control Group/Control Port 0/0 or 0/1 for non-SM-2000 class processors. Non-SM-2000 class processors reserve Control Group/Control Port 0/0 and 0/1 for the Local Digital Service unit. No other unit may specify Control Group/Control Port 0/0 or 0/1 for non-SM-2000 class processors.

2.12 #DATA GROUP

Description: Enter the Data Group Number.

NOTE: For 5E9(2) and later, 0 - 1 is used for SMs; 0 - 5 is used for SM-2000.

Required Field.

Valid Entries:

5E9(1) and earlier: 0 - 1
5E9(2) and later: 0 - 5

Data Rules:

The Data Group value must be the same for both Service Groups 0 and 1.

For 5E9(2) and later, the Data Group value must be defined as DI on an EQDI form (5849 Record).

For 5E9(1) and earlier the combination of DATA GROUP 1 and DATA PORT 15 for Service Group 0 or Service Group 1 are reserved for SMs (i.e., cannot be assigned to SM-2000).

The following forms cannot have a duplicate Data Port assignment on the same Switching Module: EQDCLU (5810 Record), EQDS (5740 Record), EQDSC3 (5852 Record), EQDUP (5730-2), EQGDSC3 (5860 Record), EQIDCU (5846 Record), EQISLU (5731 Record), EQISTF (5823 Record), EQLU (5710 Record), EQPSU (5741 Record), EQRA (5821 Record), EQTU (5720 Record).

2.13 # DATA PORT

Description: Enter the Data Port Number. Even numbered Data Ports are in Service Group 0. Odd numbered Data Ports are in Service Group 1.

NOTE: For 5E9(2) and later, 0 - 15 is used for SMs; 0 - 23 is used for SM-2000.

Required Field.

Valid Entries:

5E9(1) and earlier: 0 - 15
5E9(2) and later: 0 - 23

Data Rules:

The Data Group Number and Data Port Number combination must be unique for the two Service Groups.

For 5E9(1) and earlier the combination of DATA GROUP 1 and DATA PORT 15 for Service Group 0 and Service Group 1 are reserved for SMs (i.e., cannot be assigned to SM-2000).

2.14 #METALLIC TEST BUS

Description: Enter the Metallic Test Bus Equipment assignment. Metallic Test Bus Point 15 of every MACC pack, is reserved for general internal MSU and MMSU diagnostics. Protocol or diode resistor tests are included in general internal diagnostics. Assign the Metallic Test Bus Equipment per SD-5D007-01.

Required Field.

This number consists of:

Valid METALLIC TEST BUS Entries

Equipment		Format	Valid Entries
Switching Module	SM	XXX	1 - 192
Metallic Service Unit	MSU	X	0 - 5
Service Group	SVG	X	0 - 1
Board	BRD	XX	00 - 15 (Regular)
			00 - 31 (Modular)
Bus	BUS	XX	00 - 14

Data Rules:

The Metallic Test Bus assignment must be a unique value for each Service Group.

For 5E9(2) and earlier, Line Unit Service Group 0 and 1 require MTB assignments from an MSU/MMSU associated with Service Group 0 and 1, respectively.

If the MTB pack resides upon an ORM, RSM, or TRM, the EQLU and the MTBs must share the same SITE ID (on the EQIM form). If this is a remote SITE ID (does not reside in the local office), the MTBs must reside on the Common Resource Module (denoted by MASTER MODULE on a corresponding EQSITE form (5722 Record)). This rule does not apply to co-located ORMs/TRMs sharing resources as co-located ORMs/TRMs and ORMs/TRMs which are not co-located are not distinguishable (in static data).

```
eqlu                              5ESS Switch
(5710)                      OFFICE DATA ADMINISTRATION
                                LINE UNIT EQUIPAGE
*1. SWITCHING MODULE    ___
*2. LINE UNIT           __
 3. EQUIPMENT STATUS    _
 4. LINE UNIT TYPE      ____
 5. EQUIPMENT BAY       ___
 6. UNIT VERTICAL       __
 7. EQUIPMENT AISLE     ____

                        SERVICE GROUP 0   SERVICE GROUP 1
     CONTROL GROUP       8. _             13. _
```

```
CONTROL PORT          9. __            14. __
DATA GROUP           10. _             15. _
DATA PORT            11. __            16. __
METALLIC TEST BUS    12. __________    17. __________
```

Figure 1 SAMPLE EQLU FORM 5E6 - 5E14 SOFTWARE RELEASES

```
eqlu                          5ESS Switch            _
(5710)                   OFFICE DATA ADMINISTRATION
                             LINE UNIT EQUIPAGE

 *1. SWITCHING MODULE   ___
 *2. LINE UNIT          __
 #3. EQUIPMENT STATUS   _
 #4. LINE UNIT TYPE     ____
 #5. EQUIPMENT BAY      ___
 #6. UNIT VERTICAL      __
 #7. EQUIPMENT AISLE    ____
  8. INTF UNIT          0

                         SERVICE GROUP 0   SERVICE GROUP 1
    CONTROL GROUP          9._             #14._
    CONTROL PORT         #10.__            #15.__
    DATA GROUP           #11._             #16._
    DATA PORT            #12.__            #17.__
    METALLIC TEST BUS    #13._________     #18._________
```

Figure 2 SAMPLE EQLU FORM 5E15 AND LATER SOFTWARE RELEASES

Copyright © 2006 Lucent Technologies

SEC. 10: 5711 RECORD
LINE UNIT PACK EQUIPAGE FORM - EQLUP

1. GENERAL

The 5711 Record is available with the 5E1 and later Software Releases. It is used to define Line Unit pack assignments in a 5ESS Switch.

The Line Unit Pack Equipage Record contains information needed to initialize the pack equipment configuration of Line Units.

Line Units (EQLU (5710 Record) and EQLUP forms), Integrated Services Line Units (EQISLU form (5731 Record)) and Remote Integrated Services Line Units (EQRISLU form (5732 Record)) share the same unit number range.

1.1 Recent Change

The corresponding Recent Change/Verify view for this form is 20.1

2. FORM ENTRIES

2.1 BASE AND CONTROL, ESS UNIT

Enter the Base and Control Number and the office name on each record.

2.2 *SWITCHING MODULE

Description: Enter the Switching Module Number.

Required Field.
Valid Entries: 1 - 192

2.3 *LINE UNIT

Description: Enter the Line Unit Number. For 5E9(2) and later, for Classic SMs, 0 - 7 is used; for SM-2000, 0 - 42 is used.

Required Field.
Valid Entries:
5E9(1) and earlier: 0 - 7
5E9(2) and later: 0 - 42

Data Rules:

Unit numbers assigned on this form may not be assigned on the EQISLU or EQRISLU forms with the same switching module number.

For 5E9(2) and later, when LINE UNIT is greater than 7 (i.e, SM-2000), LINE UNIT TYPE must be "4AD1".

2.4 LINE UNIT TYPE

Description: Enter the Line Unit Type.

Copyright © 2006 Lucent Technologies

Required Field.
Default: 4AC2
Valid Entries:

Valid LINE UNIT TYPE Entries	
Entry	**Definition**
4AB1	2-shelf Model 1 Line Unit.
4AC1 or 4AC2	2-shelf Model 2 Line Unit. Note that the 4AC1 and 4AC2 LUs contain the same physical packs.
4AD1	2-Shelf Model 3 Line Unit. Provides a 10:1 concentration ratio.

Data Rules:

For 5E9(2) and later, if UNIT TYPE on the EQIM form (5700 Record) is "SM2000", LINE UNIT TYPE must be "4AD1".

2.5 LU CONC RATIO

Description: Enter one of the four Line Unit Concentration Ratios.

Required Field.
Default: 8:1
Valid Entries: 10:1, 8:1, 6:1, or 4:1

Data Rules:

Ratio 4:1 is not valid when the Line Unit Type is "4AB1".

Ratio 10:1 is valid only when Line Unit Type is "4AD1".

LINE UNIT GRIDS

The following fields (Section 2.6 - Section 2.7) define the STATUS and the CHANGE LEVEL INDICATOR for each Line Unit Grid (0 - 9).

The number of equipped (Operational) Grids is directly related to the desired Line Unit Concentration Ratio.

Line Unit Concentration Ratio	Grids Equipped
10:1	0-9
8:1	0-7
6:1	0-5
4:1	0-3

Only TN1058 and TN1058B Grid packs can be used with Carbon Block Protectors. TN1048, TN1058 and TN1058B Grid packs may be used with Gas Tube Protectors.

If LU CONC RATIO is "4AC1" or "4AC2" and TN1038, TN1048, TN1058, or TN1058B Grid packs are used, the TN842B Common Board must be used. The TN838 Grid pack may be used with either the TN842 or TN842B Common Board.

If LU CONC RATIO is "4AD1" and TN1048, TN1058, or TN1058B Grid packs are used, the UN322 Common Board must be used.

NOTE: TN1048 and TN1058 (TN1058B, etc.) Grid packs cannot be mixed on the same Line Unit.

Copyright © 2006 Lucent Technologies

2.6 EQUIPMENT STATUS

Description: Enter the status of the Line Unit Pack.

Valid EQUIPMENT STATUS Entries

Entry	Definition
G	Growth.
O	Operational.
U	Unequipped.

For new offices and units destined for factory testing, Operational is the only allowed value. During offline ODA data base retrofits, the other values are valid.

2.7 CHANGE LEVEL INDICATOR

Description: For each Grid enter the Change Level Indicator.
Valid Entries: 0 to 7FFFFFFF (hexadecimal)

For a complete listing of valid CLI values, J-Drawing and list combinations, see Division 8, Section 1.

Data Rules:

If EQUIPMENT STATUS contains an entry, CHANGE LEVEL INDICATOR must contain an entry and vice versa.

HIGH LEVEL SERVICE CIRCUIT

The following fields (Section 2.8 - Section 2.9) define the STATUS and the CHANGE LEVEL INDICATOR for High Level Service Units for Service Groups 0 and 1 for Packs 0, 1, and 2.

2.8 EQUIPMENT STATUS

Description: Enter the status of the High Level Service Circuit.

Valid EQUIPMENT STATUS Entries

Entry	Definition
G	Growth.
O	Operational.
U	Unequipped.

Data Rules:

For 5E9(1) and earlier, High Level Service Circuits 00, 01, 10, and 11 must always be equipped (Operational).

For 5E9(2) and later, High Level Service Circuits 00, and 10, must always be equipped (Operational).

For new offices and units destined for factory testing, Operational is the only allowed value. During offline ODA data base retrofits, the other values are valid.

2.9 CHANGE LEVEL INDICATOR

Description: For each High Level Service Center enter the Change Level Indicator.
Valid Entries: 0 to 7FFFFFFF (hexadecimal)

For a complete listing of valid CLI values, J-Drawing and list combinations, see Division 8, Section 1.

Copyright © 2006 Lucent Technologies

Data Rules:

If EQUIPMENT STATUS contains an entry, CHANGE LEVEL INDICATOR must contain an entry.

REQUIRED CIRCUIT PACKS - CLI

The following fields (Section 2.10 - Section 2.21) define the Change Level Indicator for each of the required circuit packs. For a complete listing of valid CLI values, J-Drawing and list combinations, see Division 8, Section 1. The table below indicates required circuit packs by type of LU.

Required Circuit Packs by LU Type				
Circuit Pack	**4AB1**	**4AC1**	**4AC2**	**4AD1**
Common Board	X	X	X	X
Channel Board	X	X	X	X
Channel CKT	X	X	X	X
Linearization	X	X	X	X
Concentrator	X	-	-	-
GDX ACCESS CKT	X	X	X	X
600 OHM TEST	-	X	X	X
900 OHM TEST	X	X	X	X
2K OHM TEST	-	X	X	X
TEST PAD	X	-	-	-
GDX CONTROLLER	X	-	-	-
DIODE TEST	X	-	-	-

2.10 COMMON BOARD

Description: Enter the CLI for the Common Board circuit pack.
Valid Entries: 0 to 7FFFFFFF (hexadecimal)

2.11 CHANNEL BOARD

Description: Enter the CLI for the Channel Board circuit pack.
Valid Entries: 0 to 7FFFFFFF (hexadecimal)

2.12 CHANNEL CKT

Description: Enter the CLI for the Channel Circuit circuit pack.
Valid Entries: 0 to 7FFFFFFF (hexadecimal)

2.13 LINEARIZATION

Description: Enter the CLI for the Linearization circuit pack.
Valid Entries: 0 to 7FFFFFFF (hexadecimal)

2.14 CONCENTRATOR

Description: Enter the CLI for the Concentrator circuit pack.
Valid Entries: 0 to 7FFFFFFF (hexadecimal)

2.15 GDX ACCESS CKT

Description: Enter the CLI for the GDX Access Circuit circuit pack.
Valid Entries: 0 to 7FFFFFFF (hexadecimal)

2.16 600 OHM TEST

Copyright © 2006 Lucent Technologies

Description: Enter the CLI for the 600 OHM Test circuit pack.
Valid Entries: 0 to 7FFFFFFF (hexadecimal)

2.17 900 OHM TEST

Description: Enter the CLI for the 900 OHM Test circuit pack.
Valid Entries: 0 to 7FFFFFFF (hexadecimal)

2.18 2K OHM TEST

Description: Enter the CLI for the 2K OHM Test circuit pack.
Valid Entries: 0 to 7FFFFFFF (hexadecimal)

2.19 TEST PAD

Description: Enter the CLI for the Test Pad circuit pack.
Valid Entries: 0 to 7FFFFFFF (hexadecimal)

2.20 GDX CONTROLLER

Description: Enter the CLI for the GDX Controller circuit pack.
Valid Entries: 0 to 7FFFFFFF (hexadecimal)

2.21 DIODE TEST

Description: Enter the CLI for the Diode Test circuit pack.
Valid Entries: 0 to 7FFFFFFF (hexadecimal)

```
SCREEN 1 of 2                    5ESS Switch
eqlup                     OFFICE DATA ADMINISTRATION
(5711)                     LINE UNIT PACK EQUIPAGE
*1. SWITCHING MODULE ___
*2. LINE UNIT        _
 3. LINE UNIT TYPE   4AC1
 4. LU CONC RATIO    8:1

               EQUIPMENT    CHANGE LEVEL                EQUIPMENT    CHANGE LEVEL
                  STATUS       INDICATOR                  STATUS       INDICATOR
 LU GRID 0       5.  _      6.  ________  HLSC(SG0,PK0) 25.  _     26.  ________
 LU GRID 1       7.  _      8.  ________  HLSC(SG0,PK1) 27.  _     28.  ________
 LU GRID 2       9.  _     10.  ________  HLSC(SG0,PK2) 29.  _     30.  ________
 LU GRID 3      11.  _     12.  ________  HLSC(SG1,PK0) 31.  _     32.  ________
 LU GRID 4      13.  _     14.  ________  HLSC(SG1,PK1) 33.  _     34.  ________
 LU GRID 5      15.  _     16.  ________  HLSC(SG1,PK2) 35.  _     36.  ________
 LU GRID 6      17.  _     18.  ________
 LU GRID 7      19.  _     20.  ________
 LU GRID 8      21.  _     22.  ________
 LU GRID 9      23.  _     24.  ________
```

```
SCREEN 2 of 2                    5ESS Switch
eqlup                     OFFICE DATA ADMINISTRATION
(5711)                     LINE UNIT PACK EQUIPAGE
   REQUIRED CKT    CHANGE LEVEL
     PACKS           INDICATOR
37. COMMON BOARD     _________
38. CHANNEL BOARD    _________
39. CHANNEL CKT      _________
40. LINEARIZATION    _________
41. CONCENTRATOR     _________
42. GDX ACCESS CKT   _________
43. 600 OHM TEST     _________
44. 900 OHM TEST     _________
45. 2K OHM TEST      _________
46. TEST PAD         _________
47. GDX CONTROLLER   _________
48. DIODE TEST       _________
```

Figure 1 SAMPLE EQLUP FORM 5E6 AND LATER SOFTWARE RELEASES

Copyright © 2006 Lucent Technologies

SEC. 11: 5712 RECORD
CONSTRUCTED FEATURE LIMIT FORM - CFL

1. GENERAL

The CFL (Constructed Feature Limit) form is applicable to 5E2(1) and later Software Releases. The input form is optional and is under control of the S.E.E. for insert, update and delete purposes. The switch owner can only read (review) the form to see if it is present or absent from the input data base. There is only one fixed value form instance which is based on whether the customer has purchased the BRCS Feature Construction package. (Refer to the appropriate DOPS output item.)

The S.E.E. is responsible for doing an insert on the CFL form if and only if the customer has purchased the BRCS Construction package. Inserting this form into the data base forces the internal Constructed Feature Limit to 9999. If the form is not submitted, then the CFL is set to zero.

Constructed Features are those BRCS Feature Names that are assigned on the following list of Feature Definition forms and do not start with the slash character "/". Features defined on the ID (Individualized Dialing) and PFA (Private Facility Access), are not counted towards the constructed Feature Limit.

Feature Definition Forms	
ACBFD	Automatic Callback Feature Definition
ACCTFD	Call Forwarding Feature Definition
ACVTFD	ISDN Attendant Control of Voice Terminals Feature Definition
ARSFD	Automatic Route Selection Feature Definition
ATHFD	Authorization Code Feature Definition
CFWFD	Call Forwarding Feature Definition
CWTFD	Call Waiting Feature Definition
DISPFD	Display and Privacy Feature Definition
DRFD	Distinctive Ringing Feature Definition
EDSFD	Electronic Directory Service Feature Definition
ICMFD	SDN Intercom Feature Definition
LIDFD	Line Identification Feature Definition
MDRFD	Message Detail Recording Feature Definition
MLHGFD	Multi-Line Hunt Group Feature Definition
MSFD	Message Service System Feature Definition
MWFD	Multiway Feature Definition
PPFD	Precedence and Preemption Feature Definition
PUOFD	Pickup Originating Feature Definition
PUTFD	Pickup Terminating Feature Definition
QUFD	Modular Queuing Feature Definition
TGSRFD	Terminal Group/Station Restriction Feature Definition
TODFD	Time of Day Feature Definition

The Constructed Feature Limit is set internally by the presence or absence of the CFL form and is not shown on either the input screen or on the 5712 Record.

The Record Number, 5712, has been assigned to this form to provide for output when the "records" command is used in the ODA data base. However, the screen image of the input form will be printed and a reproducible record is not provided. The record (screen) contains only the single key value of zero if the form is present.

2. FORM ENTRIES

2.1 * KEY

Enter the key value which is always 0 (zero). Insert form if BRCS Construction was purchased; else do not submit the form.

Copyright © 2006 Lucent Technologies

```
cfl                                5ESS Switch            _
(5712)                     OFFICE DATA ADMINISTRATION
                           CONSTRUCTED FEATURE LIMIT


* 1. KEY  0
```

Figure 1 SAMPLE CONSTRUCTED FEATURE LIMIT FORM 5E8 AND LATER SOFTWARE RELEASES

Copyright © 2006 Lucent Technologies

SEC. 12: DIVISION 8, SECTION 12 IS MOVED TO DIVISION 3, SECTION 5AR

1. SECURED FEATURE SYSTEM ASSIGNMENT FORM - SFSYS MOVED TO DIVISON 3, SECTION 5AR

Division 8, Section 12 for the Secured Feature System Assignment Form - SFSYS (5713) has been moved to Division 3, Section 5AR.

2. REMOVE DIVISION 8, SECTION 12

Please remove Division 8, Section 12 and add the new section, Division 3, Section 5AR to your TG-5.

Copyright © 2006 Lucent Technologies

SEC. 13: 5720 RECORD
TRUNK UNIT EQUIPMENT RECORD
TRUNK UNIT EQUIPAGE FORM (EQTU)
TRUNK UNIT PACK EQUIPAGE FORM (EQTUP)

1. GENERAL

The 5720 Record is available with 5E2(2) and later Software Releases. It is used to define Trunk Unit Assignments. For 5E10 and later, trunk units are applicable to SM2000.

This record is intended to be used as an Office Record for those 5ESS offices that are not utilizing an Operational Support System (e.g. RMAS) for generation of Office Records.

The Trunk Unit Equipment Record is used to define the Interface Module, Trunk Unit, Service Group, and Pack Position.

2. FORM ENTRIES - EQTU

2.1 BASE AND CONTROL GROUP, ESS UNIT

Enter the Base and Control Number and the office name on each record.

2.2 *SWITCHING MODULE

Description: Enter the Interface Module Number.

Required Field.
Valid Entries: 1 - 192

2.3 *TRUNK UNIT

Description: Enter the Trunk Unit Number.

Required Field.
Valid Entries: 0 - 7

2.4 *SERVICE GROUP

Description: Enter the Service Group Number.

Required Field.
Valid Entries: 0 - 1

Data Rules:

If SERVICE GROUP is 0, Control Port must be a even number.

If SERVICE GROUP is 1, Control Port must be a odd number.

For 5E2(2) through 5E9(2), if SERVICE GROUP is 0, the MTB assignment must be from SERVICE GROUP 0 of an MSU.

For 5E2(2) through 5E9(2), if SERVICE GROUP is 1, the MTB assignment must be from SERVICE GROUP 1

Copyright © 2006 Lucent Technologies

of an MSU.

2.5 EQUIPMENT STATUS

Description: Enter the Status of the Equipment. For new offices and units destined for factory testing, operational is the only allowed value. During offline ODA data base retrofits, the other values are valid.

Required Field.
Default: 0
Valid Entries:

Valid EQUIPMENT STATUS Entries

Entry	Definition
G	Growth.
O	Operational.
U	Unequipped.

2.6 CONTROL GROUP

Description: Enter the Control Group Number.

Required Field.

NOTE: For 5E10 and later, 0 - 1 is used for SMs; 0 - 3 is used for SM-2000.

Required Field.
Valid Entries:
5E9(2) and earlier: 0 - 1
5E10 and later: 0 - 3

Data Rules:

If CONTROL GROUP is 0, Control Ports 0 and 1 must be blank; they are reserved for the Local DSU.

For 5E10 and later, if CONTROL GROUP is greater than 1, the associated EQIM form must has a UNIT TYPE set to "SM2000".

CONTROL GROUP numbers assigned on the following forms must be defined as CI on an EQCI form: EQDCTU (5751 Record), EQDCLU (5810 Record), EQDS (5740 Record), EQDSC3 (5852 Record), EQDUP (5730-2), EQGDSC3 (5860 Record), EQIDCU (5846 Record), EQISLU (5731 Record), EQISTF (5823 Record), EQLU (5710 Record), EQPSU (5741 Record), EQRA (5821 Record), EQTU (5720 Record), EQFIU (5753 Record), EQMSU (5750 Record), EQRCLK (5723 Record). Furthermore, the EQSTAT on the matching EQCI form must be greater than or equal to the equipment status value on the equipment form (i.e., "O"' is greater than "G" which is greater than "U").

2.7 CONTROL PORT

Description: Enter the Control Port Number.

Required Field.
Valid Entries: 0 - 22

Data Rules:

Copyright © 2006 Lucent Technologies

Control Port assignments must be unique for the same SM.

Control Port assignments cannot be duplicated on the following forms: EQDCTU (5751 Record), EQDCLU (5810 Record), EQDS (5740 Record), EQDSC3 (5852 Record), EQDUP (5730-2), EQGDSC3 (5860 Record), EQIDCU (5846 Record), EQISLU (5731 Record), EQRISLU (5732 Record), EQISTF (5823 Record), EQLU (5710 Record), EQPSU (5741 Record), EQRA (5821 Record), EQTU (5720 Record), EQFIU (5753 Record), EQMSU (5750 Record), EQRCLK (5723 Record).

For 5E12 and later, for the EQAIU, EQIDCU, EQISLU, EQRISLU and EQPSU forms, two control ports are assigned based on the Control Port entered on the form. The first is the Control Port entered on the form, the second Control Port is one plus the Control Port entered on the form. Non-SM-2000 class processors reserve Control Group/Control Port 0/0 and 0/1 for the Local Digital Service unit. No other unit may specify Control Group/Control Port 0/0 or 0/1 for non-SM-2000 class processors. Non-SM-2000 class processors reserve Control Group/Control Port 0/0 and 0/1 for the Local Digital Service unit. No other unit may specify Control Group/Control Port 0/0 or 0/1 for non-SM-2000 class processors.

2.8 DATA GROUP

Description: Enter the Data Group Number.

Required Field.

NOTE: For 5E10 and later, 0 - 1 is used for SMs; 0 - 5 is used for SM-2000.

Required Field.
Valid Entries:
5E9(2) and earlier: 0 - 1
5E10 and later: 0 - 5

Data Rules:

For 5E9(2) and earlier, the combination of DATA GROUP 1 and DATA PORT 15 cannot be assigned, it is reserved.

For 5E10 and later, if DATA GROUP is greater than 1, UNIT TYPE on the EQIM form must be set to an SM-2000 class processor.

For 5E10 and later, the combination of DATA GROUP set to 1 and DATA PORT set to 15 for SERVICE GROUP 0 or SERVICE GROUP 1 cannot be assigned where UNIT TYPE is set to an SM-2000 class processor on the corresponding EQIM form. DATA GROUP 1 and DATA PORT 15 are reserved for SMs.

2.9 DATA PORT

Description: Enter the Data Port Number.

Required Field.
Valid Entries: 0 - 15

Data Rules:

The following forms cannot have a duplicate Data Port assignment on the same Switching Module: EQDCLU (5810 Record), EQDS (5740 Record), EQDSC3 (5852 Record), EQDUP (5730-2), EQGDSC3 (5860 Record), EQIDCU (5846 Record), EQISLU (5731 Record), EQISTF (5823 Record), EQLU (5710 Record), EQPSU

Copyright © 2006 Lucent Technologies

(5741 Record), EQRA (5821 Record), EQTU (5720 Record).

2.10 METALLIC TEST BUS

Description: Enter the Equipment assignment for the Metallic Test Bus.

This number consists of an 9-digit number as indicated below:

Valid MTS 0 Entries			
Equipment		**Format**	**Valid Entries**
Switching Module	SM	XXX	1-192
Metallic Service Unit	MSU	X	0-1
Service Group	SVG	X	0
Board	BRD	XX	00-15 (Regular MSU)
			00-31 (Modular MSU)
BUS	BUS	XX	00-14
			00-14 (Modular MSU)

NOTE: Metallic Test Bus Point 15 of every MACC pack is reserved for general MSU and MMSU diagnostics. Protocol test or diode resistor test are included in general internal diagnostics.

Data Rules:

For 5E9(1) and later, if this pack resides on an ORM, RSM or TRM, the MTB assigned to this unit must terminate to an SM with the same value of SITE ID on an EQIM form (5700 Record). And, if this is a remote SITE ID, the MTBs must reside on the Common Resource Module (denoted by MASTER MODULE on a corresponding EQSITE form (5722 Record).

2.11 EQUIPMENT BAY

Description: Enter the Equipment Location Bay Number.

Required Field.
Valid Entries:

Valid EQUIPMENT BAY Entries, 5E9(2) - 5E16(1)	
Entry	**Definition**
0 - 4	Switching Module (non-SM-2000).
0 - 14	SM-2000; SM Cabinet aisle.
100 - 104	SM-2000; Back panel; wiring position.
200 - 208	SM-2000; Front panel; door position.

Valid EQUIPMENT BAY Entries for 5E16(2) and later			
Entry			**Type**
000 - 004			SM
000 - 014,	100 - 104,	200 - 208,	SM-2000
A00 - A14,	B00 - B04,	C00 - C08,	
D00 - D14,	E00 - E04,	F00 - F08,	
G00 - G14,	H00 - H04,	J00 - J08,	
K00 - K14,	L00 - L04,	M00 - M08,	
N00 - N14,	P00 - P04,	Q00 - Q08,	
R00 - R14,	S00 - S04,	T00 - T08,	
U00 - U14,	V00 - V04,	W00 - W08,	
X00 - X14,	Y00 - Y04,	Z00 - Z08	

Copyright © 2006 Lucent Technologies

Data Rules:

EQUIPMENT BAY and UNIT VERTICAL values within the same SM must be unique.

If 1 is entered, UNIT TYPE on the EQIM form (5700 Record) must be "MCTU3", "SMPU3", "SMPU4", or an SM-2000 class processor.

2.12 UNIT VERTICAL

Description: Enter the Vertical Equipment Location that specifies the bottom of the unit. Enter the same Equipment Location for both Service Groups of a given unit number (e.g. Service Groups 0 and 1 of a Trunk Unit would indicate the same Vertical Equipment Location on the Trunk Unit Equipage Form (EQTU)).

Recommended positions are as follows:
For 7-foot cabinets: 22, 30, 39, 48, 56, 65, 74
For 6-foot cabinets: 7, 15, 24, 32, 41, 49, 58

Required Field.
Valid Entries: 00 - 84

Data Rules:

EQUIPMENT BAY and UNIT VERTICAL values within the same SM must be unique.

2.13 EQUIPMENT AISLE

Description: Enter the Equipment Aisle Number. This entry consists of a floor and aisle number. The first and second digits, from the left, are the floor number. Valid floor numbers are 00-99. The third and fourth digits, from the left, are the aisle number. Valid aisle numbers are 00-99. It is recommended that floor 00 be used for equipment located in the basement per floor plan designation.

Required Field.
Valid Entries: 00 - 99

2.14 CONTROL/DATA CIRCUIT CLI

Description: Enter the Control/Data Circuit Change Level Indicator. This circuit is provided as part of the basic unit per Service Group. Refer to Division 8, Section 1 for a list of CLI values.

Required Field.
Valid Entries: 0 to 7FFFFFFF (hexadecimal)

2.15 TEST ACCESS CIRCUIT CLI

Description: Enter the Test Access Circuit Change Level Indicator. This circuit is provided as part of the basic unit per Service Group.

Required Field.
Valid Entries: 0 to 7FFFFFFF (hexadecimal)

2.16 INTF UNIT

Description: Enter the Interface Unit number. This field was added to support the 5E15 Optically Extended

Copyright © 2006 Lucent Technologies

Control and Data Unit feature. See Division 2, Section 9V.

Required Field.
Valid Entries: 0 - 8

Data Rules:

When INTF UNIT is greater than 0, it must be defined on the EQXCDU form for the same Switching Module. In addition, the EQSTAT value on the EQCI must not exceed the MOD CTL SG0/1 EQSTAT on the EQXCDU form (5853 Record). (EQSTAT of "O" is greater than EQSTAT of "G", and EQSTAT of "G" is greater than EQSTAT of "U".)

The SM/INTF UNIT/DATA GRP combinations entered on this form must be defined on a EQDI form or a EQXCDU form. Also, the EQSTAT on the matching EQDI or EQXCDU form must be greater than or equal to the equipment status value ("O", "G", or "U") on this form (e.g., "O" is greater than "G" which is greater than "U"). Note also that when INTF UNIT is greater than 0 and DATA GRP is 0, these Data Groups are defined on the EQXCDU form.

For 5E16(2) and later, when INTF UNIT is 0, EQUIPMENT BAY must be 000 - 014, 100 - 104, or 200 - 208.

3. FORM ENTRIES - EQTUP

3.1 *PACK POSITION

Description: Enter the Trunk Unit Pack Number.

Required Field.
Valid Entries: 0 - 7

3.2 CIRCUIT TYPE

Description: Enter the Circuit Type (Hardware).

Valid CIRCUIT TYPE Entries

Entry	Definition
TRKLO	Loop Outgoing Trunk.
TRKLI	Loop Incoming Trunk.
TRK2EM	2-Wire E&M Trunk.
TRK4EM	4-Wire E&M Trunk.
TRKTST	Test Trunk Circuit.
TKLOTOL	Loop Outgoing Trunk (Toll).
TKLITOL	Loop Incoming Trunk (Toll).
TK2ETOL	2-Wire E&M Trunk (Toll).
TK4ETOL	4-Wire E&M Trunk (Toll).

Data Rules:

If CIRCUIT TYPE is TRKTST, EQSTAT "2" and "3" must be blank, and MTB0 and MTB1 must be entered.

If CIRCUIT TYPE is not TRKTST, EQSTAT "2" and "3" must be entered, and MTB0 and MTB1 must be blank.

3.3 CHANGE LEVEL INDICATOR

Description: Enter CLI value.
Valid Entries: 0 to 7FFFFFFF (hexadecimal)

Copyright © 2006 Lucent Technologies

3.4 CLEI

Description: Enter the Common Language Equipment Identification. See the appropriate J-Drawing for the applicable CLEI codes.

3.5 CKT 0/1/2/3 STATUS

Description: Enter the status of the circuit. For new offices and units destined for factory testing, operational is the only allowed value. During offline ODA data base retrofits, the other values are valid.

Required Field (for CKT 0, 1).
Default: O (for CKT 0, 1)
Valid Entries:

Valid CKT 0/1/2/3 STATUS Entries

Entry	Definition
U	Unequipped.
O	Operational.
G	Growth.

3.6 MTB0

Description: For each Circuit 0 or 1 of a Test Trunk (CIRCUIT TYPE is TRKTST), enter the Equipment Assignment for Metallic Test Bus 0.

This number consists of an 9-digit number as indicated below:

Valid MTS 0 Entries

Equipment		Format	Valid Entries
Switching Module	SM	XXX	1-192
Metallic Service Unit	MSU	X	0-1
Service Group	SVG	X	0
Board	BRD	XX	00-15 (Non-Modular MSU)
			00-31 (Modular MSU)
BUS	BUS	XX	00-14
			00-15 (Modular MSU)

Data Rules:

The Metallic Test Bus 15 is a fixed assignment to a Diode/Resistor pair circuit and cannot be specified.

3.7 MTB1

Description: Enter the MTB1 value. For each Circuit 0 or 1 of a Test Trunk (CIRCUIT TYPE is TRKTST), enter the Equipment Assignment for Metallic Test Bus 1.

This number consists of an 9-digit number as indicated below:

Valid MTS 1 Entries

Equipment		Format	Valid Entries
Switching Module	SM	XXX	1-192
Metallic Service Unit	MSU	X	0-1
Service Group	SVG	X	0
Board	BRD	XX	00-15 (Regular MSU)

Copyright © 2006 Lucent Technologies

			00-31 (Modular MSU)
BUS	BUS	XX	00-14
			00-15 (Modular MSU)

Data Rules:

The Metallic Test Bus 15 is a fixed assignment to a Diode/Resistor pair circuit and cannot be specified.

MTB0 and MTB1 for circuits 0 and 1 must not be duplicated.

MTBs assigned to LTD test trunks must specify the same IM, MSU, PK POS, BUS and have MTB0 on MSU SG0 and MTB1 on MSU SG1.

```
eqtu                            5ESS Switch            _
5720                      OFFICE DATA ADMINISTRATION
                             TRUNK UNIT EQUIPAGE

 *1. INTERFACE MODULE         ___
 *2. TRUNK UNIT               _
 *3. SERVICE GROUP            _
 #4. EQUIPMENT STATUS         O
 #5. CONTROL GROUP            _             #6. CONTROL PORT          __
 #7. DATA GROUP               _             #8. DATA PORT             __
 #9. METALLIC TEST BUS        _________
#10. EQUIPMENT BAY            ___
#11. UNIT VERTICAL            __
#12. EQUIPMENT AISLE          ____
#13. CONTROL/DATA CIRCUIT CLI ________
#14. TEST ACCESS CIRCUIT CLI  ________
```

Figure 1 SAMPLE EQTU FORM 5E14 AND EARLIER SOFTWARE RELEASES

```
eqtu                            5ESS Switch            _
(5720)                    OFFICE DATA ADMINISTRATION
                             TRUNK UNIT EQUIPAGE

 *1. INTERFACE MODULE  ___              #12. UNIT VERTICAL            __
 *2. TRUNK UNIT        _                #13. EQUIPMENT AISLE          ____
 *3. SERVICE GROUP     _                #14. CONTROL/DATA CIRCUIT CLI ________
  4. EQUIPMENT STATUS  O                #15. TEST ACCESS CIRCUIT CLI  ________

  5. INTF UNIT         0
 #6. CONTROL GROUP     _
 #7. CONTROL PORT      __
 #8. DATA GROUP        _
 #9. DATA PORT         __
#10. METALLIC TEST BUS _________
#11. EQUIPMENT BAY     ___
```

Figure 2 SAMPLE EQTU FORM 5E15 AND LATER SOFTWARE RELEASES

```
eqtup                              5ESS Switch              _
5720                         OFFICE DATA ADMINISTRATION
                              TRUNK UNIT PACK EQUIPAGE



* 1.  INTERFACE MODULE       ___
* 2.  TRUNK UNIT             _
* 3.  SERVICE GROUP          _
* 4.  PACK POSITION          _
  5.  CIRCUIT TYPE           _______
  6.  CHANGE LEVEL INDICATOR ________
  7.  CLEI                   __________

                                          MTB0            MTB1
                                          ----            ----
 8. CKT 0 EQUIPMENT STATUS   O      12. __________  13. __________
 9. CKT 1 EQUIPMENT STATUS   O      14. __________  15. __________
10. CKT 2 EQUIPMENT STATUS   _
11. CKT 3 EQUIPMENT STATUS   _
```

Figure 3 SAMPLE EQTUP FORM 5E8 AND LATER SOFTWARE RELEASES

Copyright © 2006 Lucent Technologies

SEC. 14: 5721 RECORD
TOPAS TERMINAL EQUIPMENT DSX ASSIGNMENT FORM - EQDSX

1. GENERAL

The 5ESS Switch 5721 Record is available with Release 5E4 and later Software Releases. The TOPAS CLLI (Common Language Location Identifier) Form is used by toll offices that employ the TOPAS (Testing, Operations, Provisioning and Administration System) Operations System. The TOPAS Operations System provides circuit order and testing administration for circuits terminating on a 5ESS Switch.

The 5ESS Switch 5721 Record is used to define Switching Module Equipment assignment to a DSX Frame Plate Connector. There will be one Record for each Switching Module, Digital Line/Trunk Unit and DFI Pack combination.

The combination of SM, DLTU and DFI, entered in the first three fields of the EQDSX input form, must be defined in the SWITCHING MODULE, DLTU and DFI PACK NUMBER fields, respectively, on an EQDUP Form (5730 Record).

2. FORM AND RECORD ENTRIES

2.1 BASE AND CONTROL, ESS UNIT

Enter the Base and Control Number and the Office Name on each record.

2.2 *SWITCHING MODULE

Description: Enter the Switching Module Number.

Required Field.
Valid Entries: 1 - 192

2.3 * DLTU

Description: Enter the Digital Line/Trunk Unit number.

Required Field.
Valid Entries:
5E14 and earlier: 0 - 5
5E15 and later: 0 - 11

2.4 * DFI

Description: Enter the Digital Facility Interface pack number.

Required Field.
Valid Entries: 1 - 16

DSX FRAME LOCATION

The combination of the following fields (Section 2.5) -
(Section 2.9) define the DSX FRAME LOCATION and this instance of the EQDSX input form must not be duplicated on any other instance of the EQDSX input form.

Copyright © 2006 Lucent Technologies

2.5 # FLOOR NBR

Description: Enter the DSX frame floor location number.

Required Field.
Valid Entries: 00 - 99, two alphabetic characters, including spaces or 1 character

2.6 # AISLE NBR

Description: Enter the DSX frame aisle location number.

Required Field.
Valid Entries:
000 - 999, or
two or three alphabetic characters, including a space(s)

2.7 # BAY NBR

Description: Enter the DSX frame bay location number.

Required Field.
Valid Entries:
00 - 99, or
two alphabetic characters, including a space

2.8 # PANEL NBR

Description: Enter the DSX panel (plate) location number.

Required Field.
Valid Entries: 00 - 99, or two letters characters form A - J

The combinations of the letters are as follows:

- "E" must be followed by any letter, except "I" or "O"
- "G" must be followed by any letter, except "I" or "O"
- "W" through "Z" or "H" followed by any letter, except "I", "O", or "W" through "Z"
- "H" followed by any letter except "I", "O", or "W" through "Z"
- "J" followed by "A" or "B"

2.9 # JACK POS NBR

Description: Enter the position number within the DSX panel (plate).

Required Field.
Valid Entries: 0 - 999

Copyright © 2006 Lucent Technologies

```
eqdsx                          5ESS Switch            _
(5721)                   OFFICE DATA ADMINISTRATION
                   TOPAS TERMINAL EQUIPMENT DSX ASSIGNMENT

*1. SM           ___
*2. DLTU         _
*3. DFI          __

                   DSX FRAME LOCATION

                   FAC 0       FAC 1
                   -----       -----
    FLOOR NBR    #4. __       9. __
    AISLE NBR    #5. ___     10. ___
    BAY NBR      #6. __      11. __
    PANEL NBR    #7. __      12. __
    JACK POS NBR #8. ___     13. ___
```

Figure 1 SAMPLE TOPAS TERMINAL EQUIPMENT DSX ASSIGNMENT FORM

Copyright © 2006 Lucent Technologies

SEC. 15: 5722 RECORD
REMOTE SITE OPTIONS FORM - EQSITE

1. GENERAL

With 5E4(2) and earlier Generic programs, Remote Modules can be contained in a cluster of 1-4 RSMs (Remote Switching Modules). Each of these clusters is called a Remote Site. For 5E5 and later Software Releases, Remote Site refers to a cluster of 1 to 4 RSMs, a single ORMs (Optically Remote Modules) or a single TRMs (Two-Mile Optically Remote Modules). Collocated ORM/TRMs will consist of multiple single module clusters.

The Stand-Alone call processing options will be applied on a Remote Site basis rather than on an individual Remote Module basis. In 5E5 and later Software Releases, to specify Stand-Alone call processing on a Host (SM USAGE is "HIM" on an EQIM form) or Local Switching Module (SM USAGE is "IM" on an EQIM form), the STAND ALONE field on an EQIM form (5700 Record) must be set to "Y". Additionally, if Stand-Alone billing is desired, the STAND ALONE BILLING field on an EQIM form must be set to "Y".

For 5E4(2) and earlier Software Releases, Remote Site refers to Remote Switching Modules (RSMs). For 5E5 and later Software Releases, Remote Site refers to Remote Switching Modules, Optically Remote Modules or Two-Mile Optically Remote Modules.

Remote Alarm Options for the Master Module can be designated on this form. For more information on Remote Alarm Options, please refer to Division 8, Section 7.

2. FORM ENTRIES

2.1 BASE AND CONTROL, ESS UNIT

Enter the Base and Control Number and Office Name on each record.

2.2 * REMOTE SITE

Description: Enter the identification number of the set of Remote Modules that comprise the Remote Site Cluster.
Valid Entries: 1 - 74

2.3 MASTER MODULE

Description: Enter the Switching Module number of the Master Module of this Remote Site, if one exists.
Valid Entries: 1 - 192

Data Rules:

The MASTER MODULE must be entered when the ALARM INPUT OPTION or the ALARM OUTPUT OPTION is "Y" and the MASTER MODULE must be defined on an EQRAU form (5705 Record).

If an EQRCLK form (5723 Record) exists for a Remote Module of this Remote Site, the RSM entered on the EQRCLK form must match the MASTER MODULE on this form for this Remote Site.

2.4 STAND ALONE PURCHASED?

Description: This field name is available with 5E5 and later Software Releases. If Stand-Alone call processing was purchased for this site, enter "Y". Otherwise enter "N". Caution should be observed when

Copyright © 2006 Lucent Technologies

entering this field because this option may only be set with the ODA process; this is not a Recent Changeable item.

Required Field
Valid Entries: Y - N

Data Rules:

When Stand-Alone is purchased, a Fixed Route Type of "RSMSA" must be defined on a FIXRT form (5301-1 Record).

For more detailed information on Stand-Alone operation, see the RSM Stand-Alone call processing section (Division 2, Section 1C).

2.5 STAND ALONE BILLING PURCHASED?

Description: If Stand-Alone Billing was purchased for this site, enter "Y"; otherwise, enter "N". Caution should be observed when entering this field because this option can only be set by the ODA process. This is not a Recent Changeable item.

Required Field.
Valid Entries: Y - N

Data Rules:

Stand-Alone Billing may only be "Y" if STAND ALONE PURCHASED is also "Y".

For more detailed information on Stand-Alone operation, see the RSM Stand-Alone call processing section (Division 2, Section 1C).

2.6 ALARM INPUT OPTION

Description: If the REMOTE SITE has the ALARM INPUT OPTION, enter "Y "; otherwise, enter "N".

Required Field.
Valid Entries: Y - N

Data Rules:

If this field is "Y", an entry in the MASTER MODULE field is required.

For more detailed information on the ALARM INPUT OPTION, see Division 3, Section 5P.

2.7 ALARM OUTPUT OPTION

Description: If the REMOTE SITE has the ALARM OUTUT OPTION, enter "Y"; otherwise, enter "N".

Required Field.
Valid Entries: Y - N

Data Rules:

If this field is "Y", an entry in the MASTER MODULE field is required.

For more detailed information on the ALARM OUTPUT OPTION, see Division 3, Section 5P.

Copyright © 2006 Lucent Technologies

2.8 ALARM AUDIBLE TIMING

Description: If the REMOTE SITE has the ALARM OUTPUT OPTION, enter the Remote Alarm Audible Timing in seconds.
Valid Entries: 5 - 300 (seconds)

Data Rules:

If ALARM OUTPUT OPTION is "Y", this entry is required. If ALARM OUTPUT OPTION is "N", this field must not be entered.

2.9 ALARM OUTPUT SITE

Description: This field is only applicable to collocated ORMs or TRMs that are sharing the RAU (Remote Alarm Unit) of another collocated ORM/TRM. This field is populated in the collocated ORM/TRM not equipped with the RAU. Enter the ORM/TRM Remote Site where remote alarms from this Remote Site will be routed to. Valid entries are 1 to 174. The input value must represent an ORM or TRM Remote Site with the Remote Alarm Unit assigned.
Valid Entries: 1 - 174

Data Rules:

ALARM OUTPUT SITE must not equal REMOTE SITE.

ALARM OUTPUT SITE must be left blank if ALARM INPUT OPTION IS "Y" or ALARM OUTPUT OPTION IS "Y".

ALARM OUTPUT SITE, if entered, must be defined in the REMOTE SITE field on an EQIM form where SM USAGE is "ORM" or "TRM".

ALARM OUTPUT SITE, if entered, must be defined in the REMOTE SITE field on another EQSITE form where MASTER MODULE is entered.

2.10 REMARK

Description: This field may be used for any descriptive comment which consists of alphanumerics, blanks, or special characters.

```
eqsite                          5ESS Switch            _
(5722)                    OFFICE DATA ADMINISTRATION
                             REMOTE SITE OPTIONS


* 1. REMOTE SITE ___

  2. MASTER MODULE                    ___
  3. STAND ALONE PURCHASED?           _
  4. STAND ALONE BILLING PURCHASED?   _
  5. ALARM INPUT OPTION               _
  6. ALARM OUTPUT OPTION              _
```

Copyright © 2006 Lucent Technologies

```
7. ALARM AUDIBLE TIMING          ___
8. ALARM OUTPUT SITE             ___
9. REMARK  _______________
```

Figure 1 SAMPLE REMOTE SITE OPTIONS FORM 5E8 AND LATER SOFTWARE RELEASES

Copyright © 2006 Lucent Technologies

SEC. 16: 5723-1/2 RECORD
REMOTE CLOCK DATA FORM (EQRCLK)

1. GENERAL

The RCU (Remote Clock Unit) is available with 5E2 and later Software Releases. It is an option of Multi-module Remote Switching Module Sites. The RCU meets the timing requirements for carrying data over digital trunks. These trunks, for example, might connect the RSM to another digital switch. Error free transmission of data over digital trunks requires that both switches be synchronized. The RCU for Multi-module RSMs provides the means for keeping the RSM Site synchronized during periods of stand-alone operation.

1.1 Recent Change View

The corresponding Recent Change View for this form is 20.11.

2. FORM AND RECORD ENTRIES

2.1 BASE AND CONTROL, ESS UNIT

Enter the Base and Control Number and Office Name on each record.

2.2 *RSM

Description: Enter the number of the Remote Switching Module where the RSM is physically located. This must be the Master Module of the RSM Site.

Required Field.
Valid Entries: 1 - 192

Data Rules:

The RSM must also be defined on exactly two RCLKREF (5519 Record) forms with REFERENCE set to 1 and REFERENCE set to 2, respectively.

2.3 CLOCK TYPE

Description: Enter the type of clock.

Required Field.

Valid CLOCK TYPE Entries

Entry	Definition
24CHAN2	24-channel domestic clock.
STDALNE2	Stand-alone.

2.4 OSCILLATOR TYPE

Description: Enter the type of oscillator.

Required Field.
Default: DOMMED
Valid Entries:

Copyright © 2006 Lucent Technologies

Valid OSCILLATOR TYPE Entries	
Entry	**Definition**
DOMMED	Medium stability; typically used for local offices.
DOMHI	High stability; typically used for toll applications.

Data Rules:

For 5E3 and later, the only valid entry is "DOMMED".

2.5 CLOCK CLI

Description: Enter the Change Level Indicator.

Required Field.
Valid Entries: 0 - 7ffffffff (hexadecimal)

For a complete listing of valid CLI values, J-Drawing and list combinations, see Division 8, Section 1.

2.6 EQPT STATUS

Description: Enter the status of the RCU. For new offices and units destined for factory testing, "O" is the only allowed value. During off-line ODA database retrofits, the other values are valid.

Required Field.

Valid EQPT STATUS Entries	
Entry	**Definition**
U	Unequipped.
G	Growth.
O	Operational.

2.7 EQPT BAY

Description: Enter the Equipment location Bay.

Required Field.
Valid Entries: 0 - 4

Data Rules:

If 1 is entered, UNIT TYPE on the EQIM form (5700 Record) must be "MCTU3", "SMPU3", "SMPU4", or an SM-2000 class processor.

2.8 EQPT UN VERT

Description: Enter the Equipment Vertical location that specifies the bottom of the Unit.

Valid EQPT UN VERT Entries	
Entry	**Definition**
22,30,39,48,56,65,74	7 foot cabinets.
15,24,32,41,49,58	6 foot cabinets.

2.9 EQPT AISLE

Description: Enter the Equipment Aisle location. This entry consists of a floor and aisle number. The first and second digits are the floor number. The valid range for floor number is 00 - 99. The last two digits are the aisle number. The valid range for aisle number is 00 - 99. It is recommended that floor 00 be used for

Copyright © 2006 Lucent Technologies

equipment located basement per floor plan designation.

Required Field.
Valid Entries: 0000-9999

2.10 INTF UNIT

Description: The Interface Unit field is a Recent Change only field. This field was added to support the 5E15 Optically Extended Control and Data Unit feature. See Division 2, Section 9V.
Valid Entries: 0 -8

Data Rules:

When INTF UNIT is greater than 0, it must be defined on the EQXCDU form (5853 Record) for the same Switching Module. In addition, the EQSTAT value on the EQCI must not exceed the MOD CTL SG0/1 EQSTAT on the EQXCDU form. (EQSTAT of "O" is greater than EQSTAT of "G", and EQSTAT of "G" is greater than EQSTAT of "U".)

2.11 CONT GRP SIDE 0

Description: Enter the Control Group number.

Required Field.
Valid Entries: 0 - 1

Data Rules:

CONTROL GROUP numbers assigned on the following forms must be defined as CI on an EQCI form: EQDCTU (5751 Record), EQDCLU (5810 Record), EQDS (5740 Record), EQDSC3 (5852 Record), EQDUP (5730-2), EQGDSC3 (5860 Record), EQIDCU (5846 Record), EQISLU (5731 Record), EQISTF (5823 Record), EQLU (5710 Record), EQPSU (5741 Record), EQRA (5821 Record), EQTU (5720 Record), EQFIU (5753 Record), EQMSU (5750 Record), EQRCLK (5723 Record). Furthermore, the EQSTAT on the matching EQCI form must be greater than or equal to the equipment status value on the equipment form (i.e., "O"' is greater than "G" which is greater than "U").

2.12 CONT PORT SIDE 0

Description: Enter the Control Port number.

Required Field.
Valid Entries: 0 - 22.

Data Rules:

The control group and control port combination must be unique for the two sides of the clock.

Control Port assignments cannot be duplicated on the following forms: EQDCTU (5751 Record), EQDCLU (5810 Record), EQDS (5740 Record), EQDSC3 (5852 Record), EQDUP (5730-2), EQGDSC3 (5860 Record), EQIDCU (5846 Record), EQISLU (5731 Record), EQRISLU (5732 Record), EQISTF (5823 Record), EQLU (5710 Record), EQPSU (5741 Record), EQRA (5821 Record), EQTU (5720 Record), EQFIU (5753 Record), EQMSU (5750 Record), EQRCLK (5723 Record).

For 5E12 and later, for the EQAIU, EQIDCU, EQISLU, EQRISLU and EQPSU forms, two control ports are assigned based on the Control Port entered on the form. The first is the Control Port entered on the form, the

Copyright © 2006 Lucent Technologies

second Control Port is one plus the Control Port entered on the form. Non-SM-2000 class processors reserve Control Group/Control Port 0/0 and 0/1 for the Local Digital Service unit. No other unit may specify Control Group/Control Port 0/0 or 0/1 for non-SM-2000 class processors. Non-SM-2000 class processors reserve Control Group/Control Port 0/0 and 0/1 for the Local Digital Service unit. No other unit may specify Control Group/Control Port 0/0 or 0/1 for non-SM-2000 class processors.

2.13 CONT GRP SIDE 1

Description: Enter the Control Group number.

Required Field.
Valid Entries: 0 - 1

2.14 CONT PORT SIDE 1

Description: Enter the Control Port number.

Required Field.
Valid Entries: 0 - 22

Data Rules:

The control group and control port combination must be unique for the two sides of the clock.

SIDE 0 PRIMARY (MSU SG 0) POINTS

The following fields (Section 2.15 - Section 2.23) define the primary scan and distribute points assignments for Service Group 0. The formats of the scan and distribute point numbers are provided in the tables below.

SCAN POINT NUMBER

Equipment		Format	Valid Entries
Switching Module	SM	XXX	1-192
Metallic Service Unit	MSU/MMSU		0-1
Service Group	SVG	X	0-1
Board	BRD	XX	00-15 (Regular MSU)
			00-31 (Modular MSU)
Scan Point Number	DPN	XX	00-30

DISTRIBUTE POINT NUMBER

Equipment		Format	Valid Entries
Switching Module	SM	XXX	1-192
Metallic Service Unit	MSU/MMSU		0-1
Service Group	SVG	X	0-1
Board	BRD	XX	00-15 (Regular MSU)
			00-31 (Modular MSU)
Distribute Point Number	DPN	XX	00-31

2.15 CLK PWR W SP

Description: Enter the scan point assignment for SIDE 0 CLOCK POWER W. This point must be assigned on Service Group 0 of the MSU/MMSU.

Copyright © 2006 Lucent Technologies

Required Field.
Valid Entries: (See Scan Point Table above)

2.16 CLK PWR Y SP

Description: Enter the scan point assignment for SIDE 0 CLOCK POWER Y. This point must be assigned on Service Group 0 of the MSU/MMSU.

Required Field.
Valid Entries: (See Scan Point Table above)

2.17 CLK MAN OVERRIDE SP

Description: Enter the scan point assignment for SIDE 0 CLOCK MANUAL OVERRIDE. This point must be assigned on Service Group 0 of the MSU/MMSU.

Required Field.
Valid Entries: (See Scan Point Table above)

2.18 CLK REQ OOS SP

Description: Enter the scan point assignment for SIDE 0 CLOCK REQUEST OUT OF SERVICE. This point must be assigned on Service Group 0 of the MSU/MMSU.

Required Field.
Valid Entries: (See Scan Point Table above)

2.19 OSC X PWR SP

Description: Enter the scan point assignment for SIDE 0 OSCILLATOR X POWER. This point must be assigned on Service Group 0 of the MSU/MMSU.

Required Field.
Valid Entries: (See Scan Point Table above)

2.20 OSC Y PWR SP

Description: Enter the scan point assignment for SIDE 0 OSCILLATOR Y POWER. This point must be assigned on Service Group 0 of the MSU/MMSU.

Required Field.
Valid Entries: (See Scan Point Table above)

2.21 CLK OUT OF SERV DP

Description: Enter the distribute point assignment for SIDE 0 CLOCK OUT OF SERVICE. This point must be assigned on Service Group 0 of the MSU/MMSU.

2.22 CLK REQ IN PROG DP

Description: Enter the distribute point assignment for SIDE 0 CLOCK REQUEST IN PROGRESS. This point must be assigned on Service Group 0 of the MSU/MMSU.

Copyright © 2006 Lucent Technologies

Required Field.
Valid Entries: (See Distribute Point Table above)

2.23 OSC OUT OF SERV DP

Description: Enter the distribute point assignment for SIDE 0 OSCILLATOR OUT OF SERVICE. This point must be assigned on Service Group 0 of the MSU/MMSU.

Required Field.
Valid Entries: (See Distribute Point Table above)

SIDE 1 PRIMARY (MSU SG 0) POINTS

The following fields (Section 2.24 - Section 2.32) define the primary scan and distribute points assigned to Service Group 0 of their Metallic Service Unit.

2.24 CLK PWR W SP

Description: Enter the scan point assignment for SIDE 1 CLOCK POWER W. This point must be assigned on Service Group 0 of the MSU.

Required Field.
Valid Entries: (See Scan Point Table above)

2.25 CLK PWR Y SP

Description: Enter the scan point assignment for SIDE 1 CLOCK POWER Y. This point must be assigned on Service Group 0 of the MSU/MMSU.

Required Field.
Valid Entries: (See Scan Point Table above)

2.26 CLK MAN OVERRIDE SP

Description: Enter the scan point assignment for SIDE 1 CLOCK MANUAL OVERRIDE. This point must be assigned on Service Group 0 of the MSU/MMSU.

Required Field.
Valid Entries: (See Scan Point Table above)

2.27 CLK REQ OOS SP

Description: Enter the scan point assignment for SIDE 1 CLOCK REQUEST OUT OF SERVICE. This point must be assigned on Service Group 0 of the MSU/MMSU.

Required Field.
Valid Entries: (See Scan Point Table above)

2.28 OSC X PWR SP

Description: Enter the scan point assignment for SIDE 1 OSCILLATOR X POWER. This point must be assigned on Service Group 0 of the MSU/MMSU.

Copyright © 2006 Lucent Technologies

2.29 OSC Y PWR SP

Description: Enter the scan point assignment for SIDE 1 OSCILLATOR Y POWER. This point must be assigned on Service Group 0 of the MSU/MMSU.

Required Field.
Valid Entries: (See Scan Point Table above)

2.30 CLK OUT OF SERV DP

Description: Enter the distribute point assignment for SIDE 1 CLOCK OUT OF SERVICE. This point must be assigned on Service Group 0 of the MSU/MMSU.

Required Field.
Valid Entries: (See Distribute Point Table above)

2.31 CLK REQ IN PROG DP

Description: Enter the distribute point assignment for SIDE 1 CLOCK REQUEST IN PROGRESS. This point must be assigned on Service Group 0 of the MSU/MMSU.

Required Field.
Valid Entries: (See Distribute Point Table above)

2.32 OSC OUT OF SERV DP

Description: Enter the distribute point assignment for SIDE 1 OSCILLATOR OUT OF SERVICE. This point must be assigned on Service Group 0 of the MSU/MMSU.

Required Field.
Valid Entries: (See Distribute Point Table above)

SIDE 0 DUPLEX (MSU SG 1) POINTS

The following fields (Section 2.33 - Section 2.41) define the duplex scan and distribute points assigned to Duplex Service Group 1 of the Metallic Service Unit.

Required Field.

2.33 CLK PWR W SP

Description: Enter the scan point assignment for SIDE 0 CLOCK POWER W. This point must be assigned on Service Group 1 of the MSU.

Required Field.
Valid Entries: (See Scan Point Table above)

2.34 CLK PWR Y SP

Description: Enter the scan point assignment for SIDE 0 CLOCK POWER Y. This point must be assigned on Service Group 1 of the MSU/MMSU.

Required Field.

Copyright © 2006 Lucent Technologies

Valid Entries: (See Scan Point Table above)

2.35 CLK MAN OVERRIDE SP

Description: Enter the scan point assignment for SIDE 0 CLOCK MANUAL OVERRIDE. This point must be assigned on Service Group 1 of the MSU/MMSU.

Required Field.
Valid Entries: (See Scan Point Table above)

2.36 CLK REQ OOS SP

Description: Enter the scan point assignment for SIDE 0 CLOCK REQUEST OUT OF SERVICE. This point must be assigned on Service Group 1 of the MSU/MMSU.

Required Field.
Valid Entries: (See Scan Point Table above)

2.37 OSC X PWR SP

Description: Enter the scan point assignment for SIDE 0 OSCILLATOR X POWER. This point must be assigned on Service Group 1 of the MSU/MMSU.

Required Field.
Valid Entries: (See Scan Point Table above)

2.38 OSC Y PWR SP

Description: Enter the scan point assignment for SIDE 0 OSCILLATOR Y POWER. This point must be assigned on Service Group 1 of the MSU/MMSU.

Required Field.
Valid Entries: (See Scan Point Table above)

2.39 CLK OUT OF SERV DP

Description: Enter the distribute point assignment for SIDE 0 CLOCK OUT OF SERVICE. This point must be assigned on Service Group 1 of the MSU/MMSU.

Required Field.
Valid Entries: (See Distribute Point Table above)

2.40 CLK REQ IN PROG DP

Description: Enter the distribute point assignment for SIDE 0 CLOCK REQUEST IN PROGRESS. This point must be assigned on Service Group 1 of the MSU/MMSU.

Required Field.
Valid Entries: (See Distribute Point Table above)

2.41 OSC OUT OF SERV DP

Description: Enter the distribute point assignment for SIDE 0 OSCILLATOR OUT OF SERVICE. This point

Copyright © 2006 Lucent Technologies

must be assigned on Service Group 1 of the MSU/MMSU.

Required Field.
Valid Entries: (See Distribute Point Table above)

SIDE 1 DUPLEX (MSU SG 1) POINTS

The following fields (Section 2.42 - Section 2.50) define the primary scan and distribute points assignments for Service Group 1 of their Metallic Service Unit.

2.42 CLK PWR W SP

Description: Enter the scan point assignment for SIDE 1 CLOCK POWER W. This point must be assigned on Service Group 1 of the MSU.

Required Field.
Valid Entries: (See Scan Point Table above)

2.43 CLK PWR Y SP

Description: Enter the scan point assignment for SIDE 1 CLOCK POWER Y. This point must be assigned on Service Group 1 of the MSU/MMSU.

Required Field.
Valid Entries: (See Scan Point Table above)

2.44 CLK MAN OVERRIDE SP

Description: Enter the scan point assignment for SIDE 1 CLOCK MANUAL OVERRIDE. This point must be assigned on Service Group 1 of the MSU/MMSU.

Required Field.
Valid Entries: (See Scan Point Table above)

2.45 CLK REQ OOS SP

Description: Enter the scan point assignment for SIDE 1 CLOCK REQUEST OUT OF SERVICE. This point must be assigned on Service Group 1 of the MSU/MMSU.

Required Field.
Valid Entries: (See Scan Point Table above)

2.46 OSC X PWR SP

Description: Enter the scan point assignment for SIDE 1 OSCILLATOR X POWER. This point must be assigned on Service Group 1 of the MSU/MMSU.

Required Field.
Valid Entries: (See Scan Point Table above)

2.47 OSC Y PWR SP

Description: Enter the scan point assignment for SIDE 1 OSCILLATOR Y POWER. This point must be

Copyright © 2006 Lucent Technologies

assigned on Service Group 1 of the MSU/MMSU.

Required Field.
Valid Entries: (See Scan Point Table above)

2.48 CLK OUT OF SERV DP

Description: Enter the distribute point assignment for SIDE 1 CLOCK OUT OF SERVICE. This point must be assigned on Service Group 1 of the MSU/MMSU.

Required Field.
Valid Entries: (See Distribute Point Table above)

2.49 CLK REQ IN PROG DP

Description: Enter the distribute point assignment for SIDE 1 CLOCK REQUEST IN PROGRESS. This point must be assigned on Service Group 1 of MSU/MMSU.

Required Field.
Valid Entries: (See Distribute Point Table above)

2.50 OSC OUT OF SERV DP

Description: Enter the distribute point assignment for SIDE 1 OSCILLATOR OUT OF SERVICE. This point must be assigned on Service Group 1 of the MSU/MMSU.

Required Field.
Valid Entries: (See Distribute Point Table above)

```
eqrclk                          5ESS Switch
(5723-1/2)                OFFICE DATA ADMINISTRATION
SCREEN 1 OF 2                 REMOTE CLOCK DATA

 * 1. RSM                  010           7. EQPT UN VERT        15
   2. CLOCK TYPE           24CHAN2       8. EQPT AISLE          0001
   3. OSCILLATOR TYPE      DOMMED        9. CONT GRP SIDE 0     0
   4. CLOCK CLI            00000001     10. CONT PORT SIDE 0    02
   5. EQPT STATUS          O            11. CONT GRP SIDE 1     1
   6. EQPT BAY             0            12. CONT PORT SIDE 1    01

 SIDE 0 PRIMARY (MSU SG 0) POINTS           SIDE 1 PRIMARY (MSU SG 0) POINTS
  13. CLK PWR W SP         010000000    22. CLK PWR W SP        010000009
  14. CLK PWR Y SP         010000001    23. CLK PWR Y SP        010000010
  15. CLK MAN OVERRIDE SP  010000002    24. CLK MAN OVERRIDE SP 010000011
  16. CLK REQ OOS SP       010000003    25. CLK REQ OOS SP      010000012
  17. OSC X PWR SP         010000004    26. OSC X PWR SP        010000013
  18. OSC Y PWR SP         010000005    27. OSC Y PWR SP        010000014
  19. CLK OUT OF SERV DP   010000006    28. CLK OUT OF SERV DP  010000015
  20. CLK REQ IN PROG DP   010000007    29. CLK REQ IN PROG DP  010000016
  21. OSC OUT OF SERV DP   010000008    30. OSC OUT OF SERV DP  010000017
```

Copyright © 2006 Lucent Technologies

```
eqrclk                          5ESS Switch            _
(5723-1/2)                OFFICE DATA ADMINISTRATION
SCREEN 2 OF 2                 REMOTE CLOCK DATA

 SIDE 0 DUPLEX (MSU SG 1) POINTS         SIDE 1 DUPLEX (MSU SG 1) POINTS

  31. CLK PWR W SP        010010000     40. CLK PWR W SP        010010009
  32. CLK PWR Y SP        010010001     41. CLK PWR Y SP        010010010
  33. CLK MAN OVERRIDE SP 010010002     42. CLK MAN OVERRIDE SP 010010011
  34. CLK REQ OOS SP      010010003     43. CLK REQ OOS SP      010010012
  35. OSC X PWR SP        010010004     44. OSC X PWR SP        010010013
  36. OSC Y PWR SP        010010005     45. OSC Y PWR SP        010010014
  37. CLK OUT OF SERV DP  010010006     46. CLK OUT OF SERV DP  010010015
  38. CLK REQ IN PROG DP  010010007     47. CLK REQ IN PROG DP  010010016
  39. OSC OUT OF SERV DP  010010008     48. OSC OUT OF SERV DP  010010017
```

Figure 1 SAMPLE EQRCLK FORM 5E14 AND EARLIER SOFTWARE RELEASES

```
eqrclk                          5ESS Switch
SCREEN 1 OF 3             OFFICE DATA ADMINISTRATION
(5723-1/2)                     REMOTE CLOCK DATA

*1. RSM             ___               INTF UNIT        0
#2. CLOCK TYPE      ________     #10. CONT GRP SIDE 0  _
 3. OSCILLATOR TYPE DOMMED       #11. CONT PORT SIDE 0 __
#4. CLOCK CLI       ________     #12. CONT GRP SIDE 1  _
#5. EQPT STATUS     _            #13. CONT PORT SIDE 1 __
#6. EQPT BAY        _
#7. EQPT UN VERT    __
#8. EQPT AISLE      ____
```

```
eqrclk                          5ESS Switch
SCREEN 2 OF 3             OFFICE DATA ADMINISTRATION
(5723-1/2)                     REMOTE CLOCK DATA

 SIDE 0 PRIMARY (MSU SG 0) POINTS      SIDE 1 PRIMARY (MSU SG 0) POINTS
#14. CLK PWR W SP        _________    #23. CLK PWR W SP        _________
#15. CLK PWR Y SP        _________    #24. CLK PWR Y SP        _________
#16. CLK MAN OVERRIDE SP _________    #25. CLK MAN OVERRIDE SP _________
#17. CLK REQ OOS SP      _________    #26. CLK REQ OOS SP      _________
#18. OSC X PWR SP        _________    #27. OSC X PWR SP        _________
#19. OSC Y PWR SP        _________    #28. OSC Y PWR SP        _________
#20. CLK OUT OF SERV DP  _________    #29. CLK OUT OF SERV DP  _________
#21. CLK REQ IN PROG DP  _________    #30. CLK REQ IN PROG DP  _________
#22. OSC OUT OF SERV DP  _________    #31. OSC OUT OF SERV DP  _________
```

Copyright © 2006 Lucent Technologies

```
eqrclk                          5ESS Switch          _
SCREEN 3 OF 3             OFFICE DATA ADMINISTRATION
(5723-1/2)                     REMOTE CLOCK DATA

  SIDE 0 DUPLEX (MSU SG 1) POINTS       SIDE 1 DUPLEX (MSU SG 1) POINTS
#32. CLK PWR W SP        __________    #41. CLK PWR W SP        __________
#33. CLK PWR Y SP        __________    #42. CLK PWR Y SP        __________
#34. CLK MAN OVERRIDE SP __________    #43. CLK MAN OVERRIDE SP __________
#35. CLK REQ OOS SP      __________    #44. CLK REQ OOS SP      __________
#36. OSC X PWR SP        __________    #45. OSC X PWR SP        __________
#37. OSC Y PWR SP        __________    #46. OSC Y PWR SP        __________
#38. CLK OUT OF SERV DP  __________    #47. CLK OUT OF SERV DP  __________
#39. CLK REQ IN PROG DP  __________    #48. CLK REQ IN PROG DP  __________
#40. OSC OUT OF SERV DP  __________    #49. OSC OUT OF SERV DP  __________
```

Figure 2 SAMPLE EQRCLK FORM 5E15 AND LATER SOFTWARE RELEASES

Copyright © 2006 Lucent Technologies

SEC. 17: 5730-1/2/3/4/5 RECORD
DIGITAL LINE/TRUNK UNIT EQUIPAGE FORM - EQDU
DIGITAL LINE/TRUNK UNIT PACK EQUIPAGE FORM - EQDUP

1. GENERAL

For 5E5 and later, the 5730 Record was split into two records: 5730-1 for the EQDU form and 5730-2 for the EQDUP form. These forms are used to define equipment location information for the Digital Line/Trunk Units.

The Digital Line/Trunk Unit Record is used to define the Switching Module, Digital Line/Trunk Units, and the Digital Facility Interface Pack Number.

For 5E5 and later, a DFI-2 (Digital Facility Interface-2) is available. The DFI-2 allows two T1 lines to terminate on the DLTU2 (Digital Line and Trunk Unit-2). The two T1 lines are specified as Facility 0 and Facility 1 on the EQDUP form. Facility 0 utilizes channels 1 to 24. Facility 1 utilizes channels 25 to 48. For 5E8 and later, DFI-2 PM GRP was added to provide performance monitoring capability for DFI-2 facilities. For more information on the performance monitoring for DFI-2, see the PMTHRESH form (5948 Record).

1.1 Carrier Group Alarm Hash Indexes

TheCGA (Carrier Group Alarm) data is associated with the VT/DS1 and STE/STS facilities. For 5E9(2) and later, only 522 hash indexes are available per switching module. One hash index is allocated to each instance of the following for a specific SM:

- 1 per each pair STE/STS on a specified SM (EQSTE form). (The EQSTE form is associated with the DNU-S.)
- 1 per each VT (Virtual Tributary) on a specified SM (EQVT form). (The EQVT form is associated with the DNU-S.)
- 1 per each DFI (Digital Facility Interface) of a DLTU (Digital Line/Trunk Unit) where FAC IND is 0 or 1, and DFI TYPE is not "H1" or "H2", i.e., DFI USAGE of "H1" and "H2" are not counted (EQDUP form). (The EQDUP form is associated with DLTU.)
- 1 per each DFI-2 (2 per EQDUP form) where FAC IND is 3. (The EQDUP form is associated with DLTU.)
- 1 per pack - POS, EQST, CLI, CLEI combination. (30 packs per DCLU on EQDCLP form) (The EQDCLP form is associated with DCLU.)
- 1 per IFAC - EQSTAT, SUP MTHD, PUB43801 combination. (20 per IDCU on the EQIFAC form) (The EQIFAC form is associated with IDCU.)

1.2 Recent Change View

The corresponding Recent Change Views for this form are 19.4 and 20.4

2. FORM ENTRIES - EQDU FORM
5730-1 RECORD

2.1 BASE AND CONTROL, ESS UNIT

Enter the Base and Control Number and the Office Name on each record.

Copyright © 2006 Lucent Technologies

2.2 * SM

Description: Enter the Switching Module number.
Valid Entries: 1 - 192

Data Rules:

For 5E8 and later, each Switching Module (which is not an SM-2000 class processor) has 512 TS (Time Slots) available for variousfunctions. Some of these 512 are available on call and some are reserved.

- At least two TS are always required in each SM, one for audible ring and one for idle code.
- In DSN (Defense Switched Network) offices, at least three TS are always required in each SM, one for audible ring, one for precedence audible ring and one for idle code. SMs cannot have more than 509 time slots assigned to equipment.
- Each of the forms listed below may utilize a number of initialized time slots. These TS should NOT be shared with any other applications.
  - EQDCLU - Digital Carrier Line Unit Equipage Form
  - EQDSP - Digital Service Unit Pack Equipage Form
  - EQDUP - Digital Line/Trunk Unit Pack Equipage Form
  - EQIDCU - Integrated Digital Carrier Unit Equipage Form
  - EQISLU - Integrated Services Line Unit Equipage Form
  - EQISTF - Integrated Services Test Function Form
  - EQLU - Line Unit Equipage Form
  - EQPSU - Packet Switching Unit Equipage Form
  - EQRA - Recorded Announcement Function Common Circuit & Services Form
  - EQTUP - Trunk Unit Pack Equipage Form

For 5E9(2) and later, when the SM value matches the SM value on an EQIM form with an SM-2000 class processor UNIT TYPE , DLTU TYPE must be "DLTU48".

When the SM value matches the SM value on an EQIM form with an SM-2000 UNIT TYPE, and if DFI USAGE for FAC 0 or Fac 1 is entered on the EQDUP form, the value of the DFI USAGE must be "TRUNK" or "HOST" (for 5E10 and later).

For 5E10 and later, when XAT forms have an OE TYPE of "D" and an OE entered, indicating a DEN(s) assignment, and the CHAN for this DEN is greater than 24 (OE[7,8]) a DIGITAL LINE/TRUNK UNIT TYPE of "DLTU48" on the corresponding EQDU form is required.

2.3 * DLTU NUMBER

Copyright © 2006 Lucent Technologies

Description: Enter the Digital Line/Trunk Unit Number.
Valid Entries:

5E14 and earlier: 0 - 5
5E15 and later: 0 - 11

2.4 # DLTU TYPE

Description: Enter the Digital Line/Trunk Unit Type.

Software Release: 5E3 and later
Required Field.
Valid Entries:

Valid DLTU TYPE Entries

Entry	Definition
DLTU24	DLTU with 10 DFIs.
DLTURH	Remote Integrated Services Line Unit DLTU with 16 DFIs.
DLTU48	Software Release: 5E5 and later. DLTU2 with 10 DFI2s.

Data Rules:

For 5E8 and later, when DLTU TYPE is "DLTU24" or "DLTU48" and the corresponding TKGRP form has:
TRKCLS of "EDSL", "IFOPER", or "IFTERM",
INPULSING or OUTPULSING of "DCHN",
TRK DIR of "2W", "INC", or "OUT",
ASP ALW of "N",

then DATA RATE on the TKGRP form must be "56K", "R64K", "64K", or must not be entered.

For 5E8 and later, when DLTU TYPE is "DLTU24" or "DLTU48" and the corresponding TKGRP form has:
TRKCLS of "EDSL", "IFOPER", or "IFTERM",
INPULSING or OUTPULSING of "DCHN",
TRK DIR of "SGNL",
ASP ALW of "N",

then DATA RATE on the TKGRP form must be entered.

For 5E8 and later, when DLTU TYPE is "DLTU24" or "DLTU48" and the corresponding TKGRP form has:
TRKCLS of "EDSL", "IFOPER", or "IFTERM",
INPULSING or OUTPULSING of "DCHN",
TRK DIR of "2W", "INC", or "OUT"
ASP ALW of "Y",

then DATA RATE on the TKGRP form must not be entered.

For 5E9(2) and later, a DLTU on an SM-2000 class processor must be a DLTU2; DLTU TYPE must be "DLTU48".

For 5E9(2) and later, when DLTU TYPE is "DLTU24" or "DLTU48", OUTPULSING on the corresponding TKGRP form must not be equal to "RPTO".

When DLTU TYPE is "DLTU48", CBL SERIES and CBL DISTANCE must be entered.

Copyright © 2006 Lucent Technologies

2.5 # EQUIPMENT BAY

Description: Enter the Equipment Bay location number.

Required Field.
Valid Entries:
5E9(1) and earlier: 0 - 4
5E9(2) and later: 0 - 208

Valid EQLBAY Entries, 5E9(2) and later

Entry	Definition
0 - 4	Switching Module (non-SM-2000).
0 - 14	SM-2000; SM Cabinent aisle.
100 - 104	SM-2000; Back panel; wiring position.
200 - 208	SM-2000; Front panel; door position.

2.6 # EQUIPMENT UNIT VERTICAL

Description: Enter the Vertical Equipment location that specifies the bottom of the unit. Recommended values are based on cabinet type:

5E9(1) and earlier:
For 7-foot cabinets: 22, 30, 39, 48, 56, 65, 74
For 6-foot cabinets: 15, 24, 32, 41, 49, 58

For 5E9(2) and later:
For 7-foot cabinets: 22, 30, 39, 48, 56, 65, 74
For 6-foot cabinets: 7, 15, 24, 32, 41, 49, 58

Required Field.
Valid Entries: 0 - 84

2.7 # EQUIPMENT AISLE

Description: Enter the Equipment Aisle, consisting of a floor and aisle number.

The first and second digits from the left are the floor number. Valid floor numbers are 00 - 99. It is recommended that floor 00 be used for equipment located in the basement per floor plan designation.

The third and fourth digits are the aisle number. Valid aisle numbers are 00 - 99.

Required Field.
Valid Entries: 0000 - 9999

2.8 CSU

Description: Is DLTU located on a Combined Services Unit? For more information on the Combined Services Unit feature, see Division 2, Section 7F.

Software Release: 5E10 and later
Required Field.
Default Value: N

Copyright © 2006 Lucent Technologies

Valid Entries: Y, N

Data Rules:
When CSU is "Y", DLTU TYPE must be "DLTU48".

When an EQDU form is entered with CSU set to "Y", no other EQDU form may be entered on the same SM that also has CSU set to "Y".

When an EQDU form is entered with CSU set to "Y", all corresponding EQDUP forms with matching SM and DLTU values must have DFI PACK NBR less than 6.

For an SM with a CSU (Combined Services Unit), all equipment assignments for the CSU on that SM must specify the same combination of AISLE, BAY, VERT POS values. Therefore, the EQDU, EQGDSC3, EQMSU, or EQRA forms which have CSU set to "Y" must have equipment assignments that specify one location for the same CSU on a particular SM.

2.9 CBL SERIES

Descrition: Indicate the series type of cable between the DLTU2 and the DSX (Digital Cross Connect Bay).

Data Rules:
This field can only be entered when DLTU TYPE is "DLTU48".

When CBL SERIES is "1249S", CBL DISTANCE must be 0 - 450.

When CBL SERIES and/or CBL DISTANCE are entered, DLTU TYPE must be "DLTU48".

2.10 CBL DISTANCE

Description: Enter the distance between the DLTU2 and the DSX (Digital Cross Connect Bay). This distance is measured from the center of the DSX bay to the center of the DLTU2 shelf.

Software Release: 5E5 and later
Valid Entries: 0 - 650 (feet)

Data Rules:

This field can only be entered when DLTU TYPE is "DLTU48".

3. FORM ENTRIES - EQDUP FORM
5730-2/3 RECORD

3.1 * SM

Description: Enter the Switching Module number.
Valid Entries: 1 - 192

Data Rules:

For 5E8 and later, each Switching Module (which is not an SM-2000) has 512 TS (Time Slots) available for variousfunctions. Some of these 512 are available on call and some are reserved.

- At least two TS are always required in each SM, one for audible ring and one for idle code.

Copyright © 2006 Lucent Technologies

- In DSN (Defence Switched Network) offices, at least three TS are always required in each SM, one for audible ring, one for precedence audible ring and one for idle code. SMs cannot have more than 509 time slots assigned to equipment.
- Each of the forms listed below may utilize a number of initialized time slots. These TS should NOT be shared with any other applications.
  - EQDCLU - Digital Carrier Line Unit Equipage Form
  - EQDSP - Digital Service Unit Pack Equipage Form
  - EQDUP - Digital Line/Trunk Unit Pack Equipage Form
  - EQIDCU - Integrated Digital Carrier Unit Equipage Form
  - EQISLU - Integrated Services Line Unit Equipage Form
  - EQISTF - Integrated Services Test Function Form
  - EQLU - Line Unit Equipage Form
  - EQPSU - Packet Switching Unit Equipage Form
  - EQRA - Recorded Announcement Function Common Circuit & Services Form

EQTUP - Trunk Unit Pack Equipage Form

3.2 * DLTU

Description: Enter the DLTU number.
Valid Entries:

5E14 and earlier: 0 - 5
5E15 and later: 0 - 11

3.3 * DFI PACK NBR

Description: Enter the Digital Facility Interface Pack Number.
Valid Entries: 1 - 16

Data Rules:

(See also the paragraph Section 1.1 on Carrier Group Alarm.)

If DFI USAGE is "H1", DFI PACK NUMBER must be less than 5. If DFI USAGE is "H2", DFI PACK NUMBER must be greater than 4. If DFI USAGE is "H1", then this field must be less than 5. If DFI USAGE is "H2", this field must be greater than 4.

If DFI USAGE is "HOST", "TRUNK", "RDFI" or "CDFI", this field must be less than 11.

3.4 FAC IND

Copyright © 2006 Lucent Technologies

Description: Indicate the facility to be used.

For a DFI, the valid entry is 0, which indicates that the DFI can terminate one T1 facility (24 channels) per DLTU circuit pack. This value must be entered when DFI USAGE is "H1" or "H2".

For a DFI-2, the valid entries are 1 and 3. The DFI-2 can terminate two T1 facilities (48 channels) per DLTU2 circuit pack. A value of 1 entered in this field indicates that Facility 0 (channels 1-24) is utilized. A value of 3 indicates that Facility 0 and Facility 1 are utilized. Facility 0 uses channels 1-24 and Facility 1 uses channels 25-48.

Required Field.
Default: 0
Valid Entries: 0, 1 or 3

Data Rules:

For 5E5 and later, on an RSM all Digital Facility Interface packs for umbilicals and/or ICLs (Intra-Cluster Links) must be the same type, i.e. they must all be DFIs or all be DFI-2s. The EQDUP forms with DFI USAGE "RDFI" or "CDFI" for the RSM must all have FAC IND 0 or all have FAC IND 1 or 3.

FAC IND on an SM2000 class processor (UNIT TYPE on the EQIM form is defined as an SM2000 class processor) must be 1 or 3.

For 5E10 and later, if 0 is entered, then the CLI value must be 0, 3, 8, or b.

3.5 INTF UNIT

Description: Enter the Interface Unit number. This field was added to support the 5E15 Optically Extended Control and Data Unit feature. See Division 2, Section 9V.

Required Field.
Valid Entries: 0 - 8

Data Rules:

When INTF UNIT is greater than 0, it must be defined on the EQXCDU form for the same Switching Module. In addition, the EQSTAT value on the EQCI must not exceed the MOD CTL SG0/1 EQSTAT on the EQXCDU form (5853 Record). (EQSTAT of "O" is greater than EQSTAT of "G", and EQSTAT of "G" is greater than EQSTAT of "U".)

The SM/INTF UNIT/DATA GRP combinations entered on this form must be defined on a EQDI form or a EQXCDU form. Also, the EQSTAT on the matching EQDI or EQXCDU form must be greater than or equal to the equipment status value ("O", "G", or "U") on this form (e.g., "O" is greater than "G" which is greater than "U"). Note also that when INTF UNIT is greater than 0 and DATA GRP is 0, these Data Groups are defined on the EQXCDU form.

3.6 # CONTROL GROUP

Description: Enter Control Group Number. For 5E9(2) and later, 0 - 1 is used for SMs; 0 - 3 is used for SM-2000s.

Required Field.
Valid Entries:
5E9(1) and earlier: 0 - 1

Copyright © 2006 Lucent Technologies

5E9(2) and later: 0 - 3

Data Rules:

If the DFI (DFI USAGE of "RDFI") is assigned to DLTU 0, then this field must be 1 when the DFI PACK NBR is 1 - 4.

For 5E9(2) and later, if CONTROL GROUP is 0 for an SM (SM is defined on an EQIM form where UNIT TYPE is not an SM-2000 class processor), CONTROL PORT may not be 0 or 1. These ports are reserved for the LDSU.

For 5E10 and later, CONTROL GROUP/PORT must not equal FAC 0 EC CI or FAC 1 EC CI.

CONTROL GROUP numbers assigned on the following forms must be defined as CI on an EQCI form: EQDCTU (5751 Record), EQDCLU (5810 Record), EQDS (5740 Record), EQDSC3 (5852 Record), EQDUP (5730-2), EQGDSC3 (5860 Record), EQIDCU (5846 Record), EQISLU (5731 Record), EQISTF (5823 Record), EQLU (5710 Record), EQPSU (5741 Record), EQRA (5821 Record), EQTU (5720 Record), EQFIU (5753 Record), EQMSU (5750 Record), EQRCLK (5723 Record). Furthermore, the EQSTAT on the matching EQCI form must be greater than or equal to the equipment status value on the equipment form (i.e., "O"' is greater than "G" which is greater than "U").

3.7 # CONTROL PORT

Description: Enter the Control Port Number.

Required Field.
Valid Entries: 0 - 22

Data Rules:

For an SM (i.e., non-SM-2000), if CONTROL GROUP is 0, this field must not be 0 or 1.

If the DFI (DFI USAGE is "RDFI"), see Figure 2 for required assignments.

For 5E10 and later, CONTROL GROUP/PORT must not equal FAC 0 EC PICB or FAC 1 EC PICB.

Control Port assignments cannot be duplicated on the following forms: EQDCTU (5751 Record), EQDCLU (5810 Record), EQDS (5740 Record), EQDSC3 (5852 Record), EQDUP (5730-2), EQGDSC3 (5860 Record), EQIDCU (5846 Record), EQISLU (5731 Record), EQRISLU (5732 Record), EQISTF (5823 Record), EQLU (5710 Record), EQPSU (5741 Record), EQRA (5821 Record), EQTU (5720 Record), EQFIU (5753 Record), EQMSU (5750 Record), EQRCLK (5723 Record).

For 5E12 and later, for the EQAIU, EQIDCU, EQISLU, EQRISLU and EQPSU forms, two control ports are assigned based on the Control Port entered on the form. The first is the Control Port entered on the form, the second Control Port is one plus the Control Port entered on the form. Non-SM-2000 class processors reserve Control Group/Control Port 0/0 and 0/1 for the Local Digital Service unit. No other unit may specify Control Group/Control Port 0/0 or 0/1 for non-SM-2000 class processors. Non-SM-2000 class processors reserve Control Group/Control Port 0/0 and 0/1 for the Local Digital Service unit. No other unit may specify Control Group/Control Port 0/0 or 0/1 for non-SM-2000 class processors.

3.8 # CLI

Description: Enter the Change Level Indicator.

Copyright © 2006 Lucent Technologies

For a complete listing of valid CLI values, J-Drawing and list combinations, see Division 8, Section 1.

Required Field.
Valid Entries: 0 - 7FFFFFFF

Data Rules:

The correct CLI values when FAC IND is 0 are listed in Division 8, Section 1 for DFI TYPEs "TRUNK", "CDFI", "RDFI", "H1", and "H2", a hexadecimal value of 0, 1, 3, 8 or b.

3.9 CLEI

Description: Enter the Common Language Equipment Identification. See the appropriate J-Drawing for the applicable CLEI codes.

Required Field.
Valid Entries: 10 characters

APT TESTING

The following fields (Section 3.10 - Section 3.11) are added to support the APT (Automatic Progression Testing) Enhancements feature. For more information see, Division 2, Section 2AD.

3.10 ALG FAC 0

Description: This field indicates the algorithm used in APT for the DS1s (Digital Signal Level 1) related to facility 0.

Software Release: 5E16 FR2 and later
Valid Entries:

Valid ALG FAC 0 Entries

Entry	Definition
1ONLY	Test One Only (test one trunk only on the DS1, independently whether test passes or fails and then move to a trunk on another DS1).
FULL	Full (test all trunks on the DS1, independently whether test passes or fails, and then move to a trunk on another DS1).
NOTST	No Test (APT should not perform any tests on the DS1).
SUCC	Stop on Success (test one trunk on the DS1 and then move to a trunk on another DS1 if test passes, or test next trunk on the same DS1 if test fails).

Data Rules:

When ALG FAC 0 is entered, FAC 0 DFI USAGE must be "'TRUNK" and FAC 0 APPL must not be entered.

3.11 ALG FAC 1

Description: This field indicates the algorithm used in APT for the DS1 related to facility 1.

Software Release: 5E16 FR2 and later
Valid Entries:

Valid ALG FAC 1 Entries

Entry	Definition
1ONLY	Test One Only (test one trunk only on the DS1, independently whether test passes or fails and then move to

	a trunk on another DS1).
FULL	Full (test all trunks on the DS1, independently whether test passes or fails, and then move to a trunk on another DS1).
NOTST	No Test (APT should not perform any tests on the DS1).
SUCC	Stop on Success (test one trunk on the DS1 and then move to a trunk on another DS1 if test passes, or test next trunk on the same DS1 if test fails).

Data Rules:

When ALG FAC 1 is entered, FAC 1 DFI USAGE must be "'TRUNK" and FAC 1 APPL must not be entered.

All FAC 1 entries must be blank when FAC IND is 0 or 1.

FAC 0 / FAC 1

The following fields (Section 3.12 - Section 3.23) are used to define up to two T1 facilities. For 5E5 and later, a DFI-2 is available. The DFI-2 allows two T1 lines to terminate on the DLTU2 (Digital Line and Trunk Unit-2). The two T1 lines are specified as Facility 0 and Facility 1 on this form. Facility 0 utilizes channels 1 to 24. Facility 1 utilizes channels 25 to 48.

The FAC 0 column is used for defining a DFI (24 channels) or for defining Facility 0 on a DFI-2. The FAC 1 column is used for defining Facility 1 on a DFI-2.

3.12 DFI USAGE

Description: Enter the DFI Usage. This field is required when FAC 0 or FAC 1 is defined.

Valid DFI USAGE Entries

Entry	Definition
CDFI	The DFI is on an RSM and is providing an ICL (Intra-Cluster Link) to a mate RSM within the same RSM Site.
H1	The DFI is used with RISLU to remote a common control PICB and a TSI PIDB.
H2	The DFI is used with RISLU to remote a TSI PIDB.
HOST	The DFI is on a Host Switching Module and is providing an umbilical from the Host for the RSM.
RDFI	The DFI is on an RSM (Remote Switching Module) and is being used to provide an umbilical from the RSM to the Host Switching Module. See Figure 2 for required RDFI assignments.
TRUNK	The DFI is being used to provide trunk circuits.

Data Rules:

(See also the paragraph Section 1.1 on Carrier Group Alarm.)

CDFI:
For 5E10 and later, if "RDFI" or "CDFI" is entered FAC 0/1 DFI MODE must be "ZCS" or "B8ZS" if FAC IND is 0, 1 or 3.

H1:
If DFI USAGE is "H1", DFI PACK NUMBER must be less than 5.

H2:
If DFI USAGE is "H2", DFI PACK NUMBER must be greater than 4. For a DFI2, the DFI USAGE defined for FAC 0 must be the same as the DFI USAGE for FAC 1.

HOST:
An SM (defined on an EQIM form where UNIT TYPE is not an SM-2000 class processor) may have no more than 20 FAC 0 and/or FAC 1 DFI USAGE(s) set to "TRUNK" or "HOST".

Copyright © 2006 Lucent Technologies

RDFI:
For 5E10 and later, if "RDFI" or "CDFI" is entered FAC 0/1 DFI MODE must be "ZCS" or "B8ZS" if FAC IND is 0, 1 or 3.

TRUNK:
An SM (defined on an EQIM form where UNIT TYPE is not an SM-2000 class processor) may have no more than 20 FAC 0 and/or FAC 1 DFI USAGE(s) set to "TRUNK" or "HOST".

For 5E9(2) and later, if DFI USAGE is entered for an SM-2000 class processor, DFI USAGE must be "TRUNK".

For 5E10 and later, if DFI USAGE is entered for an SM-2000 class processor, DFI USAGE must be "TRUNK" or "HOST".

For 5E10 and later, if "TRUNK" is entered, FAC 0/1 DFI MODE must be
"64K"
"D4"
"D464"
"D4NO"
"FE"
"FE8Z"
"FE64"
"FEB7"

3.13 EQUIPMENT STATUS

Description: Enter the Status of the Equipment. For new offices and units destined for factory testing, "O" (Operational) is the only allowed value. During off-line ODA database retrofits, the other values are valid.

Valid EQUIPMENT STATUS Entries

Entry	Definition
O	Operational (initial ODA)
G	Growth (ODA growth)
U	Unequipped

Data Rules:

This field is required when FAC 0 or FAC 1 is defined.

With 5E5 and later, for a new office (operational) or an equipment addition (growth),

- when FAC IND is 0 or 1 and DFI USAGE is

  "CDFI"

  "HOST"

  "RDFI" or

  "TRUNK",

  EQUIPMENT STATUS must be "O".

- when FAC IND is 3 and FAC 0 or 1 DFI USAGE is

  "CDFI"

  "HOST"

  "RDFI" or

  "TRUNK",

  FAC 0 or 1 EQUIPMENT STATUS must be "O".

- when FAC IND is 3 and FAC 1 DFI USAGE is "RDFI" or "CDFI",

  FAC 1 EQUIPMENT STATUS must be "O" or "G".

3.14 DATA GROUP

Description: Enter the Data Group Number. For 5E9(2) and later, 0 - 1 is used for SMs; 0 - 5 is used for SM-2000s.
Valid Entries:
5E9(1) and earlier: 0 - 1
5E9(2) and later: 0 - 5

Data Rules:

The DATA GROUP/PORT combination entered for FAC 0 must not match the DATA GROUP/PORT combination entered for FAC 1.

This field must be blank if DFI USAGE is "RDFI" or "CDFI"; otherwise, this field must be entered.

3.15 DATA PORT

Description: Enter the Data Port Number. For 5E9(2) and later, 0 - 15 is used for SMs; 0 - 23 is used for SM-2000s.
Valid Entries:
5E9(1) and earlier: 0 - 15
5E9(2) and later: 0 - 23

Data Rules:

If DATA GROUP is 1 for a non-SM-2000 class processor, DATA PORT may not be 15.

This field must be blank if DFI USAGE is "RDFI" or "CDFI"; otherwise, this field must be entered.

The following forms cannot have a duplicate Data Port assignment on the same Switching Module: EQDCLU (5810 Record), EQDS (5740 Record), EQDSC3 (5852 Record), EQDUP (5730-2), EQGDSC3 (5860 Record), EQIDCU (5846 Record), EQISLU (5731 Record), EQISTF (5823 Record), EQLU (5710 Record), EQPSU

Copyright © 2006 Lucent Technologies

(5741 Record), EQRA (5821 Record), EQTU (5720 Record).

3.16 VRBS

Description: Will the CGA (Carrier Group Alarm) conditioning mode be Verbose?

The verbose conditioning mode prints an individual craft message as each carrier group port is removed from, or restored to, service by CGA.

If VRBS is "N", normal conditioning will occur.

- **WARNING:** CGA verbose messages, like other output messages on the 5ESS Switch, are subject to brevity control. If the number of messages printed has exceeded the limit for the message class during a 15 minute period, further messages will not print.

Valid Entries: Y, N

3.17 CLFI

Description: Enter a Common Language Facility ID or a name that identifies the T1 facility. The name will appear on the MCC (Master Control Center).

Valid Entry: 1 - 12 characters

3.18 STUFFING PATTERN

Description: Enter the Channel Assignment Stuffing pattern. Each Digital Facility Interface Pack is assigned to a PIDB (Peripheral Interface Data Bus) in one of two Data Groups (0 or 1). Since a Digital Facility Interface Pack has only 24 circuits, and the Data Group has 32 available Time Slots, eight Time Slots are unused (idle). The Stuffing Pattern indicates this Time Slot assignment.

To prevent Time Slot blockage, spread the four patterns (A, B, C, D) evenly over all the Digital Facility Interface Packs assigned to a Data Group. Each pattern can be repeated up to three times per Data Group.

Valid STUFFING PATTERN Entries

Entry	Definition
A	Indicates Time Slots 0, 4, 8, 12, 16, 20, 24 and 28 are idle.
B	Indicates Time Slots 1, 5, 9, 13, 17, 21, 25 and 29 are idle.
C	Indicates Time Slots 2, 6, 10, 14, 18, 22, 26 and 30 are idle.
D	Indicates Time Slots 3, 7, 11, 15, 19, 23, 27 and 31 are idle.

Data Rules:

DFIs assigned to OSPS RISLUs must have a STUFFING PATTERN of "A".

This field must be entered for RISLU DFIs (DFI USAGE is "H1" or "H2") defined in the FAC 0 column.

This field must be blank for all other DFI USAGES; ODA will automatically assign stuffing patterns.

3.19 DFI MODE

Description: Enter the Digital Facility Interface (T1 carrier) transmission mode.

This field is required when FAC 0 or FAC 1 is defined. The DFI MODE entered for FAC 0 can be different from the DFI MODE entered for FAC 1.

Copyright © 2006 Lucent Technologies

Glossary for DFI Mode terms:

- B8ZS: Bipolar 8 Zero Substitution
- CCS: Common Channel Signaling
- ZCS: Zero Code Suppression

NOTE: 1:Applications that do not send signaling along the same path as data, e.g., ISDN and CCS7, automatically upgrade a 56K data rate to 64K. The 5ESS Switch application software upgrades the data rate to 64K by disabling rob-bit signaling on a per-channel basis. (Rob-bit signaling is the method traditionally used by trunks to send control signals along the same path as data. When an application such as ISDN or CCS7 sends the signal along another route, the rob-bit signaling is inhibited, reclaiming the PCM (Pulse Coded Modulation) bits "robbed" for signaling, and increasing the data rate to 64K.) If a 56K restricted channel mode is upgraded in this manner by application software, the resulting mode is 64K restricted channel which means that the user still cannot send zero bytes.

NOTE: 2: When the 56K/64K clear channel capability (B8ZS line coding) is enabled by an application, the user must ensure that ALL equipment in the transmission path, including multiplexers, repeaters, etc., are optioned for the B8ZS line coding. The failure to do so will result in interfaces such as RSMs, RISLUs, and PRI D-channels failing to initialize. All other types of data transmission sending zero octets will also be corrupted by failing to option the transmission path correctly.

The data rate is upgraded to 64K based on trunk group parameters such as the following:

- Common Channel Signaling System 7; OUTPULSING equal to "ISUP7"
- Extended Digital Subscriber Line Trunk; TRKCLS equal to "EDSL"
- EDSL Trunk for Hotel/Motel TSPS Service; TRKCLS equal to "EDSLHM"
- Two-Way Packet-Switched; Internal Protocol (Local and Toll); TRKCLS equal to "PACKET"

NOTE: 3: For 5E9(1) only, the 56K clear/56K restricted modes (FE and FE8Z) for OSPS RISLUs can be changed to 64K clear/64K restricted modes (ZCS and B8ZS) but not vice versa.

Valid DFI MODE Entries	
D4 Compatible Modes	
Entry	**Definition**
D4	56K restricted channel transmission; cannot send zero bytes, rob-bit, with ZCS. Always 56K.
64K	56K/64K clear channel transmission; can send zero bytes, rob-bit, with B8ZS. See Notes 1 and 2 above.
D464	56K/64K restricted channel transmission; cannot send zero bytes, rob-bit, with ZCS. See Note 1 above.
D4NO	56K restricted channel transmission; cannot send zero bytes, rob-bit, no ZCS. Always 56K.

Valid DFI MODE Entries	
Extended Super Frame Compatible Modes	
Entry	**Definition**
B8ZS	64K clear channel transmission on the umbilical timeslots. B8ZS, CCS, 4K data link. Used in RISLUs and RSMs that are remoted over 24-channel facilities with or without multiplexers. All umbilicals to an RSM must be set to this mode to allow 64K clear data calls to and from the RSM. See Note 3 above.
FE	56K restricted channel transmission; cannot send zero bytes, rob-bit, no ZCS. Always 56K. If DFI USAGE is "H1" or "H2", this mode can only be used for OSPS RISLUs remoted over 24-channel

Copyright © 2006 Lucent Technologies

	facilities that require ZCS. OSPS initializes its DFI's such that ZCS is activated for this mode. See Note 3 above.
FE8Z	56K/64K clear channel transmission; can send zero bytes, rob-bit, with B8ZS. If DFI USAGE is "H1" or "H2", this mode can only be used for OSPS RISLUs remoted over 24-channel facilities that do not require ZCS. FE8Z is the recommended DFI mode for CCS7 and Primary Rate Interface trunks utilizing Extended Super Frame format with B8ZS. However, if the PRI DFI resides on an RSM, all RSM umbilicals must be set to B8ZS to allow inter-SM 64K clear data calls. See Notes 1, 2 and 3 above.
FEB7	56K restricted channel transmission; cannot send zero bytes, rob-bit, with ZCS. Always 56K.
FE64	56K/64K restricted channel transmission; cannot send zero bytes, rob-bit, with ZCS. See Note 1 above.
ZCS	64K restricted channel transmission on the umbilical timeslots. CCS, 4K data link. Used in RISLUs and RSMs that are remoted over 24-channel facilities that require ZCS, due to the presence of B8ZS-compatible multiplexers. See Note 3 above.

NOTE: 4: All modes operate over 24-channel facilities and are equipped with AMI (Alternate Mark Inversion).

Data Rules:

Please refer to Figure 2 for valid combinations of DFI MODE, DFI USAGE and DLTU TYPE.

DFI MODE must be "ZCS", or "B8ZS" when DFI USAGE is "CDFI" or "RDFI".

3.20 FIU SUBGROUP

Description: Enter the Facility Interface Usage Subgroup assignment.
Valid Entries: A or B

Data Rules:

The FIU SUBGROUP/PORT combination entered for FAC 0 must not match the FIU SUBGROUP/PORT combination entered for FAC 1.

This field must be entered if DFI USAGE is "RDFI" or "CDFI"; otherwise, this field must be blank. If DFI USAGE is "RDFI", see Figure 2 for required assignments.

3.21 FIU PORT

Description: Enter the Facility Interface Usage Port assignment.
Valid Entries: 0 - 9

Data Rules:

This field must be entered if DFI USAGE is "RDFI" or "CDFI"; otherwise, this field must be blank.

3.22 DFI-2 PM GRP

Description: Enter the name of the DFI-2 performance monitoring group.

Software Release: 5E8 and later
Valid Entries: 1 - 8 characters

Data Rules:

FAC0 and FAC1 DFI-2 PM GRP must not equal "/DF2GDEF".

Copyright © 2006 Lucent Technologies

When FAC IND is 0, FAC 0 and FAC 1 DFI-2 PM GRP must be blank.

When FAC IND is 1, FAC 1 DFI-2 PM GRP must be blank.

When DFI-2 PM GRP is entered, the corresponding PMTHRESH form (5948-3 Record) must be entered with PM TYPE of "DFI2".DC255

3.23 AFAC ID

Description: The AFAC ID (Advanced Mobile Phone Service Facility Identifier) is used to communicate maintenance information to the ECP (Executive Cellular Processor) complex for the facility of a DFI. A Digital Line/Trunk is assigned to an AUTOPLEX facility if there is an entry in the AFAC ID field. All users on the DFI must be DCS (Digital Cellular Switch) trunks when a value is entered in AFAC ID.

Software Release: 5E9(1) and later
Valid Entries:

For 5E13 and earlier: 1 - 880

For 5E14: 1 - 4080

For 5E15 and later: 1 - 4500

Data Rules:

When an AFAC ID is entered, DFI USAGE must be "TRUNK".

AFAC IDs must be unique across EQDUP forms.

For 5E13 and later, AFAC IDs must be unique across EQDUP and EQVT forms.

DLTUs (Digital Line/Trunk Units) with Digital Line/Trunks assigned to AUTOPLEX facilities must:

- be located on SMs which are operational,
- have a CONFIGURATION on the EQIM form set to either "LOADED" or an SM-2000 class processor,
- be equipped with a pumpable LDSU (Local Digital Service Unit). (An SM is equipped with a pumpable LDSU if an EQDS2P form exists where SWITCHING MODULE on the EQDS2P form matches SM on the EQIM form.)The LDSU CLI on the EQIM form:
- where CONFIGURATION is "LOADED", must be 1, 3, or 80009 (hexadecimal) for CONTROLLER 0 and CONTROLLER 1.
- where CONFIGURATION is an SM-2000 class processor, must be 0 for CONTROLLER 0 and CONTROLLER 1.

For 5E11 and later, if the AFAC ID field is entered, the specified SM must meet one of the following sets of conditions:

- EQIM CONFIGURATION must be "LOADED" or "SIGNALING", EQIM EQSTATUS must be "O", EQIM CONTROLLER 0 LDSU CLI must have a value of 1, 3, 80009, or 800019 hex, and EQIM CONTROLLER 1 LDSU CLI must have a value of 1, 3, 80009, or 800019 hex, OR

Copyright © 2006 Lucent Technologies

- EQIM CONFIGURATION must be an SM-2000 or 2KPPC class processor, EQIM EQSTATUS must be "O", and EQDSC3 CLI must have a value of 0 or 1 for the same SM.

4. FORM ENTRIES - EQDUP FORM 5730-4 RECORD

4.1 * SM

Description: Enter the Switching Module number.
Valid Entries: 1 - 192

4.2 * DLTU

Description: Enter the DLTU number.
Valid Entries: 0 - 5

4.3 * DFI PACK NBR

Description: Enter the Digital Facility Interface Pack Number.
Valid Entries: 1 - 16

FAC 0/1 ECHO CANCELER PACKS

The following fields (Section 4.4 - Section 4.17) apply to Echo Canceler Units. These fields support the CDMA (Code Division Multiple Access) feature. For more information on this feature, see Division 2, Section 8B.

Echo Canceler fields must all be known or all be unknown.

All FAC 1 entries must be blank when FAC IND is 0 or 1.

If Echo Cancelers are defined on this form, then a corresponding EQECSU form must be entered for this SM.

4.4 ECSU

Description: Enter the unit number for the ECU on Facility 0/1. The ECU (Echo Canceler Unit) is a single shelf unit which can contain up to 20 Echo Canceling circuits. The circuit for the Echo Canceler on DFI (Digital Facility Interface) Facility 0/1 is located on this unit.

Software Release: 5E10 and later.
Valid Entries: 0 - 5

Data Rules:

Echo Canceler fields must all be known or all be unknown.

If Echo Cancelers are defined on this form, then a corresponding EQECSU form must be entered for the same SM and the ECSU entries must match.

EQDUP form(s) cannot duplicate FAC 0 and/or FAC 1 Echo Canceler Board assignments on the same SM. FAC 0/1 ECSU and POS entries must be unique on the same SM.

Copyright © 2006 Lucent Technologies

4.5 POS

Description: Enter the EC5 (Echo Canceler 5) card slot number for the Echo Canceler circuit position on Facility 0/1. The Position for Facility 0/1 field indicates the Echo Canceler circuit for Facility 0/1 on the DFI.

Software Release: 5E10 and later.
Valid Entries: 1 - 20

4.6 EC CI

Description: Enter the control interface number for Echo Canceler circuit for Facility 0/1 of the DFI.

Software Release: 5E10 and later.
Valid Entries:
For SM: 0 - 1
For SM-2000: 0 - 3

Data Rules:

CONTROL GROUP must not equal FAC 0 EC CI or FAC 1 EC CI.

FAC 0 EC CI must not equal FAC 1 EC CI.

4.7 EC PICB

Description: Enter the Peripheral Interface Control Bus for the Echo Canceler circuit on Facility 0/1 of the DFI.

Software Release: 5E10 and later.
Valid Entries: 0 - 22

Data Rules:

CONTROL PORT must not equal FAC 0 EC PICB or FAC 1 EC PICB.

FAC 0 EC PICB must not equal FAC 1 EC PICB.

4.8 EC CLI

Description: Enter the change level indicator value for echo canceler circuit on Facility 0/1 of the DFI.

For a complete listing of valid CLI values, J-Drawing and list combinations, see Division 8, Section 1.

Software Release: 5E10 and later.
Valid Entries: 0 - 7FFFFFFF (hexadecimal)

Data Rules:

The CLI values for the FAC 0 EC CLI and/or FAC 1 EC CLI assignments for the ECHO CANCELER is a hexadecimal value of 0, 1, 2, 3, 8, 9, a, or b.

If FAC 0/1 EC CLI is an odd number designating it as the two board configuration, then FAC 0/1 POS must be an odd number.

Copyright © 2006 Lucent Technologies

4.9 END PATH

Description: Enter the end path value in MS (Milliseconds) that indicates how much Echo Canceler delay is needed for the echo canceler circuit.

Software Release: 5E10 and later.
Valid Entries: 16MS, 32MS, or 64MS.

4.10 TONE DIS

Description: Enter the tone disabling value used to indicate the state of the tone disabling function for the Echo Canceler on facility 0/1.

Software Release: 5E10 and later.
Valid Entries:

Valid TONE DIS Entries

Entry	Definition
NOTONE	No tone can disable echo cancellation.
RVRTONE	Reverse tone disables echo cancellation.
STRVTONE	Straight and reverse tones disable echo cancellation.

4.11 ALPHA VAL

Description: Enter the alpha value in DB (Decibells) that defines the alpha value or return loss used by the Echo Canceler for Facility 0/1.

Software Release: 5E10 and later.
Valid Entries: 0 - 6 (DB)

4.12 TRAN MATCH

Description: Is transient noise matching turned on for the Echo Canceler on Facility 0/1? An entry of "N" indicates the transient noise matching is off.

Software Release: 5E10 and later.
Valid Entries: Y, N

4.13 NB ENGDT

Description: Is narrow band energy detection turned on for the echo canceler on Facility 0/1? An entry of "N" indicates it is off.

Software Release: 5E10 and later.
Valid Entries: Y, N

4.14 RSD ECTL

Description: Is the residual echo control or center clipping turned on for the Echo Canceler on Facility 0/1? An entry of "N" indicates it is off.

Software Release: 5E10 and later.
Valid Entries: Y, N

Copyright © 2006 Lucent Technologies

4.15 TRAN EN

Description: Is the transient echo control enabled on the echo canceler on Facility 0/1? An entry of "N" indicates it is disabled.

Software Release: 5E10 and later.
Valid Entries: Y, N

4.16 EC BYP

Description: Will the Echo Canceler devices be bypassed? The Echo Canceler bypass setting is used to bypass the Echo Canceler devices on Facility 0/1.

- **WARNING:** In order for the setting of this variable to take effect via Recent Change, the DFI which is paired with Echo Canceler must be restored or a full/selective initialization must take place.

Software Release: 5E10 and later.
Valid Entries: Y, N

4.17 EC MODE

Description: Enter the interface mode for the Echo Canceler on Facility 0/1.

Software Release: 5E10 and later.
Valid Entries:

Valid EC MODE Entries	
Entry	**Definition**
FAC	Echo Canceler pointing towards the facility.
TSI	Echo Canceler pointing towards the time slot interchange (SM).

Data Rules:

If FAC 0/1 EC MODE is entered it must be "FAC".

An SM which has SM USAGE entered as "RSM" and bit 1 (where bit 0 is the least significant bit) of DLI CLI 0 set to 1 on the EQIM form, requires 4 Control Timeslot umbilicals to be defined on the EQDUP form as follows:

DLTU	DFI	DFI USAGE	CONTROL GROUP	CONTROL PORT	DFI TRANSMISSION MODE	FIU SUBGROUP	FIU PORT
0	1	RDFI	1	19	Note 1	A	0
0	2	RDFI	1	18	Note 1	B	0
0	3	RDFI	1	17	Note 1	A	1
0	4	RDFI	1	16	Note 1	B	1

An SM which has SM USAGE entered as "RSM" and bit 1 (where bit 0 is the least significant bit) of DLI CLI 0 set to 0 on the EQIM form, requires a maximum of 2 Control Timeslot umbilicals (Minimally Configured RSM) to be defined on the associated EQDUP form as follows:

DLTU	DFI	DFI USAGE	CONTROL GROUP	CONTROL PORT	DFI TRANSMISSION MODE	FIU SUBGROUP	FIU PORT
0	1	RDFI	1	19	Note 1	A	0
0	2	RDFI	1	18	Note 1	B	0

Copyright © 2006 Lucent Technologies

Note 1: ZCS, B8ZS or RZBTS for 5E5 and later.

Figure 1 REMOTE DIGITAL FACILITY INTERFACE ASSIGNMENTS 5E3 AND LATER SOFTWARE RELEASES

DFI MODE (EQDUP form)	DFI USAGE (EQDUP form)	DLTU TYPE (EQDU form)
B8ZS	H1/H2	DLTURH
B8ZS	HOST	DLTU24 or DLTU48
B8ZS	CDFI/RDFI	DLTU24 or DLTU48
D4	TRUNK	DLTU24 or DLTU48
D464	TRUNK	DLTU24 or DLTU48
D4NO	TRUNK	DLTU48
FE	TRUNK	DLTU24 or DLTU48
FE	H1/H2	DLTURH
FEB7	TRUNK	DLTU24 or DLTU48
FE8Z	TRUNK	DLTU24 or DLTU48
FE8Z	H1/H2	DLTURH
FE64	TRUNK	DLTU24 or DLTU48
ZCS	H1/H2	DLTURH
ZCS	HOST	DLTU24 or DLTU48
ZCS	CDFI/RDFI	DLTU24 or DLTU48
64K	TRUNK	DLTU24 or DLTU48

Figure 2 VALID DFI MODE, DFI USAGE, AND DLTU TYPE COMBINATIONS 5E5 AND LATER SOFTWARE RELEASES

```
SCREEN 1 OF 3                      5ESS SWITCH
eqdup                     OFFICE DATA ADMINISTRATION
(5730-2/3/4/5)      DIGITAL LINE/TRUNK UNIT PACK EQUIPAGE

*1. SM            ___                                FAC 0            FAC 1
*2. DLTU          _           DFI USAGE         9. _______       21. _______
*3. DFI PACK NBR  __          EQUIPMENT STATUS 10. _            22. _
 4. FAC IND       0           DATA GROUP       11. _            23. _
#5. CONTROL GROUP _           DATA PORT        12. __           24. __
#6. CONTROL PORT  __          VRBS             13. _            25. _
#7. CLI           _________   CLFI             14. _____________ 26. _____________
 8. CLEI          ___________ STUFFING PATTERN 15. _
                              DFI MODE         16. ______       27. ______
                              FIU SUBGROUP     17. _            28. _
                              FIU PORT         18. _            29. _
                              DFI-2 PM GRP     19. _________    30. _________
                              AFAC ID          20. _____        31. _____
```

```
SCREEN 2 OF 3                      5ESS SWITCH
eqdup                     OFFICE DATA ADMINISTRATION
(5730-2/3/4/5)      DIGITAL LINE/TRUNK UNIT PACK EQUIPAGE

 ECHO CANCELER PACKS            ECHO CANCELER PACKS
32. FAC 0 ECSU       _         43. FAC 0 TRAN EN _
```

```
33. FAC 0 POS        __        44. FAC 0 EC BYP  _
34. FAC 0 EC CI      _         45. FAC 0 EC MODE _____
35. FAC 0 EC PICB    __
36. FAC 0 EC CLI     ________
37. FAC 0 ENDPATH    __
38. FAC 0 TONE DIS   ________
39. FAC 0 ALPHA VAL  _
40. FAC 0 TRAN MATCH _
41. FAC 0 NB ENGDT   _
42. FAC 0 RSD ECTL   _
```

```
SCREEN 3 OF 3                    5ESS SWITCH            _
eqdup                     OFFICE DATA ADMINISTRATION
(5730-2/3/4/5)      DIGITAL LINE/TRUNK UNIT PACK EQUIPAGE

 ECHO CANCELER PACKS            ECHO CANCELER PACKS
46. FAC 1 ECSU       _         57. FAC 1 TRAN EN _
47. FAC 1 POS        __        58. FAC 1 EC BYP  _
48. FAC 1 EC CI      _         59. FAC 1 EC MODE _____
49. FAC 1 EC PICB    __
50. FAC 1 EC CLI     ________
51. FAC 1 END PATH   __
52. FAC 1 TONE DIS   ________
53. FAC 1 ALPHA VAL  _
54. FAC 1 TRAN MATCH _
55. FAC 1 NB ENGDT   _
56. FAC 1 RSD ECTL   _
```

Figure 3 SAMPLE EQDUP FORM 5E10 - 5E14 SOFTWARE RELEASES

```
SCREEN 1 OF 3                    5ESS SWITCH
eqdup                     OFFICE DATA ADMINISTRATION
(5730-2/3/4/5)      DIGITAL LINE/TRUNK UNIT PACK EQUIPAGE

*1. SM            ___                                FAC 0            FAC 1
*2. DLTU          __          DFI USAGE        10. ______       23. ______
*3. DFI PACK NBR  __          EQUIPMENT STATUS 11. _           24. _
 4. FAC IND       0           DATA GROUP       12. _           25. _
 5. INTF UNIT     0           DATA PORT        13. __          26. __
#6. CONTROL GROUP _           VRBS             14. _           27. _
#7. CONTROL PORT  __          CLFI             15. ____________ 28. ___________
#8. CLI           ________    APPL             16. ____        29. ____
 9. CLEI          __________  STUFFING PATTERN 17. _
                              DFI MODE         18. _____       30. _____
                              FIU SUBGROUP     19. _           31. _
                              FIU PORT         20. _           32. _
```

```
                              DFI-2 PM GRP     21. ________     33. ________
                              AFAC ID          22. ____         34. ____
```

```
SCREEN 2 OF 3                      5ESS SWITCH
eqdup                       OFFICE DATA ADMINISTRATION
(5730-2/3/4/5)      DIGITAL LINE/TRUNK UNIT PACK EQUIPAGE

 ECHO CANCELER PACKS            ECHO CANCELER PACKS
35. FAC 0 ECSU       _         46. FAC 0 TRAN EN _
36. FAC 0 POS        __        47. FAC 0 EC BYP  _
37. FAC 0 EC CI      _         48. FAC 0 EC MODE _____
38. FAC 0 EC PICB    __
39. FAC 0 EC CLI     ________
40. FAC 0 ENDPATH    __
41. FAC 0 TONE DIS   ________
42. FAC 0 ALPHA VAL  _
43. FAC 0 TRAN MATCH _
44. FAC 0 NB ENGDT   _
45. FAC 0 RSD ECTL   _
```

```
SCREEN 3 OF 3                      5ESS SWITCH             _
eqdup                       OFFICE DATA ADMINISTRATION
(5730-2/3/4/5)      DIGITAL LINE/TRUNK UNIT PACK EQUIPAGE

 ECHO CANCELER PACKS            ECHO CANCELER PACKS
49. FAC 1 ECSU       _         60. FAC 1 TRAN EN _
50. FAC 1 POS        __        61. FAC 1 EC BYP  _
51. FAC 1 EC CI      _         62. FAC 1 EC MODE _____
52. FAC 1 EC PICB    __
53. FAC 1 EC CLI     ________
54. FAC 1 END PATH   __
55. FAC 1 TONE DIS   ________
56. FAC 1 ALPHA VAL  _
57. FAC 1 TRAN MATCH _
58. FAC 1 NB ENGDT   _
59. FAC 1 RSD ECTL   _
```

Figure 4 SAMPLE EQDUP FORM 5E15 SOFTWARE RELEASE

```
SCREEN 1 OF 4                      5ESS SWITCH
eqdup                       OFFICE DATA ADMINISTRATION
(5730-2/3/4/5)      DIGITAL LINE/TRUNK UNIT PACK EQUIPAGE

*1. SM            ___               APT TESTING
*2. DLTU          __            10. ALG FAC 0 _____
*3. DFI PACK NBR  __            11. ALG FAC 1 _____
```

```
 4. FAC IND       0
 5. INTF UNIT     0
#6. CONTROL GROUP _
#7. CONTROL PORT  __
#8. CLI           ________
 9. CLEI          __________
```

```
SCREEN 2 OF 4                    5ESS SWITCH
eqdup                     OFFICE DATA ADMINISTRATION
(5730-2/3/4/5)      DIGITAL LINE/TRUNK UNIT PACK EQUIPAGE

                     FAC 0                        FAC 1
DFI USAGE        12. ______                   25. ______
EQUIPMENT STATUS 13. _                        26. _
DATA GROUP       14. _                        27. _
DATA PORT        15. __                       28. __
VRBS             16. _                        29. _
CLFI             17. ___________________________ 30. ___________________________
APPL             18. ____                     31. ____
STUFFING PATTERN 19. _
DFI MODE         20. _____                    32. _____
FIU SUBGROUP     21. _                        33. _
FIU PORT         22. _                        34. _
DFI-2 PM GRP     23. ________                 35. ________
AFAC ID          24. ____                     36. ____
```

```
SCREEN 3 OF 4                    5ESS SWITCH
eqdup                     OFFICE DATA ADMINISTRATION
(5730-2/3/4/5)      DIGITAL LINE/TRUNK UNIT PACK EQUIPAGE

 ECHO CANCELER PACKS            ECHO CANCELER PACKS
37. FAC 0 ECSU       _         48. FAC 0 TRAN EN _
38. FAC 0 POS        __        49. FAC 0 EC BYP  _
39. FAC 0 EC CI      _         50. FAC 0 EC MODE _____
40. FAC 0 EC PICB    __
41. FAC 0 EC CLI     ________
42. FAC 0 ENDPATH    __
43. FAC 0 TONE DIS   ________
44. FAC 0 ALPHA VAL  _
45. FAC 0 TRAN MATCH _
46. FAC 0 NB ENGDT   _
47. FAC 0 RSD ECTL   _
```

```
SCREEN 4 OF 4                    5ESS SWITCH            _
```

```
eqdup                     OFFICE DATA ADMINISTRATION
(5730-2/3/4/5)      DIGITAL LINE/TRUNK UNIT PACK EQUIPAGE

 ECHO CANCELER PACKS            ECHO CANCELER PACKS
51. FAC 1 ECSU       _         62. FAC 1 TRAN EN _
52. FAC 1 POS        __        63. FAC 1 EC BYP  _
53. FAC 1 EC CI      _         64. FAC 1 EC MODE _____
54. FAC 1 EC PICB    __
55. FAC 1 EC CLI     ________
56. FAC 1 END PATH   __
57. FAC 1 TONE DIS   ________
58. FAC 1 ALPHA VAL  _
59. FAC 1 TRAN MATCH _
60. FAC 1 NB ENGDT   _
61. FAC 1 RSD ECTL   _
```

Figure 5 SAMPLE EQDUP FORM 5E16 AND LATER SOFTWARE RELEASES

SEC. 18: 5731 RECORD
INTEGRATED SERVICES LINE UNIT EQUIPAGE FORM - EQISLU

1. GENERAL

The 5731 Integrated Service Line Unit Equipage Record and EQISLU form are available with the 5E3 and later Software Releases. They are used to define ISLU (Integrated Services Line Unit) assignments in a 5ESS Switch.

With 5E4(2) and later Software Releases, for every unique combination of Switching Module and PSU Shelf on the EQISLU form (5731 Record), there must be an EQPSUPH form (5742 Record) with a corresponding Switching Module and PSU Shelf.

1.1 Recent Change View

The corresponding Recent Change View for this form is 22.5.

2. FORM AND RECORD ENTRIES

2.1 BASE AND CONTROL, ESS UNIT

Enter the Base and Control Number and the office name on each record.

2.2 * SWITCHING MODULE

Description: Enter the Switching Module Number.

Required Field.
Valid Entries: 1 - 192

Data Rules:

Each Switching Module entered on this form must be defined on the EQIM form where the value entered for CONFIGURATION supports Integrated Services.

2.3 * ISLU NUMBER

Description: Enter the Integrated Services Line Unit Number.

Required Field.
Valid Entries: 0 - 7 for ISLU, or 0 - 41 for ISLU2

Data Rules:

ISLUs share the same unit number range with RISLUs, LUs, and IDCUs. Therefore, unit numbers assigned on this form may not be assigned on any EQRISLU, EQLU, or EQIDCU form with the same SM number.

For 5E10 and later, any EQISLU form(s) with ISLU NUMBER greater than 7 must be assigned to an SM where the corresponding UNIT TYPE is "SM-2000".

2.4 UNIT TYPE

Description: Enter the ISLU type.

Copyright © 2006 Lucent Technologies

Software Release: 5E10 and later.
Required Field.
Valid Entries: ISLU or ISLU2

Data Rules:

ISLU NUMBER must be between 0 and 7 when UNIT TYPE is "ISLU".

2.5 INTF UNIT

Description: Enter the Interface Unit number. This field was added to support the 5E15 Optically Extended Control and Data Unit feature. See Division 2, Section 9V.

Required Field.
Valid Entries: 0 - 8

Data Rules:

When INTF UNIT is greater than 0, it must be defined on the EQXCDU form (5853 Record) for the same Switching Module. In addition, the EQSTAT value on the EQCI must not exceed the MOD CTL SG0/1 EQSTAT on the EQXCDU form. (EQSTAT of "O" is greater than EQSTAT of "G", and EQSTAT of "G" is greater than EQSTAT of "U".)

The SM/INTF UNIT/DATA GRP combinations entered on this form must be defined on a EQDI form or a EQXCDU form. Also, the EQSTAT on the matching EQDI or EQXCDU form must be greater than or equal to the equipment status value ("O", "G", or "U") on this form (e.g., "O" is greater than "G" which is greater than "U"). Note also that when INTF UNIT is greater than 0 and DATA GRP is 0, these Data Groups are defined on the EQXCDU form.

For 5E16(2) and later, when INTF UNIT is 0, EQUIPMENT BAY must be 000 - 014, 100 - 104, or 200 - 208.

2.6 CONTROL GROUP

Description: For 5E9(2) and earlier: Enter the Control Group Number. Both Service Groups are defined with the same input form so the value entered here represents the assigned Control Group for both Service Groups.

For 5E10 and later: Enter Control interface group number.

Required Field.
Valid Entries:
For 5E9(2) and earlier: 0 - 1
For 5E10 and later: 0 - 1 for SM
or 0 - 3 for SM-2000

Data Rules:

For 5E10 and later, only SM-2000 can use CONTROL GROUP values greater than 1.

CONTROL GROUP numbers assigned on the following forms must be defined as CI on an EQCI form: EQDCTU (5751 Record), EQDCLU (5810 Record), EQDS (5740 Record), EQDSC3 (5852 Record), EQDUP (5730-2), EQGDSC3 (5860 Record), EQIDCU (5846 Record), EQISLU (5731 Record), EQISTF (5823 Record), EQLU (5710 Record), EQPSU (5741 Record), EQRA (5821 Record), EQTU (5720 Record), EQFIU

Copyright © 2006 Lucent Technologies

(5753 Record), EQMSU (5750 Record), EQRCLK (5723 Record). Furthermore, the EQSTAT on the matching EQCI form must be greater than or equal to the equipment status value on the equipment form (i.e., "O"' is greater than "G" which is greater than "U").

2.7 CONTROL PORT

Description: Enter the Control Port number assigned to Service Group 0. Since Service Group 0 and Service Group 1 require consecutive Control Port Numbers on the same Control Group, the value for the Service Group 1 will be inferred from the value entered here for Service Group 0. If the Control Group value is 0, Control Ports 00 and 01 cannot be assigned because they are reserved for the Local Digital Service Unit.

Required Field.
Valid Entries: 0 - 20, even numbers only

Data Rules:

Control Port assignments cannot be duplicated on the following forms: EQDCTU (5751 Record), EQDCLU (5810 Record), EQDS (5740 Record), EQDSC3 (5852 Record), EQDUP (5730-2), EQGDSC3 (5860 Record), EQIDCU (5846 Record), EQISLU (5731 Record), EQRISLU (5732 Record), EQISTF (5823 Record), EQLU (5710 Record), EQPSU (5741 Record), EQRA (5821 Record), EQTU (5720 Record), EQFIU (5753 Record), EQMSU (5750 Record), EQRCLK (5723 Record).

For 5E12 and later, for the EQAIU, EQIDCU, EQISLU, EQRISLU and EQPSU forms, two control ports are assigned based on the Control Port entered on the form. The first is the Control Port entered on the form, the second Control Port is one plus the Control Port entered on the form. Non-SM-2000 class processors reserve Control Group/Control Port 0/0 and 0/1 for the Local Digital Service unit. No other unit may specify Control Group/Control Port 0/0 or 0/1 for non-SM-2000 class processors. Non-SM-2000 class processors reserve Control Group/Control Port 0/0 and 0/1 for the Local Digital Service unit. No other unit may specify Control Group/Control Port 0/0 or 0/1 for non-SM-2000 class processors.

2.8 EQUIPMENT BAY

Description: Enter the Equipment Location Bay Number.

Required Field.
Valid Entries:

Valid EQUIPMENT BAY Entries, 5E9(2) - 5E16(1)

Entry	Definition
0 - 4	Switching Module (non-SM-2000).
0 - 14	SM-2000; SM Cabinet aisle.
100 - 104	SM-2000; Back panel; wiring position.
200 - 208	SM-2000; Front panel; door position.

Valid EQUIPMENT BAY Entries for 5E16(2) and later

Entry			Type
000 - 004			SM
000 - 014,	100 - 104,	200 - 208,	SM-2000
A00 - A14,	B00 - B04,	C00 - C08,	
D00 - D14,	E00 - E04,	F00 - F08,	
G00 - G14,	H00 - H04,	J00 - J08,	
K00 - K14,	L00 - L04,	M00 - M08,	
N00 - N14,	P00 - P04,	Q00 - Q08,	
R00 - R14,	S00 - S04,	T00 - T08,	
U00 - U14,	V00 - V04,	W00 - W08,	

Copyright © 2006 Lucent Technologies

X00 - X14,	Y00 - Y04,	Z00 - Z08	

Data Rules:

When one ISLU is mounted in an EQUIPMENT BAY, it must be at EQUIPMENT VERTICAL position 36.

For 5E10 and later, when two ISLU2s are mounted in the same SWITCHING MODULE and EQUIPMENT BAY, the bottom ISLU2 must be mounted at EQUIPMENT VERTICAL position 7 and the top ISLU2 must be mounted at EQUIPMENT VERTICAL position 41.

For 5E10 and later,

- when one ISLU2 is mounted in an EQUIPMENT BAY and PRODUCT on the OFCOPT form is NOT equal to "WNC" EQUIPMENT VERTICAL must be 7.
- when one ISLU2 is mounted in an EQUIPMENT BAY and PRODUCT on the OFCOPT form is equal to "WNC" EQUIPMENT VERTICAL must be either 7 or 41.

2.9 EQUIPMENT VERTICAL

Description: Enter the Vertical Equipment Location that specifies the bottom of the unit. Expected values are 36 for the first ISLU and 7 for a second ISLU. If two ISLUs are mounted in the same SM and Equipment Bay, the bottom ISLU is mounted in location 7, and the top ISLU is mounted in location 36.

Software Release: 5E4(2) and later
Required Field.
Valid Entries: 0 - 84

2.10 EQUIPMENT AISLE

Description: Enter the Equipment Location Aisle Number. This entry consists of a floor and aisle number. The first two digits are the floor number and the last two digits are the aisle number. Valid floor numbers are 00 to 99. It is recommended that Floor 00 be used for equipment located in the basement per floor plan designation.

Required Field.
Valid Entries: 0000 - 9999

2.11 COMMON CONTROL EQST

Description: Enter the Equipment Status of the ISLU's Common Control Boards. Both Common Control Boards have the same status.

New 5ESS Switch offices and units being added for factory testing require the Operational state.

Required Field.
Default: O.
Valid Entries:

Valid COMMON CONTROL EQST Entries

Entry	Definition
U	Unequipped
G	Growth
O	Operational

Copyright © 2006 Lucent Technologies

2.12 COMMON DATA EQST

Description: Enter the Equipment Status of the ISLU's Common Data Boards. Both Common Control Boards have the same status.

Required Field.
Default: O
Valid Entries:

Valid COMMON DATA EQST Entries

Entry	Definition
U	Unequipped
G	Growth
O	Operational

Data Rules:

New 5ESS Switch Offices and units being added for factory testing require the Operational state. During off-line ODA database retrofits, values other than "O" may exist; but if they do, the EQST entered here must be lower than or equal to the COMMON CONTROL EQST. The hierarchy of Equipment Status, from lowest to highest, are Unequipped, Growth and Operational. The equipment status of the PIDBs on the PIDBs list must not be greater than the COMMON DATA EQST.

2.13 COMMON CONTROL CLI

Description: Enter the Change Level Indicator for the Common Control Boards (both boards must have the same CLI). For a complete listing of valid CLI values, J-Drawing and list combinations, see Division 8, Section 1.

Required Field.
Valid Entries: 0 - 7fffffff (hexadecimal)

2.14 COMMON DATA CLI

Description: Enter the Change Level Indicator for the Common Data Boards (both boards must have the same CLI). For a complete listing of valid CLI values, J-Drawing and list combinations, see Division 8, Section 1.

Required Field.
Valid Entries: 0 - 7fffffff (hexadecimal)

2.15 D-CHANNEL TYPE

Description: Enter the D-channel Type.

Required Field.

Valid D-CHANNEL TYPE Entries

Entry	Definition
TSIU	Cut-through the TSIU (Time Slot Interchange Unit)
PSU	Directly connected to a Packet Switching Interface Unit

Data Rules:

If "TSIU" is entered, there must be at least one PIDB TYPE of "DUAL", and there may not be any PIDB TYPEs

Copyright © 2006 Lucent Technologies

of "PSU".

If "PSU" is entered, there must be at least one PSU PIDB TYPE entered.

2.16 CD CONFIGURATION

Description: Enter the Common Data configuration.

The "ACTSTBY" entry is the recommended option for OSPS and Pinnacle (Commercial) ACD. (For more information on CACD features see Division 2, Section 3D.)

Required Field.

Valid CD CONFIGURATION Entries

Entry	Definition
ACTSTBY	Active/Standby
LDSHRD	Load Shared

Data Rules:

If "ACTSTBY" is entered, there must be at least one PIDB TYPE of "DUAL" entered, and a SHRD PIDB TYPE entry is not allowed.

If "LDSHRD" is entered, there must be at least one SHRD PIDB TYPE entered.

PIDBs

PIDBs (fields Section 2.17 - Section 2.21) are to be equipped in pairs of the same PIDB TYPE and relative PIDB NO. on the two sides. The entries on this form are for Side 0 only, since the assignments for Side 1 can be inferred from the assignments for Side 0. PIDB NO. 0 is always required and must have a PIDB TYPE of "DUAL" or "SHRD". If PIDB NO. 1 is entered, it must have a PIDB TYPE of "DUAL" or "SHRD".

PIDBs of PIDB TYPE "DUAL" or "SHRD" connect to the TSIU (Time Slot Interchange Unit) and the assignments to the same PIDB NO. on the two sides must be made to the same DATA GROUP with Side 0 assigned to an even numbered DATA PORT and Side 1 assigned to the next higher odd numbered DATA PORT. PIDBs of type "PSU" connect to the PSU with the same relative PIDB NO. assigned to the same PSU SHELF and DF POS Number.

If B-Channel traffic is to be carried on the ISLU, there must be at least one PIDB TYPE of either "DUAL" or "SHRD". D-Channel traffic requires at least one PIDB TYPE of either "DUAL" or "PSU".

Note that if D TIMESLOTs and/or B TIMESLOTs have not been assigned via DSL, DSLAP, MISLINK, or OSPSDSL forms, ODA's automatic time slot assignment algorithm allocates four timeslots to each SM/ISLU/LGC (Line Group Controller) configuration for each PIDB from the ISLU to the PSU as follows: EN (Equipment Numbers) assigned to LGCs 0 - 7 (the 5th and 6th digit of the EN is the LGC) get timeslots on odd numbered EQISLU PIDBs and EN assigned to LGCs 8 - 15 get timeslots on even numbered EQISLU PIDBs, each with a PIDB TYPE of "PSU".

2.17 PIDB TYPE

Description: Enter the type of PIDB.

Valid PIDB TYPE Entries

Entry	Definition
DUAL	Dual PIDB.
SHRD	Shared Load PIDB.

PSU	Direct PIDB to a PSU.

Data Rules:

For valid combinations of PIDB TYPE and other fields, see Figure 1.

If PIDB TYPE is "DUAL", CD CONFIGURATION must be "ACTSTBY".

For 5E8 and later, if PIDB TYPE is "PSU":

- the corresponding EQPSU form must have a matching PSU SHELF and the PSU SHELF 0/1 EQSTAT must be "O". An EQISLU form corresponds with an EQPSU form when the SM numbers are the same.
- there must be an EQPSUPH form with the same SWITCHING MODULE and PSU SHELF combination as this form.

For 5E10 and later, if PIDB TYPE is "PSU":

— neither the PSU SHELF SIDE 0 CLI or the PSU SHELF SIDE 1 CLI values may be 3 ("PSU" PIDB TYPEs cannot be associated with data fanout multiple PIDB PSU shelves).

For 5E12 and later, if PIDB TYPE is "PSU":

- PSU SHELF/DF POS assignments cannot be duplicated among the EQAIU, EQIDCU, and/or the EQISLU forms for specified SMs.

2.18 DATA GROUP

Description: **For 5E9(2) and earlier:** For PIDBs of type "DUAL" or "SHRD", enter the assigned DATA GROUP Number.

For 5E10 and later: Enter the Data interface number.
Valid Entries:
For 5E9(2) and earlier: 0 - 1
For 5E10 and later: 0 or 1 for an SM
or 0 to 5 for an SM-2000

Data Rules:

For PIDBs of type "PSU", leave this field blank.

For 5E10 and later, only SM-2000 SMs can use DATA GROUP values greater than 1.

For 5E10 and later, the combination of DATA GROUP 1 and DATA PORT 14 can not be assigned on the EQISLU forms whose corresponding EQIM form has a UNIT TYPE other than "SM-2000". Assigning this combination for SERVICE GROUP 0 automatically results in the combination of DATA GROUP 1 and DATA PORT 15 being assigned to SERVICE GROUP 1. The combination of DATA GROUP 1 and DATA PORT 15 is reserved for classic SMs.

2.19 DATA PORT

Copyright © 2006 Lucent Technologies

Description: For PIDBs of type "DUAL" or "SHRD", enter the Data Port Number.
Valid Entries:
For 5E9(2) and earlier: 0 - 15, even numbers only For 5E10 and later: 0 - 15 for an SM, or enter 0 - 23 for an SM-2000.

Data Rules:

For PIDBs of type "PSU", leave this field blank.

For 5E10 and later, only SM-2000 can use DATA PORT values greater than 15.

The following forms cannot have a duplicate Data Port assignment on the same Switching Module: EQDCLU (5810 Record), EQDS (5740 Record), EQDSC3 (5852 Record), EQDUP (5730-2), EQGDSC3 (5860 Record), EQIDCU (5846 Record), EQISLU (5731 Record), EQISTF (5823 Record), EQLU (5710 Record), EQPSU (5741 Record), EQRA (5821 Record), EQTU (5720 Record).

2.20 PSU SHELF

Description: For PIDBs of type "PSU", enter the PSU SHELF to which the PIDB is connected.
Valid Entries: 0 - 5

Data Rules:

For PIDBs of types other than "PSU", leave this field blank.

2.21 DF POS

Description: Enter the Data Fanout Position of the PIDB connection.
Valid Entries: 0 - 10

Data Rules:

For PIDBs of type "PSU", valid entries are 0 to 10. For PIDBs of types other than "PSU", leave this field blank.

VALID COMBINATIONS OF PIDB TYPE AND OTHER FIELDS

PIDB TYPE	DATA GROUP	DATA PORT	PSU SHELF	DF POS
DUAL	R	R (Note 2)	P	P
PSU	P	P	R	R (Note 1)
SHRD	R	R (Note 2)	P	P

Note 1: Valid values 0 - 5.
Note 2: Even numbered DATA PORTS only.

R = Required
P = Prohibited
Figure 1 VALID COMBINATIONS OF PIDB TYPE AND OTHER FIELDS

```
SCREEN 1 OF 2                    5ESS Switch
eqislu                    OFFICE DATA ADMINISTRATION
(5731)              INTEGRATED SERVICES LINE UNIT EQUIPAGE
```

```
*1. SWITCHING MODULE   ___
*2. ISLU NUMBER        __

#3. UNIT TYPE          _____           #9. COMMON CONTROL EQST O
#4. CONTROL GROUP      _              #10. COMMON DATA EQST    O
#5. CONTROL PORT       __             #11. COMMON CONTROL CLI  ________
#6. EQUIPMENT BAY      ___            #12. COMMON DATA CLI     ________
#7. EQUIPMENT VERTICAL __             #13. D-CHANNEL TYPE      PSU
#8. EQUIPMENT AISLE    ____           #14. CD CONFIGURATION    ________
```

```
SCREEN 2 OF 2                    5ESS Switch            _
eqislu                     OFFICE DATA ADMINISTRATION
(5731)              INTEGRATED SERVICES LINE UNIT EQUIPAGE


15. PIDBs             17.     18.     19.    20.    21.
              PIDB   PIDB    DATA    DATA   PSU    DF
        row    NO.   TYPE    GROUP   PORT   SHELF  POS
         1      0    _____     _      __      _     __
         2      1    _____     _      __      _     __
         3      2    _____     _      __      _     __
         4      3    _____     _      __      _     __
         5      4    _____     _      __      _     __
         6      5    _____     _      __      _     __
         7      6    _____     _      __      _     __
         8      7    _____     _      __      _     __
         9      8    _____     _      __      _     __
        10      9    _____     _      __      _     __
        11     10    _____     _      __      _     __
        12     11    _____     _      __      _     __
```

Figure 2 SAMPLE EQISLU FORM 5E14 AND EARLIER SOFTWARE RELEASES

```
eqislu                            5ESS Switch
SCREEN 1 OF 2              OFFICE DATA ADMINISTRATION
(5731)              INTEGRATED SERVICES LINE UNIT EQUIPAGE

*1. SWITCHING MODULE ___          10. COMMON CONTROL EQST_ O
*2. ISLU NUMBER      __           11. COMMON DATA EQST     O
                                 #12. COMMON CONTROL CLI   ________
#3. UNIT TYPE          _____     #13. COMMON DATA CLI      ________
 4. INTF UNIT          0          14. D-CHANNEL TYPE       PSU
#5. CONTROL GROUP      _         #15. CD CONFIGURATION     ________
#6. CONTROL PORT       __
#7. EQUIPMENT BAY      ___
#8. EQUIPMENT VERTICAL __
#9. EQUIPMENT AISLE    ____
```

```
eqislu                              5ESS Switch            _
SCREEN 2 OF 2              OFFICE DATA ADMINISTRATION
(5731)               INTEGRATED SERVICES LINE UNIT EQUIPAGE

                           16. PIDBs (PIDB)

    PIDB PIDB DATA  DATA PSU   DF      PIDB PIDB DATA  DATA PSU   DF
ROW NO   TYPE GROUP PORT SHELF POS ROW NO   TYPE GROUP PORT SHELF POS
 1   0   _____  _    __    _   __    7   6  _____  _    __    _   __
 2   1   _____  _    __    _   __    8   7  _____  _    __    _   __
 3   2   _____  _    __    _   __    9   8  _____  _    __    _   __
 4   3   _____  _    __    _   __   10   9  _____  _    __    _   __
 5   4   _____  _    __    _   __   11  10  _____  _    __    _   __
 6   5   _____  _    __    _   __   12  11  _____  _    __    _   __
```

Figure 3 SAMPLE EQISLU FORM 5E15 AND LATER SOFTWARE RELEASES

Copyright © 2006 Lucent Technologies

SEC. 19: 5732 RECORD
REMOTE INTEGRATED SERVICES LINE UNIT
EQUIPAGE FORM - EQRISLU

1. GENERAL

The EQRISLU form (Remote Integrated Services Line Unit Equipage (5732 Record)) is available with 5E3 and later Software Releases. It is used to define Remote Integrated Services Line Unit assignments in a 5ESS Switch.

For 5E10 and later, when the OE defined on a DSLAP form or LCEN defined on an OSPSDSL form or the DSL OE defined on a DSL form are associated with an EQRISLU form, the DSL, DSLAP or OSPSDSL input forms must not have the D TIMESLOT or B TIMESLOT information assigned.

For 5E10 and later, when the DSL, DSLAP and OSPSDSL forms have unassigned D TIMESLOTs and/or B TIMESLOTS, ODA assigns these values. The ODA assignment requires that LCENs (DSL OE on the DSL form) assigned to LGCs 0 - 7 (Note: the fifth and sixth digit of the LCEN/DSL OE is the LGC) get timeslots on odd numbered EQISLU PIDBs and that LCENs assigned to LGCs 8 thru 15 get timeslots on even numbered EQISLU PIDBs, each with a PIDB TYPE of "PSU". If there are either no odd numbered PIDBs for LGC 0 - 7 or even numbered PIDBs for LGC 8 - 15 on this ISLU, a cross check error occurs.

1.1 Recent Change View

The corresponding Recent Change View for this form is 22.9.

2. FORM AND RECORD ENTRIES

2.1 BASE AND CONTROL, ESS UNIT

Enter the Base and Control Number and Office Name on each record.

2.2 * SWITCHING MODULE

Description: Enter the Switching Module Number.

Required Field.
Valid Entries: 1 - 192

Data Rules:

Each Switching Module entered on this form must be defined on an EQIM form (5700-1 Record). For 5E4(2) and later, the value must be defined on an EQIM form with the CONFIGURATION field set to "LOADED". For 5E9(2) and later, the value entered must be a configuration that supports RIS (Remote Integrated Services). See the Configurations for Facilities and Applications table in Division 8, Section 2.

For 5E9(1) and later, each SM (Switching Module) can have up to 5 PSU Shelfs. Each Shelf can have up to 16 PH (Protocol Handlers). Shelfs and PHs are defined by the first 3 digits of the ISCN field. Each PH can be assigned up to 32 timeslots. PH time slot for On Demand B Channel, Packet BChannel, Packet D Channel, EDSL, IFOPER, and IFTERM can be assigned on the following forms:

AMLBDSL
DSL
DSLAP

Copyright © 2006 Lucent Technologies

DSLUSR
MISLINK
OSPSDSL
RTERM
TRUNK
XAT

The following data rule is not executed on an SM-2000, because provisioning of nailed-up time slots is not required on an SM-2000. On a PSU1 , each Data Interface in a SM can have a maximum of 128 nailed-up time slots reserved for the following applications:

Data Interface for Nailed-up Timeslots

Application	Definition
EDSL	Defined by setting TRKCLS equal to "EDSL" on the TKGRP form and defining members on TRUNK forms.
IFOPER	Defined by setting TRKCLS equal to "IFOPER" on the TKGRP form and defining members on TRUNK forms.
IFTERM	Defined by setting TRKCLS equal to "IFTERM" on the TKGRP form and defining members on TRUNK forms.
ISM	Defined on the PSISM forms.
IP	Defined by setting TRKCLS equal to "PACKET" on the TKGRP form and defining members on TRUNK forms.
PKTPIPE	Defined by setting TRKCLS equal to "PKTPIPE" on the TKGRP form and defining members on TRUNK forms (CMDA application).
RISLU B Channel	Defined on the DSL/AMLBDSL forms where the first 3 digits of LCEN match SM on an EQRISLU form.
RISLU D Channel	Defined on the DSL/DSLAP/MISLINK/OSPSDSL forms where the first 3 digits of LCEN (on the DSLAP or OSPSDSL form) or OE (on the DSL or MISLINK form) match SM on an EQRISLU form.
SPCHNDLR	Defined by setting TRKCLS equal to "SPCHNDLR" on the TKGRP form and defining members on TRUNK forms (CMDA application).
X.25	Defined on the XAT forms.
X75	Defined by setting TRKCLS equal to "X75" on the TKGRP form and defining members on TRUNK forms.
X75P	Defined by setting TRKCLS equal to "X75P" on the TKGRP form and defining members on TRUNK forms.

These time slots can be reserved by entering the rows RPTSS0 to RPTSS7 on the EQPSU form. The quantity of time slots reserved (i.e. the number entered) must be greater than or equal to the quantity of time slots assigned for the above applications. Note that a D channel only takes a quarter of a time slot.

Also, the reserved time slots must be entered such that for any given SHELF, (defined by the first digit of ISCN field or by the SHELF field on the MISLINK form), the time slots assigned to that SHELF must not be duplicated in the same vertical (column) position if they appear in more than one row (RPTSS0 through RPTSS7).

2.3 *RISLU NUMBER

Description: Enter the RISLU Number.

Required Field.
Valid Entries: 0 - 7

Data Rules:

RISLUs share the same unit number range with ISLUs, Line Units, and IDCUs. Therefore, unit numbers

assigned on this form may not be assigned on any EQISLU, EQLU, or EQIDCU form with the same SM number.

2.4 #RISLU SITE

Description: Enter the Remote Integrated Services Line Unit Site Number.

Required Field.
Valid Entries: 500 - 999

Data Rules:

The RISLU SITE must be defined on a RISITE form (5902 Record).

2.5 #HOST DLTU

Description: Enter the Remote Integrated Services Line Unit Digital Line/Trunk Unit Number.

Required Field.
Valid Entries: 0 - 5

Data Rules:

Only two matching entries are allowed per SM indicating that only two RISLUs can be hosted on an SM/DLTU.

This DLTU must be defined on an EQDU form (5730 Record) with a DIGITAL LINE/TRUNK UNIT TYPE of "DLTURH" in the same SM.

2.6 INTF UNIT

Description: The Interface Unit field was added to support the 5E15 Optically Extended Control and Data Unit feature. It is a Recent Change only field. See Division 2, Section 9V.
Valid Entries: 0 - 8

Data Rules:

When INTF UNIT is greater than 0, it must be defined on the EQXCDU form (5853 Record) for the same Switching Module. In addition, the EQSTAT value on the EQCI must not exceed the MOD CTL SG0/1 EQSTAT on the EQXCDU form. (EQSTAT of "O" is greater than EQSTAT of "G", and EQSTAT of "G" is greater than EQSTAT of "U".)

2.7 #COMMON CONTROL GROUP

Description: Enter the Control Group Number of the PICB that is being remoted to the RISLU via a DFI-H1. Both sides (Service Groups) are defined by the same input form so the value entered here represents the assigned Control Group for both Service Groups.

Required Field.
Valid Entries: 0 and 1

2.8 #COMMON CONTROL PORT

Description: Enter the Control Port Number (Service Group 0) of the PICB that is being remoted to the RISLU via a DFI-H1. Since Side 0 and Side 1 require Consecutive Control Port Numbers on the same Control

Copyright © 2006 Lucent Technologies

Group, the value for Side 1 will be inferred from the value entered here for Side 0.

Required Field.
Valid Entries: even numbers in the range 0 to 20

Data Rules:

Control Port 22 is not allowed since the next higher port assigned to Side 1 would be 23, which is not a valid assignment.

Control Ports 0 and 1 cannot be assigned to Control Group 0 since Control Group 0, Ports 0 and 1 are reserved for the Local Digital Service Unit (DSU).

The COMMON CONTROL GROUP and COMMON CONTROL PORT combination must be unique, for the given SWITCHING MODULE, within the 5ESS Switch.

2.9 #EQUIPMENT BAY

Description: Enter the Equipment Location Bay number.

Required Field.

Software Release: 5E4(2) and later
Valid Entries:
For 5E4(2) only: 0 - 4
For 5E5 only: 0, 2, 3, 4
For 5E6 and later: 0 - 4

2.10 #EQUIPMENT AISLE

Description: Enter the Equipment Aisle Number.

This entry consists of a floor and aisle number. The first and second digits from the left are the floor number. Valid floor numbers are 00 to 99. The third and fourth digits from the left are the aisle number. Valid aisle numbers are 00 to 99. It is recommended that floor 00 be used for equipment located in the basement per floor plan designation. The EQUIPMENT BAY and EQUIPMENT AISLE combination must be unique, for the given SWITCHING MODULE, within the 5ESS Switch.

Software Release: 5E4(2) and later
Required Field.
Valid Entries: 00 - 99

2.11 #CD CONFIGURATION

Description: Enter the Common Data Configuration.

For OSPS (Operator Service Position System) applications, the option "SPROSPS" designates that one of the RISLU remoting facilities be used as a spare, whereas the option "ROSPS" implies that there will be no spare remoting facility. Use of a spare facility is STRONGLY RECOMMENDED (option "SPROSPS"). If no spare facility is provided, then service disruption will occur whenever a facility carrying traffic is removed from service, whether due to a fault or manual request. The choice of providing a spare facility can be made ONLY when the RISLU is initially configured; that is, Recent Change CANNOT be used to update the Common Data Configuration option on a RISLU already configured in the system.

Copyright © 2006 Lucent Technologies

If the "SPROSPS" option is engineered for eight active plus one standby DFI pairs, diagnostic phases 11 and 20 of the spare DFI diagnostics will output the CATP (Conditional All Tests Pass) output message which indicates that all tests were not performed to avoid impact to customer service.

Valid CD CONFIGURATION Entries

Entry	Description
RACTSTBY	
ROSPS	RISLU active standby, OSPS application.
SPROSPS	RSILU active standby, OSPS with sparing.

Data Rules:

If the "SPROSPS" option is selected, all DFI-H1s and DFI-H2s must be connected to the same DI board (DATA GROUP on the EQDUP form - 5730 Record), and they must all have the same stuff code pattern (STUFFING PATTERN on the EQDUP form). This is a required form.

If RISLU is to be configured as a Universal RISLU (non-OSPS), "RACTSTBY" must be specified.

RISLU OSPS applications are identified by the assignment of "ROSPS" or "SPROSPS" to the CD CONFIGURATION field of the EQRISLU form. Any and all D channels on an OSPS application will be mapped internally according to the following rules.

- The D channel assignments for RISLUs which are associated with OSPS are grouped, internally, into piggy-back groups. D channels which are in a piggy-back group will share time slots. D channels which are not in the same piggy-back group can not share timeslots.
- D channels are grouped together in threes (three to a time slot) if the HOST/REM DFIs have "ZCS" signaling (DFI MODE on the EQDUP form). Otherwise the D channels are grouped four to a time slot.
- D channels are in the same piggy-back group if they are assigned in the same SM, RISLU, LGC, if the first 3 digits of the ISCN are identical and if the LC number is grouped 0 - 7, 8 - 15, 16 - 23 or 24 - 31 (eg: LC 3 and 6 are in the same group, LC 9 and 17 are not). D channels should be packed (in the same piggy-back group) if possible. If they are not packed, an excessive number of time slots may be used.

2.12 #COMMON CONTROL EQST

Enter the Equipment Status of the RISLU's Common Control Boards (both Common Control Boards have the same status).

Required Field.

Valid COMMON CONTROL EQST Entries

Entry	Description
U	Unequipped.
G	Growth.
O	Operational.

Data Rules:
New 5ESS Switches and units being added for factory testing require the Operational state.

If these boards are equipped in Service Group 1 (COMMON CONTROL GROUP is 1 on this form), the Equipment Status value cannot be greater than the CONTROL GROUP 1 STATUS value entered on the EQIM form. The hierarchy of Equipment Status, from lowest to highest, are Unequipped, Growth and Operational.

Copyright © 2006 Lucent Technologies

2.13 #COMMON DATA EQST

Description: Enter the Equipment Status of the RISLU's Common Data Boards (both Common Data Boards have the same status).

Required Field.

Default value: O (Operational)

Valid COMMON DATA EQST Entries

Entry	Description
U	Unequipped.
G	Growth.
O	Operational.

Data Rules:

New 5ESS Switches and units being added for factory testing require the Operational state. During off-line ODA database retrofits, values other than "O" may exist. If they do exist, the EQST entered here must be lower than or equal to the COMMON CONTROL EQST.

If these boards are equipped in Service Group 1 (COMMON CONTROL GROUP is 1 on this form), the Equipment Status value cannot be greater than the CONTROL GROUP 1 STATUS value entered on the EQIM form.

The hierarchy of Equipment Status, from lowest to highest, are Unequipped, Growth and Operational. If the COMMON CONTROL EQST is "U", the COMMON DATA EQST must be "U". If COMMON CONTROL EQST is "G", then either "U" or "G" must be entered.

2.14 #REMOTE CLOCK EQST

Description: Enter the Equipment Status of the RISLU Remote Clock Boards (both boards have the same status).

Required Field.
Default: O (Operational)
Valid Entries:

Valid REMOTE CLOCK EQST Entries

Entry	Description
U	Unequipped.
G	Growth.
O	Operational.

Data Rules:

New 5ESS Switches and units being added for factory testing require the Operational state. During off-line ODA database retrofits, values other than "O" may exist. If they do exist, the EQST entered here must be lower than or equal to that of the DFI-H1 pack remoting the COMMON CONTROL PICB.

If these boards are equipped in Service Group 1 (COMMON CONTROL GROUP is 1 on this form), the Equipment Status value cannot be greater than the CONTROL GROUP 1 STATUS value entered on the EQIM form.

Furthermore, the Equipment Status of the Remote Clock boards cannot be greater than the EQUIPMENT STATUS value entered on the EQDUP form (5730 Record).

Copyright © 2006 Lucent Technologies

The hierarchy of Equipment Status, from lowest to highest, are Unequipped, Growth and Operational.

2.15 #COMMON CONTROL CLI

Description: Enter the Change Level Indicator for the Common Control Boards (both boards must have the same CLI).

Required Field.
Valid Entries: 0 to 7FFFFFFF (hexadecimal).

For a complete listing of valid CLI values, J-Drawing and list combinations, see Division 8, Section 1.

2.16 COMMON DATA CLI

Description: Enter the Change Level Indicator for the Common Data Boards (both boards must have the same CLI).

Required Field.
Valid Entries: 0 to 7FFFFFFF (hexadecimal).

For a complete listing of valid CLI values, J-Drawing and list combinations, see Division 8, Section 1.

2.17 REMOTE CLOCK CLI

Description: Enter the Change Level Indicator for the RISLU Remote Clock Boards (both boards must have the same CLI).

Required Field.
Valid Entries: 0 to 7FFFFFFF (hexadecimal).

For a complete listing of valid CLI values, J-Drawing and list combinations, see Division 8, Section 1.

2.18 PIDBs

Description: Enter the Peripheral Interface Data Buses.

Each of the two Common Data Boards on each side (Service Group) of the RISLU provide for termination of 6 PIDBs. The relative PIDB numbers are 0 to 5 on CD 1 and 6 to 12 on CD 2 (on each side). There is no indication of the CD number on the input form, since both CDs are always equipped. PIDBs are to be equipped in pairs with the same relative PIDB NO. on the two sides. The entries on this form are for Side 0 only, since the assignments for Side 1 can be inferred from the assignments for Side 0. PIDB NO. 0 and 1 are always required, and their respective HOST DFI PACK POS values must be between 1 and 4. Their respective REM. DFI PACK values must be between 1 and 2.

PIDB NO. 2 to 11 must have HOST DFI PACK POS values, if entered, between 5 and 16. Their respective REM. DFI PACK values, if entered, must be between 3 and 12.

The HOST DFI PACK POS and REM. DFI PACK values must be unique.

2.19 HOST DFI PACK POS

Description: Enter the Pack Position (within the DLTU-RH) of the DFI-H1 or DFI-H2 that is remoting the PIDB to the RISLU.

Copyright © 2006 Lucent Technologies

Valid Entries: 1 - 16.

Data Rules:

PIDB NO. 0 and 1 requires a DFI-H1 pack, and this pack must be in pack position 1-4. PIDB Nos. 2 to 11 are optionally equipped with DFI-H2 packs and these packs must be in pack positions 5-16. A DLTU-RH can accommodate up to 16 DFIs and 4 DFI-H1s (2 RISLUS) and up to a total of 12 DFI-H2s. The same DFI pack cannot use more than one PIDB.

The DFI-H1 and DFI-H2 packs have the following requirements:

All RISLU DFI packs on this RISLU must appear on the same DLTU-RH (HOST DLTU on this form).

All RISLU DFI Packs on this RISLU must have the same DFI TRANSMISSION MODE defined on an EQDUP form.

RISLU DFI packs must have the STUFFING PATTERN on the EQDUP form spread uniformly across the DFIs assigned to a particular RISLU with the exception of RISLUs with the OSPS sparing option (CD CONFIGURATION is "SPROSPS") which must have the same STUFFING PATTERN for all DFIs on a RISLU.

For 5E10 and later, HOST DFI PACK POS values must be in ascending order (packs must be assigned from left to right in the frame).

2.20 REM. DFI PACK POS

Description: Enter the Pack Position of the DFI-R1 or DFI-R2 (at the RISLU site) that carries the PIDB. Each DFI-H1 requires a DFI-R1 and each DFI-H2 requires a DFI-R2. They are equipped in matching pairs with each set remoting the same PIDB.
Valid Entries: 1 - 12

Data Rules:

PIDB Nos. 0 and 1 must have DFI-R1 packs in pack position 1-2. PIDB Nos. 2-4 must have DFI-R2 packs in pack position 3-12.

For a given PIDB NO., the user must enter both the HOST DFI PACK POS and the REM. DFI PACK POS or the user must not enter both. An entry in only one of the fields is not permitted.

For 5E10 and later, REM. DFI PACK POS values must be in ascending order (packs must be assigned from left to right in the frame).

```
eqrislu                          5ESS Switch            _
(5732)                     OFFICE DATA ADMINISTRATION
                REMOTE INTEGRATED SERVICES LINE UNIT EQUIPAGE
* 1. SWITCHING MODULE      001            16. PIDBs      17.        18.
* 2. RISLU NUMBER          2                    PIDB   HOST DFI   REM. DFI
# 3. RISLU SITE            500            row    NO.   PACK POS   PACK POS
# 4. HOST DLTU             0               1      0       01         01
# 5. COMMON CONTROL GROUP  0               2      1       02         02
# 6. COMMON CONTROL PORT   00              3      2       __         __
# 7. EQUIPMENT BAY         2               4      3       __         __
```

```
# 8. EQUIPMENT AISLE       0001            5      4       __          __
# 9. CD CONFIGURATION      RACTSTBY        6      5       __          __
#10. COMMON CONTROL EQST   O               7      6       __          __
#11. COMMON DATA EQST      O               8      7       __          __
#12. REMOTE CLOCK EQST     O               9      8       __          __
#13. COMMON CONTROL CLI    00000000       10      9       __          __
#14. COMMON DATA CLI       00000000       11     10       __          __
#15. REMOTE CLOCK CLI      00000000       12     11       __          __
```

Figure 1 SAMPLE EQRISLU FORM 5E14 AND EARLIER SOFTWARE RELEASES

```
eqrislu                            5ESS Switch
SCREEN 1 OF 2              OFFICE DATA ADMINISTRATION
(5732)           REMOTE INTEGRATED SERVICES LINE UNIT EQUIPAGE

 *1. SWITCHING MODULE     ___          13. REMOTE CLOCK EQST  O
 *2. RISLU NUMBER         _           #14. COMMON CONTROL CLI _________
 #3. RISLU SITE           ___         #15. COMMON DATA CLI    _________
 #4. HOST DLTU            __          #16. REMOTE CLOCK CLI   _________
    INTF UNIT            0
  #6. COMMON CONTROL GROUP _
 #7. COMMON CONTROL PORT  __
 #8. EQUIPMENT BAY        _
 #9. EQUIPMENT AISLE      ____
#10. CD CONFIGURATION     _________
 11. COMMON CONTROL EQST  O
 12. COMMON DATA EQST     O
```

```
eqrislu                            5ESS Switch            _
SCREEN 2 OF 2              OFFICE DATA ADMINISTRATION
(5732)           REMOTE INTEGRATED SERVICES LINE UNIT EQUIPAGE

                       17. PIDB

    PIDB HOST DFI REM. DFI     PIDB HOST DFI REM. DFI
ROW NO   PACK POS PACK POS ROW NO   PACK POS PACK POS
 1   0      __       __      7   6     __       __
 2   1      __       __      8   7     __       __
 3   2      __       __      9   8     __       __
 4   3      __       __     10   9     __       __
 5   4      __       __     11  10     __       __
 6   5      __       __     12  11     __       __
```

Figure 2 SAMPLE EQRISLU FORM 5E15 AND LATER SOFTWARE RELEASES

Copyright © 2006 Lucent Technologies

SEC. 20: 5733 RECORD
(REMOTE) INTEGRATED SERVICES LINE UNIT
LINE GROUP CONTROLLER EQUIPAGE FORM - EQLGC

1. GENERAL

The 5733, (Remote) Integrated Services Line Unit Line Group Controller Equipage Record, is available with 5E4, Issue 1 and later Software Releases. It is used to define the Line Group Controllers equipped on Remote or Local Integrated Services Line Units in a 5ESS Switch.

2. FORM AND RECORD ENTRIES

2.1 BASE AND CONTROL, ESS UNIT

Enter the Base and Control Number and office name on each record.

2.2 * SWITCHING MODULE

Description: Enter the Switching Module number.
Valid Entries: 1 - 192.

Data Rules:

Each Switching Module entered on this form must be defined on the EQIM form.

2.3 * (R)ISLU NUMBER

Description: Enter the Integrated Services Line Unit (ISLU) or Remote Integrated Services Line Unit (RISLU) number.
Valid Entries: 0 - 7.

Data Rules:

Any value entered here must have a corresponding entry on the EQISLU or EQRISLU input form.

For 5E10 and later, ISLU numbers on the EQLGC form must either be defined on the EQISLU or the EQRISLU form, or be defined on an EQISLU form with a UNIT TYPE other than "ISLU".

LINE GROUP CONTROLLERS

Up to sixteen Line Group Controllers (LGCs) can be equipped on each ISLU or RISLU. For each equipped LGC, enter the following fields.

2.4 EQST

Description: Enter the equipment status of the LGC.

Valid EQST Entries

Entry	Description
U	Unequipped.
G	Growth.
O	Operational.

Data Rules:

Copyright © 2006 Lucent Technologies

New offices and equipment additions require the Operational status. During off-line ODA database retrofits, values other than "O" may exist; but if they do, the EQST value entered here must be lower than or equal to the COMMON DATA EQST value on the EQISLU or EQRISLU form. The hierarchy of equipment status, from lowest to highest, are Unequipped, Growth and Operational.

2.5 CLI

Description: Enter the Change Level Indicator of the LGC. For a complete listing of valid CLI values, J-Drawing and list combinations, see Division~8, Section~1.
Valid Entries: 0 - 7fffffff (hexadecimal).

```
eqlgc                              5ESS Switch              _
(5733)                       OFFICE DATA ADMINISTRATION
                       (R)ISLU LINE GROUP CONTROLLER EQUIPAGE

* 1. SWITCHING MODULE   010
* 2. (R)ISLU            0

  LINE GROUP CONTROLLERS
   4.          6.      7.            8.          10.     11.
  row   LGC   EQST    CLI           row   LGC   EQST     CLI
   1     0     O    00000000         9     8      _    ________
   2     1     O    00000000        10     9      _    ________
   3     2     O    00000000        11    10      _    ________
   4     3     O    00000000        12    11      _    ________
   5     4     O    00000000        13    12      _    ________
   6     5     _    ________        14    13      _    ________
   7     6     _    ________        15    14      _    ________
   8     7     _    ________        16    15      _    ________
```

Figure 1 SAMPLE INTEGRATED SERVICES LINE UNIT LINEGROUP CONTROLLER FORM 5E8 AND LATER SOFTWARE RELEASES

SEC. 21: 5740 RECORD
DIGITAL SERVICE UNIT EQUIPAGE FORM (EQDS)
DIGITAL SERVICE UNIT PACK EQUIPAGE FORM (EQDSP)
DIGITAL SERVICE UNIT 2 PACK EQUIPAGE FORM (EQDS2P)

1. GENERAL

The 5740 Record is available with the 5E2 and later Software Releases. It is used to define DSU (Digital Service Unit) assignments. Each DSU must have unique Equipment Bay and Vertical Equipment locations per Interface Module.

1.1 Recent Change View

The Recent Change View for this form is 18.0.

2. FORM ENTRIES FOR DIGITAL SERVICE UNIT EQUIPAGE - EQDS

2.1 BASE AND CONTROL, ESS UNIT

Enter the Base and Control Number and the Office Name on each record.

2.2 *INTERFACE MODULE

Description: Enter the Interface Module (i.e., Switching Module) Number.

Required Field.
Valid Entries: 1 - 192.

Data Rules:

Equipment units within the same SM must be assigned to unique Equipment Bay and Vertical Position values.

2.3 *DIGITAL SERVICE UNIT

Description: Enter the Digital Service Unit Number. This field is for GDSUs (Global DSUs) only as ODD (Office Dependent Data) for the Local DSU is automatically generated. Pack information for the Local DSU is defined on the EQDSP form.

Required Field.
Valid Entries: 0 -7

Data Rules:

No more than 128 GDSUs can be supported by the office.

2.4 *SERVICE GROUP

Description: Enter the Service Group Number.

Required Field.
Valid Entries: 0 or 1

Copyright © 2006 Lucent Technologies

2.5 EQUIPMENT STATUS

Description: Enter the status of the equipment.

Valid EQUIPMENT STATUS Entries

Entry	Definition
U	Unequipped.
G	Growth.
O	Operational.

Data Rules:

For new offices and units destined for factory testing, "O" is the only allowed value. During offline ODA database retrofits, the other values are valid.

2.6 INTF UNIT

Description: The Interface Unit field was added to support the 5E15 Optically Extended Control and Data Unit feature. This is a Recent Change only field. See Division 2, Section 9V.
Valid Entries: 0 -8

Data Rules:

The SM/INTF UNIT/DATA GRP combinations entered on this form must be defined on a EQDI form or a EQXCDU form. Also, the EQSTAT on the matching EQDI or EQXCDU form must be greater than or equal to the equipment status value ("O", "G", or "U") on this form (e.g., "O" is greater than "G" which is greater than "U"). Note also that when INTF UNIT is greater than 0 and DATA GRP is 0, these Data Groups are defined on the EQXCDU form.

2.7 CONTROL GROUP

Description: Enter the Control Group Number.

Required Field.
Valid Entries: 0 or 1

2.8 CONTROL PORT

Description: Enter the Control Port Number.

Required Field.
Valid Entries: 0 - 22.

Data Rules:

CONTROL PORT numbers entries must be unique per SM.

2.9 DATA GROUP

Description: Enter the Data Group Number. These entries must be unique per SM.

Required Field.
Valid Entries: 0 or 1

2.10 DATA PORT

Copyright © 2006 Lucent Technologies

Description: Enter the Data Port number.

Required Field.
Valid Entries: 0 - 15

Data Rules:

Data Port numbers must be unique per SM.

2.11 EQUIPMENT BAY

Description: Enter the location of the Equipment Bay.

Required Field.
Valid Entries:
5E9(1) and earlier: 0 - 4

Valid EQUIPMENT BAY Entries,5E9(2) and later

Entry	Definition
0 - 14	SMC aisle.
100 - 014	Back panel; wiring position.
200 - 208	Front panel; door position.

Data Rules:

If 1 is entered, UNIT TYPE on the EQIM form (5700 Record) must be "MCTU3", "SMPU3", "SMPU4", or an SM-2000 class processor.

2.12 UNIT VERTICAL

Description: Enter the locations of the Vertical Unit which specifies the bottom of the unit.

Required Field.

Valid UNIT VERTICAL Entries, 5E9(1) and earlier

Entry	Definition
15 - 58	6 foot cabinets.
22 - 70	7 foot cabinets.

Valid UNIT VERTICAL Entries, 5E9(2) and later

Entry	Definition
7 - 58	6 foot cabinets.
22 - 70	7 foot cabinets.

Data Rules:

Locations of the Vertical Units must be identical for all of the same DSU and IM Service Groups.

2.13 EQUIPMENT AISLE

Description: Enter the Equipment Aisle Number. This entry consists of a floor and aisle number. The first and second digits, from the left, are the floor number. Valid floor numbers are 00-99. The third and fourth digits, from the left, are the aisle number. Valid aisle numbers are 00-99. It is recommended that floor 00 be used for equipment located in the basement per floor plan designation.

Required Field.

Copyright © 2006 Lucent Technologies

Valid Entries: 0000 - 9999

2.14 DSU COMMON CIRCUIT CLI

Description: Enter the Digital Service Unit Common Circuit Change Level Indicator. This circuit is provided as part of the basic unit per Service Group.

Required Field.
Valid Entries: 0 - 7FFFFFFF (hexadecimal)

Data Rules:

For a complete listing of valid CLI values, J-Drawing and list combinations, see Division 8, Section 1.

3. FORM ENTRIES FOR DIGITAL SERVICE UNIT PACK EQUIPAGE - EQDSP

3.1 *INTERFACE MODULE

Description: Enter the Interface Module Number.

Required Field.
Valid Entries: 1 - 192

Data Rules:

The INTERFACE MODULE (Switching Module) value entered on this form must equal the INTERFACE MODULE value entered on the EQDS form (5740 Record).

This value must be defined on the EQIM form (5700 Record).

3.2 *DIGITAL SERVICE UNIT

Description: Enter the Digital Service Unit number. This field is for Local and Global Digital Service Units for EQDSP.

Required Field.
Valid Entries: 0 - 7

Data Rules:

The DSU value entered on this form must equal the DSU value entered on the EQDS form (5740 Record).

Global DSU's must be numbered consecutively beginning with 1 for each IM on the EQDS form.

3.3 *SERVICE GROUP

Description: Enter the Service Group Number.

Required Field.
Valid Entries: 0 or 1

Data Rules:

The SERVICE GROUP value entered on this form must equal the SERVICE GROUP value entered on the

Copyright © 2006 Lucent Technologies

EQDS form (5740 Record).

PACK

The following fields (Section 3.4 - Section 3.9) define the circuit packs associated with the DSU.

3.4 POSITION

Description: Enter the pack position.
Valid Entries: 0 - 7

Data Rules:

If an entry is made in either POSITION, TYPE, STATUS, CLI or CLEI, then POSITION, TYPE, STATUS, CLI and CLEI must all have an entry for each equipped pack.

3.5 TYPE

Description: Enter the Circuit Type (Hardware) for each Pack Position.

Valid TYPE Entries

Entry	Definition
UTD2	2 Circuit Universal Tone Decoder Pack.
UTD4	4 Circuit Universal Tone Decoder Pack.
UTG	Universal Tone Generator.
RVPT	Revertive Pulsing Transceiver Pack (2-way).
TTFRESP	Transmission Test Facility Responder.
TTFPROC	Transmission Test Facility Processor.
TTFTGEN	Transmission Test Facility Tone Generator.
CONF2	2-circuit Conference Pack.
CONF5	5-circuit Conference Pack.
TTFINTF	Transmission Test Facility Interface Board.
UCC1032	6-Port Conference Pack.

Data Rules:

For Local Digital Service Units, "UTD2", "UTD4", "UTG", and "RVPT" above are the only Pack Types permitted.

Each Service Group on the Local Digital Service Unit must have one "UTG" pack, and at least one "UTD2", or "UTD4" pack, and a maximum of one "RVPT".

With 5E2 and later Software Releases, Service Group 0 and 1 are not required to have the same number of UTD Circuits in each as long as they are off by only one. An "RVPT" pack should be provided on each Service Group of the LDSU servicing Revertive Pulsing Trunks. The "UTG" pack should be located in pack Position 0 with the "UTD2", and "UTD4" packs starting in pack Position 1. The RVPT pack must be located in pack Position 7.

The total number of UTD circuits ("UTD2" equals 2 circuits/packs; "UTD4" equals 4 circuits/packs) plus the number of equipped "RVPT" circuits (refer to CIRCUITS EQUIPPED in this section) must be equal to 32 or less.

If "UTG" or "RVPT" are entered, then CIRCUITS EQUIPPED must have an entry. For 5E5 and later Software Releases, if "RVPT" is entered, CIRCUITS EQUIPPED must be 2 through 24.

For each unique combination of INTERFACE MODULE and DIGITAL SERVICE UNIT, if SERVICE GROUP 0 (or 1) is equipped with one or more PACK TYPES of "RVPT", then SERVICE GROUP 1 (or 0) must also be

Copyright © 2006 Lucent Technologies

equipped with one or more PACK TYPES of "RVPT".

The "UTD2" packs must not be mixed with "UTD4" packs in the same Service Group or Digital Service Unit.

Global Digital Service Units are equipped with the Transmission Test Facility (TTF) and Conference Packs. The basic Transmission Test Facility consists of four packs, designated by "TTFPROC", "TTFTGEN", "TTFINTF", and "TTFRESP", with provision for two additional responders.

Conference Packs are equipped as follows:

A. Transmission test facilities with one or two responders. Three valid combinations are allowed:

1. 3 two-circuit conference packs only
2. 1 two-circuit conference pack; 1 six-port conference pack
3. 1 five-circuit conference pack

B. Transmission Test Facilities with three responders. Two configurations are allowed:

1. A maximum of two 2-circuit 3-port conference packs only
2. One 6-port conference circuit pack only

C. No Transmission Test Facilities. The following five combinations are allowed:

1. Five two-circuit 3-port conference circuits packs
2. Two five-circuit 3-port conference circuits packs
3. 3 two-circuit 3-port conference circuit packs; 1 6-port conference circuit
4. One two-circuit 3-port conference circuit pack; 2 6-port conference circuit packs
5. 1 6-port conference pack; 1 five-circuit 3-port conference circuit pack

3.6 STATUS

Description: Enter the status of the equipment.

Valid STATUS Entries

Entry	Description
G	Growth.
O	Operational.
U	Unequipped.

Data Rules:

For new offices and units destined for factory testing, "O" is the only allowed value. During offline ODA database retrofits, the other values are valid.

3.7 CIRCUITS EQUIPPED

Copyright © 2006 Lucent Technologies

Description: Enter the number of circuits to be equipped for this pack type. This entry is required only for pack types "UTG" and "RVPT". Both of these pack types have a maximum number of 32 equipable circuits per pack. However, they are equipped on a per circuit basis.
Valid Entries: 0 - 32

Data Rules:

For 5E5 and later Software Releases, the sum of equipped "UTG" circuits and the number of equipped "RVPT" circuits must be 32. If "UTG" or "RVPT" is entered, then CIRCUITS EQUIPPED must have an entry. If "RVPT" is entered, then CIRCUITS EQUIPPED must be 2 through 24.

For RVPT, 0 or 2-32 may be entered; 1 is not allowed.

3.8 CLI

Description: Enter the Common Level Indicator.
Valid Entries: 0 - 7FFFFFFF (hexadecimal)

Data Rules:

For a complete listing of valid CLI values, J-Drawing and list combinations, see Division 8, Section 1.

3.9 CLEI

Description: Enter the Common Language Equipment Identification. See the appropriate J-Drawing for applicable CLEI codes.

4. FORM ENTRIES FOR DIGITAL SERVICE UNIT 2 PACK EQUIPAGE - EQDS2P

The DSU2-LDSUF (Digital Service Unit Model 2-Local Digital Service Unit Function) is applicable with 5E2 and later Software Releases and is a replacement of the original LDSU hardware (DSU1). The DSC (Digital Service Circuit) is the heart of the DSU2 architecture. This single circuit will perform all the functions of a service group of the LDSU. Each DSC of the DSU2-LDSUF has seven DSPs (Digital Signal Processors) on it. Each of these DSPs will perform a single function such as Tone Generation or Tone Decoder.

As of 5E4(2) and later Software Releases, this record is also used to assign CAMA (Centralized Automatic Message Accounting) tone decoder circuits for the OSPS (Operator Services Position System) toll and assistance feature.

If an incoming transfer CAMA trunk terminates on an SM, it should have a DSU2-LDSUF unit in the SM, and it should have a certain number of CAMA tone decoder circuits in both service groups of the DSU2-LDSUF unit of the same SM. CAMA tone decoder circuits are specified with a circuit type of "LDSU2CTD" on the EQDS2P form.

For 5E3 and later, this record is also used to assign Tone Transceiver circuits for the CCS (Common Channel Signaling) trunk signaling feature. If Common Channel Signaling (CCIS6 or ISUP7) trunks terminate on an SM, that SM must be equipped with a DSU2-LDSUF unit. The DSU2-LDUSF unit is typically equipped with five Tone Transceivers in each of its two Service Groups.

Tone Transceiver circuits are used to generate, loop back, and detect the tones used in Voice Path Assurance checks or Continuity Test calls over CCS trunks. The Tone Transceiver also provides VBDGs (Voice Band Data Generators) as part of the Analog Message Waiting Indicator feature, and provides signaling for the ICLID (Individual Calling Line Identification) feature. The Analog Message Waiting Indicator

Copyright © 2006 Lucent Technologies

feature allows the called party to be notified of an incoming call by lighting an indicator on their analog phone set. The ICLID feature allows the called party to receive information about an incoming call or allows the calling party to prevent the delivery of their DN (Directory Number) to the terminating station set.

CAMA tone decoder circuits are used to decode the tone from a CAMA to identify whether the call is due to ANIF (Automatic Number Identification Failure) or ONI (Operator Number Identification).

4.1 *SWITCHING MODULE

Description: Enter the Switching Module Number.

Required Field.
Valid Entries: 1 - 192

Data Rules:

The entered SM value must be defined on the EQIM form (5700 Record).

4.2 *DIGITAL SERVICE UNIT 2

Description: Enter the Digital Service Unit Number for either the Local or Global Digital Service Unit for EQDSP. Global Digital Service Unit numbering begins with 1 for each Switching Module.

Required Field.
Valid Entries: 0 - 7

Data Rules:

DSU must be zero if TYPE is equal to "LDSU2TG", "LDSU2TD", "LDSU2TX", or "LDSU2CTD".

4.3 *SERVICE GROUP

Description: Enter the Service Group number.

Required Field.
Valid Entries: 0 or 1

DIGITAL SERVICE CIRCUITS (DSC)

The following fields (Section 4.4 - Section 4.8) define the Digital Service Circuits for the DSU2.

4.4 DSP

Description: Enter the Digital Signal Processor number.
Valid Entries: 0 - 6

Data Rules:

Each DSP must be unique.

Only one DSP can be assigned to "LDSU2TG" per Service Group, but a "LDSU2TG" is not required in each SG. "LDSU2TG", "LDSU2TD", "LDSU2TX", or "LDSU2CTD" DSPs must be equipped in consecutive DSP positions beginning with DSP 0.

Copyright © 2006 Lucent Technologies

4.5 TYPE

Description: Enter the Type of DSP.

Valid TYPE Entries

Entry	Description
LDSU2TG	DSU Model 2 Tone Generator.
LDSU2TD	DSU Model 2 Tone Decoder.
LDSU2TX	Software Release: 5E3 and later. DSU Model 2 Tone Transceiver. There must be a Tone Transceiver in each Service Group (SG0 and SG1) per SM.
LDSU2CTD	Software Release: 5E4(2) and later. DSU Model 2 CAMA Transfer Decoder DSP.
LDSU2VBS	Software Release: 5E9(2) and later. DSU Model 2 Voice Band Service.

4.6 STATUS

Description: Enter the status of the equipment.

Valid STATUS Entries

Entry	Definition
O	Operational.
G	Growth.
U	Unequipped.

Data Rules:

For new offices and units destined for factory testing, "O" is the only allowed value. During offline ODA database retrofits, the other values are valid.

4.7 CLI

Description: Enter a valid Common Level Indicator value.
Valid Entries: 0 - 7FFFFFFF (hexadecimal)

Data Rules:

For a list of valid CLI values, refer to Division 8, Section 1.

4.8 CIRCUITS EQUIPPED

Description: Enter the number of circuits to be equipped.

Valid CIRCUITS EQUIPPED Entries

Entry	Definition
1-5	
1-8	
1-10	For LDSU2CTD.
1-31	For LDSU2TG per DSP, where at least 9 per Service Group are required to complete calls and provide all system tones.

Data Rules:

Only one DSP may be assigned "LDSU2TG" per SG, but an "LDSU2TG" is not required in each SG.

For 5E9(1) and earlier, the seven DSPs located in the DSC can have a maximum of 31 "LDSU2TG" circuits, and a maximum of 30 "LDSU2TD", "LDSU2CTD", and "LDSU2TX" circuits, respectively or collectively.

Copyright © 2006 Lucent Technologies

However, if any DSPs are partially equipped with "LDSU2TD", "LDSU2TX," or "LDSU2CTD" circuits, it must be the last equipped DSP of that type.

For 5E9(2) and later, a maximum of 30 total equipped "LDSU2TD", "LDSU2CTD", "LDSU2TX", and "LDSU2VBS" circuits, are allowed.

```
eqds                              5ESS Switch            _
5740                        OFFICE DATA ADMINISTRATION
                          DIGITAL SERVICE UNIT EQUIPAGE



* 1.  INTERFACE MODULE         001
* 2.  DIGITAL SERVICE UNIT     1
* 3.  SERVICE GROUP            1
  4.  EQUIPMENT STATUS         O
  5.  CONTROL GROUP            0         6.  CONTROL PORT          17
  7.  DATA GROUP               1         8.  DATA PORT             10
  9.  EQUIPMENT BAY            2
  10. UNIT VERTICAL            24
  11. EQUIPMENT AISLE          0415
  12. DSU COMMON CIRCUIT CLI   00000000
```

Figure 1 SAMPLE EQDS FORM 5E6 AND LATER SOFTWARE RELEASES

```
eqds                              5ESS Switch            _
5740                        OFFICE DATA ADMINISTRATION
                          DIGITAL SERVICE UNIT EQUIPAGE



* 1.  INTERFACE MODULE         001
* 2.  DIGITAL SERVICE UNIT     1
* 3.  SERVICE GROUP            1
  4.  EQUIPMENT STATUS         O
  5.  CONTROL GROUP            0         6.  CONTROL PORT          17
  7.  DATA GROUP               1         8.  DATA PORT             10
  9.  EQUIPMENT BAY            2
  10. UNIT VERTICAL            24
  11. EQUIPMENT AISLE          0415
  12. DSU COMMON CIRCUIT CLI   00000000
```

Figure 2 SAMPLE EQDSP FORM 5E6 AND LATER SOFTWARE RELEASES

```
eqds                              5ESS Switch            _
                            OFFICE DATA ADMINISTRATION
(5740)                    DIGITAL SERVICE UNIT EQUIPAGE
```

```
 *1. INTERFACE MODULE       ___
 *2. DIGITAL SERVICE UNIT   _
 *3. SERVICE GROUP          _
  4. EQUIPMENT STATUS       O
 #5. CONTROL GROUP          _
 #6. CONTROL PORT           __
 #7. DATA GROUP             _
 #8. DATA PORT              __
 #9. EQUIPMENT BAY          _
#10. UNIT VERTICAL          __
#11. EQUIPMENT AISLE        ____
#12. DSU COMMON CIRCUIT CLI ________
```

Figure 3 SAMPLE EQDS2P FORM 5E14 AND EARLIER SOFTWARE RELEASES

```
eqds                            5ESS Switch            _
                          OFFICE DATA ADMINISTRATION
(5740)                   DIGITAL SERVICE UNIT EQUIPAGE

 *1. INTERFACE MODULE     001     #13. DSU COMMON CIRCUIT CLI ________
 *2. DIGITAL SERVICE UNIT 1
 *3. SERVICE GROUP        1
  4. EQUIPMENT STATUS     O
     INTF UNIT            0
 #6. CONTROL GROUP        _
 #7. CONTROL PORT         __
 #8. DATA GROUP           _
 #9. DATA PORT            __
#10. EQUIPMENT BAY        _
#11. UNIT VERTICAL        __
#12. EQUIPMENT AISLE      ____
```

Figure 4 SAMPLE EQDS FORM 5E15 AND LATER SOFTWARE RELEASES

Copyright © 2006 Lucent Technologies

SEC. 22: 5741-1/2 RECORD
PACKET SWITCHING UNIT EQUIPAGE FORM - EQPSU

1. GENERAL

The Packet Switching Unit Equipage Record 5741/5875is available with 5E3 and later Software Releases. It is used to define the PSUs equipped in a 5ESS Switch. For 5E5 and later, it is also used to reserve a pool of dedicated peripheral timeslots for the exclusive use of the PSU equipped in a 5ESS Switch.

The PSU houses the Protocol Handlers and switches packet type data. For 5E16(1) and earlier only one PSU may be equipped on any given SM (Switching Module), 5E16(1) and later, there can be more than one. For 5E20(1) and later, the EQPSU form is associated with Recent Change View 22.40 (5875) which is a new Recent Change View to grow in iPS PSUs. It is keyed by SM and PSU. EQPSU contains data for RC View 22.2 (5741) (non-IPS PSU unit data), Recent Change View 22.40 (5875) (iPS PSU unit data)For 5E5 and later, the equipment status of the Protocol Handler circuit is entered on the EQPSUPH form (5742 Record) in the EQST field. When an EQPSUPH form contains an EQST entry of "O" (Operational), all eight possible days must be defined on the PSRATE form (5922 Record) in order to define billing. Conversely, if no EQPSUPH form is operational, the following constraints must be observed in order to avoid system errors indicating invalid (improper sequence) provisioning conditions:

- MLHG form (5110 Record) must not be entered with HUNT TYPE set to "PSUCD" on the corresponding MLHGFD form (5604 Record),
- PSRATE form must not be entered,
- RTIDX form (5303 Record) must not be entered with DESTINATION PSN entered,
- TKGRP form (5202 Record) must not be entered with HUNT TYPE set to "PSUCD".

Refer to Division 2, Section 1BK for a discussion of these two issues.

For 5E10 and later, when TGN(s) are defined with a TRKCLS of "PACKET" on the TKGRP form, the Switching Module (the first three digits of DEN or NEN on the TRUNK form) that is associated with the TGN(s) must contain a PSU (Packet Switch Unit) defined on the EQPSU form.

For 5E10 and later, when TGN/MEMB(s) on the TRUNK form have a TRKCLS of "X75" or "X75P" on the associated TKGRP form, the SWITCHING MODULE that is associated with the TGN (DEN[1,3] or NEN[1,3] on the TRUNK form), must contain a Packet Switch Unit (PSU) defined on the EQPSU form.

EQPSU forms are associated with EQIM forms (5700 Record) when UNIT TYPE on the EQIM form is "SM2000", "SM2005", or "SMU6".

1.1 Recent Change View

The Recent Change Views for this form are 22.2 and 22.40.

2. FORM AND RECORD ENTRIES

2.1 BASE AND CONTROL, ESS UNIT

Enter the Base and Control Number and Office Name on each record.

Copyright © 2006 Lucent Technologies

2.2 * SWITCHING MODULE

Description: Enter the SM (Switching Module) number.

Required Field.
Valid Entries: 1 - 192

Data Rules:

Each SM entered on this form must be defined on an EQIM (Switching Module Equipage) form (5700 Record).

For 5E4(2) - 5E9(1), the CONFIGURATION field on the corresponding EQIM form must be set to "LOADED".

For 5E9(2) and later, for the CONFIGURATION that supports this SM, see the table Configurations for Facilities and Applications for the EQIM form in Division 8, Section 2.

For 5E9(1) and later, each SM (Switching Module) can have up to 5 PSU Shelves. Each Shelf can have up to 16 PH (Protocol Handlers). Shelves and Channel Groups are defined by the first 3 digits of the ISCN field. Each PH can be assigned up to 32 timeslots. To determine PHs which have more than 32 timeslots assigned, check the On Demand B Channel, Packet B Channel, Packet D Channel, EDSL, IFOPER, and IFTERM on the over-loaded PHs in the following forms and fields:

Assigned PHs	
Form	**Fields**
AMLBDSL	LCEN
DSL	DSL OE
DSLAP	AP SITE ID
DSLUSR	TN and CKTTN or CKTMLHG/CKTTERM, TN and DPKTTN or DPKTMLHG/DPKTTERM, TN and ODBTN or ODBMLHG/ODBTERM
MISLINK	OE
OSPSDSL	LCEN
RTERM	SM UNIT TYPE, UNIT NUMBER, RTEX
TRUNK	TGN, MEMB
XAT	PKT TN, PKT MLHG, TERM NBR

For 5E10 and later, if the UNIT TYPE (on the EQIM form) is not "SM2000", then:

- the following criteria must be met:

  value of EQUIPMENT BAY must be 0 - 4.

  value of CONTROL GROUP must be 0 or 1.

  values of PIDB 0/1/2/3 DG must be 0 or 1.

  values of PIDB 0/1/2/3 DP must be 0 - 14.

- the combination of the {CONTROL GROUP, CONTROL PORT} fields cannot be {0,0} or {0,1}. For SMs which are not SM-2000 class processors, PICB 0 and 1 are reserved for the local digital service unit.

For the applications in the table below:

- For 5E10 and later, each DI (Data Interface) in a SM can have a maximum of 256 nailed-up timeslots reserved for the application in the following table. These time slots can be reserved by setting rows RPTSS0 to RPTSS7 to 1 on the EQPSU form. The quantity of time slots reserved (i.e. the number set to

Copyright © 2006 Lucent Technologies

1) must be greater than or equal to the quantity of time slots assigned for the following applications. Note that a D channel only takes a quarter of a time slot. This data rule is not executed on an SM-2000 class processor, because provisioning of nailed-up time slots is not required for SM-2000 class processors.

- To meet the "vertical assignment condition", the reserved timeslots must be entered such that for any given SHELF (defined by the first digit of ISCN field or by the SHELF field on the MISLINK form), the timeslots assigned for that SHELF may be duplicated in the same vertical (column) position only as many times as the SHELF has PIDBs assigned. That is, if SHELF 1 has 2 DIO PIDBs assigned, a given vertical position (0-31) in a row (DIO PSU TSIU, RPTSSO - RPTSS7) may not be used more than twice for that shelf.

- Each SM (Switching Module) can have up to 5 PSU SHELFs (defined by the first digit in the ISCN field). Each PSU SHELF can be assigned up to (32 times X) timeslots for the following applications (where X represents the number of PIDBs, 0 to 4, provisioned per shelf):

Assigned Timeslots

Application	Forms
CCLNK	Software Release: 5E11 and later. Defined on the CCLNK form. This value supports the VCDX CCS7 on the PSU feature. For more information, see Division 2, Section 7L.
EDSL	Defined by setting TRKCLS equal to "EDSL" on the TKGRP form and defining members on TRUNK forms.
IFOPER	Defined by setting TRKCLS equal to "IFOPER" on the TKGRP form and defining members on TRUNK forms.
IFTERM	Defined by setting TRKCLS equal to "IFTERM" on the TKGRP form and defining members on TRUNK forms.
IP	Defined by setting TRKCLS equal to "PACKET" on the TKGRP form and defining members on TRUNK forms.
ISM	Defined on the PSISM form.
PKTPIPE	Defined by setting TRKCLS equal to "PKTPIPE" on the TKGRP form and defining members on TRUNK forms.
RISLU B Channel	Defined on the DSL/AMLBDSL forms where the first 3 digits of the LCEN matches SM on an EQRISLU form.
RISLU D Channel	Defined on the DSL/DSLAP/MISLINK/OSPSDSL forms where the first 3 digits of LCEN matches SM on an EQRISLU form.
RPA	Defined by setting BRI RDTA PIDB TS to a non-zero value on the EQPSUPH form.
SPCHNDLR	Defined by setting TRKCLS equal to "SPCHNDLR" on the TKGRP form and defining members on TRUNK forms.
X.25	Defined on the XAT form.
X75	Defined by setting TRKCLS equal to "X75" on the TKGRP form and defining members on TRUNK forms.
X75P	Defined by setting TRKCLS equal to "X75P" on the TKGRP form and defining members on TRUNK forms.

For 5E20 and later when SWITCHING MODULE and PSU matches with SM and PSU on the PHGRP form (5892 Record) :

SUBNET ID on the CDMAOPT form (5599 Record) must match SUBNET ID on the CA2IPMAP form (5897 Record), and also FAR CA on CA2IPMAP form must match COM ADDR on the EQPSU form.

SUBNET ID on the CDMAOPT form (5599 Record) matches SUBNET ID on the CA2IPMAP form (5897 Record), and FAR CA on the CA2IPMAP form matches COM ADDR on the EQPSU form, then INHIBIT CALL PROC on the PHGRP form must match IP TRAFFIC STATE on the CA2IPMAP form.

there must be one tuple in the CA2IPMAP form where SUBNET ID in the CDMAOPT form matches with

Copyright © 2006 Lucent Technologies

SUBNET ID on the CA2IPMAP form, and also FAR CA on the CA2IPMP form matches COM ADDR on the EQPSU form.

2.3 * PSU

Description: Packet Switching Unit Number. This field supports the Double PSU Packet Bus feature (99-5E-7797). For more information on this secured feature, see Division 2, Section 4A607.

Software Release: 5E16 and later.
Required Field.
Valid Entries: 0 - 1

Data Rules:

For 5E16 and later, when PSU is "1":

PSU TYPE must be "PSU2".

the ACT field on the SFSYS form (5713-1 Record) for SFID 607 must be set to "Y" (see the Double PSU Packet Bus feature in Division 2, Section 4A607).

PSU may not be assigned to CONTROL PORT 22. CONTROL PORT 23 is reserved for maintenance.

For 5E20 and later, when PSU is "1" and SG 0 TYPE or SG 1 TYPE is NOT "PSU2E" or "IPS"

PH CLI on the EQPSUPH form (5742 Record) must be "PHV4", "PHV5", "PHV6", "PH4", "PH22", "PHA1", "PHA2", and "PHE2".

PH TYPE on the PSUGP form (5742 Record) must be "PHV4, "PHV5", "PHV6", "PH4", "PH22", "PHA1", "PHA2", and "PHE2".

For 5E20 and later, when PSUs on this form are assigned an SG 0 TYPE or SG 1 TYPE of "IPS", the only types of Protocol Handlers that may be assigned to an IPS on the EQPSUPH form (5742 Record) are "PH22", "PH31", "PH33", "PHA2", "PHE2", "PHE3", "PHE4", "PHV7A", "PHV7AT".

When PSU is 1 and SG 0 TYPE or SG 1 TYPE is NOT "PSU2E" or "IPS" on the EQPSU form,, Protocol Handlers on the EQPSUPH form must be "PHV4", "PHV5", "PHV6", "PH4", "PH22", "PHA1", "PHA2" and "PHE2".

The following PSUs (on the EQPSU form) are assigned a SG 0 TYPE or SG 1 TYPE of "PSU2", "PSU2E" or "IPS". The values of PI SG0 TYPE and PI SG1 TYPE (on the EQIM form) must be "PI2".

When SG 0 TYPE or SG 1 TYPE is "IPS" on the EQPSU form then, SHELF SIDE 0 CLI and/or SHELF SIDE 1 CLI values must be 10000 for PSU SHELF 4. IPS reside on high speed shelf must have PF4 boards.

The following PSUs on the EQPSU form are assigned an SG 0 TYPE or SG 1 TYPE of "IPS". When the PSU SHELF 4 on the EQPSU form is entered, then the PH CLI values on EQPSUPH form must be 0x100000, 0x400000 or 0x800000.

EQPSU form can not have SG 0 TYPE or SG 1 TYPE of "PSU2E" or "IPS" unless ACT is "Y" for SFID 130 on the SFSYS form.

Copyright © 2006 Lucent Technologies

When SG 0 TYPE or SG 1 TYPE is "PSU1", the SG 0 COMMON CONTROL CLI and SG 1 COMMON CONTROL CLI values on the EQPSU forms, for both service groups must be 0, 800006 and 80000000 hex (80000000 is listed as a prototype for lab only)

The correct CLI values for both service groups are 00000000 when SG 0 TYPE or SG 1 TYPE is "PSU2","PSU2E" or "IPS"".

The SHELF SIDE 0 CLI and/or SHELF SIDE 1 CLI values on the EQPSU form for both shelf sides must be 0, 3, 104, 304, 10000, 800006 or 800007.

2.4 # PSU TYPE

Description: As of the 5E18(1) release, the PSU TYPE field is replaced with the SG 0 TYPE and SG 1 TYPE fields. See SG 0 TPYE and SG 1 TYPE below for usage information.

2.5 INTF TYPE

Description: This field specifies the interface type for the Packet Switch Unit. This is a no_change field.

Software Release: 5E18(1) and later
Default: PICB
Valid Entries: PICB, ETHERNET, or PKTBUS

2.6 COM ADDR

Description: Enter the Community Address assigned to a PSU. The COM ADDR specifies the community address assigned to this PSU. It is used as an address for this PSU in a PSU network.

Software Release: 5E10 and later.
Valid Entries: 1 - 254

Data Rules:

If a number is not entered in this field, the SM number is used as the address.

COM ADDR values on the EQPSU form must be unique.

2.7 CRIT PSU

Description: Is this PSU to be designated as a critical PSU? This field is used to designate whether or not a PSU is considered a critical unit to this SM. A "Y" in this field implies that the SM cannot perform call processing functions without the PSU. Thus, the SM will attempt everything possible, up to a full initialization, to get the PSU operational. If this field is "N", the PSU recovery does not escalate to SM initialization. This field supports the PSU Reliability Enhancements feature (99-5E-4553). See Division 2, Section 7AI.

Software Release: 5E14 and later.
Required Field.
Default: N
Valid Entries: Y, N

Data Rules:

Copyright © 2006 Lucent Technologies

For 5E14 and later, for each PSU on the EQPSU form with the CRIT PSU set to "Y", there must be at least one logical CHANNEL GROUP assigned on the CCLNK form. If no logical channel groups are assigned, CRIT PSU must be "N".

wFor 5E20(1) and later, hen CRIT PSU is "Y", both SHLF SIDE 0 EQST and SHLF SIDE 1 EQST must be "O".

2.8 CSU

Description: Is this PSU 0 being provisioned in the same cabinet as PSU 1?

Software Release: 5E20 and later.
Required Field.
Default: N
Valid Entries: Y, N

For 5E20(1) and later, when CSU is 'Y', PSU must be 0.

2.9 INTF UNIT

Description: Enter the Interface Unit number. This field was added to support the 5E15 Optically Extended Control and Data Unit feature. See Division 2, Section 9V.

Required Field.
Valid Entries: 0 - 8

Data Rules:

When INTF UNIT is greater than 0, it must be defined on the EQXCDU form (5853 Record) for the same Switching Module. In addition, the EQSTAT value on the EQCI must not exceed the MOD CTL SG0/1 EQSTAT on the EQXCDU form. (EQSTAT of "O" is greater than EQSTAT of "G", and EQSTAT of "G" is greater than EQSTAT of "U".)

The SM/INTF UNIT/DATA GRP combinations entered on this form must be defined on a EQDI form or a EQXCDU form. Also, the EQSTAT on the matching EQDI or EQXCDU form must be greater than or equal to the equipment status value ("O", "G", or "U") on this form (e.g., "O" is greater than "G" which is greater than "U"). Note also that when INTF UNIT is greater than 0 and DATA GRP is 0, these Data Groups are defined on the EQXCDU form.

For 5E16(2) and later, when INTF UNIT is 0, EQUIPMENT BAY must be 000 - 014, 100 - 104, or 200 - 208.

For 5E20(1) and later,

when INTF UNIT is 0, EQUIPMENT BAY must be 000-014, 100-114, 200-214, 300-314 or 400-414.

When INTF UNIT is greater than 0, CONTROL GROUP must not be 3.

When INTERFACE UNIT is 0 and SHLF SIDE0/1 CLI designates PIDB connectivity, the entry for DI/TSIS must be 0 - 5.

When INTERFACE UNIT is greater than 0 and SHLF SIDE0/1 CLI designates PIDB connectivity, the entry for DI/TSIS must be 0 - 4.

2.10 CON TYPE

Copyright © 2006 Lucent Technologies

Description: Enter the connection type of the PSU LINKs which are defined for this PSU. This field supports the PHA (Protocol Handler for Asynchronous Mode) feature for CDMA (Code Division Multiple Access). For more information on this feature see Division 2, Section 4A224.

NOTE: For 5E11 and later, this field was moved to the PSULNK form (5057 Record), Division 7, Section 2A.

Software Release: 5E10 and later.
Required Field.
Default: NOCON
Valid Entries:

Valid CON TYPE Entries

Entry	Definition
NOCON	No connection type assigned to this PSU.
POINT	The links on this PSU are point-to-point links. Point-to-point links require that this PSU have direct connections to every other PSU it may communicate with.

2.11 #CONTROL GROUP

Description: Enter the Control Group Number. Since both Service Groups on the same unit must be assigned to the same Control Group, this entry is the Control Group for both Service Groups 0 and 1.

Required Field.
Valid Entries:
For SM: 0 - 1
For SM-2000: 0-3

Data Rules:

CONTROL GROUP numbers assigned on the following forms must be defined as CI on an EQCI form: EQDCTU (5751 Record), EQDCLU (5810 Record), EQDS (5740 Record), EQDSC3 (5852 Record), EQDUP (5730-2), EQGDSC3 (5860 Record), EQIDCU (5846 Record), EQISLU (5731 Record), EQISTF (5823 Record), EQLU (5710 Record), EQPSU (5741 Record), EQRA (5821 Record), EQTU (5720 Record), EQFIU (5753 Record), EQMSU (5750 Record), EQRCLK (5723 Record). Furthermore, the EQSTAT on the matching EQCI form must be greater than or equal to the equipment status value on the equipment form (i.e., "O"' is greater than "G" which is greater than "U").

2.12 #CONTROL PORT

Description: Enter the Control Port number assigned to Service Group 0. The assignment for Service Group 1 of the unit is the next higher odd numbered control port on the same control group and is inferred from this entry for Service Group 0.

Required Field.
Valid Entries: even numbers in the 0 to 22 range

Data Rules:

If the CONTROL GROUP is set to 0, then the CONTROL PORT must be not be set to 0 or 1. Those ports are reserved for the LDSU (Local Digital Service Unit).

The combination of the SWITCHING MODULE, CONTROL GROUP and CONTROL PORT must not be

Copyright © 2006 Lucent Technologies

duplicated within the 5ESS Switch.

Control Port assignments cannot be duplicated on the following forms: EQDCTU (5751 Record), EQDCLU (5810 Record), EQDS (5740 Record), EQDSC3 (5852 Record), EQDUP (5730-2), EQGDSC3 (5860 Record), EQIDCU (5846 Record), EQISLU (5731 Record), EQRISLU (5732 Record), EQISTF (5823 Record), EQLU (5710 Record), EQPSU (5741 Record), EQRA (5821 Record), EQTU (5720 Record), EQFIU (5753 Record), EQMSU (5750 Record), EQRCLK (5723 Record).

For the EQAIU, EQIDCU, EQISLU, EQRISLU and EQPSU forms, two control ports are assigned based on the Control Port entered on the form. The first is the Control Port entered on the form, the second Control Port is one plus the Control Port entered on the form. Non-SM-2000 class processors reserve Control Group/Control Port 0/0 and 0/1 for the Local Digital Service unit. No other unit may specify Control Group/Control Port 0/0 or 0/1 for non-SM-2000 class processors. Non-SM-2000 class processors reserve Control Group/Control Port 0/0 and 0/1 for the Local Digital Service unit. No other unit may specify Control Group/Control Port 0/0 or 0/1 for non-SM-2000 class processors.

2.13 #EQUIPMENT BAY

Description: Enter the Equipment Location Bay number.

Required Field.
Valid Entries:

Valid EQUIPMENT BAY Entries, 5E9(2) - 5E16(1)

Entry	Definition
0 - 4	Switching Module (non-SM-2000).
0 - 14	SM-2000; SM Cabinet aisle.
100 - 104	SM-2000; Back panel; wiring position.
200 - 208	SM-2000; Front panel; door position.

Valid EQQUIPMENT BAY Entries for 5E16(2) -5E19(1)

Entry			Type
000 - 004			SM
000 - 014,	100 - 104,	200 - 208,	SM-2000
A00 - A14,	B00 - B04,	C00 - C08,	
D00 - D14,	E00 - E04,	F00 - F08,	
G00 - G14,	H00 - H04,	J00 - J08,	
K00 - K14,	L00 - L04,	M00 - M08,	
N00 - N14,	P00 - P04,	Q00 - Q08,	
R00 - R14,	S00 - S04,	T00 - T08,	
U00 - U14,	V00 - V04,	W00 - W08,	
X00 - X14,	Y00 - Y04,	Z00 - Z08	

Valid EQQUIPMENT BAY Entries for 5E20(1) and Later

Entry			Type
000 - 004			SM
000 - 014,	100 - 114,	200 - 214,	SM-2000
300-314	400-414	900-999	
A00 - A14,	B00 - B04,	C00 - C08,	
D00 - D14,	E00 - E04,	F00 - F08,	
G00 - G14,	H00 - H04,	J00 - J08,	
K00 - K14,	L00 - L04,	M00 - M08,	
N00 - N14,	P00 - P04,	Q00 - Q08,	
R00 - R14,	S00 - S04,	T00 - T08,	
U00 - U14,	V00 - V04,	W00 - W08,	
X00 - X14,	Y00 - Y04,	Z00 - Z08	

Copyright © 2006 Lucent Technologies

Data Rules:

For an associated EQUIPMENT BAY and EQUIPMENT AISLE on this form, a maximum of 16 PHE2s and PHE3s can be defined on the EQPSUPH form (5742 Record).

2.14 # EQUIPMENT VERTICAL

Description: Enter the Vertical Equipment Location that specifies the bottom of the unit.

Required Field.
Valid Entries: 0 - 84

The table below provides the expected values for 6- and 7-foot cabinents, respectively.

Valid EQUIPMENT VERTICAL Entries

Cabinet Size	Location
6-foot	7, 15, 24, 32, 41, 49, 58.
7-foot	22, 30, 39, 48, 56, 65, 74.

Data Rules:

The combination of the SWITCHING MODULE, EQUIPMENT BAY and EQUIPMENT VERTICAL must not be duplicated within the 5ESS Switch.

2.15 # EQUIPMENT AISLE

Description: Enter the Equipment Location Aisle number. This entry consists of a floor and aisle number. The first two digits are the floor number and the last two digits are the aisle number. It is recommended that floor 00 be used for equipment located in the basement per floor plan designation.

Required Field.
Valid Entries: 0000 to 9999.

2.16 SG 0 TYPE

Description: Enter the SG 0 TYPE. This field supports PSU2 which provides enhanced messaging capacity in the PSU. The new hardware is designed to be growable/degrowable into existing installations or equipped in new environments where performance needs dictate.

A PSU2 is allowed on an SM-2000 class processor. For 5E10 and later, the valid entry range for fields CI, DI, and PIDB have been expanded to allow a PSU2 to reside on an SM-2000 class processor. The following table provides the SM ranges of these fields compared to the new range allowed with an SM-2000 class processor.

Field Name	SM Range	SM2000 Range
CI	0 - 1	0 - 3
DI	0 - 1	0 - 5
PIDB	0 - 15	0 - 23

This field supports PSU2E (5E18(1)) and represents the side 0 type of the Packet Switching Unit. The PSU2E is only valid if the SMP (Switching Module Processor) is CORE700.

Software Release: 5E10 and later.
Required Field.
Default: PSU1

Copyright © 2006 Lucent Technologies

Valid Entries:

Valid PSU TYPE Entries	
Entry	**Definition**
PSU1	Packet Switch Unit type 1
PSU2	Packet Switch Unit type 2. This enhanced PSU supports an improvement in the aggregate message handling capacity on the order of tenfold.
PSU2E	Packet Switch Unit type 2E, valid only for SMP type CORE700. This entry supports the PSU2E PF3/CF3 feature. See Division 2, Section 7CE.
IPS	Intelligent Packet Switch.

Data Rules:

PSU1:

For 5E10 and later, if "PSU1" is entered, a maximum of 160 DI0/DI1 PSU TSIU TIMESLOTS may be set on each EQPSU input form.

If "PSU1" is entered, the only types of Protocol Handlers that may be assigned to a PSU1 are:

- PH2, PH3 and PH4 for 5E13.
- PH2, PH3, PH4, and PH22 for 5E14.

(Protocol Handlers are assigned on the EQPSUPH form, designated by appropriate CLI values (See Division 8, Section 23).)

If "PSU1" is entered, the SG 0 COMMON CONTROL CLI and SG 1 COMMON CONTROL CLI values must be 0, 800006, or 80000000 hex.

5E18(1) and later:

SG 0 TYPE and SG 1 TYPE must equal the same value.

when SG 0 TYPE and SG 1 TYPE is "PSU2E", the SHLF SIDE 0 CLI and/or SHLF SIDE 1 CLI values must be 104 or 304.

when double PSU configurations (two tuples on the EQPSU form, one for PSU equal 0 and another for PSU equal 1) exist, SG 0 TYPE and SG 1 TYPE must not be "PSU1".

when SG 0 TYPE and SG 1 TYPE is "PSU2", "PSU2E, or "IPS", PI SG0 TYPE and PI SG1 TYPE on the EQIM form (5700 Record) must be "PI2".

when SG 0 TYPE and SG 1 TYPE is "PSU1", the only Protocol Handlers that can be assigned to a PSU1 on the EQPSUPH form (5742 Record) are PH2, PH3, PH4, and PH22.

PH2 is designated by a PH CLI of 0x100.

PH3 is designated by a PH CLI of 0x200 or 0xa00.

PH4 is designated by a PH CLI of 0x1800.

PH22 is designated by a PH CLI of 0x2800.

when SG 0 TYPE and SG 1 TYPE is "PSU2E", the only Protocol Handlers that can be assigned to a

PSU2E on the EQPSUPH form are PHV4, PHV5, PHV6, PH3, PH4, PH22, PH31, PH33,PHA2, PHE2, and PHE3.

PHV4 is designated by a PH CLI of 0x8.

PHV5 is designated by a PH CLI of 0x20.

PHV6 is designated by a PH CLI of 0x40.

PH3 is designated by a PH CLI of 0x200 0xa00.

PH4 is designated by a PH CLI of 0x1800.

PH22 is designated by a PH CLI of 0x2800.

PH33 is designated by a PH CLI of 0x880.

PHA2 is designated by a PH CLI of 0x10000.

PHE2 is designated by a PH CLI of 0x20000.

PHE3 is designated by a PH CLI of 0x80000.

PHE4 is designated by a PH CLI of 0x100000.

when SG 0 TYPE and SG 1 TYPE is "PSU2", the only Protocol Handlers that can be assigned to a PSU2 on the EQPSUPH form are PHV4, PHV5, PHV6, PH4, PH22, PHA1, PHA2, and PHE2.

PHV4 is designated by a PH CLI of 0x8.

PHV5 is designated by a PH CLI of 0x20.

PHV6 is designated by a PH CLI of 0x40.

PH3 is designated by a PH CLI of 0x200 0xa00.

PH4 is designated by a PH CLI of 0x1800.

PH22 is designated by a PH CLI of 0x2800.

PHA1 is designated by a PH CLI of 0x10.

PHA2 is designated by a PH CLI of 0x10000.

PHE2 is designated by a PH CLI of 0x20000.

when SG 0 TYPE and SG 1 TYPE is "PSU2E", the EQPSUPH form can only have up to 5 PH22s per each half of the shelf (PH ROW 1 - 8 is the first half and ROW 9 - 16 is the second half). PH22 is designated by a PH CLI of 0x2800.

NOTE: As of 5E18(1), this rule is no longer valid.

When SG 0 TYPE and SG 1 TYPE is "PSU2E" or "IPS", the ACT field for SFID 130 on the SFSYS form

(5713-1 Record) must be set to "Y".

The following data rule is not executed on an SM-2000 class processor, because provisioning of nailed-up timeslots is not required on SM-2000 class processors. For a PSU1, each Data Interface in a SM can have a maximum of 128 nailed-up timeslots reserved for the following applications:

Timeslots Reserved for Applications

Application	Definition
CCLNK	Software Release: 5E11 and later. Defined on the CCLNK form.
EDSL	Defined by setting TRKCLS equal to "EDSL" on the TKGRP form and defining members on TRUNK forms.
IFOPER	Defined by setting TRKCLS equal to "IFOPER" on the TKGRP form and defining members on TRUNK forms.
IFTERM	Defined by setting TRKCLS equal to "IFTERM" on the TKGRP form and defining members on TRUNK forms.
IP	Defined by setting TRKCLS equal to "PACKET" on the TKGRP form and defining members on TRUNK forms.
ISM	Defined on the PSISM form.
PKTPIPE	Defined by setting TRKCLS equal to "PKTPIPE" on the TKGRP form and defining members on TRUNK forms.
RISLU B Channel	Defined on the DSL/AMLBDSL forms where the first 3-digit of LCEN matches SM on an EQRISLU form.
RISLU D Channel	Defined on the DSL/DSLAP/OSPSDSL forms where the first 3-digit of LCEN matches SM on an EQRISLU form.
RPA	Defined by setting BRI RDTA PIDB TS to a non-zero value on the EQPSUPH form.
SPCHNDLR	Defined by setting TRKCLS equal to "SPCHNDLR" on the TKGRP form and defining members on TRUNK forms.
X.25	Defined on the XAT form.
X75	Defined by setting TRKCLS equal to "X75" on the TKGRP form and defining members on TRUNK forms.
X75P	Defined by setting TRKCLS equal to "X75P" on the TKGRP form and defining members on TRUNK forms.

These timeslots can be reserved by setting rows RPTSS0 to RPTSS7 to 1 on the EQPSU form. The quantity of timeslots reserved (i.e. the number of entries set to 1) must be greater than or equal to the quantity of timeslots assigned for the above applications. Note that a D channel only takes a quarter of a timeslot.

Also, the reserved timeslots must be entered such that for any given SHELF (defined by the first digit of the ISCN), the timeslots assigned for a SHELF may be duplicated in the same vertical (column) position only as many times as the SHELF has PIDBs assigned. For example, if SHELF 1 has 2 DI0 PIDBs assigned in the PIDB field, then a given vertical position (0-31) in the DI0 PSU TSIU TIMESLOTS field (RPTSS0 - RPTSS7) may not be used more than twice for that shelf.

PSU2: "PSU2" must be entered if:

DI is greater than 1
PIDB is greater than 15
EQUIPMENT BAY is greater than 4
SG0 CI or SG1 CI is greater than 1.

If "PSU2" is entered, then :

- the SHLF SIDE 0 CLI and/or SHLF SIDE 1 CLI values must be 3.
- the values of PI SG0 TYPE and PI SG1 TYPE (on the EQIM form) must be "PI2"

Copyright © 2006 Lucent Technologies

- the SG 0 COMMON CONTROL CLI and SG 1 COMMON CONTROL CLI value must be 0.
- the only types of Protocol Handlers that may be assigned to a PSU2 on the EQPSUPH form are:
  - PHV1, PHV2, PHV3, PHA1, PH3, and PH4 for 5E11.
  - PHV1, PHV2, PHV3, PHV4, PHA1, PH3, and PH4 for 5E12 and 5E13.
  - PHV1, PHV2, PHV3, PHA1, PH3, and PH4, and PH22 for 5E14.
  - PHV1, PHV2, PHV3, PHV4, PHV5, PHA2, PHE2, PH3, PH4, PH22, PH31, and PH33 for 5E16(2).
  - PHV1, PHV2, PHV3, PHV4, PHV5, PHV6, PHA1, PHA2, PHE2, PH3, PH4, PH22, and PH31 for 5E18.

PHV1 is designated by a PH CLI of 1.

PHV2 is designated by a PH CLI of 2 or 4.

PHV3 is designated by a PH CLI of 4.

PHV4 is designated by a PH CLI of 8.

PHV5 is designated by a PH CLI of 20.

PHV6 is designated by a PH CLI of 40.

PHA1 is designated by a PH CLI of 10.

PHA2 is designated by a PH CLI of 10000.

PHE2 is designated by a PH CLI of 20000.

PH3 is designated by a PH CLI of 200 or a00.

PH4 is designated by a PH CLI of 1800.

PH22 is designated by a PH CLI of 2800.

PH31 is designated by a PH CLI of 8800.

PH33 is designated by PH CLI of 880

For 5E12 and later:

- for DF2 connectivity, PSU2 must be entered.

For 5E16 and later:

PH31's may only reside on DF2 (Data Fanout with PCT) versions on the PSU Shelf.

"IPS"

When SG 0 TYPE or SG 1 TYPE is "IPS" and the SHELF SIDE 0 CLI and/or SHELF SIDE 1 CLI values on the EQPSU forms have bit position 16 or 17 blank, then SHLF SIDE 0 CLI and/or SHLF SIDE 1 CLI values must be 104 or 304. IPS residing on a Medium-speed shelf must have DF2 (Data Fanout (DF2) with PCT links) or DF2B (New DF2 pack with hardware and firmware modifcation).

When SG 0 TYPE or SG 1 TYPE is "IPS" and the SHELF SIDE 0 CLI and/or SHELF SIDE 1 CLI values on the EQPSU forms have bit position 16 or 17 set, then SHLF SIDE 0 CLI and/or SHLF SIDE 1 CLI values must be 10000h. IPS residing on a high speed shelf must have PF4 boards

When SG 0 TYPE or SG 1 TYPE is "IPS", and the SHELF SIDE 0 CLI and/or SHELF SIDE 1 CLI values on the EQPSU forms are not 10000, then the PH CLI values on the EQPSUPH form must be 8, 0x20, 0x40, 0x200, 0x1800, 0x2800, 0x10000, or 0x20000.

When SG 0 TYPE and SG 1 TYPE is "IPS", EQUIPMENT BAY for both PSU(s) on this "SWITCHING MODULE" must not be identical on the EQPSU form.

When SG 0 TYPE and SG 1 TYPE is "IPS" and PSU SHELF is 4, SHLF SIDE 0 PF and SHLF SIDE 1 PF must be "PF4".

When SG 0 TYPE and SG 1 TYPE is "IPS" and PSU SHELF is 0 - 3, SHLF SIDE 0 PF and SHLF SIDE 1 PF must be "PF3".

When SG 0 TYPE and SG 1 TYPE is "IPS", a PSU SHELF 4 PIDB entry is always required.

When SG 0 TYPE and SG 1 TYPE is "IPS", for the PSU SHELF 4 entry, all fields up to SHLF SIDE 1 PF must be entered.

When SG 0 TYPE and SG 1 TYPE is "IPS", at least one PSU SHELF 0, 1, 2, or 3 PIDB entry is always required.

When SG 0 TYPE or SG 1 TYPE is "IPS" then SHELF SIDE 0 CLI and/or SHELF SIDE 1 CLI values must be 104 or 304 for PSU SHELF 0 to 3, and 10000 for PSU SHELF 4..

When SG 0 TYPE and SG 1 TYPE is "IPS", and PSU SHELF 0 - 3 is entered, then the PH CLI values on the EQPSUPH form (5742 Record) must be 8, 20, 40, 200, a00, 1800, 2800, 10000, or 20000.

When SG 0 TYPE and SG 1 TYPE is "IPS", and PSU SHELF 4 is entered, then the PH CLI values on the EQPSUPH form (5742 Record) must be 100000 or 400000.

When SG 0 TYPE / SG 1 TYPE is "IPS", EQUIPMENT VERTICAL must be 41.

is not "IPS"

When SG 0 TYPE or SG 1 TYPE is not "IPS", the PSU SHELF 0 PIDB entry is always required.

When SG 0 TYPE or SG 1 TYPE is not "IPS", SHLF SIDE 0/1 PF must be left blank.

2.17 #SG 0 COMMON CONTROL EQST

Description: Enter the Equipment Status of the PSU Service Group 0 Common Control Board. New 5ESS Switch offices and equipment additions require the Operational status. During off-line ODA database retrofits, values other than "O" may exist.

Required Field.

Default: O
Valid Entries:

Valid SG 0 COMMON CONTROL EQST Field	
Entry	**Description**
U	Unequipped.
G	Growth.
O	Operational.

Data Rules:

If the SG 1 COMMON CONTROL EQST field is "O" (Operational), then the SG 0 COMMON CONTROL EQST field must also be "O".

If the SG 1 COMMON CONTROL EQST field is "G" (Growth), then the SG 0 COMMON CONTROL EQST field must be "O" or "G".

2.18 #SG 0 COMMON CONTROL CLI

Description: Enter the Change Level Indicator of the PSU Service Group 0 Common Control Board.

Required Field.
Valid Entries: 0 to FFFFFFFF (hexadecimal)

For a complete listing of valid CLI values, J-Drawing and list combinations, see Division 8, Section 1.

Data Rules:

For 5E10 and later:

- if "PSU1" is entered in the PSU TYPE field, the SG 0 COMMON CONTROL CLI and SG 1 COMMON CONTROL CLI values must be 0, 1, or 800006.
- if "PSU2", "PSU2E", or "IPS" is entered in the PSU TYPE field, the CLI value for both service groups is 0.

2.19 SG 1 TYPE

Description: This field supports PSU2E (5E18(1) and represents the side 1 type of the Packet Switching Unit.

Software Release: 5E10 and later.
Required Field.
Default: PSU1
Valid Entries:

Valid PSU TYPE Entries	
Entry	**Definition**
PSU1	Packet Switch Unit type 1
PSU2	Packet Switch Unit type 2. This enhanced PSU supports an improvement in the aggregate message handling capacity on the order of tenfold.
PSU2E	Packet Switch Unit type 2E. This entry supports the PSU2E PF3/CF3 feature. See Division 2, Section 7CE.
IPS	Intelligent Packet Switch.

Data Rules:

For 5E21(1) and later, when SG 1 TYPE is not "IPS", for each SHELF entry, either all fields (except SHLF SIDE 0 / 1 PF) up to PIDB0 must be entered or all fields must be left blank.

Copyright © 2006 Lucent Technologies

2.20 #SG 1 COMMON CONTROL EQST

Description: Enter the Equipment Status of the PSU Service Group 1 Common Control Board. New 5ESS Switch offices and equipment additions require the Operational status. During off-line ODA database retrofits, values other than "O" may exist.

Required Field.
Default: O
Valid Entries:

Valid SG 1 COMMON CONTROL EQST Field

Entry	Description
U	Unequipped.
G	Growth.
O	Operational.

2.21 #SG 1 COMMON CONTROL CLI

Description: Enter the Change Level Indicator of the PSU Service Group 1 Common Control Board.

Required Field.
Valid Entries: 0 to FFFFFFFF (hexadecimal)

For a complete listing of valid CLI values, J-Drawing and list combinations, see Division 8, Section 1.

Data Rules:

For 5E10 and later, the SG 0 COMMON CONTROL CLI and SG 1 COMMON CONTROL CLI values for both service groups are 0 or 1.

2.22 SG 0 CF TYPE

Description: This field represents the Service Group 0 Control Fanout Type. This is a display only field that supports the IPS feature. For more information see Division 2, Section 7CK.

Required Field.
Default: CF4

2.23 SG 0 CF SHELF

Description: This field represents the Service Group 0 Control Fanout Shelf number. This is a display only field that supports the IPS feature. For more information see Division 2, Section 7CK.

Required Field.
Default: 0

2.24 SG 0 DI

Description: Enter the Side 0 Data Interface group number. For more information see Division 2, Section 7CL.
Valid Entries: 0-1 for SM, 0-5 for SM2000.

Data Rules:

For 5E21(1) and later:

Copyright © 2006 Lucent Technologies

SG0 DI, SG0 PIDB, SG0 PIDB EQSTAT must all be blank or entered.

2.25 SG 0 PIDB

Description: Enter the Side 0 peripheral data bus number.
Valid Entries: 0-15 for SM, 0-23 for SM2000.

Data Rules:

SG 0 PIDB must be an even number.

When SG 0 PIDB and SG 1 PIDB are entered, SG 1 PIDB must equal SG 0 PIDB + 1.

2.26 SG 0 PIDB EQSTAT

Description: Enter the Side 0 PIDB equipment status.
Valid Entries:

Valid SG 0 PIDB EQSTAT Field

Entry	Description
U	Unequipped.
G	Growth.
O	Operational.

Data Rules:

For 5E21(1) and later:

When SG0 PIDB EQSTAT is "O", EQSTAT must be "O".

When SG 0 PIDB EQSTAT is "G", SG 0 COMMON CONTROL EQST must be "O" or "G".

2.27 SG 1 CF TYPE

Description: This field represents the Service Group 1 Control Fanout Type. This is a display only field that supports the IPS feature. For more information see Division 2, Section 7CK.

Required Field.
Default: CF4

2.28 SG 1 CF SHELF

Description: This field represents the Service Group 1 Control Fanout Shelf number. This is a display only field that supports the IPS feature. For more information see Division 2, Section 7CK.

Required Field.
Default: 0

2.29 SG 1 DI

Description: Enter the Side 1 Data Interface group number. For more information see Division 2, Section 7CL.
Valid Entries: 0-1 for SM, 0-5 for SM2000.

Data Rules:

Copyright © 2006 Lucent Technologies

For 5E21(1) and later:

SG1 DI, SG1 PIDB, SG1 PIDB EQSTAT must all be blank or entered.

2.30 SG 1 PIDB

Description: Enter the Side 1 peripheral data bus number.
Valid Entries: 0-15 for SM, 0-23 for SM2000.

Data Rules:

SG 1 PIDB must be an odd number.

When SG 0 PIDB and SG 1 PIDB are entered, SG 1 PIDB must equal SG 0 PIDB + 1.

2.31 SG 1 PIDB EQSTAT

Description: Enter the Side 1 PIDB equipment status.
Valid Entries:

Valid SG 1 PIDB EQSTAT Field

Entry	Description
U	Unequipped.
G	Growth.
O	Operational.

Data Rules:

When SG 1 PIDB EQSTAT is "O", SG 1 COMMON CONTROL EQST must be "O".

When SG 1 PIDB EQSTAT is "G", SG 1 COMMON CONTROL EQST must be "O" or "G"

PIDBs

The following fields (Section 2.32 - Section 2.39) define PIDBs (Peripheral Interface Data Buses). For 5E9(2) and earlier, each Service Group of the PSU provides for the termination of five PIDBs, one on each of five shelves. For 5E10 and later, up to 20 PIDBs can be terminated, up to 4 on each shelf.

PIDBs are to be equipped in pairs, one on each Service Group. All PIDBs entered on this form connect to the TSIU (Time Slot Interchange Unit). The PIDBs connecting the ISLU (Integrated Services Line Unit) and the PSU are assigned on the EQISLU form (5731 Record). Assignments to Side (Service Group) 1 of a PSU shelf of the PSIU are algorithmically related to the assignments for Side 0 and can be inferred from the Side 0 assignments. Therefore, only the Side 0 assignments are entered on this form. When the EQPSU form is entered, PIDB 0 entries are always required for PSU SHELF 0.

For 5E8 and later, the IDCU (Intergrated Digital Carrier Unit) was introduced for interface to RTs (Remote Terminals). IDCU PIDBs are assigned to the PSU on the EQIFAC form (5847 Record).

2.32 PIDBs

Description: Enter the PIDB field information for the shelf position. Each Switching Module can have up to 5 PSU SHELFs (defined by the first digit in the ISCN (Integrated Services Channel Number)).

Data Rules:

For 5E10 and later:
For each SHELF entry:

- either all fields up to PIDB 0 must be entered or all fields must be left blank, when SG 0 TYPE or SG 1 TYPE is "IPS".
- either all fields, except SHLF SIDE 0/1 PF, up to PIDB 0 must be entered, or all fields must be left blank, when SG 0 TYPE or SG 1 TYPE is not "IPS".
- either all PIDB 1 fields must be entered, or all PIDB 1 fields must be left blank.
- all field segments for a particular PIDB (0 - 3) must be entered or left blank.
- all entered DI values must be the same.
- PIDB fields must be entered sequentially (PIDB 0 before PIDB 1, etc.; if PIDB 2 is operational, PIDB 1 must be operational, etc.)
- if PIDB 1 entries are made, the SHLF SIDE0 CLI and SHLF SIDE1 CLI must designate DF-MP (Data Fanout-Multiple PIDBs) for a PSU shelf.
- the number of timeslots that can be assigned on each PSU SHELF is:
  - 32 times the number of PIDBs (0 - 4) for an SM, or
  - 31 times the number of PIDBs (0 - 4) for an SM-2000 class processor.

Timeslots can be assigned for the following applications:

Timeslots Assigned to Applications

Application	Definition
CCLNK	Software Release: 5E11 and later. Defined on the CCLNK form.
EDSL	Defined by setting TRKCLS equal to "EDSL" on the TKGRP form and defining members on TRUNK forms.
IFOPER	Defined by setting TRKCLS equal to "IFOPER" on the TKGRP form and defining members on TRUNK forms.
IFTERM	Defined by setting TRKCLS equal to "IFTERM" on the TKGRP form and defining members on TRUNK forms.
IP	Defined by setting TRKCLS equal to "PACKET" on the TKGRP form and defining members on TRUNK forms.
ISM	Defined on the PSISM form.
PKTPIPE	Defined by setting TRKCLS equal to "PKTPIPE" on the TKGRP form and defining members on TRUNK forms.
RISLU B Channel	Defined on the DSL/AMLBDSL forms where the first 3-digit of LCEN matches SM on an EQRISLU form.
RISLU D Channel	Defined on the DSL/DSLAP/MISLINK/OSPSDSL forms where the first 3-digit of LCEN matches SM on an EQRISLU form.
RPA	Defined by setting BRI RDTA PIDB TS to a non-zero value on the EQPSUPH form.
SPCHNDLR	Defined by setting TRKCLS equal to "SPCHNDLR" on the TKGRP form and defining members on TRUNK forms.
X.25	Defined on the XAT form.
X75	Defined by setting TRKCLS equal to "X75" on the TKGRP form and defining members on TRUNK forms.
X75P	Defined by setting TRKCLS equal to "X75P" on the TKGRP form and defining members on TRUNK forms.

Copyright © 2006 Lucent Technologies

2.33 SHLF SIDE 0 EQST

Description: Enter the Equipment Status of Side 0 of the PSU shelf. New 5ESS Switch offices and equipment additions require the Operational status. During off-line ODA database retrofits, values other than "O" may exist; but if they do, the EQST value here must be lower than or equal to the lower of the two COMMON CONTROL EQST values. The hierarchy of equipment status, from lowest to highest, are Unequipped, Growth and Operational.

Valid SHLF SIDE 0 EQST Field

Entry	Description
U	Unequipped.
G	Growth.
O	Operational.

2.34 SHLF SIDE 0 CLI

Description: Enter the Change Level Indicator of Side 0 of the PSU shelf.
Valid Entries: 0 to 7FFFFFFF (hexadecimal)

Data Rules:

For 5E10 - 5E11, valid CLI values for both SHLF SIDE 0 CLI and/or SHLF SIDE 1 CLI are 0, 3, 800006, or 800007.

For 5E12 and later, valid CLI values for both SHLF SIDE 0 CLI and/or SHLF SIDE 1 CLI are 0, 3, 104, 304, 10000, 800006, or 800007.

For 5E12 and later, if SHLF SIDE0/1 CLI designates DF2 connectivity:

- PIDB/SLOT must be 0 - 3.
- PIDB 1, PIDB 2, and PIDB 3 fields must be blank.
- bit position 8 (100h) and bit position 2 (004h) must be "or'd" to yield a CLI value of 104.

When PH CLI on the EQPSUPH form is 2800 (PH22), the hexadeciaml value for both SHLF SIDE 0 CLI and SHLF SIDE 1 CLI must be 104 or 304.

For valid CLI values,Drawing and list combinations, see Division 8, Section 1.

For 5E18 and later, when SHLF SIDE 0 CLI and/or SHLF SIDE 1 CLI is 3, SG 0 TYPE and SG 1 TYPE must be "PSU2".

When SHLF SIDE 0/1 CLI designates PCT connectivity, SG 0 TYPE and SG 1 TYPE must be "PSU2", "PSU2E", or "IPS".

When SHLF SIDE0 CLI designates PCT connectivity, SIDE1 CLI must designate PCT connectivity.

When SHLF SIDE0/1 CLI designates PCT connectivity, entries under PIDB 1, PIDB 2 and PIDB 3 must not be entered.

When SHLF SIDE0/1 CLI designates PCT connectivity, the entry for DI/TSIS must be 1 - 9.

When SHLF SIDE0/1 CLI designates PCT connectivity, the entry for PIDB/SLOT must be 0 - 3.

Copyright © 2006 Lucent Technologies

2.35 SHLF SIDE 0 PF

Description: This field represents the PF (Packet Fanout) of Side 0 of the PSU shelf.
Valid Entries:

Valid SHLF SIDE 0 PF Field

Entry	Description
PF3	Packet Fanout Version 3
PF4	Packet Fanout Version 4.

2.36 SHLF SIDE 1 EQST

Description: Enter the Equipment Status of Side 1 of the PSU shelf.

New 5ESS Switch offices and equipment additions require the Operational status. During off-line ODA database retrofits, values other than "O" may exist; but if they do, the EQST value here must be lower than or equal to the lower of the two COMMON CONTROL EQST values. The hierarchy of Equipment Status, from lowest to highest, are Unequipped, Growth and Operational.

Valid SHLF SIDE 1 EQST Field

Entry	Description
U	Unequipped.
G	Growth.
O	Operational.

2.37 SHLF SIDE 1 CLI

Description: Enter the Change Level Indicator of Side 1 of the PSU shelf.
Valid Entries: 0 to 7FFFFFFF (hexadecimal)

Data Rules:

For 5E10 - 5E11, valid CLI values for both SHLF SIDE 0 CLI and/or SHLF SIDE 1 CLI are 0, 3, 800006, or 800007.

For 5E12 and later, valid CLI values for both SHLF SIDE 0 CLI and/or SHLF SIDE 1 CLI are 0, 3, 104, 800006, or 800007.

For 5E12 and later, if SHLF SIDE0/1 CLI designates DF2 connectivity:

- PIDB/SLOT must be 0 - 3.
- PIDB 1, PIDB 2, and PIDB 3 fields must be blank.
- bit position 8 (100h) and bit position 2 (004h) must be "or'd" to yield a CLI value of 104.

When PH CLI on the EQPSUPH form is 2800 (PH22), the hexadeciaml value for both SHLF SIDE 0 CLI and SHLF SIDE 1 CLI must be 104 or 304.

When SHLF SIDE1 CLI designates PCT connectivity, SIDE0 CLI must designate PCT connectivity.

When SHLF SIDE0/1 CLI designates PCT connectivity, entries under PIDB 1, PIDB 2 and PIDB 3 must not be entered.

When SHLF SIDE0/1 CLI designates PCT connectivity, the entry for DI/TSIS must be 1 - 9.

Copyright © 2006 Lucent Technologies

When SHLF SIDE0/1 CLI designates PCT connectivity, the entry for PIDB/SLOT must be 0 - 3.

2.38 SHLF SIDE 1 PF

Description: This field represents the PF (Packet Fanout) of Side 1 of the PSU shelf.
Valid Entries:

Valid SHLF SIDE 1 PF Field

Entry	Description
PF3	Packet Fanout Version 3
PF4	Packet Fanout Version 4.

2.39 CONNECT TYPE

Description: The Connectivity Type field is a Recent Change only field. If DF2 (Data Fan 2) connectivity (defined by the CLI) is equipped, it must be equipped for both SHLF SIDE0 and SIDE1

Software Release: 5E12 and later

PIDB

For 5E9(2) and earlier, two fields (DATA GROUP and DATA PORT) were used to define the PIDB for each PSU shelf. For 5E10 and later, the following fields (Section 2.40 - Section 2.48) define the DG (Data Group), DP (Data Port), and ST (Equipment Status) for PIDB0 - PIDB3 on each PSU shelf.

For 5E12 and later, the field group of PIDB0/PCT was added to accommodate expansion of PSU capacity by increasing the number of time slots available between the SM-2000 TSIU and each PSU shelf from 128 to 768. Three fields were added to accommodate this change: DI/TSIS, PIDB/SLOT, and EQ.

2.40 DATA GROUP

Description: The name of this field was changed to DG in 5E10. This field name applies to 5E9(2) and earlier. See DG for usage information.

PIDB0/PCT

The following fields (Section 2.41 - Section 2.43) were added to support the Data Fan 2 PSU Capacity Expansion feature which increases the number of time slots available between the SM-2000 TSIU and each PSU shelf from 128 to 768. See Division 2, Section 7T.

2.41 DI/TSIS

Description: Enter the DI/TSIS. (Data interface number (DI), or time slot interchanger slice number)

Software Release: 5E12 and later
Valid Entries:
For DI: 0 - 5
For TSIS: 1 - 9

Data Rules:

Each PSU Shelf TSI/SLOT entered on the EQPSU form must be defined on the EQTSI form. The matching EQTSI form must have an EQSTAT value that is greater than or equal to the PIDB/PC EQ defined on the

Copyright © 2006 Lucent Technologies

EQPSU form (i.e., "O" is greater than "G", which is greater than "U").

2.42 PIDB/SLOT

Description: Enter the PIDB/SLOT.

Software Release: 5E12 and later
Valid Entries:
For PIDB: 0 - 22 (even)
For SLOT: 0 - 3

Data Rules:

If SHLF SIDE0/1 CLI designates DF2 connectivity, PIDB/SLOT must be 0 - 3.

2.43 EQ

Description: Enter status of the equipment.

Software Release: 5E12 and later
Valid Entries:

Valid EQ Entries

Entry	Description
G	Growth.
O	Operational.
U	Unequipped.

2.44 DG

Description: Enter the assigned DATA GROUP (Data Interface) number for PIDB 1, PIDB 2, and/or or PIDB 3. This field was called DATA GROUP for 5E9(2) and earlier.

The corresponding field on the RC view 22.2 is DI (Data Interface).
Valid Entries:
For SM: 0 and 1
For SM-2000: 0 - 5

Data Rules:

The combination of DATA GROUP 1 and DATA PORT 14 can only be assigned on the EQPSU forms whose SM is equipped with an SM-2000 class processor. The DATA GROUP/DATA PORT assignment on the EQPSU form also reserves the next sequential DATA PORT value. DATA GROUP 1, DATA PORT 15 is reserved for classic SMs.

2.45 DATA PORT

Description: The name of this field was changed to DP in 5E10. This field name applies to 5E9(2) and earlier. See DP for usage information.

2.46 DP

Description: Enter the Data Port assignment (Peripheral Interface Data Bus number) for Service Group 0.

Copyright © 2006 Lucent Technologies

This field was called DATA PORT for 5E9(2) and earlier.

The corresponding field on the RC view 22.2 is PIDB.
Valid Entries:
For 5E9(2) and earlier: even numbers 0 - 15
For 5E10 and later: even number 0 - 22

Data Rules:

The combination of the DG (DATA GROUP) and DP (DATA PORT) entries must be unique in the PIDB list.

The combination of the SWITCHING MODULE, DG (DATA GROUP) and DP (DATA PORT) entries must be unique in the 5ESS Switch.

Only even numbered Data Ports are allowed since the entries on this form are for shelf Service Group 0. The data port value is automatically incremented for Service Group 1.

The following forms cannot have a duplicate Data Port assignment on the same Switching Module: EQDCLU (5810 Record), EQDS (5740 Record), EQDSC3 (5852 Record), EQDUP (5730-2), EQGDSC3 (5860 Record), EQIDCU (5846 Record), EQISLU (5731 Record), EQISTF (5823 Record), EQLU (5710 Record), EQPSU (5741 Record), EQRA (5821 Record), EQTU (5720 Record).

2.47 ST

Description: For 5E12 and later, the name of this field was changed to EQ. See EQ for usage information.

2.48 EQ

Description: For 5E11 and earlier, this field was called ST (status). Enter the PIDB equipment status.

The corresponding field on the RC view 22.2 is PIDB EQSTAT.

Software Release: 5E10 and later.
Valid Entries:

Valid ST Entries

Entry	Description
G	Growth.
O	Operational.
U	Unequipped.

Data Rules:

If PSU EQSTAT is "G", PIDB ST in the PIDBs list must be "G" or "U". If PSU EQSTAT is "U", PIDB ST must be "U".

Only Operational, "O", status is allowed in new offices and equipment additions.

DI0 PSU TSIU TIMESLOTS and DI1 PSU TSIU TIMESLOTS

The DI0 PSU TSIU TIMESLOTS and DI1 PSU TSIU TIMESLOTS lists are used to reserve timeslots, on Data Interfaces 0 and 1 respectively, for those applications which require a reserved timeslot.

Each list has four rows (for 5E9(2) and earlier), or eight rows (for 5E10 and later). Each row consists of 32

Copyright © 2006 Lucent Technologies

positions with each position equating to a single time slot. The 32 positions are divided into eight groups of four positions each. The positions cannot be defined singly; they must be defined in groups of four. An entry of 1 in a position reserves the time slot. An entry of 0 in a position leaves the time slot available for applications other than those requiring a reserved time slot. The carriage return key can be used to skip over a group of four timeslots; this has the same affect as entering four zeros.

Each list is comprised of 256 timeslot positions (8 rows of 32). One Data Interface can reserve 128 out of the 256 available time slots. However, the total quantity of reserved time slots, on Data Interface 0 and Data Interface 1, cannot exceed 160; for 5E10 and later this applies if "PSU1" is entered as the PSU TYPE. Division 2, Section 1BK provides further information on engineering considerations needed to make these assignments.

See also the Data Rules for the SM field for more timeslot information.

2.49 DI0 PSU TSIU TIMESLOTS

Description: Enter the DI0 PSU TSIU TIMESLOTS.
Valid Entries: 0 or 1

Data Rules:

Each SM (which is not an SM-2000 class processor) has 2 DIs (Data Interfaces). Each DI has 16 Data Ports for terminating up to 16 PIDBs. The PIDBs are used as communication links between the peripheral units and a Data Interface. Each PIDB has 32 TSs (Time Slots), numbered 0 thru 31. Each DI is restricted to no more than 256 TSs: either 8 fully active Data Ports (8 * 32 TSs = 256 TSs) or a combination of fully active and partially active Data Ports (for a total of 256 TSs).

The SMs on the forms listed below cannot exceed the maximum capacity of 256 total TSs (with no more than 8 active parallel TSs) per Data Interface.

The following table specifies the number of PIDB TSs required by each peripheral unit and the name of the input form where the unit is defined:

Maximum Capacity Timeslots

Form	Peripheral Unit	Time Slots/Data Interface
EQDCLU	DCLU	32 TSs for LCRs 8:1 - 9:1.
EQDCLU	DCLU	64 TSs for LCRs 4.5:1 and lower.
EQDSP	DSU	Between 0 and 15 TSs (user-specified, where DSU 0).
EQDUP	DLTU	24 TSs per DFI-1 pack.
EQDUP	DLTU	24 or 48 TSs per DFI-2 pack.
EQGDSC3	GDSC3	32 TS.
EQIDCU	IDCU	32 TSs.
EQISLU	ISLU	32 TSs per DATA PORT.
EQISTF	DSU2-ISTF	31 TSs.
EQLU	LU	64 TSs.
EQPSU 5E10 and later	PSU	Between 0 and 256 TSs (user-specified).
EQRA	DSU2-RAF	32 TSs per DTA or CTR w/AOC.
EQRA	DSU2-RAF	20 TSs per DTA or CTR.
EQRA	DSU2-RAF	32 TSs per ANN.
EQTUP	TU	Between 0 and 4 TSs (user-specified).

Time Slots are assigned to the Peripheral units in sets of 32 (by PIDB).

2.50 DI1 PSU TSIU TIMESLOTS

Copyright © 2006 Lucent Technologies

Description: Enter the DI1 PSU TSIU TIMESLOTS.
Valid Entries: 0 or 1

Data Rules:

See Data Rule for DI0 PSU TSIU TIMESLOTS.

2.51 AVAILABLE TS

Description: This is a Recent Change Only field. In Recent Change, the AVAILABLE TIMESLOTS row indicates how many (0-8) channels are available for each timeslot on the specified DI. Channels may be reserved for other SM-units, or may have been reserved for this PSU.

```
Screen 1 of 4                    5ESS Switch
eqpsu                     OFFICE DATA ADMINISTRATION
(5741-1/2)              PACKET SWITCHING UNIT EQUIPAGE

 *1. SWITCHING MODULE   ___          #11. SG 0 COMMON CONTROL EQST O
 #2. PSU TYPE           PSU1         #12. SG 0 COMMON CONTROL CLI  ________
  3. COM ADDR           ___          #13. SG 1 COMMON CONTROL EQST O
  4. CRIT PSU           N            #14. SG 1 COMMON CONTROL CLI  ________
  5. INTF UNIT          0
 #6. CONTROL GROUP      _
 #7. CONTROL PORT       __
 #8. EQUIPMENT BAY      ___
 #9. EQUIPMENT VERTICAL __
#10. EQUIPMENT AISLE    ____
```

```
Screen 2 of 4                    5ESS Switch
eqpsu                     OFFICE DATA ADMINISTRATION
(5741-1/2)              PACKET SWITCHING UNIT EQUIPAGE


15. PIDBx

     PSU   SHLF SIDE 0   SHLF SIDE 1          CONNECT
row SHELF   EQST  CLI     EQST  CLI            TYPE
 1    0      _  ________   _  ________
 2    1      _  ________   _  ________
 3    2      _  ________   _  ________
 4    3      _  ________   _  ________
 5    4      _  ________   _  ________
             PSU            PIDB0/PCT          PIDB 1      PIDB 2      PIDB 3
       row  SHELF   DI/TSIS  PIDB/SLOT EQ    DG  DP EQ   DG  DP EQ   DG  DP EQ
        1     0          _      __     _     _  __  _    _  __  _    _  __  _
        2     1          _      __     _     _  __  _    _  __  _    _  __  _
```

```
        3     2          _      __     _      _  __  _    _  __  _    _  __  _
        4     3          _      __     _      _  __  _    _  __  _    _  __  _
        5     4          _      __     _      _  __  _    _  __  _    _  __  _
```

```
Screen 3 of 4                     5ESS Switch
eqpsu                     OFFICE DATA ADMINISTRATION
(5741-1/2)              PACKET SWITCHING UNIT EQUIPAGE

                   39. DI0 PSU TSIU TIMESLOTS
             3322 2222 2222 1111 1111 1100 0000 0000
             1098 7654 3210 9876 5432 1098 7654 3210
1. RPTSS0    ____ ____ ____ ____ ____ ____ ____ ____
2. RPTSS1    ____ ____ ____ ____ ____ ____ ____ ____
3. RPTSS2    ____ ____ ____ ____ ____ ____ ____ ____
4. RPTSS3    ____ ____ ____ ____ ____ ____ ____ ____
5. RPTSS4    ____ ____ ____ ____ ____ ____ ____ ____
6. RPTSS5    ____ ____ ____ ____ ____ ____ ____ ____
7. RPTSS6    ____ ____ ____ ____ ____ ____ ____ ____
8. RPTSS7    ____ ____ ____ ____ ____ ____ ____ ____
AVAILABLE TS
```

```
Screen 4 of 4                     5ESS Switch             _
eqpsu                     OFFICE DATA ADMINISTRATION
(5741-1/2)              PACKET SWITCHING UNIT EQUIPAGE

                   56. DI1 PSU TSIU TIMESLOTS
             3322 2222 2222 1111 1111 1100 0000 0000
             1098 7654 3210 9876 5432 1098 7654 3210
1. RPTSS0    ____ ____ ____ ____ ____ ____ ____ ____
2. RPTSS1    ____ ____ ____ ____ ____ ____ ____ ____
3. RPTSS2    ____ ____ ____ ____ ____ ____ ____ ____
4. RPTSS3    ____ ____ ____ ____ ____ ____ ____ ____
5. RPTSS4    ____ ____ ____ ____ ____ ____ ____ ____
6. RPTSS5    ____ ____ ____ ____ ____ ____ ____ ____
7. RPTSS6    ____ ____ ____ ____ ____ ____ ____ ____
8. RPTSS7    ____ ____ ____ ____ ____ ____ ____ ____
AVAILABLE TS
```

Figure 1 SAMPLE EQPSU FORM 5E15 SOFTWARE RELEASE

```
Screen 1 of 4                     5ESS Switch
eqpsu                     OFFICE DATA ADMINISTRATION
(5741-1/2)              PACKET SWITCHING UNIT EQUIPAGE

 *1. SWITCHING MODULE   002          #12. SG 0 COMMON CONTROL EQST O
 *2. PSU                _            #13. SG 0 COMMON CONTROL CLI  ________
```

```
 #3. PSU TYPE           PSU1         #14. SG 1 COMMON CONTROL EQST O
  4. COM ADDR           002          #15. SG 1 COMMON CONTROL CLI  ________
  5. CRIT PSU           N
  6. INTF UNIT          0
 #7. CONTROL GROUP      _
 #8. CONTROL PORT       __
 #9. EQUIPMENT BAY      ___
 #10. EQUIPMENT VERTICAL__
 #11. EQUIPMENT AISLE   ____
```

```
Screen 2 of 4                    5ESS Switch
eqpsu                     OFFICE DATA ADMINISTRATION
(5741-1/2)              PACKET SWITCHING UNIT EQUIPAGE


16. PIDBx

     PSU   SHLF SIDE 0   SHLF SIDE 1          CONNECT
row SHELF   EQST  CLI     EQST  CLI            TYPE
 1    0      _  ________   _  ________
 2    1      _  ________   _  ________
 3    2      _  ________   _  ________
 4    3      _  ________   _  ________
 5    4      _  ________   _  ________
              PSU            PIDB0/PCT          PIDB 1      PIDB 2      PIDB 3
       row  SHELF   DI/TSIS  PIDB/SLOT EQ    DG  DP EQ   DG  DP EQ   DG  DP EQ
        1     0          _      __     _     _  __  _    _  __  _    _  __  _
        2     1          _      __     _     _  __  _    _  __  _    _  __  _
        3     2          _      __     _     _  __  _    _  __  _    _  __  _
        4     3          _      __     _     _  __  _    _  __  _    _  __  _
        5     4          _      __     _     _  __  _    _  __  _    _  __  _
```

```
Screen 3 of 4                    5ESS Switch
eqpsu                     OFFICE DATA ADMINISTRATION
(5741-1/2)              PACKET SWITCHING UNIT EQUIPAGE

                   40. DIO PSU TSIU TIMESLOTS
             3322 2222 2222 1111 1111 1100 0000 0000
             1098 7654 3210 9876 5432 1098 7654 3210
1. RPTSS0    ____ ____ ____ ____ ____ ____ ____ ____
2. RPTSS1    ____ ____ ____ ____ ____ ____ ____ ____
```

```
3. RPTSS2    ____ ____ ____ ____ ____ ____ ____ ____
4. RPTSS3    ____ ____ ____ ____ ____ ____ ____ ____
5. RPTSS4    ____ ____ ____ ____ ____ ____ ____ ____
6. RPTSS5    ____ ____ ____ ____ ____ ____ ____ ____
7. RPTSS6    ____ ____ ____ ____ ____ ____ ____ ____
8. RPTSS7    ____ ____ ____ ____ ____ ____ ____ ____
AVAILABLE TS
```

```
Screen 4 of 4                    5ESS Switch            _
eqpsu                     OFFICE DATA ADMINISTRATION
(5741-1/2)              PACKET SWITCHING UNIT EQUIPAGE

                   57. DI1 PSU TSIU TIMESLOTS
             3322 2222 2222 1111 1111 1100 0000 0000
             1098 7654 3210 9876 5432 1098 7654 3210
1. RPTSS0    ____ ____ ____ ____ ____ ____ ____ ____
2. RPTSS1    ____ ____ ____ ____ ____ ____ ____ ____
3. RPTSS2    ____ ____ ____ ____ ____ ____ ____ ____
4. RPTSS3    ____ ____ ____ ____ ____ ____ ____ ____
5. RPTSS4    ____ ____ ____ ____ ____ ____ ____ ____
6. RPTSS5    ____ ____ ____ ____ ____ ____ ____ ____
7. RPTSS6    ____ ____ ____ ____ ____ ____ ____ ____
8. RPTSS7    ____ ____ ____ ____ ____ ____ ____ ____
AVAILABLE TS
```

Figure 2 SAMPLE EQPSU FORM 5E16 SOFTWARE RELEASES

```
Screen 1 of 4                    5ESS Switch
eqpsu                     OFFICE DATA ADMINISTRATION
(5741-1/2)              PACKET SWITCHING UNIT EQUIPAGE

 *1. SWITCHING MODULE ___             #9. EQUIPMENT BAY            ___
 *2. PSU              _              #10. EQUIPMENT VERTICAL       __
     INTF TYPE        PICB           #11. EQUIPMENT AISLE          ____
  4. COM ADDR         ___             12. SG 0 TYPE                PSU1
  5. CRIT PSU         N              #13. SG 0 COMMON CONTROL EQST O
  6. INTF UNIT        0              #14. SG 0 COMMON CONTROL CLI  ________
```

```
 #7. CONTROL GROUP    _                15. SG 1 TYPE                PSU1
 #8. CONTROL PORT     __              #16. SG 1 COMMON CONTROL EQST O
                                      #17. SG 1 COMMON CONTROL CLI  ________
```

```
Screen 2 of 4                    5ESS Switch
eqpsu                     OFFICE DATA ADMINISTRATION
(5741-1/2)              PACKET SWITCHING UNIT EQUIPAGE


18. PIDBx

     PSU   SHLF SIDE 0   SHLF SIDE 1          CONNECT
row SHELF   EQST  CLI     EQST  CLI            TYPE
 1    0      _  ________   _  ________
 2    1      _  ________   _  ________
 3    2      _  ________   _  ________
 4    3      _  ________   _  ________
 5    4      _  ________   _  ________
             PSU            PIDB0/PCT          PIDB 1      PIDB 2      PIDB 3
       row  SHELF   DI/TSIS  PIDB/SLOT EQ    DG  DP EQ   DG  DP EQ   DG  DP EQ
        1     0          _      __     _     _  __  _    _  __  _    _  __  _
        2     1          _      __     _     _  __  _    _  __  _    _  __  _
        3     2          _      __     _     _  __  _    _  __  _    _  __  _
        4     3          _      __     _     _  __  _    _  __  _    _  __  _
        5     4          _      __     _     _  __  _    _  __  _    _  __  _
```

```
Screen 3 of 4                    5ESS Switch
eqpsu                     OFFICE DATA ADMINISTRATION
(5741-1/2)              PACKET SWITCHING UNIT EQUIPAGE

                   42. DI0 PSU TSIU TIMESLOTS
             3322 2222 2222 1111 1111 1100 0000 0000
             1098 7654 3210 9876 5432 1098 7654 3210
1. RPTSS0    ____ ____ ____ ____ ____ ____ ____ ____
2. RPTSS1    ____ ____ ____ ____ ____ ____ ____ ____
3. RPTSS2    ____ ____ ____ ____ ____ ____ ____ ____
4. RPTSS3    ____ ____ ____ ____ ____ ____ ____ ____
5. RPTSS4    ____ ____ ____ ____ ____ ____ ____ ____
6. RPTSS5    ____ ____ ____ ____ ____ ____ ____ ____
7. RPTSS6    ____ ____ ____ ____ ____ ____ ____ ____
8. RPTSS7    ____ ____ ____ ____ ____ ____ ____ ____
AVAILABLE TS
```

```
Screen 4 of 4                    5ESS Switch            _
eqpsu                     OFFICE DATA ADMINISTRATION
(5741-1/2)              PACKET SWITCHING UNIT EQUIPAGE
```

```
                  59. DI1 PSU TSIU TIMESLOTS
             3322 2222 2222 1111 1111 1100 0000 0000
             1098 7654 3210 9876 5432 1098 7654 3210
1. RPTSS0    ____ ____ ____ ____ ____ ____ ____ ____
2. RPTSS1    ____ ____ ____ ____ ____ ____ ____ ____
3. RPTSS2    ____ ____ ____ ____ ____ ____ ____ ____
4. RPTSS3    ____ ____ ____ ____ ____ ____ ____ ____
5. RPTSS4    ____ ____ ____ ____ ____ ____ ____ ____
6. RPTSS5    ____ ____ ____ ____ ____ ____ ____ ____
7. RPTSS6    ____ ____ ____ ____ ____ ____ ____ ____
8. RPTSS7    ____ ____ ____ ____ ____ ____ ____ ____
AVAILABLE TS
```

Figure 3 SAMPLE EQPSU FORM 5E18(1) THROUGH 5E19(1) SOFTWARE RELEASES

```
Screen 1 of 5                    5ESS Switch
eqpsu                     OFFICE DATA ADMINISTRATION
(5741-1/2)              PACKET SWITCHING UNIT EQUIPAGE

 *1. SWITCHING MODULE ___             #10. EQUIPMENT BAY          ___
 *2. PSU              _              #11. EQUIPMENT VERTICAL      __
     INTF TYPE        PICB           #12. EQUIPMENT AISLE         ____
  4. COM ADDR         ___
  5. CRIT PSU         N
  6. CSU              N
  7. INTF UNIT        0
 #8. CONTROL GROUP    _
 #9. CONTROL PORT     __
```

```
Screen 2 of 5                    5ESS Switch
eqpsu                     OFFICE DATA ADMINISTRATION
(5741-1/2)              PACKET SWITCHING UNIT EQUIPAGE

  13. SG 0 TYPE                PSU1           SG 0 CF SHELF        0
 #14. SG 0 COMMON CONTROL EQST O              SG 1 CF TYPE         CF4
 #15. SG 0 COMMON CONTROL CLI  ________       SG 1 CF SHELF        0
  16. SG 1 TYPE                PSU1
 #17. SG 1 COMMON CONTROL EQST O
 #18. SG 1 COMMON CONTROL CLI  ________
      SG 0 CF TYPE             CF4
```

```
Screen 3 of 5                    5ESS Switch
eqpsu                     OFFICE DATA ADMINISTRATION
```

```
(5741-1/2)              PACKET SWITCHING UNIT EQUIPAGE


23. PIDBx

     PSU      SHLF SIDE 0       SHLF SIDE 1             CONNECT
row SHELF   EQST  CLI     PF  EQST  CLI     PF           TYPE
 1    0      _  ________  ___  _  ________  ___
 2    1      _  ________  ___  _  ________  ___
 3    2      _  ________  ___  _  ________  ___
 4    3      _  ________  ___  _  ________  ___
 5    4      _  ________  ___  _  ________  ___
             PSU            PIDB0/PCT          PIDB 1      PIDB 2      PIDB 3
       row  SHELF   DI/TSIS  PIDB/SLOT EQ    DG  DP EQ   DG  DP EQ   DG  DP EQ
        1     0          _      __     _     _  __  _    _  __  _    _  __  _
        2     1          _      __     _     _  __  _    _  __  _    _  __  _
        3     2          _      __     _     _  __  _    _  __  _    _  __  _
        4     3          _      __     _     _  __  _    _  __  _    _  __  _
        5     4          _      __     _     _  __  _    _  __  _    _  __  _
```

```
Screen 4 of 5                    5ESS Switch
eqpsu                     OFFICE DATA ADMINISTRATION
(5741-1/2)              PACKET SWITCHING UNIT EQUIPAGE

                   49. DI0 PSU TSIU TIMESLOTS
             3322 2222 2222 1111 1111 1100 0000 0000
             1098 7654 3210 9876 5432 1098 7654 3210
1. RPTSS0    ____ ____ ____ ____ ____ ____ ____ ____
2. RPTSS1    ____ ____ ____ ____ ____ ____ ____ ____
3. RPTSS2    ____ ____ ____ ____ ____ ____ ____ ____
4. RPTSS3    ____ ____ ____ ____ ____ ____ ____ ____
5. RPTSS4    ____ ____ ____ ____ ____ ____ ____ ____
6. RPTSS5    ____ ____ ____ ____ ____ ____ ____ ____
7. RPTSS6    ____ ____ ____ ____ ____ ____ ____ ____
8. RPTSS7    ____ ____ ____ ____ ____ ____ ____ ____
AVAILABLE TS
```

```
Screen 5 of 5                    5ESS Switch            _
eqpsu                     OFFICE DATA ADMINISTRATION
(5741-1/2)              PACKET SWITCHING UNIT EQUIPAGE

                   66. DI1 PSU TSIU TIMESLOTS
             3322 2222 2222 1111 1111 1100 0000 0000
             1098 7654 3210 9876 5432 1098 7654 3210
1. RPTSS0    ____ ____ ____ ____ ____ ____ ____ ____
2. RPTSS1    ____ ____ ____ ____ ____ ____ ____ ____
```

```
3. RPTSS2    ____ ____ ____ ____ ____ ____ ____ ____
4. RPTSS3    ____ ____ ____ ____ ____ ____ ____ ____
5. RPTSS4    ____ ____ ____ ____ ____ ____ ____ ____
6. RPTSS5    ____ ____ ____ ____ ____ ____ ____ ____
7. RPTSS6    ____ ____ ____ ____ ____ ____ ____ ____
8. RPTSS7    ____ ____ ____ ____ ____ ____ ____ ____
AVAILABLE TS
```

Figure 4 SAMPLE EQPSU FORM 5E20(1) SOFTWARE RELEASE

```
Screen 1 of 5                    5ESS Switch
eqpsu                     OFFICE DATA ADMINISTRATION
(5741-1/2)              PACKET SWITCHING UNIT EQUIPAGE

 *1. SWITCHING MODULE ___             #10. EQUIPMENT BAY          ___
 *2. PSU              _              #11. EQUIPMENT VERTICAL      __
     INTF TYPE        PICB           #12. EQUIPMENT AISLE         ____
  4. COM ADDR         ___
  5. CRIT PSU         N
  6. CSU              N
  7. INTF UNIT        0
 #8. CONTROL GROUP    _
 #9. CONTROL PORT     __
```

```
Screen 2 of 5                    5ESS Switch
eqpsu                     OFFICE DATA ADMINISTRATION
(5741-1/2)              PACKET SWITCHING UNIT EQUIPAGE

  13. SG 0 TYPE                 PSU1           22. SG 0 PIDB        __
 #14. SG 0 COMMON CONTROL EQST  O              23. SG 0 PIDB EQSTAT _
 #15. SG 0 COMMON CONTROL CLI   ________           SG 1 CF TYPE     CF4
  16. SG 1 TYPE                 PSU1               SG 1 CF SHELF    0
 #17. SG 1 COMMON CONTROL EQST  O              26. SG 1 DI          _
 #18. SG 1 COMMON CONTROL CLI   ________       27. SG 1 PIDB        __
      SG 0 CF TYPE              CF4           28. SG 1 PIDB EQSTAT _
      SG 0 CF SHELF             0
  21. SG 0 DI                   _
```

```
Screen 3 of 5                    5ESS Switch
eqpsu                     OFFICE DATA ADMINISTRATION
```

```
(5741-1/2)              PACKET SWITCHING UNIT EQUIPAGE


29. PIDBx

     PSU      SHLF SIDE 0       SHLF SIDE 1             CONNECT
row SHELF   EQST  CLI     PF  EQST  CLI     PF           TYPE
 1    0      _  ________  ___  _  ________  ___
 2    1      _  ________  ___  _  ________  ___
 3    2      _  ________  ___  _  ________  ___
 4    3      _  ________  ___  _  ________  ___
 5    4      _  ________  ___  _  ________  ___
             PSU            PIDB0/PCT          PIDB 1      PIDB 2      PIDB 3
       row  SHELF   DI/TSIS  PIDB/SLOT EQ    DG  DP EQ   DG  DP EQ   DG  DP EQ
        1     0          _      __     _     _  __  _    _  __  _    _  __  _
        2     1          _      __     _     _  __  _    _  __  _    _  __  _
        3     2          _      __     _     _  __  _    _  __  _    _  __  _
        4     3          _      __     _     _  __  _    _  __  _    _  __  _
        5     4          _      __     _     _  __  _    _  __  _    _  __  _
```

```
Screen 4 of 5                    5ESS Switch
eqpsu                     OFFICE DATA ADMINISTRATION
(5741-1/2)              PACKET SWITCHING UNIT EQUIPAGE

                   55. DI0 PSU TSIU TIMESLOTS
             3322 2222 2222 1111 1111 1100 0000 0000
             1098 7654 3210 9876 5432 1098 7654 3210
1. RPTSS0    ____ ____ ____ ____ ____ ____ ____ ____
2. RPTSS1    ____ ____ ____ ____ ____ ____ ____ ____
3. RPTSS2    ____ ____ ____ ____ ____ ____ ____ ____
4. RPTSS3    ____ ____ ____ ____ ____ ____ ____ ____
5. RPTSS4    ____ ____ ____ ____ ____ ____ ____ ____
6. RPTSS5    ____ ____ ____ ____ ____ ____ ____ ____
7. RPTSS6    ____ ____ ____ ____ ____ ____ ____ ____
8. RPTSS7    ____ ____ ____ ____ ____ ____ ____ ____
AVAILABLE TS
```

```
Screen 5 of 5                    5ESS Switch            _
eqpsu                     OFFICE DATA ADMINISTRATION
(5741-1/2)              PACKET SWITCHING UNIT EQUIPAGE

                   72. DI1 PSU TSIU TIMESLOTS
             3322 2222 2222 1111 1111 1100 0000 0000
             1098 7654 3210 9876 5432 1098 7654 3210
1. RPTSS0    ____ ____ ____ ____ ____ ____ ____ ____
2. RPTSS1    ____ ____ ____ ____ ____ ____ ____ ____
```

```
3. RPTSS2    ____ ____ ____ ____ ____ ____ ____ ____
4. RPTSS3    ____ ____ ____ ____ ____ ____ ____ ____
5. RPTSS4    ____ ____ ____ ____ ____ ____ ____ ____
6. RPTSS5    ____ ____ ____ ____ ____ ____ ____ ____
7. RPTSS6    ____ ____ ____ ____ ____ ____ ____ ____
8. RPTSS7    ____ ____ ____ ____ ____ ____ ____ ____
AVAILABLE TS
```

Figure 5 SAMPLE EQPSU FORM 5E21(1) AND LATER SOFTWARE RELEASES

Copyright © 2006 Lucent Technologies

SEC. 23: 5742 RECORD
PACKET SWITCHING UNIT PROTOCOL
HANDLER PACK EQUIPAGE FORM - EQPSUPH

1. GENERAL

The 5742/5876 Packet Switching Unit Protocol Handler Pack Equipage Record is available with 5E3 and later Software Releases. It is used to define the Packet Switching Unit Protocol Handlers equipped in the 5ESS Switch.

22.3 (5742) is the original Recent Change View to grow in a PSU shelf. It is keyed by SM, PSU and SHELF, and until the iPS feature, it only applied to shelves 1-4. It also contains the PH MIN SPARE values for each PH TYPE. With the introduction of the iPS feature (99-5E-8647), 22.3 now also supports shelf 0 for iPS units only. For iPS, 22.3 is used to grow iPS-2e shelves. 22.41 (5876) is the new Recent Change View to grow in an iPS-h shelf. It is keyed by SM, PSU and SHELF. PHs supported on the iPS-h shelf support sparing and would use PH MIN SPARE fields on this view.

The number of operational PHs (EQST 0) defined on the EQPSUPH form for this SWITCHING MODULE and PSU SHELF combination minus the number of DSL GROUPS (see next paragraph) for this SWITCHING MODULE and PSU SHELF must be greater than or equal to the MINIMUM NUMBER OF SPARE PHs.

DSL GROUPS are the value expressed in the second and third digits of the following fields:

- D ISCN, PPB1 and/or PPB2 ISCN on a DSL form (5907 Record);
- ODB ISCN, ISCN1 and ISCN2 on a DLSUSR form (5908 Record);
- ISCN on a OSPSDSL form (5411 Record);
- ISCN (in LINK DATA list) on a DSLAP form (5963 Record);
- TMC PRI and NPRI ISCNs, EOC PRI and NPRI ISCNs on an RTERM form (5174 Record).

1.1 Protocol Handler 3

The PH3 feature, available in 5E6 and later Software Releases, increases existing PH2 (Protocol Handler 2) processor memory from 1 MB to 4 MB to increase throughput and reduce packet delay. The PH3 will function the same as the existing PH2, therefore, PH2s and PH3s will be allowed on the same Packet Switching Unit (PSU) shelf in the PSU.

1.2 Recent Change View

The corresponding Recent Change views for this form are 22.3 and 22.41.

2. FORM AND RECORD ENTRIES

2.1 BASE AND CONTROL, ESS UNIT

Enter the Base and Control Number and office name on each record.

2.2 *SWITCHING MODULE

Copyright © 2006 Lucent Technologies

Description: The SM Number.
Valid Entries: 1 - 192

Data Rules:

Each SM entered on this form must also be defined on the EQPSU form (5741-1/2 Record) for the PSU on this SM.

2.3 * PSU

Description: Enter the Packet Switching Unit Number. This field supports the Double PSU Packet Bus feature (99-5E-7797). (See Division 2, Section 4A607.)

Software Release: 5E16(1) and later.
Required Field.
Valid Entries: 0 - 1

Data Rules:

When PSU is "1":

PH CLI must be 00001800 (PH4), 00002800 (PH22), 00000010 (PHA1), 00000008 (PHV4), 00010000 (PHA2), 00000020 (PHV5), 00020000 (PHE2), 00080000 (PHE3), 00100000 (PHE4), 00000040 (PHV6), or 00400000 (PHV7A).

PH2 MIN SPARE must be left blank.

PH3 MIN SPARE must be left blank.

PH31 MIN SPARE must be left blank.

PH33 MIN SPARE must be left blank.

PHV1 MIN SPARE must be left blank.

PHV2 MIN SPARE must be left blank.

PHV3 MIN SPARE must be left blank.

2.4 * PSU SHELF

Description: Enter the PSU SHELF number on which the Protocol Handler is equipped.
Valid Entries: 0 - 4

Data Rules:

The PSU SHELF defined here must also be defined on the EQPSU form.

The number of PHs on each shelf must be greater than or equal to the number of channel groups reserved on a SMPH (Switching Module Protocol Handler) hardware type.

PROTOCOL HANDLERS (PH) and PCT LINKS

These fields (Section 2.5 - Section 2.6) are used to define the Equipment Status of the Protocol Handlers.

Copyright © 2006 Lucent Technologies

For each Protocol Handler entry for 5E6 and later, both EQST and PH CLI must be entered. If both are not entered, then leave these fields blank.

2.5 EQST

Description: Enter the Equipment Status of the Protocol Handler circuit. New offices and equipment additions require the Operational status. The hierarchy of Equipment Status, from lowest to highest, are Unequipped, Growth and Operational.

Valid EQST Entries

Entry	Definition
U	Unequipped
G	Growth
O	Operational

Data Rules:

During off-line ODA database retrofits, values other than 'O' may exist when the EQST value entered here is lower than or equal to the two SHLF SIDE EQST values for the given shelf on the EQPSU form.

2.6 PH CLI

Description: Enter the PH CLI (Change Level Indicator) value. For a listing of valid CLI values, J-Drawing and list combinations, see Division 8, Section 1.The value 400000 was added for PHV7A (Protocol Handler for Voice 7A) for the PHV7 feature (99-5E-8744).

Valid Entries: 0 - 7ffffff (hexadecimal)

Valid PH CLI Entries

PH	CLI Entry
PH2	100
PH3	200 or a00
PH4	1800
PH22	2800
PH31	8800
PH33	880
PHV1	1
PHV2	2
PHV3	4
PHV4	8
PHV5	20
PHV6	40
PHA1	10
PHA2	10000
PHE2	20000
PHE3	80000
PHE4	100000
400000	PHV7A, PHV7AT

Data Rules:

When PH CLI is 100, PH2 MIN SPARE must be entered and must be greater than 0. When PH CLI is 200, PH3 MIN SPARE must be entered and must be greater than 0.

The number of operational PHV2s assigned for a given PSU Shelf, minus the number of PHV2 Logical Groups assigned to that PSU Shelf, must be greater than or equal to the PHV2 MIN SPARE value specified for that PSU Shelf. (i.e., No. of Operational PHV2s - No. of PHV2 Logical Groups >= PHV2 MIN SPARE).

The number of PHV2 Logical Groups assigned is obtained from the corresponding PSUGP form where PH

Copyright © 2006 Lucent Technologies

TYPE is "PHV2". The PHV2 MIN SPARE value is specified on the EQPSUPH form.

The number of operational PH3s assigned for a given PSU Shelf, minus the number of PH3 Logical Groups assigned to that PSU Shelf, must be greater than or equal to the PH3 MIN SPARE value specified for that PSU Shelf (i.e., No. of Operational PH3s - No. of PH3 Logical Groups >= PH3 MIN SPARE). The number of PH3 Logical Groups assigned is obtained from the corresponding PSUGP form where PH TYPE is "PH3".

There can be at most 8 PH CLI fields with a value of 10 (hexadecimal) when EQST is "0".

The number of operational PHV3s assigned for a given PSU Shelf, minus the number of PHV3 Logical Groups assigned to that PSU Shelf, must be greater than or equal to the PHV3 MIN SPARE value specified for that PSU Shelf (i.e., No. of Operational PHV3s - No. of PHV3 Logical Groups >= PHV3 MIN SPARE). The number of operational PHV3s is obtained from the EQPSUPH form where PH CLI is 00000004 and EQST is "O". The number of PHV3 Logical Groups assigned is obtained from the corresponding PSUGP form where PH TYPE is "PHV3". The PHV3 MIN SPARE is specified on the EQPSUPH form.

The number of operational PHV4s assigned for a given PSU Shelf, minus the number of PHV4 Logical Groups assigned to that PSU Shelf, must be greater than or equal to the PHV4 MIN SPARE value specified for that PSU Shelf (i.e., No.of Operational PHV4s - No.of PHV4 Logical Groups >= PHV4 MIN SPARE). The number of operational PHV4s is obtained from the EQPSUPH form where PH CLI is 00000008 and EQST is "O". The number of PHV4 Logical Groups assigned is obtained from the corresponding PSUGP form where PH TYPE is "PHV4". The PHV4 MIN SPARE is specified on the EQPSUPH form.

The number of operational PHV5s assigned for a given PSU Shelf, minus the number of PHV5 Logical Groups assigned to that PSU Shelf, must be greater than or equal to the PHV5 MIN SPARE value specified for that PSU Shelf (i.e., No. of Operational PHV5s - No.of PHV5 Logical Groups >= PHV5 MIN SPARE). The number of operational PHV5s is obtained from the EQPSUPH form where PH CLI is 00000020 and EQST is "O". The number of PHV5 Logical Groups assigned is obtained from the corresponding PSUGP form where PH TYPE is "PHV5". The PHV5 MIN SPARE is specified on the EQPSUPH form.

For 5E20(1) and later:

When PH CLI is 400000, PCT LINK row 1 must be entered.

When PH CLI is not 400000, PCT LINK row 1 must not be entered.

Only PCT LINK1 Fields can be provisioned when PH CLI is 400000.

When PH CLI is not 400000 or 800000, PCT LINK row 2-4 must be blank.

PH CLI 400000 or 800000 cannot be provisioned in a VCDX office.

When PH CLI is 2800 (PH22), the hexadecimal value for both SHLF SIDE 0 CLI and SHLF SIDE 1 CLI on the EQPSU form must be 104 or 304.

When PH CLI on this form is 1 (PHV1), 2 (PHV2), 4 (PHV3), 8 (PHV4), 10000 (PHA2), or 20000 (PHE2), the hexadeciaml value for both SHLF SIDE 0 CLI and SHLF SIDE 1 CLI on the EQPSU form (5741 Record) must be 3, 104 or 304.

When PH CLI is 10000, 20000, 80000, or 100000 there must be a corresponding EQIM form (5700 Record) or a matching SM2000 EQIM form.

Copyright © 2006 Lucent Technologies

When PH CLI is 400000 (PHV7A), the PSU must have an SG0/SG1 TYPE of "IPS" on the EQPSU form.

When PH CLI is 400000 (PHV7A), SG0/SG1 PIDB EQSTST must be "O" on the EQPSU form.

PHV7 (PH CLI - 400000h) can be defined on the EQPSUPH FORM only when the corresponding tuple defined on EQPSU FORM has a SG 0/1 TYPE of "IPS".

2.7 PCTLINK1

Description: The PCT LINK field is used by PHV7. This is a no change field.

Software Releases: 5E20(1) and later.

2.8 TSIS

Description: Enter the Time Slot Interchanger Slice number.

Software Releases: 5E20(1) and later.
Valid entries are 1 - 9

2.9 SLOT

Description: Enter the Time Slot Interchanger Slice Slot number.

Software Releases: 5E20(1) and later.
Valid entries are Blank or 0 - 3

2.10 LNK1EQST

Description: Enter the Time Slot Interchanger Slice Slot number.

Valid LNK1EQST Entries

Entry	Definition
U	Unequipped
G	Growth
O	Operational

Software Releases: 5E20(1) and later.

2.11 PCTLINK2

Description: The PCT LINK field is used by PHV7. This is a no change field.

Software Releases: 5E20(1) and later.

2.12 TSIS

Description: Enter the Time Slot Interchanger Slice number.

Software Releases: 5E20(1) and later.
Valid entries are 1 - 9

2.13 SLOT

Description: Enter the Time Slot Interchanger Slice Slot number.

Copyright © 2006 Lucent Technologies

Software Releases: 5E20(1) and later.
Valid entries are Blank or 0 - 3

2.14 LNK2EQST

Description: Enter the Time Slot Interchanger Slice Slot number.

Valid LNK2EQST Entries

Entry	Definition
U	Unequipped
G	Growth
O	Operational

Software Releases: 5E20(1) and later.

2.15 PCTLINK3

Description: The PCT LINK field is used by PHV7. This is a no change field.

Software Releases: 5E20(1) and later.

2.16 TSIS

Description: Enter the Time Slot Interchanger Slice number.

Software Releases: 5E20(1) and later.
Valid entries are 1 - 9

2.17 SLOT

Description: Enter the Time Slot Interchanger Slice Slot number.

Software Releases: 5E20(1) and later.
Valid entries are Blank or 0 - 3

2.18 LNK3EQST

Description: Enter the Time Slot Interchanger Slice Slot number.

Valid LNK3EQST Entries

Entry	Definition
U	Unequipped
G	Growth
O	Operational

Software Releases: 5E20(1) and later.

2.19 PCTLINK4

Description: The PCT LINK field is used by PHV7. This is a no change field.

Software Releases: 5E20(1) and later.

2.20 TSIS

Copyright © 2006 Lucent Technologies

Description: Enter the Time Slot Interchanger Slice number.

Software Releases: 5E20(1) and later.
Valid entries are 1 - 9

2.21 SLOT

Description: Enter the Time Slot Interchanger Slice Slot number.

Software Releases: 5E20(1) and later.
Valid entries are Blank or 0 - 3

2.22 LNK4EQST

Description: Enter the Time Slot Interchanger Slice Slot number.

Valid LNK4EQST Entries

Entry	Definition
U	Unequipped
G	Growth
O	Operational

Software Releases: 5E20(1) and later.

2.23 PH2 MIN SPARE

Description: Enter the number of PH2s that are to be designated as spares on this PSU shelf.

Software Releases: 5E6 and later
Valid entries are 0 - 15

Data Rules:

The number of spare and assigned PH2s cannot be greater than the number of PH2s actually equipped on the EQPSUPH form.

2.24 PH3 MIN SPARE

Description: Enter the number of PH3s that are to be designated as spares on this PSU shelf.

Software Releases: 5E6 and later
Valid entries: 0 - 15

Data Rules:

The number of spare and assigned PH3s cannot be greater than the number of PH3s actually equipped on the EQPSUPH form.

For 5E10 and later, the number of operational PH3s assigned for a given PSU Shelf minus the number of PH3 Logical Groups assigned to that PSU Shelf, must be greater than or equal to the PH3 MIN SPARE specified for that PSU Shelf.

For a given PSU Shelf:

The number of operational PH3s - the number of Ph3 Logical Groups greater than or equal to PH3 MIN

Copyright © 2006 Lucent Technologies

SPARE.

The number of operational PH3s is obtained from the EQPSUPH form where PH CLI is 200 or a00, and EQST is "O". The number of PH3 Logical Groups assigned is obtained from the corresponding PSUGP form where PH TYPE is "PH3".

2.25 PH4 MIN SPARE

Description: Enter the minimum number of spare PH4s for this PSU shelf. This field supports the provisioning of the minimum number of spare protocol handlers for PH4s.

Software Release: 5E10 and later
Valid Entries: 0 - 15

Data Rules:

The number of spare and assigned PH4s cannot be greater than the number of PH4s actually equipped on the EQPSUPH form.

For 5E10 and later, the number of operational PH4s assigned for a given PSU Shelf minus the number of PH4 Logical Groups assigned to that PSU Shelf, must be greater than or equal to the PH4 MIN SPARE specified for that PSU Shelf.

For a given PSU Shelf:

The number of operational PH4s - the number of PH4 Logical Groups = PH4 MIN SPARE.

The number of operational PH4s is obtained from the EQPSUPH form where PH CLI is 1800 and EQST is "O". The number of PH4 Logical Groups assigned is obtained from the corresponding PSUGP form where PH TYPE is "PH4".

2.26 PH22 MIN SPARE

Description: Enter the minimum number of spare PH22s for this PSU shelf.

Software Release: 5E14 and later
Valid Entries: 0 - 15

Data Rules:

The number of spare and assigned PH22s cannot be greater than the number of PH22s actually equipped on the EQPSUPH form.

For 5E14 and later, the number of operational PH22s assigned for a given PSU Shelf minus the number of PH22 Logical Groups assigned to that PSU Shelf, must be greater than or equal to the PH22 MIN SPARE specified for that PSU Shelf.

For a given PSU Shelf:

The number of operational PH22s - the number of PH22 Logical Groups = PH22 MIN SPARE.

The number of operational PH22s is obtained from the EQPSUPH form where PH CLI is 2800 and EQST is "O". The number of PH22 Logical Groups assigned is obtained from the corresponding PSUGP form where PH TYPE is "PH22".

Copyright © 2006 Lucent Technologies

2.27 PH31 MIN SPARE

Description: This field indicates the number of operational minimum PH31 spares to be set aside for backup use. This field is added to support the SAAL (Signaling ATM (Asynchronous Transfer Mode) Adaptation Layer) SS7 (Signaling System 7) High Speed Signaling Links feature (99-5E-7451). For more information on this feature, see Division 2, Section 4A670.

Software Release: 5E16(2) and later
Valid Entries: 0 - 15

Data Rules:

For 5E16(2) FR 1, the number of operational PH31s are obtained from the EQPSUPH form where PH CLI is "00008800" and EQST is "O". The number of PH31 logical groups assigned is obtained from the PSUGP form (5949 Record) where PH TYPE is "PH31".

PH31s and PH33s can only reside on DF2 (Data Fanout with PCT) versions of the PSU Shelf.

When PHCLI is 00000020 (PHV5) or 00020000 (PHE2) on the EQPSUPH FORM,then PHV5 and PHE2 must be on DF2 (Data Fanout with PCT) versions of the PSU Shelf on EQPSU FORM.

When the PHCLI value on the EQPSUPH form is 00002800 and these PH22's reside on a TRUNK form where TRKCLS on the corresponding TKGRP form is "PKTPIPE" or "FRBC", then the hexadecimal CLI value for both shelf sides must be 104 or 304. PH22's may only reside on DF2 (Data Fanout (DF2) with PCT links) or DF2B (New DF2 pack with hardware and firmware modifcation).

When PHCLI is 00000040 (PHV6) on the EQPSUPH form, the PHV6 must be on either DF2 or DF2B (New DF2 pack with hardware and firmware modifcation) version of the PSU Shelf. The DF2 is indicated by setting the hexadecimal CLI value to 104 for both shelf sides on the EQPSU form. The DF2B is indicated by setting the hexadecimal CLI value to 304 for both shelf sides on the EQPSU form.

2.28 PH33 MIN SPARE

Description: This field indicates the number of operational minimum PH33 spares for this PSU shelf set aside for backup use. This field is added to support the SIP (Session Initiation Protocol) for Packet Trunking feature (99-5E-8382). For more information on this feature, see Division 2, Section 4A684.

Software Release: 5E16(2) FR 3 and later
Valid Entries: 0 - 15

Data Rules:

For 5E16(2) FR 3, the number of operational PH33s are obtained from the EQPSUPH form where PH CLI is "0000880" and EQST is "O". The number of PH33 logical groups assigned is obtained from the PSUGP form (5949 Record) where PH TYPE is "PH33".

2.29 PHV1 MIN SPARE

Description: Enter the minimum number of spare protocol handlers for voice (version 1) (8 kilobit vocoder) for this PSU shelf. This field supports the provisioning of the minimum number of spare protocol handlers for voice for the CDMA feature. For more information on this feature see Division 2, Section 8B.

Software Release: 5E10 and later

Copyright © 2006 Lucent Technologies

Valid Entries: 0 - 15

2.30 PHV2 MIN SPARE

Description: Enter the minimum number of spare protocol handlers for voice (version 2) (13 kilobit vocoder) for this PSU shelf. This field was added to support the provisioning of the minimum number of spare protocol handlers for voice for the CDMA feature. For more information on this feature see Division 2, Section 8B.

Software Release: 5E10 and later
Valid Entries: 0 - 15

2.31 PHV3 MIN SPARE

Description: Enter the minimum number of spare protocol handlers for voice (version 3) (8 or 13 kilobit vocoder) for this PSU shelf. This field was added to support the provisioning of the minimum number of spare protocol handlers for voice for the CDMA feature. For more information on this feature, see Division 2, Section 8F.

Software Release: 5E11 and later
Valid Entries: 0 - 15

2.32 PHV4 MIN SPARE

Description: Enter the minimum number of spare protocol handlers for voice (version 4) (8 or 13 kilobit vocoder) for this PSU shelf. This field was added to support the provisioning of the minimum number of spare protocol handlers for voice for the CDMA feature. For more information on this feature, see Division 2, Section 8J.

Software Release: 5E12 and later.
Valid Entries: 0 - 15

2.33 PHV5 MIN SPARE

Description: Enter the minimum number of spare protocol handlers for voice (version 5) (8 or 13 kilobit vocoder) for this PSU shelf. This field was added to support the provisioning of the minimum number of spare protocol handlers for voice for the PHV5 feature. For more information on this feature, see Division 2, Section 8AB.

Software Release: 5E16(1) and later.
Valid Entries: 0 - 15

2.34 PHA2 MIN SPARE

Description: This field indicates the number of PHA2s there are on a particular shelf. This field supports the PHA2/PHE2 on PH30 feature. For more information on this feature, see Division 2, Section 5BM.

Software Release: 5E16(1) and later.
Valid Entries: 0 - 15

2.35 PHE2 MIN SPARE

Description: This field indicates the number of PHE2s there are on a particular shelf. This field supports the PHA2/PHE2 on PH30 feature. For more information on this feature, see Division 2, Section 5BM.

Copyright © 2006 Lucent Technologies

Software Release: 5E16(1) and later.
Valid Entries: 0 - 15

Data Rules:

When the SIP for Packet Trunking has been purchased (SFID 684 has been acivated), then the total number of operational PHE2s on the EQPSUPH form (5744 Record) cannot exceed 48 per SWITCHING MODULE and PSU combination, else total number of operational PHE2s on the EQPSUPH form cannot exceed 10 per SWITCHING MODULE and PSU combination.

2.36 PHV6 MIN SPARE

Description: This field specifies the minimum number of spare PHV6s for the assigned PSU shelf.

Software Release: 5E18(1) and later
Valid Entries: 0 - 15

Data Rules:

The number of operational PHV6s assigned for a given PSU Shelf minus the number of PHV5 Logical groups assigned to that PSU Shelf, must be greater than or equal to the PHV6 MIN SPARE specified for that PSU Shelf.

2.37 BRI RDTA PIDB TS

Description: Enter the number of PIDB timeslots reserved for the BRI RDTA (Remote Digital Test Access) feature on this PSU Shelf.

Software Release: 5E7 and later
Valid Entries: 2, 4, or 6

```
eqpsuph                          5ESS Switch
SCREEN 1 OF 2             OFFICE DATA ADMINISTRATION
(5742)                PSU PROTOCOL HANDLER PACK EQUIPAGE

*1. SWITCHING MODULE ___              3. PROTOCOL HANDLERS (PH)
*2. PSU SHELF        _      ROW PH  EQST PH CLI   ROW PH  EQST PH CLI
                             1   0   _   ________   9   8  _   ________
                             2   1   _   ________  10   9  _   ________
                             3   2   _   ________  11  10  _   ________
                             4   3   _   ________  12  11  _   ________
                             5   4   _   ________  13  12  _   ________
                             6   5   _   ________  14  13  _   ________
                             7   6   _   ________  15  14  _   ________
                             8   7   _   ________  16  15  _   ________
```

```
eqpsuph                          5ESS Switch           _
SCREEN 2 OF 2             OFFICE DATA ADMINISTRATION
(5742)                PSU PROTOCOL HANDLER PACK EQUIPAGE
```

```
12. PH2 MIN SPARE    __
13. PH3 MIN SPARE    __
14. PH4 MIN SPARE    __
15. PH22 MIN SPARE   __
16. PHV1 MIN SPARE   __
17. PHV2 MIN SPARE   __
18. PHV3 MIN SPARE   __
19. PHV4 MIN SPARE   __
20. BRI RDTA PIDB TS _
```

Figure 1 SAMPLE EQPSUPH FORM 5E14 THROUGH 5E15 SOFTWARE RELEASES

```
eqpsuph                          5ESS Switch
SCREEN 1 OF 2            OFFICE DATA ADMINISTRATION
(5742)                PSU PROTOCOL HANDLER PACK EQUIPAGE

*1. SWITCHING MODULE ___             4. PROTOCOL HANDLERS (PH)
*2. PSU              _      ROW PH  EQST PH CLI   ROW PH  EQST PH CLI
*3. PSU SHELF        _       1   0   _   ________   9   8  _   ________
                             2   1   _   ________  10   9  _   ________
                             3   2   _   ________  11  10  _   ________
                             4   3   _   ________  12  11  _   ________
                             5   4   _   ________  13  12  _   ________
                             6   5   _   ________  14  13  _   ________
                             7   6   _   ________  15  14  _   ________
                             8   7   _   ________  16  15  _   ________
```

```
eqpsuph                          5ESS Switch            _
SCREEN 2 OF 2            OFFICE DATA ADMINISTRATION
(5742)                PSU PROTOCOL HANDLER PACK EQUIPAGE

13. PH2 MIN SPARE    __
14. PH3 MIN SPARE    __
15. PH4 MIN SPARE    __
16. PH22 MIN SPARE   __
17. PH31 MIN SPARE   __
18. PHV1 MIN SPARE   __
19. PHV2 MIN SPARE   __
20. PHV3 MIN SPARE   __
21. PHV4 MIN SPARE   __
22. PHV5 MIN SPARE   __
23. BRI RDTA PIDB TS _
```

Figure 2 SAMPLE EQPSUPH FORM 5E16(1) SOFTWARE RELEASES

Copyright © 2006 Lucent Technologies

```
eqpsuph                          5ESS Switch
SCREEN 1 OF 2             OFFICE DATA ADMINISTRATION
(5742)                PSU PROTOCOL HANDLER PACK EQUIPAGE

*1. SWITCHING MODULE ___             4. PROTOCOL HANDLERS (PH)
*2. PSU              _      ROW PH  EQST PH CLI   ROW PH  EQST PH CLI
*3. PSU SHELF        _       1   0   _   _________   9   8  _   _________
                             2   1   _   _________  10   9  _   _________
                             3   2   _   _________  11  10  _   _________
                             4   3   _   _________  12  11  _   _________
                             5   4   _   _________  13  12  _   _________
                             6   5   _   _________  14  13  _   _________
                             7   6   _   _________  15  14  _   _________
                             8   7   _   _________  16  15  _   _________
```

```
eqpsuph                          5ESS Switch            _
SCREEN 2 OF 2             OFFICE DATA ADMINISTRATION
(5742)                PSU PROTOCOL HANDLER PACK EQUIPAGE

13. PH2 MIN SPARE    __
14. PH3 MIN SPARE    __
15. PH4 MIN SPARE    __
16. PH22 MIN SPARE   __
17. PH31 MIN SPARE   __
18. PH33 MIN SPARE   __
19. PHV1 MIN SPARE   __
20. PHV2 MIN SPARE   __
21. PHV3 MIN SPARE   __
22. PHV4 MIN SPARE   __
23. PHV5 MIN SPARE   __
24. BRI RDTA PIDB TS _
```

Figure 3 SAMPLE EQPSUPH FORM 5E16(2) THROUGH 5E17 SOFTWARE RELEASES

```
eqpsuph                          5ESS Switch
SCREEN 1 OF 2             OFFICE DATA ADMINISTRATION
(5742)                PSU PROTOCOL HANDLER PACK EQUIPAGE

*1. SWITCHING MODULE ___             4. PROTOCOL HANDLERS (PH)
*2. PSU              _      ROW PH  EQST PH CLI   ROW PH  EQST PH CLI
*3. PSU SHELF        _       1   0   _   _________   9   8  _   _________
                             2   1   _   _________  10   9  _   _________
                             3   2   _   _________  11  10  _   _________
                             4   3   _   _________  12  11  _   _________
                             5   4   _   _________  13  12  _   _________
```

Copyright © 2006 Lucent Technologies

```
                              6   5   _   _________  14  13  _   _________
                              7   6   _   _________  15  14  _   _________
                              8   7   _   _________  16  15  _   _________
```

```
eqpsuph                              5ESS Switch            _
SCREEN 2 OF 2                OFFICE DATA ADMINISTRATION
(5742)                   PSU PROTOCOL HANDLER PACK EQUIPAGE

13. PH2 MIN SPARE    __
14. PH3 MIN SPARE    __
15. PH4 MIN SPARE    __
16. PH22 MIN SPARE   __
17. PH31 MIN SPARE   __
18. PHV1 MIN SPARE   __
19. PHV2 MIN SPARE   __
20. PHV3 MIN SPARE   __
21. PHV4 MIN SPARE   __
22. PHV5 MIN SPARE   __
23. PHV6 MIN SPARE   __
24. BRI RDTA PIDB TS _
```

Figure 4 SAMPLE EQPSUPH FORM 5E18(1) SOFTWARE RELEASE

```
eqpsuph                              5ESS Switch
SCREEN 1 OF 2                OFFICE DATA ADMINISTRATION
(5742)                   PSU PROTOCOL HANDLER PACK EQUIPAGE

*1. SWITCHING MODULE                     4. PROTOCOL HANDLERS (PH)
*2. PSU                _      ROW PH  EQST PH CLI   ROW PH  EQST PH CLI
*3. PSU SHELF          _       1   0   _   _________   9   8  _   _________
                               2   1   _   _________  10   9  _   _________
                               3   2   _   _________  11  10  _   _________
                               4   3   _   _________  12  11  _   _________
                               5   4   _   _________  13  12  _   _________
                               6   5   _   _________  14  13  _   _________
                               7   6   _   _________  15  14  _   _________
                               8   7   _   _________  16  15  _   _________
```

```
eqpsuph                              5ESS Switch            _
SCREEN 2 OF 2                OFFICE DATA ADMINISTRATION
(5742)                   PSU PROTOCOL HANDLER PACK EQUIPAGE

13. PH2 MIN SPARE  __    25. BRI RDTA PIDB TS _
14. PH3 MIN SPARE  __
```

```
15. PH4 MIN SPARE  __
16. PH22 MIN SPARE __
17. PH31 MIN SPARE __
18. PH33 MIN SPARE __
19. PHV1 MIN SPARE __
20. PHV2 MIN SPARE __
21. PHV3 MIN SPARE __
22. PHV4 MIN SPARE __
23. PHV5 MIN SPARE __
24. PHV6 MIN SPARE __
```

Figure 5 SAMPLE EQPSUPH FORM 5E19(1) SOFTWARE RELEASE

```
eqpsuph                              5ESS Switch
SCREEN 1 OF 5                OFFICE DATA ADMINISTRATION
(5742)                   PSU PROTOCOL HANDLER PACK EQUIPAGE

*1. SWITCHING MODULE ___    *2. PSU _    *3. PSU SHELF _

                      4. PROTOCOL HANDLERS (PH) and PCT LINKS
ROW PH  EQST PH CLI   PCTLINK1 TSIS SLOT LNK1EQST PCTLINK2 TSIS SLOT LNK2EQST
 1   0   _   _________   _      _    _      _        _      _    _      _
 2   1   _   _________   _      _    _      _        _      _    _      _
 3   2   _   _________   _      _    _      _        _      _    _      _
 4   3   _   _________   _      _    _      _        _      _    _      _
 5   4   _   _________   _      _    _      _        _      _    _      _
 6   5   _   _________   _      _    _      _        _      _    _      _
 7   6   _   _________   _      _    _      _        _      _    _      _
 8   7   _   _________   _      _    _      _        _      _    _      _
```

```
eqpsuph                              5ESS Switch
SCREEN 2 OF 5                OFFICE DATA ADMINISTRATION
(5742)                   PSU PROTOCOL HANDLER PACK EQUIPAGE

                      4. PROTOCOL HANDLERS (PH) and PCT LINKS
ROW PH  PCTLINK3 TSIS SLOT LNK3EQST PCTLINK4 TSIS SLOT LNK4EQST
 1   0     _      _    _      _        _      _    _      _
 2   1     _      _    _      _        _      _    _      _
 3   2     _      _    _      _        _      _    _      _
 4   3     _      _    _      _        _      _    _      _
 5   4     _      _    _      _        _      _    _      _
 6   5     _      _    _      _        _      _    _      _
 7   6     _      _    _      _        _      _    _      _
 8   7     _      _    _      _        _      _    _      _
```

```
eqpsuph                              5ESS Switch
```

```
SCREEN 3 OF 5             OFFICE DATA ADMINISTRATION
(5742)                PSU PROTOCOL HANDLER PACK EQUIPAGE

                   4. PROTOCOL HANDLERS (PH) and PCT LINKS
ROW PH  EQST PH CLI   PCTLINK1 TSIS SLOT LNK1EQST PCTLINK2 TSIS SLOT LNK2EQST
  9   8  _   _________    _      _    _      _        _      _    _      _
 10   9  _   _________    _      _    _      _        _      _    _      _
 11  10  _   _________    _      _    _      _        _      _    _      _
 12  11  _   _________    _      _    _      _        _      _    _      _
 13  12  _   _________    _      _    _      _        _      _    _      _
 14  13  _   _________    _      _    _      _        _      _    _      _
 15  14  _   _________    _      _    _      _        _      _    _      _
 16  15  _   _________    _      _    _      _        _      _    _      _
```

```
eqpsuph                          5ESS Switch
SCREEN 4 OF 5             OFFICE DATA ADMINISTRATION
(5742)                PSU PROTOCOL HANDLER PACK EQUIPAGE

            4. PROTOCOL HANDLERS (PH) and PCT LINKS
ROW PH  PCTLINK3 TSIS SLOT LNK3EQST PCTLINK4 TSIS SLOT LNK4EQST
  9   8    _      _    _      _        _      _    _      _
 10   9    _      _    _      _        _      _    _      _
 11  10    _      _    _      _        _      _    _      _
 12  11    _      _    _      _        _      _    _      _
 13  12    _      _    _      _        _      _    _      _
 14  13    _      _    _      _        _      _    _      _
 15  14    _      _    _      _        _      _    _      _
 16  15    _      _    _      _        _      _    _      _
```

```
eqpsuph                          5ESS Switch            _
SCREEN 5 OF 5             OFFICE DATA ADMINISTRATION
(5742)                PSU PROTOCOL HANDLER PACK EQUIPAGE

45. PH2 MIN SPARE  __    57. BRI RDTA PIDB TS _
46. PH3 MIN SPARE  __
47. PH4 MIN SPARE  __
48. PH22 MIN SPARE __
49. PH31 MIN SPARE __
50. PH33 MIN SPARE __
51. PHV1 MIN SPARE __
52. PHV2 MIN SPARE __
53. PHV3 MIN SPARE __
54. PHV4 MIN SPARE __
55. PHV5 MIN SPARE __
56. PHV6 MIN SPARE __
```

Figure 6 SAMPLE EQPSUPH FORM 5E20(1) AND LATER SOFTWARE RELEASES

Copyright © 2006 Lucent Technologies

SEC. 24: 5824 RECORD
INTEGRATED SERVICES ANALOG PACK EQUIPAGE FORM - EQISAP

1. GENERAL

The 5824 Record is available with the 5E3 and later Generic Programs. It is used to define ISLU (Integrated Services Line Unit) or RISLU (Remote Integrated Services Line Unit) analog circuit packs. The circuit packs that can be defined using this form are MAN (Metallic Access Network), RG (Ringing Generator) and HLSC (High Level Service Circuits). If the ISLULC (ISLU Line Card Assignment) form (5942 Record) is equipped with analog Z-Cards or digital U-Cards, the EQISAP form must be assigned with ISMAN (Integrated Services Metallic Access Network) and ISHLSC (Integrated Services High Level Services Circuit) Circuit Pack Types.

If the MTBs are assigned to ISAPs which reside upon an ORM, RSM or TRM, the EQISAP and the MTBs must share the same SITE ID (defined on the EQIM form). In addition, if this is a remote SITE ID (does not reside in the local office), the MTBs must reside on the Common Resource Module (denoted by MASTER MODULE on a corresponding EQSIT form). This rule does not apply to co-located ORMs/TRMs sharing resources (as co-located ORMs/TRMs are not distinguishable from ORMs/TRMs which are not co-located).

For 5E10 and later, when ISLULB form(s) are submitted with U Boards, 1 or 2 (2 if LG is in both 0-7 and 8-15 ranges, 1 if LG is in only one range) EQISAP input forms must be defined with:

- Matching SWITCHING MODULE
- ISLU TYPE is "ISLU2"
- Matching ISLU NUMBER
- CIRCUIT PACK TYPE is "ISMAN"
- CIRCUIT PACK NUMBER is 00 if LG is in 0 - 7; is 01 if LG is in 8 - 15
- EQUIPMENT STATUS associated with U Board. The following is the list of valid association of statuses between U Board and "ISMAN".

SPARE U BOARD STATUS	ISMAN STATUS
U	U, G, O
G	G, O
O	O

For 5E10 and later, when ISLULB form(s) are submitted with spare U Boards, 1 to 4 (depending on the LG and Board position) EQISAP input forms must be defined with

- Matching SWITCHING MODULE
- ISLU TYPE is "ISLU2"
- Matching ISLU NUMBER
- CIRCUIT PACK TYPE is "ISMAN"
- CIRCUIT PACK NUMBER is
    - 00 if LG is 0 and Board is 0

Copyright © 2006 Lucent Technologies

- 01 if LG is 8 and Board is 0
- 10 if LG is 7 and Board is 3
- 11 if LG is 15 and Board is 3

- EQUIPMENT STATUS associated with the spare U Board. The following is the list of valid association of statuses between the spare U Board and "ISMAN".

SPARE U BOARD STATUS	ISMAN STATUS
U	U, G, O
G	G, O
O	O

2. FORM AND RECORD ENTRIES

2.1 BASE AND CONTROL, ESS UNIT

Enter the Base and Control Number and Office Name on each record.

2.2 *SWITCHING MODULE

Description: Enter the Switching Module Number.
Valid Entries: 1 - 192

Data Rules:

The SWITCHING MODULE must be defined on an EQISLU form (5731 Record) or EQRISLU form (5732 Record).

2.3 *(R)ISLU TYPE

Description: Enter the type of this Switching Module.
Default: ISLU
Valid Entries:
For 5E9(2) and earlier: ISLU or RISLU
For 5E10 and later: ISLU, ISLU2 or RISLU

Data Rules:

For a (R)ISLU TYPE of "RISLU" or "ISLU", (R)ISLU NUMBER must be between 0 and 7.

If ISLU TYPE is "ISLU2", CIRCUIT PACK TYPE must not be "ISRG".

2.4 *(R)ISLU NUMBER

Description: Enter the Integrated Services Line Unit Number.
Valid Entries:
For 5E9(2) and earlier: 0 to 7
For 5E10 and later: 0 - 7 for ISLU, or 0 - 42 for ISLU2.

Copyright © 2006 Lucent Technologies

Data Rules:

The (R)ISLU NUMBER must be defined on an EQISLU form (5731 Record) or EQRISLU form (5732 Record).

2.5 *CIRCUIT PACK TYPE

Description: Enter the type of Integrated Services Analog Circuit Pack.

Valid CIRCUIT PACK TYPE Entries

Entry	Description
ISMAN	Integrated Services Metallic Access Network.
ISRG	Integrated Services Ringing Generator.
ISHLSC	Integrated Services High Level Services Circuit.

Data Rules:

If the EQISAP form is submitted with Circuit Pack Type of "ISMAN", the ISLULC form must be submitted with Z/U-Cards in any one of the Line Group Controller (LGC) card positions for this SM and (R)ISLU.

If CIRCUIT PACK TYPE is "ISMAN", and if METALLIC TEST BUS 0 is entered, the CIRCUIT PACK NUMBER must be 00 or 11. If METALLIC TEST BUS 1 is entered, CIRCUIT PACK NUMBER must be 01 or 10.

If an ISLULC form is submitted with Z/U-cards and the LGC in the range of 0 - 7, EQISAP forms must be submitted with MAN Pack 0 assigned (CIRCUIT PACK NUMBER is 00 and 10). If LGC is in the range of 8 - 15, EQISAP forms must be submitted with MAN Pack 1 assigned (CIRCUIT PACK NUMBER is 01 and 11).

ISMAN Circuit Pack Types must be assigned in pairs of Circuit Pack Numbers. The pairs of Circuit Pack Numbers are 00 and 10 or 01 and 11. That is, if a MAN Pack 0 is assigned, then it must be assigned on both Service Groups. A similar rule applies to MAN Pack 1. If only "U" cards are equipped, MAN 00 is required for LGC 00-07 and MAN 01 is required for LGC 08-15.

Every MAN (Metallic Access Network) board has 16 Line Group Buses, 4 Test Buses, 1 Metallic Test Bus, 1 Spare Bus, 1 200 OHM Test Bus, 1 2K OHM Test Bus and 1 Ringing Generator Bus.

If the EQISAP form is submitted with Circuit Pack Type of "ISHLSC" or "ISRG", then another EQISAP form must be submitted with "ISMAN" Circuit Pack Type with the same SWITCHING MODULE, (R)ISLU TYPE and (R)ISLU NUMBER.

2.6 *CIRCUIT PACK NUMBER

Description: Enter the Circuit Pack Number. Circuit Pack Number is made up of the Service Group Number and the circuit number. Service Group is represented by the first character of this field and circuit number is represented by the second character.
Valid Entries: 00, 01, 02, 10, 11 and 12.

Data Rules:

A maximum of one Ringing Generator may be assigned per Service Group. Valid Circuit Pack Numbers for Circuit Pack Type of "ISRG" are 00 and 10.

The Metallic Access Network (MAN) consists of two circuit packs in each Service Group. The MAN contains the access buses used to connect circuits, to provide network paths for ringing, call tests, diagnostics and line testing. Valid Circuit Pack Numbers for Circuit Pack Type of "ISMAN" are 00, 01, 10 and 11.

Each Service Group can be equipped with a maximum of three High Level Service Circuits. Valid Circuit Pack

Copyright © 2006 Lucent Technologies

Numbers for Circuit Pack Type of "ISHLSC" are 00, 01, 02, 10, 11 and 12.

2.7 EQUSTAT

Description: Enter the Equipment Status.

Required Field.
Default: O
Valid Entries:

Valid EQUSTAT Entries	
Entry	**Description**
G	Growth.
O	Operational.
U	Unequipped.

Data Rules:

For new offices and units destined for factory testing, Operational is the only allowed value. During off-line ODA database retrofits, the other values are valid.

Equipment Status for "ISRG" depends upon the "ISMAN" status. If status for ISMAN is U, G or O, then status for ISRG must be U. If status for ISMAN is G or O, then status for ISRG must be G. If status for ISMAN is O, then status for ISRG must be O.

Equipment Status for "ISMAN" and "ISHLSC" depend upon the associated COMMON CONTROL EQST field on either the EQISLU or EQRISLU forms. If status for COMMON CONTROL EQST is U, G or O, then status for ISMAN and ISHLSC must be U. If status for COMMON CONTROL EQST is G or O, then status for ISMAN and ISHLSC must be G. If status for COMMON CONTROL EQST is O, then status for ISMAN and ISHLSC must be O.

2.8 CLI

Description: Enter the eight-digit hexadecimal Change Level Indicator Number of the ISMAN, ISRG and ISHLSC Circuit Pack Types.

Required Field.
Valid Entries: 0 to 7FFFFFFF

For a complete listing of valid CLI values, J-Drawing and list combinations, see Division 8, Section 1.

2.9 METALLIC TEST BUS 0

Description: Enter the MTB 0.

Data Rules:

For 5E9(2) and earlier, Metallic Test Bus 0 must be assigned to Service Group 0.

If a METALLIC TEST BUS 0 value is assigned for Service Group 0, then another EQISAP form must be defined with the same SWITCHING MODULE, (R)ISLU TYPE and (R)ISLU NUMBER entered on this form for a METALLIC TEST BUS 1 value that is assigned to the corresponding pack in Service Group 1. If MTB0 is entered, then MTB1 must not be input on the same form. Valid Circuit Pack Numbers associated with MTB0 numeric are 00 and 11.

Copyright © 2006 Lucent Technologies

If CIRCUIT PACK NUMBERs 00 and 11 are assigned to the same SWITCHING MODULE, (R)ISLU TYPE and (R)ISLU NUMBER, then the METALLIC TEST BUS 0 value must be the same on the two EQISAP forms.

This number consists of an 9-digit number as indicated below:

Valid MTS 0 Entries

Equipment		Format	Valid Entries
Switching Module	SM	XXX	1-192
Metallic Service Unit	MSU	X	0-1
Service Group	SVG	X	0
Board	BRD	XX	00-15 (Regular MSU)
			00-31 (Modular MSU)
BUS	BUS	XX	00-14

This field is valid only for Circuit Pack Type of "ISMAN". MTBs greater than 3000 ohms are not valid on RISLUs.

2.10 METALLIC TEST BUS 1

Description: For 5E9(2) and earlier, Metallic Test Bus 1 must be assigned to Service Group 1.

If a METALLIC TEST BUS 1 value is assigned for Service Group 1, then another EQISAP form must be defined with the same SWITCHING MODULE, (R)ISLU TYPE and (R)ISLU NUMBER entered on this form for a METALLIC TEST BUS 0 value that is assigned to the corresponding pack in Service Group 0. If MTB1 is entered, then MTB0 numeric must not be input on the same form. Valid Circuit Pack Numbers associated with MTB1 are 10 and 01.

If CIRCUIT PACK NUMBERs 10 and 01 are assigned to the same SWITCHING MODULE, (R)ISLU TYPE and (R)ISLU NUMBER, then the METALLIC TEST BUS 1 value must be the same on the two EQISAP forms.

This number consists of an 9-digit number as indicated below:

Valid MTS 1 Entries

Equipment		Format	Valid Entries
Switching Module	SM	XXX	1-192
Metallic Service Unit	MSU	X	0-1
Service Group	SVG	X	1
Board	BRD	XX	00-15 (Regular MSU)
			00-31 (Modular MSU)
BUS	BUS	XX	00-14

This field is valid only for Circuit Pack Type of "ISMAN". MTBs greater than 3000 ohms are not valid on RISLUs.

```
eqisap                          5ESS Switch            _
(5824)                    OFFICE DATA ADMINISTRATION
                   INTEGRATED SERVICES ANALOG PACK EQUIPAGE

* 1. SWITCHING MODULE            001
* 2. (R)ISLU TYPE                ISLU
* 3. (R)ISLU NUMBER              0
```

```
* 4. CIRCUIT PACK TYPE           ISMAN
* 5. CIRCUIT PACK NUMBER         00

  6. EQUIPMENT STATUS            O
  7. CLI                         00000000
  8. METALLIC TEST BUS 0         001000014
  9. METALLIC TEST BUS 1         _________
```

Figure 1 SAMPLE EQISAP FORM 5E5 AND LATER SOFTWARE RELEASES

Copyright © 2006 Lucent Technologies

SEC. 25: 5750 RECORD
METALLIC SERVICE UNIT EQUIPMENT RECORD
METALLIC SERVICE UNIT EQUIPAGE FORM (EQMSU)
METALLIC SERVICE UNIT PACK EQUIPAGE FORM (EQMSP)
MODULAR METALLIC SERVICE UNIT PACK EQUIPAGE FORM (EQMMSP)
METALLIC TEST INTERCONNECTION BUS EQUIPAGE FORM (EQMTIB)

1. GENERAL

The 5750 Record is used to define MSU (Metallic Service Unit) assignments from the EQMSU and the EQMTIB (5E10 and later), EQMSP or EQMMSP forms.

All MSUs in an office connect to an MTIB (Metallic Test Interconnection Bus). The MTIB provides the ability to interconnect MSUs and MSUSGs (Metallic Service Unit Service Groups) when more than one MSUSG must be used in a metallic connection. To provide this capability, the switch processing requires data defining the sequence in which the MSUs are connected to the MTIBs. Data describing this sequence is entered on the EQMSU form. For 5E9(2) and later, all MSU functions are provided by the Modular MSU.

For 5E14 and later, The FLEX DCTU CON field was added to provide additional MTIB paths to enhance availability of test setups in the MMSU. See Division 2, Section 7AL.

1.1 Recent Change View

The corresponding Recent Change View for the EQMSU and EQMTIB forms is 19.7. The corresponding Recent Change View for the EQMSP and EQMMSP forms is 20.7.

2. FORM ENTRIES - EQMSU

2.1 BASE AND CONTROL, ESS UNIT

Enter the Base and Control number and the office name on each record.

2.2 *INTERFACE MODULE

Description: Enter the Switching Module Number.
Valid Entries:
1 - 48: for CM1 (Communications Module 1)
1 - 192: for CM2 (Communications Module 2)

2.3 *METALLIC SERVICE UNIT

Description: Enter the Metallic Service Unit Number.
Valid Entries: 0 - 1

2.4 *SERVICE GROUP

Description: Enter the Service Group Number.
Valid Entries: 0 and 1

2.5 MSU TYPE

Copyright © 2006 Lucent Technologies

Description: Enter the Metallic Service Unit Type.

Required Field.

Valid MSU TYPE Entries	
Entry	**Description**
R	Regular.
M	Modular. Note: For 5E9(2) and later, all MSU functions are provided by the Modular MSU.

2.6 EQUIPMENT STATUS

Description: Enter the status of the equipment. For new offices and units destined for factory testing, operational is the only allowed value. During offline ODA database retrofits, the other values are valid.

Required Field.
Default: O
Valid Entries:

Valid EQUIPMENT STATUS Entries	
Entry	**Description**
G	Growth.
O	Operational.
U	Unequipped.

2.7 INTF UNIT

Description: Enter the Interface Unit number. This field was added to support the 5E15 Optically Extended Control and Data Unit feature. See Division 2, Section 9V.

Required Field.
Valid Entries: 0 -8

Data Rules:

When INTF UNIT is greater than 0, it must be defined on the EQXCDU form for the same Switching Module. In addition, the EQSTAT value on the EQCI must not exceed the MOD CTL SG0/1 EQSTAT on the EQXCDU form (5853 Record). (EQSTAT of "O" is greater than EQSTAT of "G", and EQSTAT of "G" is greater than EQSTAT of "U".)

The SM/INTF UNIT/DATA GRP combinations entered on this form must be defined on a EQDI form or a EQXCDU form. Also, the EQSTAT on the matching EQDI or EQXCDU form must be greater than or equal to the equipment status value ("O", "G", or "U") on this form (e.g., "O" is greater than "G" which is greater than "U"). Note also that when INTF UNIT is greater than 0 and DATA GRP is 0, these Data Groups are defined on the EQXCDU form.

CONTROL GROUP numbers assigned on the following forms must be defined as CI on an EQCI form: EQDCTU (5751 Record), EQDCLU (5810 Record), EQDS (5740 Record), EQDSC3 (5852 Record), EQDUP (5730-2), EQGDSC3 (5860 Record), EQIDCU (5846 Record), EQISLU (5731 Record), EQISTF (5823 Record), EQLU (5710 Record), EQPSU (5741 Record), EQRA (5821 Record), EQTU (5720 Record), EQFIU (5753 Record), EQMSU (5750 Record), EQRCLK (5723 Record). Furthermore, the EQSTAT on the matching EQCI form must be greater than or equal to the equipment status value on the equipment form (i.e., "O"' is greater than "G" which is greater than "U").

For 5E16(2) and later, when INTF UNIT is 0, EQUIPMENT BAY must be 000 - 014, 100 - 104, or 200 - 208.

Copyright © 2006 Lucent Technologies

2.8 CONTROL GROUP

Description: Enter the Control Group Number.

Required Field.
Valid Entries:

Valid CONTROL GROUP Entries, 5E9(2) and later	
Entry	**Definition**
0 - 1	SM.
0 - 3	SM-2000.

Data Rules:

CONTROL GROUP numbers assigned on the following forms must be defined as CI on an EQCI form: EQDCTU (5751 Record), EQDCLU (5810 Record), EQDS (5740 Record), EQDSC3 (5852 Record), EQDUP (5730-2), EQGDSC3 (5860 Record), EQIDCU (5846 Record), EQISLU (5731 Record), EQISTF (5823 Record), EQLU (5710 Record), EQPSU (5741 Record), EQRA (5821 Record), EQTU (5720 Record), EQFIU (5753 Record), EQMSU (5750 Record), EQRCLK (5723 Record). Furthermore, the EQSTAT on the matching EQCI form must be greater than or equal to the equipment status value on the equipment form (i.e., "O"' is greater than "G" which is greater than "U").

2.9 CONTROL PORT

Description: Enter the Control Port Number.

Required Field.
Valid Entries: 0 - 22.

Data Rules:

The Control Group Number and Control Port Number combination must be unique for the two Service Groups.

Control Port assignments cannot be duplicated on the following forms: EQDCTU (5751 Record), EQDCLU (5810 Record), EQDS (5740 Record), EQDSC3 (5852 Record), EQDUP (5730-2), EQGDSC3 (5860 Record), EQIDCU (5846 Record), EQISLU (5731 Record), EQRISLU (5732 Record), EQISTF (5823 Record), EQLU (5710 Record), EQPSU (5741 Record), EQRA (5821 Record), EQTU (5720 Record), EQFIU (5753 Record), EQMSU (5750 Record), EQRCLK (5723 Record).

For 5E12 and later, for the EQAIU, EQIDCU, EQISLU, EQRISLU and EQPSU forms, two control ports are assigned based on the Control Port entered on the form. The first is the Control Port entered on the form, the second Control Port is one plus the Control Port entered on the form. Non-SM-2000 class processors reserve Control Group/Control Port 0/0 and 0/1 for the Local Digital Service unit. No other unit may specify Control Group/Control Port 0/0 or 0/1 for non-SM-2000 class processors. Non-SM-2000 class processors reserve Control Group/Control Port 0/0 and 0/1 for the Local Digital Service unit. No other unit may specify Control Group/Control Port 0/0 or 0/1 for non-SM-2000 class processors.

2.10 EQUIPMENT BAY

Description: Enter the Equipment Location Bay Number.

Required Field.
Valid Entries:
5E9(2) and later: 0 - 208

Copyright © 2006 Lucent Technologies

Valid EQUIPMENT BAY Entries, 5E9(2) - 5E16(1)	
Entry	**Definition**
0 - 4	Switching Module (non-SM-2000).
0 - 14	SM-2000; SM Cabinent aisle.
100 - 104	SM-2000; Back panel; wiring position.
200 - 208	SM-2000; Front panel; door position.

Valid EQUIPMENT BAY Entries for 5E16(2) and later			
Entry			**Type**
000 - 004			SM
000 - 014,	100 - 104,	200 - 208,	SM-2000
A00 - A14,	B00 - B04,	C00 - C08,	
D00 - D14,	E00 - E04,	F00 - F08,	
G00 - G14,	H00 - H04,	J00 - J08,	
K00 - K14,	L00 - L04,	M00 - M08,	
N00 - N14,	P00 - P04,	Q00 - Q08,	
R00 - R14,	S00 - S04,	T00 - T08,	
U00 - U14,	V00 - V04,	W00 - W08,	
X00 - X14,	Y00 - Y04,	Z00 - Z08	

Data Rules:

If 1 is entered, UNIT TYPE on the EQIM form (5700 Record) must be "MCTU3", "SMPU3", "SMPU4", or an SM-2000 class processor.

2.11 EQUIPMENT VERTICAL

Description: Enter the Vertical Equipment Location that specifies the bottom of the unit.

Required Field.
Valid Entries: 0 - 84

5E9(2) and later:
7 foot cabinets - 22, 30, 39, 48, 56, 65, 74
6 foot cabinets - 7, 15, 24, 32, 41, 49, 58

2.12 EQUIPMENT AISLE

Description: Enter the Equipment Location Aisle Number. This entry consists of a floor and aisle number. The first and second digits, from the left, are the floor number. Valid floor numbers are 00-99. The third and fourth digits, from the left, are the aisle number. Valid aisle numbers are 00-99. It is recommended that floor 00 be used for equipment located in the basement, per floor plan designation.

Required Field.
Valid Entries: 0000 - 9999

2.13 CSU

Description: Is the MSU located on a CSU (Combined Services Unit)? For more information on the Combined Services Unit feature, see Division 2, Section 7F.

Software Release: 5E10 and later
Required Field.

Copyright © 2006 Lucent Technologies

Default: N
Valid Entries: Y, N

Data Rules:

When CSU is "Y", SERVICE GROUP must be 0.

For an SM with a CSU, all equipment assignments for the CSU on that SM must specify the same combination of AISLE, BAY, VERT POS values. Therefore, the EQDU, EQGDSC3, EQMSU, or EQRA forms which have CSU set to "Y" must have equipment assignments that specify one location for the same CSU on a particular SM.

When an EQMSU form is entered with CSU set to "Y", no other EQMSU form may be entered on the same SM.

When an EQMSU form is entered with CSU set to "Y", the corresponding EQMMSP form with matching INTERFACE MODULE, METALLIC SERVICE UNIT and SERVICE GROUP values

- must not have any entries for GROWTH SHELF 1, GROWTH SHELF 2 or GROWTH SHELF 3.
- must not have any entries in the PACK EQUIPMENT LIST for SHELF POSITIONS 8 - 31.
- must not have any entries in the PACK EQUIPMENT LIST with SHELF TYPE values other than "MACC", "SCAN", "DIST" or "GDXC" for SHELF POSITIONS 0 - 7.
- must have an entry for MTIB BASIC SHELF.

Any SERVICE GROUP assigned within an INTERFACE MODULE on an EQMSU form which has CSU set to "N" must be assigned in pairs and with the same EQUIPMENT VERTICAL and EQUIPMENT BAY.

2.14 FLEX DCTU CON

Description: Is the Flexible Directly Connected Test Unit Connection to MSU enabled? See Division 2, Section 7AL.

Software Release: 5E14 and later
Required Field.
Default: N
Valid Entries: Y, N

Valid FLEX DCTU CON Entries

Entry	Definition
Y	Many to 1 MTB/PMU port connection.
N	1 to 1 MTB/PMU port connection.

Data Rules:

When "Y" is entered,

- for all EQPMU MTB AO - MTB D0 assignments for a particular MSU which has a MTB that resides on Shelf 0, the same pack position on shelves 1, 2 and 3 must either be equipped with a "MACC" pack or must be vacant.

  NOTE: The exception to the above data rule occurs in cases where the shelf is a non-metallic

shelf (i.e., scan and distribute packs only). In such cases, the switch will allow scan or distribute packs in the slots reserved for the MACC pack; no cross check error will be encountered.

- all EQPMU MTB assignments to MSU's with Flexible DCTU Connectivity must be to MACC packs on shelf 0 only (pack numbers 0 - 7)

2.15 MTIB POSITION

Description: This field identifies the start, intermediate, and end position of the MTIB.

Valid MTIB POSITION Entries

Entry	Description
S or START	"START" is used if this Service Group equals 1, this MSU is not located on an RSM, and this Service Group is equipped with at least one MTIB pack.
E or END	"END" is used if this Service Group equals 0, this MSU is not located on an RSM, and this Service Group is equipped with at least one MTIB pack.

Data Rules:

Leave blank if this Service Group (0 or 1) either occupies an intermediate point on the MTIB, is located on an RSM, or does not have at least one MTIB pack equipped (SCAN and/or Distribute Packs only).

When Service Group 0 is the end of the MTIB, enter END in the Position field. Otherwise leave the Position field blank. Position cannot be START for Service Group 0.

When the Service Group 1 is the start of the MTIB, enter START in the Position field. Otherwise leave the Position field blank. Position cannot be END for Service Group 1.

2.16 ADJACENT MTIB IM

Description: If this MSU is an intermediate point in the MTIB, indicate the adjacent SM number. A Service Group 1 is cabled from a preceding adjacent SM and a Service Group 0 is cabled to a succeeding adjacent SM.

Software Release: 5E9(2) and earlier.
Valid Entries:
1 - 48: For CM1 (Communications Module 1)
1 - 192: For CM2 (Communications Module 2)

Data Rules:

Leave blank for any one of the following conditions:

- If this Service Group is the start or end of the MTIB.
- If this MSU is located on an RSM.
- If this MSU is not equipped with an MTIB pack (SCAN and/or Distribute Packs only).

Refer to Figures 2 and 3 for examples.

2.17 ADJACENT MTIB MSU

Copyright © 2006 Lucent Technologies

Description: If this MSU is an intermediate point in the MTIB, indicate the adjacent MSU number. A Service Group 1 is cabled from a preceding adjacent MSU and a Service Group 0 is cabled to a succeeding adjacent MSU.

Software Release: 5E9(2) and earlier.
Valid Entries: 0 and 1

Data Rules:

Leave blank for any one of the following conditions:

- If this Service Group is the start or end of the MTIB.
- If this MSU is located on an RSM.
- If this MSU is not equipped with an MTIB Pack (SCAN and/or Distribute Packs only).

Refer to Figures 2 and 3 for examples.

2.18 MSU COMMON CIRCUIT CLI

Description: Enter the MSU Common Circuit Change Level Indicator. This circuit is provided as part of the basic unit per Service Group.
Valid Entries: 0 to 7FFFFFFF, hexadecimal

For a complete listing of valid CLI values, J-Drawing and list combinations, see Division 8, Section 1.

3. FORM ENTRIES - EQMSP

For 5E9(1) and earlier, when MSU TYPE is "R" on the EQMSU form, for a given Service Group, the following field information, for each equipped pack, is entered on the EQMSP form. The INTERFACE MODULE, MSU and SG key fields on this form must be the same as the associated fields on the EQSU form.

3.1 MTIB PACK EQSTATUS

Description: Enter the equipment status for the MTIB pack. For new offices and units destined for factory testing, operational is the only allowed value. During offline ODA database retrofits, the other values are valid. If MTIB pack is not equipped, leave blank.

Valid MTIB PACK EQSTATUS Entries

Entry	Description
G	Growth.
O	Operational.
U	Unequipped.

3.2 MTIB PACK CLI

Description: Enter the MTIB PACK CLI. If MTIB pack is not equipped, leave blank.
Valid Entries: 0 to 7FFFFFFF, hexadecimal

For a complete listing of valid CLI values, J-Drawing and list combinations, see Division 8, Section 1.

PACK EQUIPMENT LIST

Copyright © 2006 Lucent Technologies

The following fields (Section 3.3 - Section 3.6) define the circuit packs associated with the MSU.

3.3 POS

Description: Enter the Metallic Service Unit Pack Position Number.
Valid Entries: 0 - 15

3.4 TYPE

Description: Enter the type of MSU Pack for each position.

Valid TYPE Entries

Entry	Description
SCAN	Scan Point Circuit Pack.
DIST	Distribute Point Circuit Pack.
ALIT	Automatic Line Insulation Test Pack.
GDXC	Gated Diode Crosspoint Compensator Pack.
MACC	Metallic Access Circuit Pack.
DFTC	Distributing Frame Test Access Circuit.

Data Rules:

To minimize metallic path cabling, MACC packs should be equipped in the first three positions of each MMSU shelf.

If a GDXC pack is equipped in Shelf 0-3, an ALIT pack must be equipped on the same MSU/SG, unless the ALIT is exclusively for SLC-96.

A maximum of three MACC packs may be equipped per shelf. If a GDXC or ALIT pack is equipped in Shelf 0-3, a MACC pack on the same MSU/SG must also be equipped.

If Shelf 0, 1, 2 or 3 is equipped with at least one MACC, ALIT, DFTC, GDXC or SLIM pack, the MTIB pack must also be provided. If the shelf is unequipped or equipped with only SCAN and/or DIST packs, the MTIB pack is not required.

If a "MACC" pack is equipped and resides upon an ORM, TRM, or RSM, the remote modules must also be Common Resource Modules (denoted by MASTER MODULE on a corresponding EQSITE form).

3.5 EQST

Description: Enter the status of the equipment for each pack position. For new offices and units destined for factory testing, operational is the only allowed value. During offline ODA database retrofits, the other values are valid.
Default: O
Valid Entries:

Valid EQST Entries

Entry	Description
G	Growth.
O	Operational.
U	Unequipped.

3.6 CLI

Description: Enter the Change Level Indicator for the pack position. This circuit is provided as part of the basic unit per Service Group.

Copyright © 2006 Lucent Technologies

Valid Entries: 0 - 7FFFFFFF, hexadecimal

For a complete listing of valid CLI values, J-Drawing and list combinations, see Division 8, Section 1.

For 5E3 and later, if the MSU Pack Type is MACC and EQST is "O", then the Modular MSU has Metallic Access capability and is equipped with an MA pack, MTIBAX (MTIB Access) pack and protocol circuit.

4. FORM ENTRIES - EQMMSP

When MSU type is "M" on the EQMSU form, for a given Service Group, the following field information, for each equipped pack, is entered on the EQMMSP form. The INTERFACE MODULE, MSU and SG key fields on this form must be identical to the same key fields on the EQSU form. Note that each EQMMSP form must have a corresponding EQMSU form.

MTIB SHELVES

There are four shelvesSection 4.1 - Section 4.2 consisting of a Basic Shelf and three Growth shelves.

The following is the Shelf and Pack Position Relationship:

Pack Equipment Relationship

Shelf	Shelf Number	Pack Position
Basic Shelf	0	00-07
Growth Shelf 1	1	08-15
Growth Shelf 2	2	16-23
Growth Shelf 3	3	24-31

A status and CLI value is required for each shelf.

4.1 EQST

Description: If MTIB (BASIC SHELF), MTIB (GROWTH SHELF 1), MTIB (GROWTH SHELF 2), or MTIB (GROWTH SHELF 3) is equipped with an MTIB pack, enter its equipment status.

For new offices and units destined for factory testing, operational is the only allowed value. During offline ODA database retrofits, the other values are valid.
Default: O
Valid Entries:

Valid EQST Entries

Entries	Descriptions
G	Growth.
O	Operational.
U	Unequipped.

4.2 CLI

Description: If MTIB (BASIC SHELF), MTIB (GROWTH SHELF 1), MTIB (GROWTH SHELF 2), or MTIB (GROWTH SHELF 3) is equipped with an MTIB pack and its EQST is known, enter the CLI value.
Valid Entries: 0 - 7FFFFFFF, hexadecimal

For a complete listing of valid CLI values, J-Drawing and list combinations, see Division 8, Section 1.

PACK EQUIPMENT LIST

The following fields (Section 4.3 - Section 4.5) define the Pack Equipment List for Modular MSU for the

Copyright © 2006 Lucent Technologies

combined pack entries on the EQMMSP form for MTIB (BASIC SHELF), MTIB (GROWTH SHELF 1), MTIB (GROWTH SHELF 2), or MTIB (GROWTH SHELF 3). If any of these are equipped, enter the TYPE, EQST, and CLI values for each.

4.3 TYPE

Description: Enter the type of MSU Pack for each position.

Valid TYPE Entries

Entry	Description
[AL]IT	Automatic Line Insulation Test Pack.
[DF]TC	Distributing Frame Test Access Circuit.
[DI]ST	Distribute Point Circuit Pack.
[GD]XC	Gated Diode Crosspoint Compensator Pack.
[MA]CC	Metallic Access Circuit Pack.
[SC]AN	Scan Point Circuit Pack.
[SL]IM	Software Release: 5E10 and later Subscriber Line and Instrument Measurement Pack.

Data Rules:

If TYPE is "SLIM":

- SLIM ROUTE INDEX must be entered on the IMINFO form.
- each pack entered must have 3 LTP assignments associated with a TRKCLS set to "LTPSLIM" on the TKGRP form. For these LTPs, the SM specified in the LTP on the TRUNK form must equal the SM on the EQMMSP form.
- and if, Basic Shelf and/or Growth Shelf 1, 2, or 3 is equipped, a MACC pack must also be equipped on the same MSU/SG.

When MSUs are mounted on either a Local SM or a Host SM and also have one or more MACC packs assigned via the corresponding EQMMSP form (PACK TYPE set to "MACC"), then MSUs require a corresponding EQMTIB form entered.

4.4 EQST

Description: Enter the status of the equipment for each pack position. For new offices and units destined for factory testing, operational is the only allowed value. During offline ODA database retrofits, the other values are valid.
Default: O
Valid Entries:

Valid EQST Entries

Entry	Description
G	Growth.
O	Operational.
U	Unequipped.

4.5 CLI

Description: Enter the Change Level Indicator for the pack position. This circuit is provided as part of the basic unit per Service Group.
Valid Entries: 0 - 7FFFFFFF, hexadecimal

Copyright © 2006 Lucent Technologies

For a complete listing of valid CLI values, J-Drawing and list combinations, see Division 8, Section 1.

5. FORM ENTRIES - EQMTIB

5.1 *SM

Description: Enter the Switching Module Number.

Software Release: 5E10 and later.
Valid Entries: 1 - 192

Data Rules:

Each EQMTIB form must have at least one corresponding EQMSU form with matching SM and MSU values. In addition, EQMTIB forms must be associated with EQIM forms where SM USAGE is "HIM " or "IM" . All EQMTIB forms must be associated with Switching Modules that are not remote.

5.2 *MSU

Description: Enter the Metallic Service Unit
Valid Entries: 1 - 0

5.3 SHELF

Description: Enter the MSU type. This is a no change field.
Default: 0

5.4 EQSTST

Description: Enter the equipment status. This is a display only field.

5.5 CLI

Description: Enter the Change Level Indicator. This is a display only field.

5.6 PREV SM

Description: Enter the previous MTIB interface module.
Valid Entries: 1 - 192

Data Rules:

When PREV SM is "SM", then PREV MSU must not equal "MSU".

When PREV SM equals NEXT SM, then PREV MSU must not equal NEXT MSU.

If and only if there is one EQMTIB form for the office, then the following fields must not be entered:

- MTIB CONNECTION PREV SM
- MTIB CONNECTION PREV MSU
- MTIB CONNECTION NEXT SM

Copyright © 2006 Lucent Technologies

- MTIB CONNECTION NEXT MSU

When there is only one EQMITB form for the office, the CSU field on the corresponding EQMSU form must be "N".(This represents an MTIB access network where the start is on service group 1 of this MSU and the end is on service group 0 of the same MSU).

For each EQMTIB form that specifies a NEXT SM, NEXT MSU combination, there must be a second EQMTIB form which has key fields SM and MSU equal to the NEXT SM and NEXT MSU of the first form and with PREV SM and PREV MSU equal to the SM and MSU values of the first form.

Example: If for one EQMTIB form SM/MSU is 001/0 and NEXT SM/MSU is 002/1, then there must be a second EQMTIB form where SM/MSU is 002/1 and PREV SM/MSU is 001/0. (See Figure 4).

The entries in PREV SM/MSU or NEXT SM/MSU must not be duplicated on more than one EQMTIB form.

There may be only one MTIB access network for a given office. Therefore, all EQMTIB form tuples should be linked together to form a single contiguous chain via the MTIB NEXT SM/MSU and MTIB PREV SM/MSU assignments. Breaks in the chain are not allowed. One and only one of the EQMTIB forms must have MTIB PREV SM/MSU blank (this is the start of the MTIB metallic access network). One and only one of the EQMTIB forms must have MTIB NEXT SM/MSU blank (this is the end of the MTIB metallic access network).

If the PREV SM/PREV MSU connection is entered, the NEXT SM/NEXT MSU connection must not be entered and vice versa.

5.7 PREV MSU

Description: Enter the previous MTIB metallic service unit.
Valid Entries: 0 - 1

Data Rules:

The PREV MSU and the NEXT MSU cannot be duplicated for the same SM.

5.8 NEXT SM

Description: Enter the next MTIB interface module.
Valid Entries: 1 - 192

Data Rules:

When NEXT SM is "SM", then NEXT MSU must not equal "MSU".

5.9 NEXT MSU

Description: Enter the next MTIB metallic service unit.
Valid Entries: 0 - 1

Data Rules:

The NEXT MSU and the PREV MSU cannot be duplicated for the same SM.

Copyright © 2006 Lucent Technologies

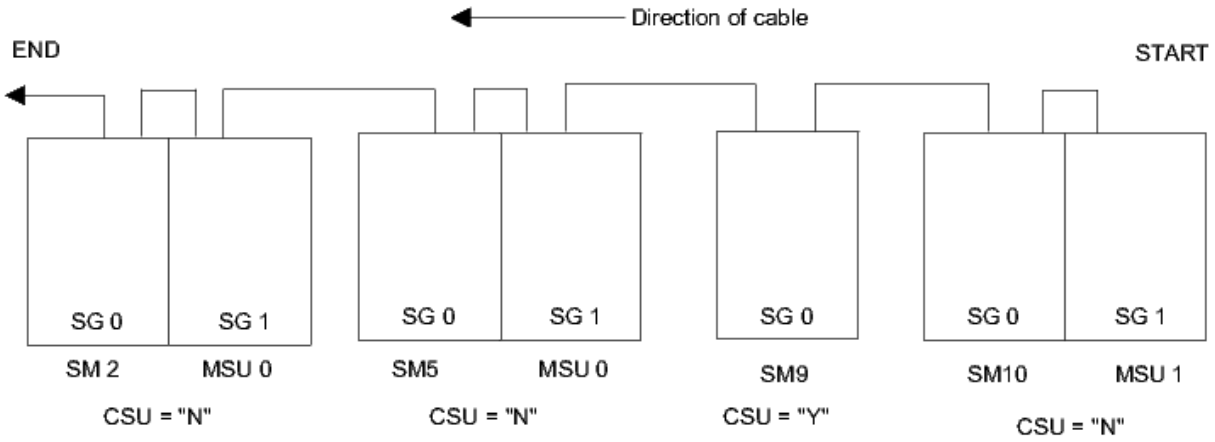

EQMTIB FIELD	SM 2 MSU 0	SM 5 MSU 0	SM 9 MSU 0	SM 10 MSU 1
PREV SM	5	9	10	-
PREV MSU	0	0	1	-
NEXT SM	-	2	5	9
NEXT MSU	-	0	0	0

Figure 1 MULTIPLE METALLIC SERVICE UNITS IN MULTI-MODULE OFFICE 5E10 AND LATER SOFTWARE RELEASES

```
eqmsu                          5ESS Switch            _
5750                     OFFICE DATA ADMINISTRATION
                       METALLIC SERVICE UNIT EQUIPAGE

* 1.  INTERFACE MODULE         ___      13.  ADJACENT MTIB IM         ___
* 2.  METALLIC SERVICE UNIT    _        14.  ADJACENT MTIB MSU        _
* 3.  SERVICE GROUP            _        15.  MSU COMMON CIRCUIT CLI   ________
  4.  MSU TYPE                 _
  5.  EQUIPMENT STATUS         O
  6.  CONTROL GROUP            _
  7.  CONTROL PORT             __
  8.  EQUIPMENT BAY            ___
  9.  EQUIPMENT VERTICAL       __
 10.  EQUIPMENT AISLE          ____
 11.  CSU                      N
 12.  MTIB POSITION            _____
```

Figure 2 SAMPLE EQMSU FORM 5E13 AND EARLIER SOFTWARE RELEASES

```
eqmsu                              5ESS Switch            _
                            OFFICE DATA ADMINISTRATION
(5750)                    METALLIC SERVICE UNIT EQUIPAGE

 *1. INTERFACE MODULE      ___     #13. MSU COMMON CIRCUIT CLI ________
 *2. METALLIC SERVICE UNIT _
 *3. SERVICE GROUP         _
 #4. MSU TYPE              _
  5. EQUIPMENT STATUS      O
 #6. CONTROL GROUP         _
 #7. CONTROL PORT          __
 #8. EQUIPMENT BAY         ___
 #9. EQUIPMENT VERTICAL    __
#10. EQUIPMENT AISLE       ____
 11. CSU                   N
 12. FLEX DCTU CON         N
```

Figure 3 SAMPLE EQMSU FORM 5E14 SOFTWARE RELEASE

```
eqmsu                              5ESS Switch            _
                            OFFICE DATA ADMINISTRATION
(5750)                    METALLIC SERVICE UNIT EQUIPAGE

 *1. INTERFACE MODULE      ___      13. FLEX DCTU CON          N
 *2. METALLIC SERVICE UNIT _       #14. MSU COMMON CIRCUIT CLI ________
 *3. SERVICE GROUP         _
 #4. MSU TYPE              _
  5. EQUIPMENT STATUS      O
  6. INTF UNIT             0
 #7. CONTROL GROUP         _
 #8. CONTROL PORT          __
 #9. EQUIPMENT BAY         ___
#10. EQUIPMENT VERTICAL    __
#11. EQUIPMENT AISLE       ____
 12. CSU                   N
```

Figure 4 SAMPLE EQMSU FORM 5E15 AND LATER SOFTWARE RELEASES

```
eqmsp                              5ESS Switch            _
```

```
(5750)                    OFFICE DATA ADMINISTRATION
                    METALLIC SERVICE UNIT PACK EQUIPAGE


* 1. INTERFACE MODULE        001       4. MTIB PACK EQSTATUS    O
* 2. METALLIC SERVICE UNIT   0         5. MTIB PACK CLI         00000000
* 3. SERVICE GROUP           0

                           6. PACK EQUIPMENT LIST

 row   POS     TYPE    EQST    CLI      row    POS     TYPE    EQST    CLI
 01    00      SCAN     O    00000000   09     08      MACC     O    00000002
 02    01      SCAN     O    00000000   10     09      MACC     U    00000031
 03    02      SCAN     U    00000000   11     10      GDXC     O    00000002
 04    03      DIST     O    00000000   12     11      GDXC     O    00000002
 05    04      DIST     O    00000000   13     12      GDXC     O    00000002
 06    05      DIST     U    00000000   14     __      ____     _    ________
 07    06      ALIT     O    00000002   15     __      ____     _    ________
 08    07      GDXC     U    00000007   16     __      ____     _    ________
```

Figure 5 SAMPLE EQMSP FORM 5E5 AND LATER SOFTWARE RELEASES

```
eqmmsp                            5ESS Switch
(5750)                    OFFICE DATA ADMINISTRATION
Screen 1 of 2    MODULAR METALLIC SERVICE UNIT PACK EQUIPAGE

                                                          EQST      CLI
* 1. INTERFACE MODULE  ___        MTIB (BASIC SHELF)      4. _   5. ________
* 2. MODULAR MSU       _          MTIB (GROWTH SHELF 1)   6. _   7. ________
* 3. SERVICE GROUP     _          MTIB (GROWTH SHELF 2)   8. _   9. ________
                                  MTIB (GROWTH SHELF 3)  10. _  11. ________

                           12. PACK EQUIPMENT LIST
             BASIC SHELF                             GROWTH SHELF 1
 row   POS     TYPE    EQST    CLI       row    POS     TYPE    EQST    CLI
 01    00      ____     _    ________    09     08      ____     _    ________
 02    01      ____     _    ________    10     09      ____     _    ________
 03    02      ____     _    ________    11     10      ____     _    ________
 04    03      ____     _    ________    12     11      ____     _    ________
 05    04      ____     _    ________    13     12      ____     _    ________
 06    05      ____     _    ________    14     13      ____     _    ________
 07    06      ____     _    ________    15     14      ____     _    ________
 08    07      ____     _    ________    16     15      ____     _    ________
```

```
eqmmsp                            5ESS Switch
(5750)                    OFFICE DATA ADMINISTRATION
Screen 2 of 2    MODULAR METALLIC SERVICE UNIT PACK EQUIPAGE
                           12. PACK EQUIPMENT LIST
```

```
                GROWTH SHELF 2                                GROWTH SHELF 3
 row   POS     TYPE    EQST    CLI        row   POS     TYPE   EQST     CLI
 17    16      _____    _    _________     25    24      _____   _     _________
 18    17      _____    _    _________     26    25      _____   _     _________
 19    18      _____    _    _________     27    26      _____   _     _________
 20    19      _____    _    _________     28    27      _____   _     _________
 21    20      _____    _    _________     29    28      _____   _     _________
 22    21      _____    _    _________     30    29      _____   _     _________
 23    22      _____    _    _________     31    30      _____   _     _________
 24    23      _____    _    _________     32    31      _____   _     _________
```

Figure 6 SAMPLE EQMMSP FORM 5E5 AND LATER SOFTWARE RELEASES

```
eqmtib                              5ESS Switch            _
                            OFFICE DATA ADMINISTRATION
(5750)                 METALLIC TEST INTERCONNECTION EQUIPAGE

*1. SM     ___
*2. MSU    _
    SHELF  0
    EQSTAT _
    CLI    _________

MTIB CONNECTIONS
 6. PREV SM  ___
 7. PREV MSU _

 8. NEXT SM  ___
 9. NEXT MSU _
```

Figure 7 SAMPLE EQMTIB FORM 5E10 AND LATER SOFTWARE RELEASES

Copyright © 2006 Lucent Technologies

SEC. 26: 5751 RECORD
DIRECTLY CONNECTED TEST UNIT FORM - EQDCTU

1. GENERAL

The DCTU (Directly Connected Test Unit) provides metallic access testing capabilities to users via a CRT (Cathode Ray Tube) at the TLWS (Trunk and Line Work Station). The DCTU is available with 5E1 and later Software Releases.

The DCTU performs both DC (Direct Current) and sub-audio measurement capabilities for the integrated testing of loops, trunks and special service facilities, office related maintenance testing capability measurements of Direct Current voltages, resistance and capacitance of facilities that is controlled by the SM (Switching Module).

A DCTU may be configured with a maximum of three PMUs (Precision Measurement Units). Each PMU has four ports. A metallic path is established from a port through a metallic access pack in a Metallic Service Unit to the line or trunk to be tested. The PMU assignments are entered on the 5752-1/2 Record, Precision Measurement Unit Form (EQPMU).

If the 5751 Record is supplied, there must be a Route Index defined on the IMINFO form (5510 Record).

For every DCTU circuit (as defined in the 5751 Record) defined in a SM, there must be a trunk defined on the TRUNK form (5202 Record) with a Logical Test Port defined on the SM containing the DCTU, and with a Trunk Class of "LTPDCTU" on the TKGRP form (5202 Record).

1.1 Recent Change View

The Recent Change View for this form is 19.9.

2. FORM AND RECORD ENTRIES

2.1 *SWITCHING MODULE

Description: Enter the SM in which the Directly Connected Test Unit is mounted.
Valid Entries: 1 - 192

2.2 DCTU STATUS

Description: Enter the equipage status of the DCTU. For new offices and units destined for factory testing, Operational is the only allowed value. During offline ODA database retrofits, the other values are valid.
Default: O
Valid Entries:

Valid DCTU STATUS Entries

Entry	Definition
U	Unequipped.
G	Growth.
O	Operational.

2.3 DCTU CLI

Descrtiption: Enter the DCTU Change Level Indicator.

For a complete listing of valid CLI values, J-Drawing and list combinations, see Division 8, Section 1.

Copyright © 2006 Lucent Technologies

2.4 INTF UNIT

Description: Enter the Interface Unit number. This field was added to support the 5E15 Optically Extended Control and Data Unit feature. See Division 2, Section 9V.

Required Field.
Valid Entries: 0 - 8

Data Rules:

When INTF UNIT is greater than 0, it must be defined on the EQXCDU form for the same Switching Module. In addition, the EQSTAT value on the EQCI must not exceed the MOD CTL SG0/1 EQSTAT on the EQXCDU form (5853 Record). (EQSTAT of "O" is greater than EQSTAT of "G", and EQSTAT of "G" is greater than EQSTAT of "U".)

The SM/INTF UNIT/DATA GRP combinations entered on this form must be defined on a EQDI form or a EQXCDU form. Also, the EQSTAT on the matching EQDI or EQXCDU form must be greater than or equal to the equipment status value ("O", "G", or "U") on this form (e.g., "O" is greater than "G" which is greater than "U"). Note also that when INTF UNIT is greater than 0 and DATA GRP is 0, these Data Groups are defined on the EQXCDU form.

For 5E16(2) and later, when INTF UNIT is 0, EQUIPMENT BAY must be 000 - 014, 100 - 104, or 200 - 208.

2.5 CONTROL GROUP

Description: Enter the Control Group to which the DCTU is assigned.

NOTE: For 5E9(2) and later, 0 - 1 is used for SMs; 0 - 3 is used for SM-2000s.

Valid Entries:
5E9(1) and earlier: 0 - 1
5E9(2) and later: 0 - 3

Data Rules:

CONTROL GROUP numbers assigned on the following forms must be defined as CI on an EQCI form: EQDCTU (5751 Record), EQDCLU (5810 Record), EQDS (5740 Record), EQDSC3 (5852 Record), EQDUP (5730-2), EQGDSC3 (5860 Record), EQIDCU (5846 Record), EQISLU (5731 Record), EQISTF (5823 Record), EQLU (5710 Record), EQPSU (5741 Record), EQRA (5821 Record), EQTU (5720 Record), EQFIU (5753 Record), EQMSU (5750 Record), EQRCLK (5723 Record). Furthermore, the EQSTAT on the matching EQCI form must be greater than or equal to the equipment status value on the equipment form (i.e., "O"' is greater than "G" which is greater than "U").

2.6 CONTROL PORT

Description: Enter the Control Port to which the DCTU is assigned.
Valid Entries: 0 - 22

Data Rules:

Control Port assignments cannot be duplicated on the following forms: EQDCTU (5751 Record), EQDCLU (5810 Record), EQDS (5740 Record), EQDSC3 (5852 Record), EQDUP (5730-2), EQGDSC3 (5860 Record), EQIDCU (5846 Record), EQISLU (5731 Record), EQRISLU (5732 Record), EQISTF (5823 Record), EQLU

Copyright © 2006 Lucent Technologies

(5710 Record), EQPSU (5741 Record), EQRA (5821 Record), EQTU (5720 Record), EQFIU (5753 Record), EQMSU (5750 Record), EQRCLK (5723 Record).

For 5E12 and later, for the EQAIU, EQIDCU, EQISLU, EQRISLU and EQPSU forms, two control ports are assigned based on the Control Port entered on the form. The first is the Control Port entered on the form, the second Control Port is one plus the Control Port entered on the form. Non-SM-2000 class processors reserve Control Group/Control Port 0/0 and 0/1 for the Local Digital Service unit. No other unit may specify Control Group/Control Port 0/0 or 0/1 for non-SM-2000 class processors. Non-SM-2000 class processors reserve Control Group/Control Port 0/0 and 0/1 for the Local Digital Service unit. No other unit may specify Control Group/Control Port 0/0 or 0/1 for non-SM-2000 class processors.

2.7 EQUIPMENT BAY

Description: Enter the Bay of the frame in which the DCTU is mounted.
Valid Entries:
5E9(1) and earlier: 0 - 4
5E9(2) and later: 0 - 208

Valid EQUIPMENT BAY Entries, 5E9(2) - 5E16(1)

Entry	Definition
0 - 4	Switching Module (non-SM-2000).
0 - 14	SM-2000; SM Cabinent aisle.
100 - 104	SM-2000; Back panel; wiring position.
200 - 208	SM-2000; Front panel; door position.

Valid EQUIPMENT BAY Entries for 5E16(2) and later

Entry			Type
000 - 004			SM
000 - 014,	100 - 104,	200 - 208,	SM-2000
A00 - A14,	B00 - B04,	C00 - C08,	
D00 - D14,	E00 - E04,	F00 - F08,	
G00 - G14,	H00 - H04,	J00 - J08,	
K00 - K14,	L00 - L04,	M00 - M08,	
N00 - N14,	P00 - P04,	Q00 - Q08,	
R00 - R14,	S00 - S04,	T00 - T08,	
U00 - U14,	V00 - V04,	W00 - W08,	
X00 - X14,	Y00 - Y04,	Z00 - Z08	

Data Rules:

If 1 is entered, UNIT TYPE on the EQIM form (5700 Record) must be "MCTU3", "SMPU3", "SMPU4", or an SM-2000 class processor.

2.8 EQUIPMENT AISLE

Description: Enter the Equipment Location Aisle Number of the frame in which the DCTU is mounted. This entry consists of a floor and aisle number. The first and second digits, from the left, are the floor number. Valid floor numbers are 00-99. The third and fourth digits, from the left, are the aisle number. Valid aisle numbers are 00-99. It is recommended that floor 00 be used for equipment located in the basement per floor plan designation.
Valid Entries: 0000 - 9999

Copyright © 2006 Lucent Technologies

```
eqdctu                          5ESS Switch            _
(5751)                    OFFICE DATA ADMINISTRATION
                         DIRECTLY CONNECTED TEST UNIT


* 1. SWITCHING MODULE  002


  2. DCTU STATUS       O
  3. DCTU CLI          00000000

  4. CONTROL GROUP     0
  5. CONTROL PORT      15

  6. EQUIPMENT BAY     4
  7. EQUIPMENT AISLE   0105
```

Figure 1 SAMPLE EQDCTU FORM 5E6 - 5E14 SOFTWARE RELEASES

```
eqdctu                          5ESS Switch            _
                          OFFICE DATA ADMINISTRATION
(5751)                   DIRECTLY CONNECTED TEST UNIT

*1. SWITCHING MODULE ___

 2. DCTU STATUS O
#3. DCTU CLI    ________
 4. INTF UNIT   0

#5. CONTROL GROUP _
#6. CONTROL PORT  __

#7. EQUIPMENT BAY   ___
#8. EQUIPMENT AISLE ____
```

Figure 2 SAMPLE EQDCTU FORM 5E15 AND LATER SOFTWARE RELEASES

Copyright © 2006 Lucent Technologies

SEC. 27: 5752 RECORD
PRECISION MEASUREMENT UNIT FORM (EQPMU)

1. GENERAL

The 5752 Record is available with the 5E1 and later Software Releases. It is used to defined PMUs (Precision Measurement Units) associated with the DCTU (Directly Connected Test Unit).

Prior to the 5E14 Software Release, each PMU has four ports/circuits. These ports/circuits furnish access to the MTB (Metallic Test Bus) and EAN (Equipment Access Network). These in turn connect any PMU port/circuit to any other PMU port/circuit on the same DCTU. Port/Circuit 0 and 1 information should be entered on the 5752-1 Record and Port/Circuit 2 and 3 information should be entered on 5752-2 Record. This form is used to make the metallic port assignments.

For new offices and units destined for factory testing, all EQSTATUS entries must be "O" (Operational). During offline ODA database retrofits, the other valid values are acceptable provided:

A. All EQSTATUS entries contain the same value, and

B. The EQSTATUS values on the EQPMU form are lower than, or equal to, in the equipment status hierarchy than the DCTU STATUS on the EQDCTU form (5751 Record). The hierarchy from lowest to highest is "U" (Unequipped), "G" (Growth) and "O" (Operational).

Effective with 5E14 and later Software Releases, the DCTU Bus Feature (99-5E-4720) is available (see Division 2, Section 7AL). This feature modified the screen format and functionality to allow each DCTU PMU port to access up to four MA packs on different MMSU (Multiple Metallic Service Unit) shelves within the same MMSU service group. Thus, four MTB fields and Ports A through D are used to define the DCTU PMUs and the LO DPN field was changed to LO DPN A - D to accommodate this feature modification.

1.1 Recent Change View

The Recent Change View for this form is 20.9.

2. FORM AND RECORD ENTRIES

2.1 *SWITCHING MODULE

Description: Enter the Switching Module in which the Precision Measurement Unit is mounted.

Required Field.
Valid Entries: 1 - 192

2.2 *PMU

Description: Enter the Precision Measurement Unit Number.

Required Field.
Valid Entries:
5E13 and earlier: 1 - 3
5E14 and later: 0 - 2

2.3 PMU EQSTATUS

Copyright © 2006 Lucent Technologies

Description: Enter the equipage status of the Precision Measurement Unit.

Required Field.

Default: O

Valid PMU EQSTATUS Entries	
Entry	**Definition**
U	Unequipped.
G	Growth.
O	Operational.

2.4 PMU CLI

Description: Enter the Change Level Indicator of the Precision Measurement Unit.

Required Field.
Valid Entries: 0 - 7FFFFFFF (hexadecimal)
For a complete listing of valid CLI values, J-Drawing and list combinations, see Division 8, Section 1.

2.5 EAN EQSTATUS

Description: Enter the equipage status of the Equipment Access Network.

Required Field.

Default: O

Valid EAN EQSTATUS Entries	
Entry	**Definition**
U	Unequipped.
G	Growth.
O	Operational.

DCTU A-D/Port A-D/MTB

Effective with the 5E14 Software Release, the DCTU Bus Feature (99-5E-4720) is available (see Division 2, Section 7AL). This feature modified the existing MTB field to allow each DCTU PMU port to access up to four MA packs on different MMSU shelves within the same MMSU service group. Twelve new MTB fields were added to the screen to the existing 4 MTB fields. The MTB A0, B0, C0 and D0 (Section 2.7 - Section 2.10) are input fields. The remaining twelve MTB fields provide display-only, system-calculated data based on entries in the MTB A0, B0, C0, and D0 fields.

NOTE: To avoid repetition, because the format and valid entries for the MTB A0 - AD fields are identical, data entry instructions are provided once (only at the MTB A0) field.

2.6 MTB

Description: Enter the Metallic Test Bus assignment for each metallic port/circuit.

NOTE: For 5E14 and later, this field name was changed to MTB A0 through MTB D0. See the MTB A0 field for data entry information.

Required Field.

Copyright © 2006 Lucent Technologies

2.7 MTB A0

Description: Enter the Metallic Test Bus assignment for each metallic port/circuit.

Required Field.

Software Release: 5E14 and later
Valid Entries:

DISTRIBUTE POINT NUMBER			
Equipment		**Format**	**Valid Entries**
Switching Module	SM	XXX	1-192
Metallic Service Unit	MSU	X	0-1
Service Group	SVG	X	0-1
Board	BRD	XX	00-31
Distribute Point Number	DPN	XX	00-14

Data Rules:

If the MTB for this pack resides on an ORM (Optically Remote Module) for an SM or an EXM-2000, an RSM (Remote Switching Module) or a TRM (Two-Mile Remote Module) unit, the MTB assigned to this unit must terminate to an SM with the same value of SITE ID and this SM must be the Common Resource Module (denoted by MASTER MODULE on a corresponding EQSITE form (5722 Record)). This check does not apply to co-located ORMs/TRMs sharing resources as it is not possible (in static data) to distinguish co-located ORMs/TRMs from ORMs/TRMs which are not co-located.

The MTB and DPN for DCTU A, B, C, and D, respectively, must reside on the same SM.

2.8 MTB B0

Description: Enter the Metallic Test Bus assignment for each metallic port/circuit.

Required Field.
Valid Entries: See the MTB A0 field, DISTRIBUT POINT table.

Data Rules:

The MTB and DPN for DCTU A, B, C, and D, respectively, must reside on the same SM.

2.9 MTB C0

Description: Enter the Metallic Test Bus assignment for each metallic port/circuit.

Required Field.
Valid Entries: See the MTB A0 field, DISTRIBUTE POINT table.

Data Rules:

The MTB and DPN for DCTU A, B, C, and D, respectively, must reside on the same SM.

2.10 MTB D0

Description: Enter the Metallic Test Bus assignment for each metallic port/circuit.

Required Field.

Copyright © 2006 Lucent Technologies

Valid Entries: See the MTB A0 field, DISTRIBUTE POINT table.

Data Rules:

The MTB and DPN for DCTU A, B, C, and D, respectively, must reside on the same SM.

LO DPN A - LO DPN D

Effective with the 5E14 Software Release, the DCTU Bus Feature (99-5E-4720) is available (see Division 2, Section 7AL). This feature modified the existing MTB field which in turn caused the existing LO DPN fields to be renamed (Section 2.12 - Section 2.15). See the LO DPN A field for usage information.

NOTE: To avoid repetition, because the format and valid entries for the LO DPN fields are identical, data entry instructions are provided once (only at the LO DPN A) field.

2.11 LO DPN

Description: Enter the LO (Low) Distribute Point Number. The LO DPN actually designates two DPNs, the Low DPN and the High DPN (LO DPN + 1).

NOTE: For 5E14 and later, this field name was changed to LO DPN A - LO DPN D. See the LO DPN A field for usage information.

Required Field.

2.12 LO DPN A

Description: Enter the LO DPN A number.

Required Field.

Software Release: 5E14 and later
Valid Entries:

DISTRIBUTE POINT NUMBER			
Equipment		**Format**	**Valid Entries**
Switching Module	SM	XXX	1-192
Metallic Service Unit	MSU	X	0-1
Service Group	SVG	X	0-1
Board	BRD	XX	00-31
Distribute Point Number	DPN	XX	00-14

Data Rules:

The MTB and DPN for DCTU A, B, C, and D, respectively, must reside on the same SM.

For 5E13 and earlier, the DPN for circuit 0, 1, 2, or 3 must not be assigned to point 31 on the MSU board.

LO DPN assignments for circuits 0, 1, 2 and 3 must be unique.

If one LO DPN is entered, all four LO DPNs must be entered.

For 5E14 and later, the DPN for DCTU A, B, C, and D, respectively, must not be assigned to point 31 on the MSU board.

Copyright © 2006 Lucent Technologies

LO DPN assignments for DCTU A, B, C, and D must be unique.

2.13 LO DPN B

Description: Enter the LO DPN B number.

Required Field.
Valid Entries: See the LO DPN A field, DISTRIBUTE POINT table.

2.14 LO DPN C

Description: Enter the LO DPN C number

Required Field.
Valid Entries: See the LO DPN A field, DISTRIBUTE POINT table.

2.15 LO DPN D

Description: Enter the LO DPN D number.

Required Field.
Valid Entries: See the LO DPN A, DISTRIBUTE POINT table.

```
eqpmu                              5ESS Switch            _
(5752)                       OFFICE DATA ADMINISTRATION
                             PRECISION MEASUREMENT UNIT


* 1. SWITCHING MODULE  ___
* 2. PMU               _

  3. PMU EQSTATUS      O               5. EAN EQSTATUS      O
  4. PMU CLI           ________

                          MTB         EQSTATUS          LO DPN
                        ---------     --------         --------
     circuit 0:    6.   _________       7.  _       8. _________
     circuit 1:    9.   _________      10.  _      11. _________
     circuit 2:   12.   _________      13.  _      14. _________
     circuit 3:   15.   _________      16.  _      17. _________
```

Figure 1 SAMPLE EQPMU FORM 5E13 AND EARLIER SOFTWARE RELEASES

```
eqpmu                              5ESS Switch
SCREEN 1 OF 2                OFFICE DATA ADMINISTRATION
(5752)                     PRECISION MEASUREMENT UNIT FORM
```

```
*1. SWITCHING MODULE ___                DCTU A                    DCTU B
*2. PMU              _             PORT A   __              PORT B   __
 3. PMU EQSTATUS     O         #7. MTB A0   __________  #13. MTB B0   __________
#4. PMU CLI          _________     MTB A1   __________      MTB B1   __________
 5. EAN EQSTATUS     O             MTB A2   __________      MTB B2   __________
                                   MTB A3   __________      MTB B3   __________
                               11. LO DPN A __________   17. LO DPN B __________
```

```
eqpmu                              5ESS Switch            _
SCREEN 2 OF 2              OFFICE DATA ADMINISTRATION
(5752)                   PRECISION MEASUREMENT UNIT FORM

         DCTU C                      DCTU D
     PORT C   __                 PORT D   __
#19. MTB C0   __________     #25. MTB D0   __________
     MTB C1   __________          MTB D1   __________
     MTB C2   __________          MTB D2   __________
     MTB C3   __________          MTB D3   __________
 23. LO DPN C __________      29. LO DPN D __________
```

Figure 2 SAMPLE EQPMU FORM 5E14 AND LATER SOFTWARE RELEASES

Copyright © 2006 Lucent Technologies

SEC. 28: 5753 RECORD
FACILITY INTERFACE UNIT FORM - EQFIU

1. GENERAL

The Facility Interface Unit Form is used to provide Facility Interface Buses to a DLTU (Digital Line Trunk Unit) providing T1 Carrier umbilicals from a RSM (Remote Switching Module) and is available with the 5E1 and later Software Releases.

1.1 Recent Change View

The corresponding Recent Change View for this form is 20.4.

2. FORM AND RECORD ENTRIES

2.1 BASE AND CONTROL, ESS UNIT

Enter the Base and Control number and the office name on each record.

2.2 *SWITCHING MODULE

Description: Enter the Switching Module Number.

Required Field.
Valid Entries: 1 - 192

2.3 *FIU SERVICE GROUP

Description: Enter the Facility Interface Unit Service Group Number.

Required Field.
Valid Entries: 0 or 1

2.4 EQUIPMENT STATUS

Description: Enter the Status of the Equipment.

Valid EQUIPMENT STATUS Entries	
Entry	**Definition**
U	Unequipped.
G	Growth.
O	Operational.

For new offices and units destined for factory testing, operational is the only allowed value. During offline ODA data base retrofits, the other values are valid.

2.5 EQUIPMENT CLI

Description: Enter the Change Level Indicator of the equipment.
Valid Entries: 0 to 7FFFFFFF hex

For a complete listing of valid CLI values, J-Drawing and list combinations, see Division 8, Section 1.

Copyright © 2006 Lucent Technologies

2.6 INTF UNIT

Description: The Interface Unit field was added to support the 5E15 Optically Extended Control and Data Unit feature. This is a Recent Change only field. See Division 2, Section 9V.
Valid Entries: 0 - 8

2.7 CONTROL GROUP

Description: Enter the Control Group Number.

Data Rules:

Both FIU Service Groups must be assigned to Control Group 1.

CONTROL GROUP numbers assigned on the following forms must be defined as CI on an EQCI form: EQDCTU (5751 Record), EQDCLU (5810 Record), EQDS (5740 Record), EQDSC3 (5852 Record), EQDUP (5730-2), EQGDSC3 (5860 Record), EQIDCU (5846 Record), EQISLU (5731 Record), EQISTF (5823 Record), EQLU (5710 Record), EQPSU (5741 Record), EQRA (5821 Record), EQTU (5720 Record), EQFIU (5753 Record), EQMSU (5750 Record), EQRCLK (5723 Record). Furthermore, the EQSTAT on the matching EQCI form must be greater than or equal to the equipment status value on the equipment form (i.e., "O"' is greater than "G" which is greater than "U").

2.8 CONTROL PORT

Description: Enter the Control Port Number.
Valid Entries: 20 or 21

Data Rules:

Service Group 0 must be assigned to Control Port 20. Service Group 1 must be assigned to Control Port 21.

Control Port assignments cannot be duplicated on the following forms: EQDCTU (5751 Record), EQDCLU (5810 Record), EQDS (5740 Record), EQDSC3 (5852 Record), EQDUP (5730-2), EQGDSC3 (5860 Record), EQIDCU (5846 Record), EQISLU (5731 Record), EQRISLU (5732 Record), EQISTF (5823 Record), EQLU (5710 Record), EQPSU (5741 Record), EQRA (5821 Record), EQTU (5720 Record), EQFIU (5753 Record), EQMSU (5750 Record), EQRCLK (5723 Record).

For 5E12 and later, for the EQAIU, EQIDCU, EQISLU, EQRISLU and EQPSU forms two control ports are assigned based on the Control Port entered on the form. The first is the Control Port entered on the form, the second Control Port is one plus the Control Port entered on the form. Non-SM-2000 class processors reserve Control Group/Control Port 0/0 and 0/1 for the Local Digital Service unit. No other unit may specify Control Group/Control Port 0/0 or 0/1 for non-SM-2000 class processors. Non-SM-2000 class processors reserve Control Group/Control Port 0/0 and 0/1 for the Local Digital Service unit. No other unit may specify Control Group/Control Port 0/0 or 0/1 for non-SM-2000 class processors.

2.9 EQUIPMENT BAY

Description: Enter the Equipment Location Bay Number.

Valid Entries are: 0 - 4

2.10 UNIT VERTICAL

Copyright © 2006 Lucent Technologies

Description: Enter the Equipment Location Vertical Position Number.
Valid Entries: 0 - 84

2.11 EQUIPMENT AISLE

Description: Enter the Equipment Location Aisle Number. This entry consists of a floor and aisle number.
Valid Entries: 0000 - 9999

Data Rules:

It is recommended that floor 00 be used for equipment located in the basement per floor plan designation.

```
eqfiu                            5ESS Switch            _
                          OFFICE DATA ADMINISTRATION
(5753)                      FACILITY INTERFACE UNIT

*1. INTERFACE MODULE  ___
*2. FIU SERVICE GROUP _

 3. EQUIPMENT STATUS O
#4. EQUIPMENT CLI    ________

 5. CONTROL GROUP 1
#6. CONTROL PORT  __

#7. EQUIPMENT BAY   _
#8. UNIT VERTICAL   __

 #9. EQUIPMENT AISLE ____
```

Figure 1 SAMPLE EQFIU FORM 5E14 AND EARLIER SOFTWARE RELEASES

```
eqfiu                            5ESS Switch            _
                          OFFICE DATA ADMINISTRATION
(5753)                      FACILITY INTERFACE UNIT

 *1. INTERFACE MODULE  ___
 *2. FIU SERVICE GROUP _

  3. EQUIPMENT STATUS O
 #4. EQUIPMENT CLI    ________

     INTF UNIT       0
  6. CONTROL GROUP   1
 #7. CONTROL PORT    __
 #8. EQUIPMENT BAY   _
 #9. UNIT VERTICAL   __
#10. EQUIPMENT AISLE ____
```

Copyright © 2006 Lucent Technologies

Figure 2 SAMPLE EQFIU FORM 5E15 AND LATER SOFTWARE RELEASES

SEC. 30: 5810 RECORD
DIGITAL CARRIER LINE UNIT EQUIPMENT RECORD
DIGITAL CARRIER LINE UNIT EQUIPAGE FORM (EQDCLU)
DIGITAL CARRIER LINE UNIT PACK EQUIPAGE FORM (EQDCLP)

1. GENERAL

The 5810 Record is used to define equipment information for the DCLU (Digital Carrier Line Unit). This record is generated by two input forms: EQDCLU and EQDCLP.

The DCLU terminates SLC-96 RTs (Remote Terminals). A maximum of six RTs (576 lines) can be connected to a DCLU, three per Service Group. A DCLU may be arranged with one of two LCRs (Line Concentration Ratios), 4.5:1 and 9:1. A DCLU with an LCR of 4.5:1 requires two data port assignments and a 9:1 DCLU requires only one. A DCLU can be arranged with only one LCR. For (5E9(2) and later, the FACILITY ID field was added to optionally identify the DCLU facility.

1.1 Carrier Group Alarm Hash Indexes

The CGA (Carrier Group Alarm) data is associated with the VT/DS1 and STE/STS facilities. For 5E9(2) and later, only 522 hash indexes are available per switching module. One hash index is allocated to each instance of the following for a specific SM:

- 1 per each pair STE/STS on a specified SM (EQSTE form). (The EQSTE form is associated with the DNU-S.)
- 1 per each VT (Virtual Tributary) on a specified SM (EQVT form). (The EQVT form is associated with the DNU-S.)
- 1 per each DFI (Digital Facility Interface) of a DLTU (Digital Line/Trunk Unit) where FAC IND is 0 or 1, and DFI TYPE is not "H1" or "H2", i.e. DFI USAGE of "H1" and "H2" are not counted (EQDUP form). (The EQDUP form is associated with DLTU.)
- 1 per each DFI-2 (2 per EQDUP form) where FAC IND is 3. (The EQDUP form is associated with DLTU.)
- 1 per pack - POS, EQST, CLI, CLEI combination. (30 packs per DCLU on EQDCLP form) (The EQDCLP form is associated with DCLU.)
- 1 per IFAC - EQSTAT, SUP MTHD, PUB43801 combination. (20 per IDCU on the EQIFAC form) (The EQIFAC form is associated with IDCU.)

The sum of the above total number of allocated hash indexes (instances) cannot be greater then 522 for any one specific SM.

1.2 Recent Change View

The corresponding Recent Change views for this form are 19.6 and 20.6.

2. FORM ENTRIES - EQDCLU

2.1 BASE AND CONTROL , ESS UNIT

Enter the Base and Control Number and the office name on each record.

Copyright © 2006 Lucent Technologies

2.2 *SWITCHING MODULE

Description: Enter the Switching Module Number.

Required Field.
Valid Entries: 1 - 192

2.3 *DIGITAL CARRIER LINE UNIT

Description: Enter the Digital Carrier Line Unit Number.

Required Field.
Valid Entries:

5E14 and earlier: 0 - 7 (SM)
5E15 and later: 0 - 15 (SM-2000)

Data Rules:

See paragraph Section 1.1 on Carrier Group Alarm Hash Indexes.

DCLUs share the same unit number range with IDCUs. Therefore, unit numbers assigned on this form may not be assigned on any EQIDCU form with the same SM number.

2.4 *SERVICE GROUP

Description: Enter the Service Group Number.

Required Field.
Valid Entries: 0 or 1

2.5 EQUIPMENT STATUS

Description: Enter the Equipment Status of the DCLU.

Required Field.

Valid EQUIPMENT STATUS Entries

Entry	Description
G	Growth.
O	Operational.
U	Unequipped.

Data Rules:

If S-DFIs are defined on the EQDCLP form, but the corresponding T1 lines and RT assignments from the SLCRT form (5106 Record) are not present at this time, then set the Equipment Status to "G". If the corresponding S-DFIs are assigned on the SLCRT form, the Equipment Status should equal "O".

2.6 INTF UNIT

Description: Enter the Interface Unit number. This field was added to support the 5E15 Optically Extended Control and Data Unit feature. See Division 2, Section 9V.

Copyright © 2006 Lucent Technologies

Required Field.
Valid Entries: 0 - 8

Data Rules:

When INTF UNIT is greater than 0, it must be defined on the EQXCDU form for the same Switching Module. In addition, the EQSTAT value on the EQCI must not exceed the MOD CTL SG0/1 EQSTAT on the EQXCDU form (5853 Record). (EQSTAT of "O" is greater than EQSTAT of "G", and EQSTAT of "G" is greater than EQSTAT of "U".)

The SM/INTF UNIT/DATA GRP combinations entered on this form must be defined on a EQDI form or a EQXCDU form. Also, the EQSTAT on the matching EQDI or EQXCDU form must be greater than or equal to the equipment status value ("O", "G", or "U") on this form (e.g., "O" is greater than "G" which is greater than "U"). Note also that when INTF UNIT is greater than 0 and DATA GRP is 0, these Data Groups are defined on the EQXCDU form.

For 5E16(2) and later, when INTF UNIT is 0, EQUIPMENT BAY must be 000 - 014, 100 - 104, or 200 - 208.

2.7 #CONTROL GROUP

Description: Enter the Control Group Number.

Required Field.
Valid Entries: 0 or 1

Data Rules:

CONTROL GROUP 0, Ports 0 and 1 may not be assigned on this form. They are reserved for the local DSU.

CONTROL GROUP numbers assigned on the following forms must be defined as CI on an EQCI form: EQDCTU (5751 Record), EQDCLU (5810 Record), EQDS (5740 Record), EQDSC3 (5852 Record), EQDUP (5730-2), EQGDSC3 (5860 Record), EQIDCU (5846 Record), EQISLU (5731 Record), EQISTF (5823 Record), EQLU (5710 Record), EQPSU (5741 Record), EQRA (5821 Record), EQTU (5720 Record), EQFIU (5753 Record), EQMSU (5750 Record), EQRCLK (5723 Record). Furthermore, the EQSTAT on the matching EQCI form must be greater than or equal to the equipment status value on the equipment form (i.e., "O"' is greater than "G" which is greater than "U").

2.8 CONTROL PORT A

Description: Enter the Control Port A Number.

Required Field.
Valid Entries: 0 - 22.

Data Rules:

Control Port A and B must not be identical.

Service Group 0 requires even port numbers, and Service Group 1 requires odd port numbers. For 5E4(2) and later, this field must be less than 22.

Control Port assignments cannot be duplicated on the following forms: EQDCTU (5751 Record), EQDCLU (5810 Record), EQDS (5740 Record), EQDSC3 (5852 Record), EQDUP (5730-2), EQGDSC3 (5860 Record), EQIDCU (5846 Record), EQISLU (5731 Record), EQRISLU (5732 Record), EQISTF (5823 Record), EQLU

Copyright © 2006 Lucent Technologies

(5710 Record), EQPSU (5741 Record), EQRA (5821 Record), EQTU (5720 Record), EQFIU (5753 Record), EQMSU (5750 Record), EQRCLK (5723 Record).

For 5E12 and later, for the EQAIU, EQIDCU, EQISLU, EQRISLU and EQPSU forms, two control ports are assigned based on the Control Port entered on the form. The first is the Control Port entered on the form, the second Control Port is one plus the Control Port entered on the form. Non-SM-2000 class processors reserve Control Group/Control Port 0/0 and 0/1 for the Local Digital Service unit. No other unit may specify Control Group/Control Port 0/0 or 0/1 for non-SM-2000 class processors. Non-SM-2000 class processors reserve Control Group/Control Port 0/0 and 0/1 for the Local Digital Service unit. No other unit may specify Control Group/Control Port 0/0 or 0/1 for non-SM-2000 class processors.

2.9 #CONTROL PORT B

Description: Enter the Control Port B Number.

Required Field.
Valid Entries: 0 - 22

Data Rules:

Control Port A and B must not be identical.

Service Group 0 requires even port numbers, and Service Group 1 requires odd port numbers. For 5E4(2) and later, this field must be less than 22.

2.10 #DATA GROUP

Description: Enter the Data Group number.

Required Field.
Valid Entries: 0 or 1

2.11 #DATA PORT A

Description: Enter the Data Port A number.

Required Field.
Valid Entries: 0 - 15

Data Rules:

The following forms cannot have a duplicate Data Port assignment on the same Switching Module: EQDCLU (5810 Record), EQDS (5740 Record), EQDSC3 (5852 Record), EQDUP (5730-2), EQGDSC3 (5860 Record), EQIDCU (5846 Record), EQISLU (5731 Record), EQISTF (5823 Record), EQLU (5710 Record), EQPSU (5741 Record), EQRA (5821 Record), EQTU (5720 Record).

2.12 DATA PORT B

Description: Enter the Data Port B number. Data Port B is required only if the DCLU is arranged with a 4.5:1 LCR (Line Concentration Ratio). Leave blank for a 9:1 LCR.
Valid Entries: 0 - 15

2.13 #EQUIPMENT BAY

Copyright © 2006 Lucent Technologies

Description: Enter the Equipment Location Bay number.

Required Field.
Valid Entries:

Valid EQUIPMENT BAY Entries, 5E9(2) - 5E16(1)

Entry	Definition
0 - 4	Switching Module (non-SM-2000).
0 - 14	SM-2000; SM Cabinet aisle.
100 - 104	SM-2000; Back panel; wiring position.
200 - 208	SM-2000; Front panel; door position.

Valid EQUIPMENT BAY Entries for 5E16(2) and later

Entry			Type
000 - 004			SM
000 - 014,	100 - 104,	200 - 208,	SM-2000
A00 - A14,	B00 - B04,	C00 - C08,	
D00 - D14,	E00 - E04,	F00 - F08,	
G00 - G14,	H00 - H04,	J00 - J08,	
K00 - K14,	L00 - L04,	M00 - M08,	
N00 - N14,	P00 - P04,	Q00 - Q08,	
R00 - R14,	S00 - S04,	T00 - T08,	
U00 - U14,	V00 - V04,	W00 - W08,	
X00 - X14,	Y00 - Y04,	Z00 - Z08	

Data Rules:

If 1 is entered, UNIT TYPE on the EQIM form (5700 Record) must be "MCTU3", "SMPU3", "SMPU4", or an SM-2000 class processor.

For 5E16 and later releases, when INTG UNIT is 0 EQUIPMENT BAY must be 000 - 014, 100 - 104, or 200 - 208.

2.14 #EQUIPMENT VERTICAL

Description: Enter the vertical equipment location that specifies the bottom of the unit.

Required Field.
Valid Entries: 0 - 84

2.15 #EQUIPMENT AISLE

Description: Enter the Equipment Location Aisle number. This entry consists of a floor and aisle number. The first and second digits, from the left, are the floor number. Valid floor numbers are 00-99. The third and fourth digits, from the left, are the aisle number. Valid aisle numbers are 00-99. It is recommended that floor 00 be used for equipment located in the basement per floor plan designation.

Required Field.
Valid Entries: 0000 - 9999

2.16 #COMMON CONTROL CIRCUIT CLI

Description: Enter the CLI (Change Level Indicator) for the Common Control Circuit.

Required Field.
Valid Entries: 0 to 7FFFFFFF, hexadecimal

Copyright © 2006 Lucent Technologies

For a complete listing of valid CLI values, J-Drawing and list combinations, see Division 8, Section 1.

3. FORM ENTRIES - EQDCLP

3.1 INTERFACE MODULE

Description: Enter the INTERFACE MODULE. This must be the same value as entered in the INTERFACE MODULE field on the EQDCLU form.

Required Field.
Valid Entries: 1 - 192

3.2 DCLU NUMBER

Description: Enter the DCLU NUMBER. This must be the same value as entered in the DIGITAL CARIER LINE UNIT field on the EQDCLU form.

Required Field.
Valid Entries:
5E14 and earlier: 0 - 7
5E15 and later: 0 - 15

PACK

Up to 30 DCLU packs may be equipped on this form. The following fields (Section 3.3 - Section 3.7) define the position, equipment status, CLI and CLEI for each pack. For 5E9(2) and later, the FACILITY ID field was added to this form to optionally provide a description of the DCLU facility.

3.3 POSITION

Description: Enter the SLC DFI Pack Position.
Valid Entries:
DCLU Service Group 0: 0 - 14
DCLU Service Group 1: 15 - 29

3.4 EQST

Description: Enter the equipment status of the DCLU. For new offices and units destined for factory testing, "O" is the only allowed value. During offline ODA database retrofits, values "G" and "U" are valid.

Valid EQST Entries

Entry	Description
G	Growth.
O	Operational.
U	Unequipped.

Data Rules:

If the S-DFI is not assigned on an SLCRT form (5106 Record), EQST must be "G".

3.5 CLI

Copyright © 2006 Lucent Technologies

Description: Enter the CLI (Change Level Indicator) for the SLC DFI Pack.
Valid Entries: 0 - 7FFFFFFF, hexadecimal

For a complete listing of valid CLI values, J-Drawing and list combinations, see Division 8, Section 1.

3.6 CLEI

Description: Enter the Common Language Equipment Identification Number. See the appropriate J-drawing for the applicable CLEI code.
Valid Entries: 10 characters

3.7 FACILITY ID

Description: Enter the description for the DCLU facility. This field may be left blank.

Software Release: 5E9(2) and later.
Valid Entries: up to 25 characters.

```
eqdclu                          5ESS Switch           _
                        OFFICE DATA ADMINISTRATION
(5810)               DIGITAL CARRIER LINE UNIT EQUIPAGE

 *1. INTERFACE MODULE          ___    #13. EQUIPMENT AISLE            ____
 *2. DIGITAL CARRIER LINE UNIT _      #14. COMMON CONTROL CIRCUIT CLI ________
 *3. SERVICE GROUP             _
  4. EQUIPMENT STATUS          O
 #5. CONTROL GROUP             _
 #6. CONTROL PORT A            __
 #7. CONTROL PORT B            __
 #8. DATA GROUP                _
 #9. DATA PORT A               __
 10. DATA PORT B               __
#11. EQUIPMENT BAY             ___
#12. EQUIPMENT VERTICAL        __
```

Figure 1 SAMPLE EQDCLU FORM 5E14 AND EARLIER SOFTWARE RELEASES

```
eqdclu                          5ESS Switch           _
                        OFFICE DATA ADMINISTRATION
(5810)               DIGITAL CARRIER LINE UNIT EQUIPAGE

 *1. INTERFACE MODULE          ___    #13. EQUIPMENT VERTICAL         __
 *2. DIGITAL CARRIER LINE UNIT __     #14. EQUIPMENT AISLE            ____
 *3. SERVICE GROUP             _      #15. COMMON CONTROL CIRCUIT CLI ________
  4. EQUIPMENT STATUS          O
```

```
  5. INTF UNIT                 0
 #6. CONTROL GROUP             _
 #7. CONTROL PORT A            __
 #8. CONTROL PORT B            __
 #9. DATA GROUP                _
#10. DATA PORT A               __
 11. DATA PORT B               __
#12. EQUIPMENT BAY             ___
```

Figure 2 SAMPLE EQDCLU FORM 5E15 AND LATER SOFTWARE RELEASES

```
SCREEN 1 OF 2                      5ESS Switch
eqdclp                     OFFICE DATA ADMINISTRATION
(5810)             DIGITAL CARRIER LINE UNIT PACK EQUIPAGE
* 1. INTERFACE MODULE        ___       * 2. DCLU NUMBER        _
  3. PACK
row POS EQST    CLI        CLEI        FACILITY ID
 1   __   _   ________   __________  __________________________
 2   __   _   ________   __________  __________________________
 3   __   _   ________   __________  __________________________
 4   __   _   ________   __________  __________________________
 5   __   _   ________   __________  __________________________
 6   __   _   ________   __________  __________________________
 7   __   _   ________   __________  __________________________
 8   __   _   ________   __________  __________________________
 9   __   _   ________   __________  __________________________
10   __   _   ________   __________  __________________________
11   __   _   ________   __________  __________________________
12   __   _   ________   __________  __________________________
13   __   _   ________   __________  __________________________
14   __   _   ________   __________  __________________________
15   __   _   ________   __________  __________________________
```

```
SCREEN 2 OF 2                      5ESS Switch             _
eqdclp                     OFFICE DATA ADMINISTRATION
(5810)             DIGITAL CARRIER LINE UNIT PACK EQUIPAGE
  3. PACK
row POS EQST    CLI        CLEI        FACILITY ID
 16  __   _   ________   __________  __________________________
 17  __   _   ________   __________  __________________________
 18  __   _   ________   __________  __________________________
 19  __   _   ________   __________  __________________________
 20  __   _   ________   __________  __________________________
 21  __   _   ________   __________  __________________________
```

Copyright © 2006 Lucent Technologies

```
 22  __   _   ________   __________  ___________________________
 23  __   _   ________   __________  ___________________________
 24  __   _   ________   __________  ___________________________
 25  __   _   ________   __________  ___________________________
 26  __   _   ________   __________  ___________________________
 27  __   _   ________   __________  ___________________________
 28  __   _   ________   __________  ___________________________
 29  __   _   ________   __________  ___________________________
 30  __   _   ________   __________  ___________________________
```

Figure 3 SAMPLE EQDCLUP FORM 5E11 AND EARLIER SOFTWARE RELEASES

```
eqdclp                              5ESS Switch
SCREEN 1 OF 3               OFFICE DATA ADMINISTRATION
(5810)                DIGITAL CARRIER LINE UNIT PACK EQUIPAGE

*1. INTERFACE MODULE ___
*2. DCLU NUMBER      __
```

```
eqdclp                              5ESS Switch
SCREEN 2 OF 3               OFFICE DATA ADMINISTRATION
(5810)                DIGITAL CARRIER LINE UNIT PACK EQUIPAGE

                      3. PACK (EQFDI)
ROW POS EQST CLI       CLEI        FACILITY ID
  1 __   _   ________ __________ ___________________________
  2 __   _   ________ __________ ___________________________
  3 __   _   ________ __________ ___________________________
  4 __   _   ________ __________ ___________________________
  5 __   _   ________ __________ ___________________________
  6 __   _   ________ __________ ___________________________
  7 __   _   ________ __________ ___________________________
  8 __   _   ________ __________ ___________________________
  9 __   _   ________ __________ ___________________________
 10 __   _   ________ __________ ___________________________
 11 __   _   ________ __________ ___________________________
 12 __   _   ________ __________ ___________________________
 13 __   _   ________ __________ ___________________________
 14 __   _   ________ __________ ___________________________
 15 __   _   ________ __________ ___________________________
```

```
eqdclp                              5ESS Switch            _
SCREEN 3 OF 3               OFFICE DATA ADMINISTRATION
(5810)                DIGITAL CARRIER LINE UNIT PACK EQUIPAGE

                      3. PACK (EQFDI)
```

```
ROW POS EQST CLI      CLEI       FACILITY ID
 16 __   _   ________ __________ ____________________________
 17 __   _   ________ __________ ____________________________
 18 __   _   ________ __________ ____________________________
 19 __   _   ________ __________ ____________________________
 20 __   _   ________ __________ ____________________________
 21 __   _   ________ __________ ____________________________
 22 __   _   ________ __________ ____________________________
 23 __   _   ________ __________ ____________________________
 24 __   _   ________ __________ ____________________________
 25 __   _   ________ __________ ____________________________
 26 __   _   ________ __________ ____________________________
 27 __   _   ________ __________ ____________________________
 28 __   _   ________ __________ ____________________________
 29 __   _   ________ __________ ____________________________
 30 __   _   ________ __________ ____________________________
```

Figure 4 SAMPLE EQDCLUP FORM 5E12 AND LATER SOFTWARE RELEASES

Copyright © 2006 Lucent Technologies

SEC. 31: 5811 RECORD
TEST BUS CONTROL UNIT EQUIPMENT RECORD - EQTBCU

1. GENERAL

The 5811 Record is used to define Metallic Test Bus, Scan Point and Distribute Point assignments for Test Bus Control Units.

Distribute and Scan points must be unique within the 5ESS Switch.

The assignment of MTBs (Metallic Test Buses) for TBCUs (Test Bus Control Units) should be evenly spread between MSU/MMSU (Metallic Service Unit/Modular MSU) shelves and service groups that have metallic testing. This should be done to increase efficiency of ALIT (Automatic Line Instilation Testing) and to prevent a loss of metallic testing if a service group goes out of service.

1.1 Recent Change View

The corresponding Recent Change View for this form is 18.12.

2. FORM AND RECORD ENTRIES

2.1 BASE AND CONTROL GROUP, ESS UNIT

Enter the Base and Control Number and the office name on each record.

2.2 *METALLIC TEST BUS

Description: Enter the MTB (Metallic Test Bus) assignment for a TBCU (Test Bus Control Unit).

Required Field.

This number consists of:

Valid METALLIC TEST BUS Entries

Equipment		Format	Valid Entries
Switching Module	SM	XXX	1 - 192
Metallic Service Unit	MSU	X	0 - 1
Service Group	SVG	X	0 - 1
Board	BRD	XX	00 - 15 (Regular)
			00 - 31 (Modular)
Bus	BUS	XX	00 - 14

Data Rules:

Metallic Test Bus Point 15 of every MACC (Metallic Access) (pack is reserved for general internal MSU and MMSU diagnostics). Protocol test or diode resistor test are included in general internal diagnostics.

The MTB assignment must be defined on the EQMSP or EQMMSP form (5750 Record) with "MACC" entered in the TYPE field.

2.3 TBCU SCAN POINT

Copyright © 2006 Lucent Technologies

Description: Enter the Scan Point Number assigned to the TBCU.

Required Field.

This number consists of:

Valid TBCU SCAN POINT Entries

Equipment		Format	Valid Entries
Switching Module	SM	XXX	1 - 192
Metallic Service Unit	MSU	X	0 - 1
Service Group	SVG	X	0 - 1
Board	BRD	XX	00 - 15 (Regular)
			00 - 31 (Modular)
SPN	Scan Point Number	XX	00 - 30

Data Rules:

The Scan Point must be assigned to the same SM, MSU and Service Group as the Metallic Test Bus.

The SPN (Scan Point Number) must be defined on the EQMSP or EQMMSP form with "SCAN" entered in the TYPE field.

2.4 DPN 1 TO REMOVE DIODE AND CUT THRU TO SLC MTB

Description: Enter the assigned Distribute Point Number.

Required Field.

This number consists of:

Valid DPN 1 Entries

Equipment		Format	Valid Entries
Switching Module	SM	XXX	1 - 192
Metallic Service Unit	MSU	X	0 - 1
Service Group	SVG	X	0 - 1
Board	BRD	XX	00 - 15 (Regular)
			00 - 31 (Modular)
DPN	Distribute Point Number	XX	00 - 31

Data Rules:

The Distribute Point must be assigned to the same SM, MSU and SVG as the Metallic Test Bus.

The DPN (Distribute Point Number) must be defined on the EQMSP or EQMMSP form with "DIST" entered in the TYPE field.

2.5 DPN 2 TO CUT THRU AND GIVE CHNL TEST RESULT

Description: Enter the assigned Distribute Point Number.

Required Field.

Copyright © 2006 Lucent Technologies

This number consists of:

Valid DPN 2 Entries			
Equipment		**Format**	**Valid Entries**
Switching Module	SM	XXX	1 - 192
Metallic Service Unit	MSU	X	0 - 1
Service Group	SVG	X	0 - 1
Board	BRD	XX	00 - 15 (Regular)
			00 - 31 (Modular)
DPN/SPN	Distribute Point Number/Scan Point Number	XX	00 - 31

Data Rules:

The Distribute Point must be assigned to the same SM, MSU and SVG as the Metallic Test Bus.

The DPN must be defined on the EQMSP or EQMMSP form with "DIST" entered in the TYPE field.

2.6 DPN 3 TO GIVE CHNL TEST RESULT EXCEPT "NO RESPONSE"

Description: Enter the assigned Distribute Point Number.

Required Field.

This number consists of:

Valid DPN 3 Entries			
Equipment		**Format**	**Valid Entries**
Switching Module	SM	XXX	1 - 192
Metallic Service Unit	MSU	X	0 - 1
Service Group	SVG	X	0 - 1
Board	BRD	XX	00 - 15 (Regular)
			00 - 31 (Modular)
DPN	Distribute Point Number	XX	00 - 31

Data Rules:

The Distribute Point must be assigned to the same SM, MSU and SVG as the Metallic Test Bus.

The DPN must be defined on the EQMSP or EQMMSP form with "DIST" entered in the TYPE field.

2.7 DPN 4 TO GIVE CHNL TEST RESULT OF GOOD MPTY OR COIN

Description: Enter the assigned Distribute Point Number.

Required Field.

This number consists of:

Valid DPN 4 Entries			
Equipment		**Format**	**Valid Entries**
Switching Module	SM	XXX	1 - 192
Metallic Service Unit	MSU	X	0 - 1
Service Group	SVG	X	0 - 1
Board	BRD	XX	00 - 15 (Regular)
			00 - 31 (Modular)
DPN	Distribute Point Number	XX	00 - 31

Data Rules:

The Distribute Point must be assigned to the same SM, MSU, and SVG as the Metallic Test Bus.

The DPN must be defined on the EQMSP or EQMMSP form with "DIST" entered in the TYPE field.

2.8 DPN 5 TO GIVE CHNL TEST RESULT OF "NO RESPONSE"

Description: Enter the assigned Distribute Point Number.

Required Field.

This number consists of:

Valid DPN 4 Entries			
Equipment		**Format**	**Valid Entries**
Switching Module	SM	XXX	1 - 192
Metallic Service Unit	MSU	X	0 - 1
Service Group	SVG	X	0 - 1
Board	BRD	XX	00 - 15 (Regular)
			00 - 31 (Modular)
DPN	Distribute Point Number	XX	00 - 31

Data Rules:

The Distribute Point must be assigned to the same SM, MSU, and SVG as the Metallic Test Bus.

The DPN must be defined on the EQMSP or EQMMSP form with "DIST" entered in the TYPE field.

```
eqtbcu                          5ESS Switch            _
                        OFFICE DATA ADMINISTRATION
(5811)                      TEST BUS CONTROL UNIT

*1. METALLIC TEST BUS _________
#2. TBCU SCAN POINT   _________

#3. DPN1 TO REMOVE DIODE & CUT  THRU TO SLC MTB        _________
#4. DPN2 TO CUT THRU & GIVE CHNL TEST RESULT           _________
```

Copyright © 2006 Lucent Technologies

```
#5. DPN3 TO GIVE CHNL TEST RESULT EXCEPT "NO RESPONSE" _________
#6. DPN4 TO GIVE CHNL TEST RESULT OF GOOD MPTY OR COIN _________

 #7. DPN5 TO GIVE CHNL TEST RESULT OF "NO RESPONSE"     _________
```

Figure 1 SAMPLE EQTBCU FORM SAMPLE 5811 RECORD

Copyright © 2006 Lucent Technologies

SEC. 32: 5812 RECORD
TRANSMISSION RATE CONVERTER UNIT EQUIPAGE FORM - EQCMTRCU

1. GENERAL

The 5812 Record is available with the 5E3 and later Software Releases. It is used to define the physical location of the TRCU (Transmission Rate Converter Unit), TRCU2 (TRCU Version 2) or the TRCU3 (TRCU Version 3) for up to two ORMs (Optically Remote Switching Modules). For more information, see Division 2, Section 9N.

TRCUs are physically located in a Miscellaneous Cabinet in the host office. TRCUs are required if the Office has any ORMs. The TRCU connects between a CM2/TMS (Communication Module 2/Time Multiplexed Switch) via NCTs (Network Control Timing Links) and the external ORM.

For 5E9(2) and later, an SM field was added to this form to define a TRCU2 for an EXM-2000 (EXtended switching Module-2000) to provide SM-2000 functionality at a remote location through an optical connection.

NOTE: TRCU2 must be used when provisioning EXM-2000. In addition, the EQCMTRCU form must be entered for hardware residing on the TMS (Local TRCU, SM = 0) and for the hardware residing on the EXM (Remote TRCU, SM = 1 - 192). When specifying the local and remote TRCU information, the same TRCU number must be used for both sides. For ORM, the EQCMTRCU form must be entered for hardware residing on the TMS (Local TRCU, SM = 0) only. The following table illustrates this rule:

Valid TRCU Entries (5E12 and earlier)

TRCU Number	SM	TRCU Type	Defintion
1	000	TRCU	Local TRCU, ORM (SM 1).
2	000	TRCU2	Local TRCU2, EXM-2000 (SM 2).
2	002	TRCU2	Remote TRCU2, EXM-2000 (SM 2).

The TRCU2 for an SM and the TRCU2 for an EXM-2000 must be unique. EXM-2000 TRCU2s cannot be duplicated on two different SMs. In addition, the UNIT TYPE and SM USAGE fields on the EQIM form must be defined to reflect either an SM or SM-2000. Corresponding TRCU2 NCT links must be defined on the EQORMLINK form (5813 Record) for 5E9(1) and earlier, or the EQTMSLINK form (5851 Record) for 5E9(2) and later.

For 5E12 and later, a new TRCU3 replaces the discontinued TRCU2.

CAUTION: For 5E15 and later, with the introduction of CM3, the EQCORE form (5701 Record) must be defined before the EQCMTRCU form can be defined.

1.1 Recent Change View

The corresponding Recent Change View for this form is 17.18.

2. FORM ENTRIES

2.1 BASE AND CONTROL, ESS UNIT

Enter the Base and Control Number and Office Name on each record.

2.2 *TRCU NUMBER

Copyright © 2006 Lucent Technologies

Description: Enter the Transmission Rate Converter Unit Number. One TRCU can support two ORMs. The TRCU acts as an interface between the ORM's transmission facility and the TMS.

It is recommended that TRCU values be assigned sequentially starting with 1.

Required Field.
Valid Entries:
For 5E12 and earlier: 1 - 96
For 5E12 and later: 1 for classic ORM, or
1 - 96 for SM-2000

Data Rules:

The value entered in this field must also appear in the TRCU NUMBER field on an EQORMLINK form. Each TRCU NUMBER on an EQORMLINK form must be defined in the TRCU NUMBER field of an EQCMTRCU form.

For 5E12 and later, when UNIT TYPE is "SM2000", "SM2005", or "SMU6" (5E16(2) and later), and SM USAGE is "ORM" on the EQIM form, and EQUIPMENT BAY and UNIT VERTICAL are entered on the corresponding EQCMTRCU form, these fields are required to have certain, specific values if the TRCU TYPE is "TRCU2". The following table shows these required combinations:

TRCU2 LOCATION COMBINATIONS

TRCU NUMBER	EQUIPMENT BAY	UNIT VERTICAL
1	1	45
2	1	53
3	1	62
4	2	45
5	2	53
6	2	62

2.3 *SM

Description: Enter the Switching Module number. This field is used to define local or remote TRCUs or TRCU2s for an SM, an SM-2000, or an EXM-2000.

Software Release: 5E9(2) and later.
Required Field.
Valid Entries:

Valid SM Entries

Entry	Defintion
0	Local TRCU/TRCU2; SMs and SM-2000.
1 - 192	Local/Remote TRCU2; Optically Remote SM-2000 (i.e., EXM-2000).

Data Rules:

If SM is greater than 0, the TRCU NUMBER must be defined on a corresponding EQTMSLINK form (5813 Record).

If SM is greater than 0, the value of the TRCU NUMBER cannot be duplicated on any other EQCMTRCU form where SM is greater than 0.

When SM is greater than 0, SM USAGE must be ORM on the EQIM form (5700 Record).

Copyright © 2006 Lucent Technologies

When SM is greater than 0, TRCU TYPE must be TRCU2.

When SM is 0, EQLBAY must be 0 - 11.

For 5E12 and later, when SM is 0, EQLAISLE, EQLBAY and EQLUNVER must be entered.

For 5E12 and later, when SM is not 0 and TRCU TYPE is "TRCU" or "TRCU2", TRCU NUM must be 1 - 6.

For 5E12 and later, when SM is not 0 and TRCU TYPE is "TRCU3", EQL AISLE, EQLBAY and EQLUNVER must all be entered.

For 5E12 and later, when SM is not 0 and TRCU TYPE is "TRCU3", TRCU NUMBER must be 1 or 7 - 14.

2.4 TRCU TYPE

Description: Enter the Transmission Rate Converter Unit Type.

Required Field
Default: TRCU
Valid Entries:

Valid TRCU TYPE Entries

Entry	Defintion
TRCU	Transmission Rate Converter Unit Type 1
TRCU2	Transmission Rate Converter Unit Type 2
TRCU3	Transmission Rate Converter Unit Type 3 (5E12 and later). For more information, see Division 2, Section 9N.

Data Rule:
When defining EQCMTRCU forms for an EXM-2000, TRCU TYPE must be "TRCU2" for both local TRCU (SM = 0) and remote TRCU (SM = the number of the EXM-2000).

When "TRCU" is entered, the assigned TRCU NUMBERs must be entered on the EQTMSLINK form with TRC CLI set to 0.

When "TRCU2" is entered, and is assigned to an ORM, the assigned TRCU NUMBERs must be entered on the EQTMSLINK form with TRC CLI values equal to 1, 2, 4, 8, or 10.

For 5E12 and later, when the entry CM VINTAGE is set to "1" on the EQCORE form, the entry TRCU TYPE cannot be "TRCU3" on the EQCMTRCU form(s) for CM1 offices.

For 5E12 and later, when EQUIPMENT BAY and UNIT VERTICAL are entered on the EQCMTRCU form, these fields are required to have certain, specific values if the TRCU TYPE is "TRCU" or "TRCU2". If the corresponding EQIM form has a UNIT TYPE that is not "SM2000", "SM2005", or "SMU6" and its SM USAGE is "ORM", then EQUIPMENT BAY must be "1" and UNIT VERTICAL must be equal to MODULE PROCESSOR VERT + 17 on the EQIM form.

2.5 EQLAISLE

Description: Enter the Equipment Location Aisle Number. This entry consists of two, two-digit entries which define the floor and aisle number. The first and second digits (from the left) are the floor number. The third and fourth digits (from the left) are the aisle number. It is recommended that floor 00 be used for equipment located in the basement per floor plan designation.

Required Field.

Copyright © 2006 Lucent Technologies

Valid Entries: 00 - 99 (for both the floor and the aisle number)

Data Rules:

For 5E12 and later, when SM is not 0 and TRCU TYPE is "TRCU" or "TRCU2" on the EQCMTRCU form, and EQUIPMENT AISLE is entered, EQUIPMENT AISLE is required to be equal to EQUIPMENT AISLE on the corresponding EQIM form.

Navigation help: SM on EQCMTRCU points to SM on EQIM.

2.6 EQLBAY

Description: Enter the Equipment Location Bay number of the Miscellaneous Cabinet that contains the TRCU.

Required Field.
Valid Entries:

5E9(1) and earlier: 0 - 11

5E9(2) and later: 0 - 208

Valid EQLBAY Entries, 5E9(2) and later

Entry	Definition
0 - 11	Switching Module (non-SM-2000).
0 - 14	SM-2000/EXM-2000; SM Cabinent aisle.
100 - 104	SM-2000/EXM-2000; Back panel; wiring position.
200 - 208	SM-2000/EXM-2000; Front panel; door position.

2.7 EQLUNVER

Description: Enter the Vertical Equipment Location that specifies the bottom of the TRC Unit. The recommended values are based on cabinet type:

5E9(1) and earlier:
7-foot cabinets: 22, 30, 39, 48, 56, 65, 74.
6-foot cabinets: 15, 24, 32, 41, 49, 58.

5E9(2) and later:
7-foot cabinets: 22, 30, 39, 48, 56, 65, 74.
6-foot cabinets: 7, 15, 24, 32, 41, 49, 58.

Required Field.
Valid Entries: 0 - 84

```
eqcmtrcu                          5ESS Switch            _
(5812)                     OFFICE DATA ADMINISTRATION
                   TRANSMISSION RATE CONVERTER UNIT EQUIPAGE

*1. TRCU NUM   01
*2. SM         000
 3. TRCU TYPE  TRCU
```

```
#4. EQLAISLE   ____
#5. EQLBAY     ___
#6. EQLUNVER   __
```

Figure 1 SAMPLE EQCMTRCU FORM 5E12 AND LATER SOFTWARE RELEASES

Copyright © 2006 Lucent Technologies

SEC. 33: 5813 RECORD
NCT LINK BETWEEN CM2/TMS TRCU ORM EQUIPAGE FORM - EQORMLINK

1. GENERAL

The 5813 Record is available with 5E9(1) and earlier Software Releases to define an ORM (Optically Remote Switching Module) for an SM. Effective with the 5E9(2) Software Release, the functionality of this form was replaced by the EQTMSLINK form (5851 Record) to define an ORM for both the SM and an SM-2000. For SM-2000, an ORM is referred to as an EXM-2000 (EXtended SM-2000); see Division 8, Section 53. For 5E9(1) and earlier, this record is used to define the CLI (Circuit and Change Level Indicator) data for the NCT (Network Control Timing) Links to a TRCU (Transmission Rate Converter Unit). The ORM can be remoted up to 100 miles from the host office over a standard transmission facility. An ORM, indicated by an SM USAGE value equal to "ORM" on an EQIM form (5700 Record), requires TRCU hardware to provide a proper interface of the NCT Link to the standard transmission facility.

There are four TRC CKTs associated with a TRCU, and a maximum of two ORMs can be specified for a given TRCU. Each ORM requires two TRC CKTs. It is recommended to assign TRC CKTs 0 and 1 to the first required ORM and TRC CKTs 2 and 3 to the optional second ORM.

Whenever there is an SM USAGE of "ORM" defined on an EQIM form, then a corresponding EQORMLINK form must be entered.

The fields associated with the first, required ORM (ORM NUMBER, NCT EVEN LINK, TMS 0 TRC CKT, TMS 0 TRC CLI, TMS 1 TRC CKT and TMS 1 TRC CLI) are all required.

The fields associated with the second, optional ORM must all be entered or all be left blank.

1.1 Recent Change View

The Recent Change View for this form is 18.1.

2. FORM AND RECORD ENTRIES

2.1 BASE AND CONTROL, ESS UNIT

Enter the Base and Control number and office name on each record.

2.2 *TRCU NUMBER

Description: Enter the TRCU Number. The TRCU Number is assigned in a sequential order starting with 1. These TRCU(s) are located in the Miscellaneous Cabinet in the host office as defined on an EQCMTRCU form (5812 Record).
Valid Entries: 1 - 96

Data Rules:

The value entered in this field must also appear in the TRCU NUMBER field on an EQCMTRCU form. Each TRCU NUMBER entered on an EQCMTRCU form must appear in the TRCU NUMBER field of an EQORMLINK form.

2.3 ORM NUMBER

Description: Enter the Switching Module Number of the ORM.

Copyright © 2006 Lucent Technologies

Valid Entries: 1 - 192

Data Rules:

The value entered here must be defined in the SM field of an EQIM form with the corresponding SM USAGE equal to "ORM".

An ORM NUMBER entry may only appear once on an EQORMLINK form. Thus, if two ORM NUMBER entries are the same on one EQORMLINK form, or if an ORM NUMBER entry on one EQORMLINK form appears on another EQORMLINK form, an error will be induced.

2.4 NCT EVEN LINK

Description: Enter the Even NCT Link number which is connected between the TRCU and the TMS (Timed Multiplexed Switch). This should correspond to the NCT EVEN LINK value defined on an EQIM form where the SM entry equals the ORM NUMBER entry on this form.
Valid Entries: 2 - 380 (even numbers)

Data Rules:

The same value may not be used for both NCT EVEN LINKS on one EQORMLINK form.

2.5 TMS 0 TRC CKT

Description: Enter a TRC CKT value from the TMS Side 0. There are a maximum of four TRC CKTs defined on one EQORMLINK form. Each TRC CKT value on a single form must be unique.
Valid Entries: 0 - 3

2.6 TMS 0 TRC CLI

Description: Enter the eight-digit hexadecimal Change Level Indicator number of the TRCU from TMS Side 0.
Valid Entries: 0 - 7FFFFFFF (hexadecimal)

For a complete listing of valid CLI values, J-Drawing and list combinations, see Division 8, Section 1.

2.7 TMS 1 TRC CKT

Description: Enter a TRC CKT value from Side 1.
Valid Entries: 0 - 3

2.8 TMS 1 TRC CLI

Description: Enter the eight-digit hexadecimal Change Level Indicator number of the TRCU from TMS side 1.
Valid Entries: 0 - 7FFFFFFF (hexadecimal)

For a complete listing of valid CLI values, J-Drawing and list combinations, see Division 8, Section 1.

Copyright © 2006 Lucent Technologies

```
* 1. TRCU NUMBER 12

                                    TMS 0                    TMS 1
                                    ____                     ____

     ORM        NCT            TRC        TRC           TRC        TRC
   NUMBER    EVEN LINK         CKT        CLI           CKT        CLI

  2. 005       3. 006          4. 0    5. 00000000      6. 1     7.00000000
  8. 006       9. 008         10. 2   11. 00000000     12. 3    13.00000000
```

Figure 1 SAMPLE EQORMLINK FORM 5E6 - 5E9(1) SOFTWARE RELEASES

Copyright © 2006 Lucent Technologies

SEC. 34: 5820 RECORD
MISCELLANEOUS DISTRIBUTE POINT NUMBER EQUIPAGE FORM -EQDPN

1. GENERAL

The 5820 Record is available with the 5E1 and later Software Releases. It is used to define Miscellaneous Distribute Point Number Assignments.

One, and only one Distribute Point Number is required for the Dial Tone Delay Alarm Circuit.

1.1 Recent Change View

The corresponding Recent Change View for this form is 8.7.

2. FORM AND RECORD ENTRIES

2.1 BASE AND CONTROL GROUP, ESS UNIT

Enter the Base and Control Number and the office name on each record.

2.2 *DISTRIBUTE POINT NUMBER

Description: Enter the Distribute Point Number.

Required Field.

This number consists of:

Valid Distribute Point Number Entries

Equipment		Format	Valid Entries
Switching Module	SM	XXX	1 - 192
Metallic Service Unit	MSU	X	0 - 1
Service Group	SVG	X	0 - 1
Board	BRD	XX	00 - 15 (Regular)
			00 - 31 (Modular)
PT	Distribute Point Number	XX	00 - 31

2.3 ASSIGNED CIRCUIT NAME

Description: Enter the appropriate Circuit Name.

Default: DTDA (Dial Tone Delay Alarm)
Valid Entries: DTDA

2.4 ASSIGNED CIRCUIT LEAD DESIGNATION

Description: Enter the appropriate Circuit Lead Designation.
Default: RSTDP (Restore Distribute Point, Dial Tone Delay Alarm)
Valid Entries: RSTDP

Copyright © 2006 Lucent Technologies

```
eqdpn                              5ESS Switch            _
                            OFFICE DATA ADMINISTRATION
(5820)          MISCELLANEOUS DISTRIBUTE POINT NUMBER EQUIPAGE

*1. DISTRIBUTE POINT NUMBER           _________
 2. ASSIGNED CIRCUIT NAME             DTDA

  3. ASSIGNED CIRCUIT LEAD DESIGNATION RSTDP
```

Figure 1 SAMPLE MISCELLANEOUS DISTRIBUTE POINT NUMBER EQUIPAGE FORM - EQDPN

Copyright © 2006 Lucent Technologies

SEC. 35: 5821 RECORD
RECORDED ANNOUNCEMENT FUNCTION FORM - EQRA

1. GENERAL

The 5821 Record is available with 5E3 and later Software Releases. The Recorded Announcement Function Capability performs independent playback of pre-recorded, variable length and variable content announcements. The dial-through capability receives and detects Touch-Tone signals.

The EQRA form defines the RAF (Recorded Announcement Function) unit, and the SAS (Service Announcement System) services unit. If a RAF unit is defined on this form, then a corresponding EQRAP form (5822 Record) must be defined for the RAF circuit packs.

When this form is defined, a corresponding TRUNK form (5204 Record) must be entered with a RAF EN defined.

When an EQRA form is assigned to an SM where the value of UNIT TYPE is not an SM-2000 class processor (on the corresponding EQIM form), the following criteria must be met:

- CONTROL GROUP must be 0 or 1
- DATA GROUP must be 0 or 1
- DATA PORT must be 0 - 15
- EQUIPMENT BAY must be 0 - 4

1.1 Recent Change View

The corresponding RC/V view to this form is 19.10 and 20.22.

2. FORM AND RECORD ENTRIES

2.1 BASE AND CONTROL, ESS UNIT

Enter the Base and Control Number and office name on each record.

2.2 * SWITCHING MODULE

Description: Enter the Switching Module number.
Valid Entries: 1 - 192

Data Rules:

Value must be defined on a EQIM form (5700 Record).

2.3 * RAF UNIT

Description: The name of this field was changed to UNIT NUMBER in 5E9(2). This field name applies to 5E3 - 5E9(1). See UNIT NUMBER for usage information.

2.4 * UNIT NUMBER

Copyright © 2006 Lucent Technologies

Description: Enter the Unit Number used to specify the announcement function number. (This field was called RAF UNIT for 5E3 - 5E9(1).)

Required Field.
Valid Entries: 0 - 7

2.5 # UNIT TYPE

Description: Enter the Unit Type used to specify the announcement function unit type.

Software Release: 5E9(2) and later.
Required Field.
Default: RAF
Valid Entries:

Valid UNIT TYPE Entries

Entry	Definition
RAF	Recorded Announcement Function
SAS	Service Announcement System

Data Rules:

RAF - If UNIT TYPE is "RAF", then:
ANN CNT must be 0.
CLI must be entered (5E10 and later)
DTA CNT must be 0.
SERVICE TYPE must be entered.
TDEC CNT must be 0.

SAS - If UNIT TYPE is "SAS," then:
AOC must be "N".
CLI must be entered (5E10 and later)
SERVICE CNT must be 0.
SERVICE TYPE must not be entered.

If EQUIPMENT STATUS is "O" and UNIT TYPE is "SAS", then the sum of the entries for DTA CNT + ANN CNT + TDEC CNT must be between 1 and 32.

The minimum configuration for a SAS PSG is one SAS control board and one SAS memory board. Every entry on the EQRA form with UNIT TYPE set to "SAS", must have a corresponding entry on the EQSASP form (the corresponding EQSASP form is found by matching SWITCHING MODULE and UNIT NUMBER on the EQRA form to SM and UNIT NUMBER on the EQSASP form).

The number of matching TRUNK forms for each EQRA form, where UNIT TYPE equals "SAS", must equal the sum of DTA CNT, ANN CNT, and TDEC CNT. The matching TRUNK forms are found by matching SWITCHING MODULE and UNIT NUMBER on the EQRA form to the first 3 digits of RAF EN and the 4th digit of RAF EN, respectively, on the TRUNK form.

For 5E10 and later, when UNIT TYPE is "SAS", DTA CNT, ANN CNT and TDEC CNT must all be entered.

When an EQRA(s) form is assigned to an SM where the value of UNIT TYPE is an SM-2000 class processor (on the corresponding EQIM form), the UNIT TYPE on the EQRA form must be "SAS".

Copyright © 2006 Lucent Technologies

When UNIT TYPE is "SAS", CLI must be 0 or 1.

When UNIT TYPE is "SAS" and CSU is "Y", CLI must be 0.

When UNIT TYPE is "SAS" and CSU is "N", and CLI is 0, UNIT OFFSET must be 1 - 16.

When UNIT TYPE is "SAS" and CLI is 1 on this form, and UNIT TYPE (SMPU/TSIU combination Model Number) is "SM2000" on the EQIM form (5700 Record), UNIT OFFSET on this form must be in a range of 0 - 17.

When UNIT TYPE is "SAS", CLI is 1, and UNIT OFFSET is in a range of 20 to 23 on this form, and UNIT TYPE (SMPU/TSIU combination Model Number) is "SM2005" or "SMPU6" on the EQIM form (5700 Record), EQUIPMENT UNIT VERTICAL and EQUIPMENT AISLE on the EQIM form must match MODULE PROCESSOR VERT and EQUIPMENT AISLE on the EQRA form, and the first character of EQUIPMENT BAY must be zero, "A", "D", "G", "K", "N", "R", "U", or "X", and the second and third character must equal zero.

2.6 # EQUIPMENT STATUS

Description: Enter the Equipment Status.

Required Field.

Valid EQUIPMENT STATUS Entries

Entry	Definition
G	Growth
O	Operational
U	Unequipped

Data Rules:

For 5E9(2) and later, if EQUIPMENT STATUS is "O" and UNIT TYPE is "SAS", then the sum of the entries for DTA CNT + ANN CNT + TDEC CNT must be between 1 and 32.

2.7 CLI

Description: Enter the CLI indicator for the recorded announcement function.

Software Release: 5E10 and later
Valid Entries: 0 - 7ffffffff

Data Rules:

CLI must be entered if UNIT TYPE is "RAF".

CLI must be entered if UNIT TYPE is "SAS".

2.8 INTF UNIT

Description: This field provides the Interface Unit number.

Required Field.
Valid Entries: 0 - 8

Data Rules:

When INTF UNIT is greater than 0, it must be defined on the EQXCDU form for the same Switching Module.

Copyright © 2006 Lucent Technologies

In addition, the EQSTAT value on the EQCI must not exceed the MOD CTL SG0/1 EQSTAT on the EQXCDU form (5853 Record). (EQSTAT of "O" is greater than EQSTAT of "G", and EQSTAT of "G" is greater than EQSTAT of "U".)

The SM/INTF UNIT/DATA GRP combinations entered on this form must be defined on a EQDI form or a EQXCDU form. Also, the EQSTAT on the matching EQDI or EQXCDU form must be greater than or equal to the equipment status value ("O", "G", or "U") on this form (e.g., "O" is greater than "G" which is greater than "U"). Note also that when INTF UNIT is greater than 0 and DATA GRP is 0, these Data Groups are defined on the EQXCDU form.

CONTROL GROUP numbers assigned on the following forms must be defined as CI on an EQCI form: EQDCTU (5751 Record), EQDCLU (5810 Record), EQDS (5740 Record), EQDSC3 (5852 Record), EQDUP (5730-2), EQGDSC3 (5860 Record), EQIDCU (5846 Record), EQISLU (5731 Record), EQISTF (5823 Record), EQLU (5710 Record), EQPSU (5741 Record), EQRA (5821 Record), EQTU (5720 Record), EQFIU (5753 Record), EQMSU (5750 Record), EQRCLK (5723 Record). Furthermore, the EQSTAT on the matching EQCI form must be greater than or equal to the equipment status value on the equipment form (i.e., "O"' is greater than "G" which is greater than "U").

For 5E16(2) and later, when INTF UNIT is 0, EQUIPMENT BAY must be 000 - 014, 100 - 104, or 200 - 208.

2.9 # CONTROL GROUP

Description: Enter the Control Group number.

Required Field.
Valid Entries:
For 5E9(2) and earlier: 0 or 1
For 5E10 and later: SM: 0 - 1
SM-2000: 0 - 3

Data Rules:

The Control Group and Control Port combinations must be unique for this RAF Unit and all other units assigned to a given SM value.

Control Group 0, Ports 00 and 01 may not be assigned on this form. They are reserved for the Local DSU.

2.10 # CONTROL PORT

Description: Enter the RAF Peripheral Control Port number.

Required Field.
Valid Entries: 0 - 22

Data Rules:

If CONTROL GROUP is O, then CONTROL PORT must not be 0 or 1 because they are reserved for the Local DSU.

Control Port assignments cannot be duplicated on the following forms: EQDCTU (5751 Record), EQDCLU (5810 Record), EQDS (5740 Record), EQDSC3 (5852 Record), EQDUP (5730-2), EQGDSC3 (5860 Record), EQIDCU (5846 Record), EQISLU (5731 Record), EQRISLU (5732 Record), EQISTF (5823 Record), EQLU (5710 Record), EQPSU (5741 Record), EQRA (5821 Record), EQTU (5720 Record), EQFIU (5753 Record),

Copyright © 2006 Lucent Technologies

EQMSU (5750 Record), EQRCLK (5723 Record).

For 5E12 and later, for the EQAIU, EQIDCU, EQISLU, EQRISLU and EQPSU forms, two control ports are assigned based on the Control Port entered on the form. The first is the Control Port entered on the form, the second Control Port is one plus the Control Port entered on the form. Non-SM-2000 class processors reserve Control Group/Control Port 0/0 and 0/1 for the Local Digital Service unit. No other unit may specify Control Group/Control Port 0/0 or 0/1 for non-SM-2000 class processors. Non-SM-2000 class processors reserve Control Group/Control Port 0/0 and 0/1 for the Local Digital Service unit. No other unit may specify Control Group/Control Port 0/0 or 0/1 for non-SM-2000 class processors.

2.11 # DATA GROUP

Description: Enter the Data Group number.

Required Field.
Valid Entries:
For 5E9(2) and earlier: 0 - 1
For 5E10 and later: SM: 0 - 1
SM-2000: 0 - 5

Data Rules:

The Data Group and Data Port combinations must be unique for this RAF or SAS Unit and all other units assigned to a given SM value.

2.12 # DATA PORT

Description: Enter the RAF or SAS Peripheral Data number.

Required Field.
Valid Entries:
For 5E9(2) and earlier: 0 - 15
For 5E10 and later: SM: 0 - 15
SM-2000: 0 - 23

Data Rules:

The following forms cannot have a duplicate Data Port assignment on the same Switching Module: EQDCLU (5810 Record), EQDS (5740 Record), EQDSC3 (5852 Record), EQDUP (5730-2), EQGDSC3 (5860 Record), EQIDCU (5846 Record), EQISLU (5731 Record), EQISTF (5823 Record), EQLU (5710 Record), EQPSU (5741 Record), EQRA (5821 Record), EQTU (5720 Record).

2.13 # UNIT OFFSET

Description: Enter the pack location number of the Common Board (TN1841) within the Digital Services Unit Shelf. The values that are normally used for a RAF are 1, 5, 10 or 14 or SAS for any value except 0 and 17.

Required Field.
Valid Entries: 1 - 16

2.14 # EQUIPMENT BAY

Copyright © 2006 Lucent Technologies

Description: Enter the Equipment Location Bay Number.

Required Field.
Valid Entries:

Valid EQUIPMENT BAY Entries, 5E9(2) - 5E16(1)	
Entry	**Definition**
0 - 4	Switching Module (non-SM-2000).
0 - 14	SM-2000; SM Cabinet aisle.
100 - 104	SM-2000; Back panel; wiring position.
200 - 208	SM-2000; Front panel; door position.

Valid EQUIPMENT BAY Entries for 5E16(2) and later			
Entry			**Type**
000 - 004			SM
000 - 014,	100 - 104,	200 - 208,	SM-2000
A00 - A14,	B00 - B04,	C00 - C08,	
D00 - D14,	E00 - E04,	F00 - F08,	
G00 - G14,	H00 - H04,	J00 - J08,	
K00 - K14,	L00 - L04,	M00 - M08,	
N00 - N14,	P00 - P04,	Q00 - Q08,	
R00 - R14,	S00 - S04,	T00 - T08,	
U00 - U14,	V00 - V04,	W00 - W08,	
X00 - X14,	Y00 - Y04,	Z00 - Z08	

2.15 # EQUIPMENT UNIT VERTICAL

Description: Enter the Equipment Location Vertical Position Number that specifies the bottom of the unit. The only the following entries are expected for:

- 6-foot cabinets - 7, 15, 24, 32, 41, 49, 58
- 7-foot cabinets - 22, 30, 39, 48, 56, 65, 74

Required Field.
Valid Entries: 0 - 84

2.16 # EQUIPMENT AISLE

Description: Enter the 4-digit Equipment Aisle Number.

Required Field.
Valid Entries: A 4-digit Equipment Aisle Number in the following format. It is recommended that floor 00 be used for equipment located in the basement.

EQUIPMENT AISLE NUMBER		
Position	**Format**	**Valid Entries**
Floor	XX	00 - 99
Aisle	XX	00 - 99

2.17 CSU

Description: Is a SAS (Service Announcement System) unit located on a CSU (Combined Services Unit)? For more information on the Combined Services Unit feature, see Division 2, Section 7F.

Software Release: 5E10 and later

Copyright © 2006 Lucent Technologies

Required Field.
Valid Entries: Y, N
Default Value: N

Data Rules:

When CSU is "Y", UNIT TYPE must be "SAS" and UNIT OFFSET must be 11.

If CSU is "N" and UNIT TYPE is "RAF,

- if RAF is 0 or 4, then UNIT OFFSET must be 01.
- if RAF is 1 or 5, then UNIT OFFSET must be 10.
- if RAF is 2 or 6, then UNIT OFFSET must be 05.
- if RAF is 3 or 7, then UNIT OFFSET must be 14.

When an EQRA form is entered with CSU set to "Y", no other EQRA form may be entered on the same SM that also has CSU set to "Y".

RAF SERVICES

The following fields (Section 2.18 - Section 2.20) define RAF SERVICES attributes.

2.18 SERVICE TYPE

Description: Enter the RAF Service Type.

Required Field for 5E9(1) and earlier.

Valid SERVICE TYPE Entries

Entry	Definition
ANN	Announcement Service without the dial-through capability using thirty-two channels.
DTA	Dial through Service using twenty channels by digit receivers. This feature allows digits to be dialed while an announcement is being played. The announcement is terminated when the first digit is detected.
CTR	Coin Tone receiver using twenty channels. This feature allows coin tones to be received while an announcement is being played. The announcement is terminated when the first digit is detected.

Data Rules:

Channels defined on the same SM and RAF Unit must be assigned to the same Trunk Group.

For 5E6 and later Software Releases, if "ANN" is entered, then AOC field must be "N" and SERVICE CNT must be 1-32.

For 5E8 and later:

- if "ANN" or "CTR" is entered, then the corresponding EQRAP form (corresponding forms have the same Switching Modules and same RAF Units) APPLICATION field cannot be "BRCS-RAS", "ISDN-ACS", "BRCS-SLE", "ASP", or "BRCS-2LV".
- if "DTA" (Dial Through Announcement) is entered and the AOC (Announcement Only Channels) field is set to "Y", then on the corresponding EQRAP form the RAF UNIT APPLICATION is either "BRCS-RAS", "ISDN-ACS", "BRCS-SLE", "BRCS-2LV" or "ASP". These APPLICATION(s) cannot have AOC set to "Y".

Copyright © 2006 Lucent Technologies

There are no Announcement Only Channels for these APPLICATION(s).

For 5E9(2) and later:
If UNIT TYPE is "RAF", SERVICE TYPE must be entered.

If UNIT TYPE is "SAS", SERVICE TYPE must not be entered.

2.19 SERVICE CNT

Description: Enter the number of service channels to be initialized on this RAF for the SERVICE TYPE entry ("ANN", "DTA", or "CTR" services).

Required Field.
Default: 0
Valid Entries:

Valid SERVICE CNT Entries

Entry	Definition
1 - 32	for SERVICE TYPE of "ANN"
0 - 20	for SERVICE TYPE of "DTA" or "CTR"

Data Rules:

If the AOC field is "Y", then the valid entries are 0-20 for SERVICE TYPE of "DTA" or "CTR". If AOC field is "N", then for a SERVICE TYPE of "DTA" or "CTR", the valid entries are 1-20.

The quantity of RAF assignments on TRUNK forms cannot exceed the SERVICE CNT on the corresponding EQRA form. The TRKCLS on the associated TKGRP form is "RAFANNC".

For 5E9(2) and later, if UNIT TYPE is "SAS", then SERVICE CNT must be 0.

2.20 AOC

Description: Should the unused channels on RAF units of SERVICE TYPE "DTA" or "CTR" be initialized and assigned as AOC (Announcement Only Channels) on this DTA or CTR? If AOC is "Y", all channels not initialized as "DTA" or "CTR" service types will be initialized as AOC and can be assigned on the TRUNK form (5204 Record).

Example If SERVICE TYPE is "DTA", SERVICE CNT is 15 and AOC is "Y", then 15 channels on this RAF unit are initialized as service type "DTA" and up to 15 channels may be assigned on the TRUNK form to "DTA" service type. Seventeen channels will be initialized as AOC and up to 17 AOCs may be assigned on the TRUNK form.

Example If SERVICE TYPE is "CTR", SERVICE CNT is 20 and AOC is "Y", then 20 channels on this RAF unit will be initialized as service type "CTR" and up to 20 channels may be assigned on the TRUNK form to "CTR" service type. Twelve channels will be initialized as AOC and up to 12 AOCs may be assigned on the TRUNK form.

Required Field.
Default: N
Valid Entries: Y, N

Data Rules:

Copyright © 2006 Lucent Technologies

Channels on the same RAF unit of the same service type must be assigned to the same trunk group on the TKGRP form, with the exception of AOC (Announcement Only Channels) on "DTA" or "CTR" RAFs as defined on the EQRA form may be assigned to a different trunk group. The TRKCLS must be "RAFANNC" for the AOC trunk group.

2.21 PATTERN

This is an output-only field that appears only on the office record and specifies the stuffing pattern assigned to this RAF Unit. For information on stuffing pattern assignment, please refer to Division 3, Section 2Q.

SAS SERVICES

The following fields (Section 2.22 - Section 2.24) define SAS SERVICES RAFs.

2.22 DTA CNT

Description: Enter the number of the DTA (Dial Through Announcement) channels for the SAS.

Software Release: 5E9(2) and later.
Default: 0
Valid Entries: 0 - 32

Data Rules:

If UNIT TYPE is "RAF", then DTA CNT must be 0.

If EQUIPMENT STATUS is "O" and UNIT TYPE is "SAS", then the entries on the DTA CNT field plus the entries on the ANN CNT field and the TDEC CNT field must be between 1 and 32, e.g. DTA CNT + ANN CNT + TDEC CNT must equal a number between 1 and 32.

2.23 ANN CNT

Description: Enter the number of the ANN (Announcement) channels for the SAS.

Software Release: 5E9(2) and later.
Default: 0
Valid Entries: 0 - 32

Data Rules:

If UNIT TYPE is "RAF", then the ANN CNT must be 0.

If EQUIPMENT STATUS is "O" and UNIT TYPE is "SAS", then the entries on the DTA CNT field plus the entries on the ANN CNT field and the TDEC CNT field must be between 1 and 32, e.g. DTA CNT + ANN CNT + TDEC CNT must equal a number between 1 and 32.

2.24 TDEC CNT

Description: Enter the number of the TDEC (Tone Decoder) channels for the SAS.

Software Release: 5E9(2) and later.
Default: 0
Valid Entries: 0 - 32

Copyright © 2006 Lucent Technologies

Data Rules:

If UNIT TYPE is "RAF", TDEC CNT must be 0.

If EQUIPMENT STATUS is "O" and UNIT TYPE is "SAS", then the entries on the DTA CNT field plus the entries on the ANN CNT field and the TDEC CNT field must be between 1 and 32, e.g. DTA CNT + ANN CNT + TDEC CNT must equal a number between 1 and 32.

CHANNEL LIST

For 5E9(2) and later, the following fields (Section 2.25 - Section 2.26) show the assignments of the SAS service type for channels 0 - 31. These (CHANNEL LIST) fields are display only and not for customer input. For initial offices these fields are automatically populated. For growth offices, SWITCHING MODULES which have SAS units will have the CHANNEL LIST populated with the appropriate SAS SERVICES. The CHANNEL LIST on the EQRA form provides the user with an easy way to verify the SAS SERVICES which are assigned on specific CHANNELS.

2.25 CHANNEL

Description: This is a no-change field showing the channel to which a SAS service has been assigned.

2.26 SERVICE

Description: This is a no-change field showing the SAS service that has been assigned to a specific channel.

```
SCREEN 1 OF 2                      5ESS Switch
eqra                      OFFICE DATA ADMINISTRATION
(5821)          ANNOUNCEMENT FUNCTION COMMON CIRCUIT & SERVICES

* 1. SWITCHING MODULE        ___              RAF SERVICES
* 2. UNIT NUMBER             _            13. SERVICE TYPE ___
# 3. UNIT TYPE               RAF          14. SERVICE CNT  00
# 4. EQUIPMENT STATUS        _            15. AOC          N
# 5. CONTROL GROUP           _
# 6. CONTROL PORT            __               SAS SERVICES
# 7. DATA GROUP              _            17. DTA CNT      00
# 8. DATA PORT               __           18. ANN CNT      00
# 9. UNIT OFFSET             __           19. TDEC CNT     00
#10. EQUIPMENT BAY           _
#11. EQUIPMENT UNIT VERTICAL __
#12. EQUIPMENT AISLE         ____
```

```
SCREEN 2 OF 2                      5ESS Switch            _
eqra                      OFFICE DATA ADMINISTRATION
(5821)          ANNOUNCEMENT FUNCTION COMMON CIRCUIT & SERVICES

                            CHANNEL LIST
```

```
CHANNEL SERVICE  CHANNEL SERVICE  CHANNEL SERVICE  CHANNEL SERVICE
  00     ____      10     ____      20     ____      30     ____
  01     ____      11     ____      21     ____      31     ____
  02     ____      12     ____      22     ____
  03     ____      13     ____      23     ____
  04     ____      14     ____      24     ____
  05     ____      15     ____      25     ____
  06     ____      16     ____      26     ____
  07     ____      17     ____      27     ____
  08     ____      18     ____      28     ____
  09     ____      19     ____      29     ____
```

Figure 1 SAMPLE EQRA FORM 5E14 AND EARLIER SOFTWARE RELEASES

```
eqra                                5ESS Switch
SCREEN 1 OF 2              OFFICE DATA ADMINISTRATION
(5821-1/2/3)    ANNOUNCEMENT FUNCTION COMMON CIRCUIT & SERVICES

 *1. SWITCHING MODULE ___      #13. EQUIMENT UNIT VERTICAL __   22. TDEC CNT 00
 *2. UNIT NUMBER      _        #14. EQUIPMENT AISLE        ____
  3. UNIT TYPE        RAF       15. CSU                    N
 #4. EQUIPMENT STATUS _
  5. CLI              ________      RAF SERVICES
  6. INTF UNIT        0         16. SERVICE TYPE ___
 #7. CONTROL GROUP    _         17. SERVICE CNT  00
 #8. CONTROL PORT     __        18. AOC          N
 #9. DATA GROUP       _
#10. DATA PORT        __         SAS SERVICES
#11. UNIT OFFSET      __        20. DTA CNT 00
#12. EQUIPMENT BAY    ___       21. ANN CNT 00




Switching module number. Enter 1 - 192.
```

```
eqra                                5ESS Switch            _
SCREEN 2 OF 2              OFFICE DATA ADMINISTRATION
(5821-1/2/3)    ANNOUNCEMENT FUNCTION COMMON CIRCUIT & SERVICES

                       23. CHANNEL LIST (CHANNEL_LIST)
ROW CHANNEL SERVICE ROW CHANNEL SERVICE ROW CHANNEL SERVICE ROW CHANNEL SERVICE
  1     0    ____    11    10    ____    21    20    ____    31    30    ____
  2     1    ____    12    11    ____    22    21    ____    32    31    ____
  3     2    ____    13    12    ____    23    22    ____
  4     3    ____    14    13    ____    24    23    ____
```

Copyright © 2006 Lucent Technologies

5	4	_____	15	14	_____	25	24	_____
6	5	_____	16	15	_____	26	25	_____
7	6	_____	17	16	_____	27	26	_____
8	7	_____	18	17	_____	28	27	_____
9	8	_____	19	18	_____	29	28	_____
10	9	_____	20	19	_____	30	29	_____

Figure 2 SAMPLE EQRA FORM 5E15 AND LATER SOFTWARE RELEASES

Copyright © 2006 Lucent Technologies

SEC. 36: 5822 RECORD
RECORDED ANNOUNCEMENT FUNCTION PACK FORM - EQRAP

1. GENERAL

The 5822 Record is available with 5E3 and later Software Releases.

This form is used to define the RAF (Recorded Announcement Function) circuit packs. The RAF unit is defined on the EQRA form (5821 Record).

1.1 Recent Change View

The corresponding Recent Change Views for this form are 20.10 and 20.22.

2. FORM AND RECORD ENTRIES

2.1 BASE AND CONTROL, ESS UNIT

Enter the Base and Control Group Number and
Office Name on each record.

2.2 * SWITCHING MODULE

Description: Enter the SM (Switching Module) number.
Valid Entries: 1 - 192

Data Rules:

The entry must be defined on an EQIM form (5700-1 Record).

2.3 * RAF UNIT

Description: The name of this field was changed to UNIT NUMBER in 5E9(2). This field name applies to 5E9(1) and earlier. See UNIT NUMBER for usage information.

2.4 UNIT NUMBER

Description: Enter the Metallic Service Unit number. (This field was called RAF UNIT for 5E9(1) and earlier.)
Valid Entries: 0 - 7

Data Rules:

For 5E9(1) and earlier, the SM and RAF combination must be defined on a EQRA form. For 5E9(2) and later, the SWITCHING MODULE and UNIT NUMBER pair(s) on the EQRAP form must be defined on an EQRA form where "RAF" must be entered as the UNIT TYPE on the EQRA form.

For 5E9(1) and earlier, an EQRA form cannot be submitted without a corresponding EQRAP form. For 5E9(2) and later, an EQRA form, with UNIT TYPE set to "RAF", cannot be submitted without a corresponding EQRAP form.

2.5 # APPLICATION

Description: Enter the type of announcements supported by the announcement storage circuit packs

Copyright © 2006 Lucent Technologies

(TN1053 and TN1054).

For example, if the office requires RACF for a 5E5 office, the TN1053 pack 1 must have a MICROCODE of "5D142A10", "5D142A20" or equivalent. The TN1054 pack 2 must have a MICROCODE of "5D143A10", "5D143A20", "5D143A30" or equivalent. The TN1054 pack 3 may have a MICROCODE of "5D155XXX", if customized announcements are required. XXX is the CIN (Customer Identification Number). Refer to Figure Figure 1 for suggested values for the APPLICATION.

A service group is defined by the RAF packs that are controlled by the RAF controller pack TN833. All packs in a service group must have the same APPLICATION text entry. This entry may be any 8 characters. However, the values given in Figure Figure 1 are the recommended values with the caveat that if more than one pack is in a service group, only one of the recommended values can be used for that group, or a text entry that describes the service group, e.g., "BRCS".

The recommended values, with their corresponding J-drawings, can be found in Figure Figure 1 of this section. In Figure Figure 1 , the Software Release indicates when the particular feature (not the APPLICATION) is available.

NOTE: RAFs with OSPS applications must reside on a loaded SM. The other applications may reside on a basic, standard, or loaded SM.

Software Release: 5E4(2) and later
Required Field.
Valid Entries: 1 - 8 characters (A - Z, 0 - 9, dash (-),

- or underscore (_))

Data Rules:

For 5E6 and 5E7, the ASP (Advanced Services Platform; previously PVN, Private Virtual Network) feature requires an APPLICATION of "ASP" or "PVN". For 5E8 and later, only "ASP" is allowed.

For 5E7 and later, to use the new announcements for the LASS Screen List Editing Feature or for the ACSR Feature the hardware must be upgraded. The EQRAP form for the APPLICATION of "BRCS-SLE", "BRCS_SLE" or "ISDN-ACS"must have the value 5D143A30 entered in the MICROCODE field for PACK 2. This corresponds to an upgraded TN1054 board which must be installed in the RAF before the 5E7 Software Release or subsequent retrofit.

If the EQRA form SERVICE TYPE field has either "ANN" or "CTR" entered, then the corresponding EQRAP form APPLICATION field cannot be "BRCS-RAS", "ISDN-ACS", "BRCS-SLE", "ASP", or "BRCS-2LV".

For 5E8 and later, OSPS-TA applications require two microcode entries. OSPS-TA customized announcements require three microcode entires.

PACK

Fields Section 2.6 - Section 2.7 relate to announcement storage circuit packs. A RAF is equipped with one to three announcement storage circuit packs. The TN1053 circuit pack should be defined as pack 1 and must always be entered. TN1054 circuit packs should be defined as Packs 2 and 3.

Each PACK entered must have EQSTAT (5E3 and later) and MICRO-CODE (5E4(2) and later) entered.

Each PACK entered, in a new office, must have EQSTAT set to "O" (Operational).

Copyright © 2006 Lucent Technologies

2.6 EQSTAT

Description: Enter the Equipment Status.

Valid EQSTAT Entries

Entry	Definition
G	Growth
O	Operational
U	Unequipped

Data Rules:

The Equipment Status on the EQRAP form must be less than or equal to the Equipment Status on the EQRA form.

EQSTAT must be "O" for ODA initial offices.

2.7 MICRO-CODE

Description: Enter the micro-code number of the circuit pack.

See Figure 1 for the required microcode information needed for announcement applications.

Software Release: 5E4(2) and later
Valid Entries: 8 characters, (A - Z, 0 - 9)

Data Rules:

For each PACK entered, both EQSTAT and MICRO CODE must be entered.

DSU2-RAF Common Control for MC5D058A1 TN833 RAF Common Board (J5D003EA1, List 1)

First Release	Feature	List	APPLICATION (EQRAP)	MICRO-CODE (EQRAP) PACK1 (TN1053)	PACK2 (TN1054)	PACK3 (TN1054)	SERVICE TYPE (EQRA)
5E3	OSPS DA	4	OSPS-DA	5D087A10	(Note 1)		ANN
5E3	800 DA	11	OSPS-DA	5D144A10	(Note 1)		ANN
5E4(2)	OSPS TA	10	OSPS-TA	5D114A10	(Note 1)		DTA
5E4(2)	OSPS CTR	10	OSPS-CTR	5D114A10	(Note 1)		CTR
5E6	OSPS TA, MECH	20 (Note 2)	OSPS-TA	5D114A30	(Note 1)		DTA/CTR
5E7	OSPS TA, MECH, CAS3	10	OSPS-TA	5D114A40			DTA
5E7	OSPS TA, VMS	10	OSPS-TA	5D114A40	5D155A10	5D172A10 (Note 9)	DTA
5E7 and 5E8	OSPS TA	10 24	OSPS-TA	5D114A40	5D172A10	(Note 10)	
5E8	OSPS TA	10 24	OSPS-TA	5D114A40	5D172A20	(Note 11)	
5E8	OSPS TA Customized Announcements	10 24	OSPS-TA	5D114A40	5D155A10	5D172A20	
5E6	ASP/PVN	14	ASP/PVN	5D151A10	(Note 1)		DTA
5E5	RACF	12	BRCS-RAS	5D142A10	(Note 1)		DTA
5E7	2LEVEL	22 (Note 3)		5D142A20	(Note 1)		DTA

Copyright © 2006 Lucent Technologies

(Note 7)							
5E5	ACSR	16 (Note 4)	ISDN-ACS	5D142A10	5D143A10	(Note 1)	DTA
		13		5D142A10	5D143A10	(Note 1)	DTA
5E6	LASS	18 (Note 3, 4, 5)	BRCS-SLE	5D142A10	5D143A20	(Note 1)	DTA
5E7	LASS	23 (Note 3, 4,6)	BRCS-SLE	5D142A20	5D143A30	(Note 1)	DTA

1:A customized pack may be used for 5E6 and Later Software Releases: List 15A; (MICRO-CODE=5D155xxx; xxx indicates the Customer Identification Number shown on the label attached to the pack). For 5E5 and later Software Releases, the customized pack may be used for OSPS-TA (list 15A).

2:List 20 provides MECH (More Efficient Call Handling), OSPS-TA, and OSPS-CTR announcements.

3:List 22 provides RACF and 2-Level COT/AC announcements.

4:These packs must be used with List 12 (provides RACF only) or List 22.

5:List 18 provides the ACSR (Automatic Customer Station Rearrangement) and standard 5E6 LASS (Local Area Signaling Services) announcements.

6:List 23 provides ACSR and Bellcore Compliant SLE announcements.

7:With 5E6 only, Limited 2-Level COT/AC is available.

8 Memory board 5D172A10[L24] is an optional board containing additional OSPS-TA announcement phrases for 5e7 and later Software Releases. It must appear as the second board with 5D114A40[L10] as the first board.

9 When memory board 5D172A10[L24] is used with memory board 5D155A10[L15], the two may be equipped in any order in the second and third positions.

10 5D172A10 (list 24) is the optional board for 5E7 and 5E8.

11 5D172A20 (list 24) is the optional board for 5E8.

Figure 1 DSU2-RAF MICROCODE ASSIGNMENTS

```
eqrap                          5ESS Switch            _
(5822)                   OFFICE DATA ADMINISTRATION
                     RECORDED ANNOUNCEMENT FUNCTION PACK

* 1. SWITCHING MODULE        005
* 2. RAF UNIT                3
# 3. APPLICATION             OSPS-DA


   PACK    6. EQSTAT      7. MICRO CODE
   1            O            5D087A10
   2            _            ________
   3            _            ________
```

Figure 2 SAMPLE EQRAP FORM 5E6 - 5E9(1) SOFTWARE RELEASES

```
eqrap                              5ESS Switch            _
(5822)                      OFFICE DATA ADMINISTRATION
                       RECORDED ANNOUNCEMENT FUNCTION PACK

* 1. SWITCHING MODULE        ___
* 2. UNIT NUMBER             _
# 3. APPLICATION             ________

   PACK    6. EQSTAT      7. MICRO CODE
   1            _            ________
   2            _            ________
   3            _            ________
```

Figure 3 SAMPLE EQRAP FORM 5E9(2) AND LATER SOFTWARE RELEASES

Copyright © 2006 Lucent Technologies

SEC. 37: 5823 RECORD
INTEGRATED SERVICES TEST FUNCTION FORM - EQISTF

1. GENERAL

The 5823 Record is available with 5E3 and later Software Releases. The DSU2 RAF Integrated Services Test Function Assignment form is used to define the ISTF (Integrated Services Test Function) unit.The EQISTF form is used to provide Loopback and Transmission testing of the Digital trunks and ISDN type DSLs (Digital Subscriber Lines).

The ISTF is a single board which mounts in the DSU2 shelf in certain predefined slot (04, 13, 08 and 17) positions. Each ISTF board is capable of handling a maximum of 3 transmission services. The number of ISTF boards required depends upon the customer's needs. The ISTF can be co-located in a service group with RAF announcements as long as there is no announcement board in the second TN1054 slot. Note that the ISTF can only be mounted in the DSU2 shelf.

Loopback and transmission circuits for ISTF services are defined on this form. However, ports are allocated to these circuits on the TRUNK forms which belong to the trunk group of "LTPISTFL" (lookpback) or "LTPISTFX" (transmission) assigned on the TKGRP form. Each TRUNK form represents one port. The sum total of Trunk Group members (TRUNK forms) with an associated TKGRP TRKCLS of "LTPISTFL" (LOOPBACK SERVICES) and "LTPISTFX" (TRANSMISSION SERVICES) cannot exceed the sum total of LOOPBACKISTF SERVICES and TRANSMISSION services indicated on the EQISTF forms.

1.1 Recent Change View

The Recent Change View for this form is 19.11.

2. FORM AND RECORD ENTRIES

2.1 BASE AND CONTROL, ESS UNIT

Enter the Base and Control Number and office name on each record.

2.2 *SWITCHING MODULE

Description: Enter the Switching Module Number.

Required Field.
Valid Entries: 1 - 192

2.3 *ISTF NUMBER

Description: Enter the ISTF Unit Number.

Required Field.
Valid Entries: 0 - 3

Data Rules:

For 5E5 and later, when this field is entered, the LOOPBACKISTF SERVICES or the TRANSMISSION field must be entered.

Copyright © 2006 Lucent Technologies

2.4 EQUIPMENT STATUS

Description: Enter the status of the equipment. For new offices and units destined for factory testing, "0" (Operational) is the only allowed value. During offline ODA database retrofits, the other values are valid.
Default: O

Required Field.
Valid Entries:

Valid EQUIPMENT STATUS Entries

Entry	Definition
O	Operational.
G	Growth.
U	Unequipped.

2.5 EQUIPMENT BAY

Description: Enter the Equipment Location Bay Number.

Required Field.
Valid Entries: 0 - 4

2.6 EQUIPMENT UNIT VERTICAL

Description: Enter the vertical equipment location that specifies the bottom of the unit. The recommended values for this are:

6-foot cabinets:
15, 24, 32, 41, 49, 58

7-foot cabinets:
22, 30, 39, 48, 56, 65, 74

Required Field.
Valid Entries: 0 - 84

2.7 EQUIPMENT AISLE

Description: Enter the equipment location aisle number. This entry consists of a floor and aisle number. The first and second digits from the left are the floor number. Valid floor numbers are 00-99. The third and fourth digits from the left is the aisle number. Valid aisle numbers are 00-99. It is recommended that floor 00 be used for equipment located in the basement per floor plan designation.

Required Field.
Valid Entries: 0000 - 9999

2.8 UNIT OFFSET

Description: The Unit Offset field is displayed on the input EQISTF input screen, but cannot be manually accessed for data entry. The value is automatically generated at the time of form entry based upon the value entered in the corresponding ISTF NUMBER field (see the chart below). The values are 04, 08, 13 and 17. The UNIT OFFSET represents the slot number in the DSU2 shelf. This data is printed on the input screen and office record for informational purposes only.

Copyright © 2006 Lucent Technologies

UNIT OFFSET Values	
ISTF NUMBER	UNIT OFFSET
0	04
1	13
2	08
3	17

2.9 CHANGE LEVEL INDICATOR

Description: Enter the Change Level Indicator number. This is a hexadecimal number value in the range of 0 - 7FFFFFFF. For valid CLI values, see Division 8, Section 1 for equipment assignment.

Required Field.
Valid Entries: 0 - 7FFFFFFF (hexadecimal)

2.10 INTF UNIT

Description: Enter the Interface Unit number. This field was added to support the 5E15 Optically Extended Control and Data Unit feature. See Division 2, Section 9V.

Required Field.
Valid Entries: 0 -8

Data Rules:

When INTF UNIT is greater than 0, it must be defined on the EQXCDU form (5853 Record) for the same Switching Module. In addition, the EQSTAT value on the EQCI must not exceed the MOD CTL SG0/1 EQSTAT on the EQXCDU form. (EQSTAT of "O" is greater than EQSTAT of "G", and EQSTAT of "G" is greater than EQSTAT of "U".)

2.11 CONTROL GROUP

Description: Enter the Control Group Number.

Required Field.
Valid Entries: 0 - 1

Data Rules:

The combination of Control Group and Control Port values must be unique for the two Service Groups.

Control Group 0, Ports 00,01 cannot be assigned, they are reserved for the local DSU.

CONTROL GROUP numbers assigned on the following forms must be defined as CI on an EQCI form: EQDCTU (5751 Record), EQDCLU (5810 Record), EQDS (5740 Record), EQDSC3 (5852 Record), EQDUP (5730-2), EQGDSC3 (5860 Record), EQIDCU (5846 Record), EQISLU (5731 Record), EQISTF (5823 Record), EQLU (5710 Record), EQPSU (5741 Record), EQRA (5821 Record), EQTU (5720 Record), EQFIU (5753 Record), EQMSU (5750 Record), EQRCLK (5723 Record). Furthermore, the EQSTAT on the matching EQCI form must be greater than or equal to the equipment status value on the equipment form (i.e., "O"' is greater than "G" which is greater than "U").

2.12 CONTROL PORT

Description: Required Field.

Copyright © 2006 Lucent Technologies

Data Rules:

The Control Group Number and Control Port Number combination must be unique for the two Service Groups.

Control Port assignments cannot be duplicated on the following forms: EQDCTU (5751 Record), EQDCLU (5810 Record), EQDS (5740 Record), EQDSC3 (5852 Record), EQDUP (5730-2), EQGDSC3 (5860 Record), EQIDCU (5846 Record), EQISLU (5731 Record), EQRISLU (5732 Record), EQISTF (5823 Record), EQLU (5710 Record), EQPSU (5741 Record), EQRA (5821 Record), EQTU (5720 Record), EQFIU (5753 Record), EQMSU (5750 Record), EQRCLK (5723 Record).

For 5E12 and later, for the EQAIU, EQIDCU, EQISLU, EQRISLU and EQPSU forms, two control ports are assigned based on the Control Port entered on the form. The first is the Control Port entered on the form, the second Control Port is one plus the Control Port entered on the form. Non-SM-2000 class processors reserve Control Group/Control Port 0/0 and 0/1 for the Local Digital Service unit. No other unit may specify Control Group/Control Port 0/0 or 0/1 for non-SM-2000 class processors. Non-SM-2000 class processors reserve Control Group/Control Port 0/0 and 0/1 for the Local Digital Service unit. No other unit may specify Control Group/Control Port 0/0 or 0/1 for non-SM-2000 class processors.

2.13 DATA GROUP

Description: Enter the data group number. Each ISTF unit requires a unique assignment of the combined Data Group/Port value per Switching Module.

Required Field.
Valid Entries: 0 - 1

Data Rules:

When this field is 1, CONTROL PORT cannot be 15.

The following forms cannot have a duplicate Data Port assignment on the same Switching Module: EQDCLU (5810 Record), EQDS (5740 Record), EQDSC3 (5852 Record), EQDUP (5730-2), EQGDSC3 (5860 Record), EQIDCU (5846 Record), EQISLU (5731 Record), EQISTF (5823 Record), EQLU (5710 Record), EQPSU (5741 Record), EQRA (5821 Record), EQTU (5720 Record).

2.14 DATA PORT

Description: Enter the Data Port Number.

Required Field.
Valid Entries: 0 - 15

2.15 LOOPBACKISTF SERVICES

Description: Enter the Number of ISTF Loopback Services required. It is recommended that the maximum value be entered in this field because each ISTF unit has a total of 32 channels (one is reserved for equipment testing) available for assignment at any one time for both the Loopback and Transmission services. The chances of encountering an equipment blockage are very low. Leave the field empty if no Loopback Services are to be assigned.
Valid Entries: 1 - 31

Data Rules:

Copyright © 2006 Lucent Technologies

For 5E9(1) and later, the sum total of Trunk Group members (TRUNK forms) with an associated TKGRP TRKCLS of "LTPISTFL" (LOOKBACK SERVICES) and "LTPISTFX" (TRANSMISSION SERVICES) cannot exceed the sum total of LOOPBACKISTF SERVICES and TRANSMISSION services indicated on the EQISTF forms.

2.16 TRANSMISSION

Description: Enter the Number of Transmission Services required. It is recommended that the maximum value be entered in this field because each ISTF unit has a total of 32 channels (one is reserved for equipment testing) available for assignment at any one time for both the Loopback and Transmission services. The chances of encountering an equipment blockage are very low. Leave the field empty if no transmission services are to be assigned.
Valid Entries: 1 - 3

Data Rules:

For 5E9(1) and later, the sum total of Trunk Group members (TRUNK forms) with an associated TKGRP TRKCLS of "LTPISTFL" (LOOKBACK SERVICES) and "LTPISTFX" (TRANSMISSION SERVICES) cannot exceed the sum total of LOOPBACKISTF SERVICES and TRANSMISSION services indicated on the EQISTF forms.

```
eqistf                          5ESS Switch            _
(5823)                    OFFICE DATA ADMINISTRATION
                      INTEGRATED SERVICES TEST FUNCTION

* 1. SWITCHING MODULE          010
* 2. ISTF NUMBER               0
  3. EQUIPMENT STATUS          O
  4. EQUIPMENT BAY             1
  5. EQUIPMENT UNIT VERTICAL   15
  6. EQUIPMENT AISLE           0125
  7. UNIT OFFSET               04
  8. CHANGE LEVEL INDICATOR    00000004
  9. CONTROL GROUP             0
 10. CONTROL PORT              03
 11. DATA GROUP                0
 12. DATA PORT                 15


 13. LOOPBACKISTF SERVICES     05
 14. TRANSMISSION              1
```

Figure 1 SAMPLE EQISTF FORM 5E14 AND EARLIER SOFTWARE RELEASES

```
eqistf                          5ESS Switch            _
                          OFFICE DATA ADMINISTRATION
(5823)                  INTEGRATED SERVICES TEST FUNCTION

 *1. SWITCHING MODULE        ___         #13. DATA PORT             __
```

```
 *2. ISTF NUMBER             _            14. LOOPBACKISTF SERVICES __
  3. EQUIPMENT STATUS        O            15. TRANSMISSION          _
 #4. EQUIPMENT BAY           _
 #5. EQUIPMENT UNIT VERTICAL __
 #6. EQUIPMENT AISLE         ____
     UNIT OFFSET             __
 #8. CHANGE LEVEL INDICATOR  ________
     INTF UNIT               0
#10. CONTROL GROUP           _
#11. CONTROL PORT            __
#12. DATA GROUP              _
```

Figure 2 SAMPLE EQISTF FORM 5E15 AND LATER SOFTWARE RELEASES

Copyright © 2006 Lucent Technologies

SEC. 38: 5814-1/2/3 RECORD TRANSMISSION RATE CONVERTER UNIT PATH FORM - EQTRCUPTH

1. GENERAL

The TRCU (Transmission Rate Control Unit) Path view is used to define the path between the host and remote TRCU for a TRCU model 1, TRCU model 2, or TRCU model 3, in the SM, SM-2000 or SM-2005 unit types . This form is effective with the 5E12 and later Software Releases. For more information, see Division 2, Section 9N.

Data Rules:
Every EQTRCUPTH form must have a corresponding EQIM form that has an IM TYPE that is set to "ORM".

For 5E15 and later, the EQCORE form (5701 Record) must be defined before the EQTRCUPTH form can be defined.

1.1 Recent Change View

The corresponding Recent Change view for this form is 17.23.

2. FORM ENTRIES

2.1 BASE AND CONTROL, ESS UNIT

Enter the Base and Control Number and Office Name on each record.

2.2 *SM

Description: The SM field is used to specify a switching module to which the TRCU is connected. The SM must be an ORM, an SM-2000 or an SM-2005.
Valid Entries: 1 - 192

2.3 *EVEN LI

Description: The EVEN LI field specifies the even-numbered TRCU path connecting the host and remote TRCU units.
Valid Entries: 0 - 22

2.4 FIRST PATH

Description: The FIRST PATH field specifies the even-numbered TRCU path connecting the host and remote TRCU units. This is a no change field.

2.5 NEXT PATH

Description: The NEXT PATH field specifies the odd-numbered TRCU next path connecting the host and remote TRCU units. This is a no change field.

2.6 HOST RMK

Description: The FIRST PATH HOST RMK field can be used to specify a brief note about the first path host

Copyright © 2006 Lucent Technologies

connection.
Valid Entries: Blank, or enter up to 49 alphanumeric characters.

2.7 REMOTE RMK

Description: The FIRST PATH REMOTE RMK field can be used to specify a brief note about the first path remote connection.
Valid Entries: Blank, or enter up to 49 alphanumeric characters.

2.8 HOST RMK

Description: The NEXT PATH HOST RMK field can be used to specify a brief note about the next path host connection.
Valid Entries: Blank, or enter up to 49 alphanumeric characters.

TRCU FIRST PATH

Data Rules:
HOST NUM and HOST TYPE entries and REMOTE NUM and REMOTE TYPE entries under TRCU FIRST PATH and TRCU NEXT PATH on the EQTRCUPTH form require corresponding entries on the EQCMTRCU form.

Navigational help:

- HOST NUM entered under TRCU FIRST PATH or TRCU NEXT PATH points to TRCU NUMBER on EQCMTRCU where SM on EQCMTRCU is zero (0). HOST TYPE entered under TRCU FIRST PATH or TRCU NEXT PATH must match TRCU TYPE on that same EQCMTRCU form.
- REMOTE NUM entered under TRCU FIRST PATH or TRCU NEXT PATH points to TRCU NUMBER on EQCMTRCU where SM on EQCMTRCU is the same as SM on EQTRCUPTH. REMOTE TYPE entered under TRCU FIRST PATH or TRCU NEXT PATH must match TRCU TYPE on that same EQCMTRCU form.

Every EQTRCUPTH form must have unique HOST NUM/HOST CKT entries under TRCU FIRST PATH and TRCU NEXT PATH.

Every EQTRCUPTH form must have unique REMOTE NUM/REMOTE CKT entries under TRCU FIRST PATH and TRCU NEXT PATH for each SM.

2.9 EVEN TCTS

Description: The EVEN TCTS field specifies the even TRCU3 control time slot number. This is a no change field.

2.10 HOST TYPE

Description: The HOST TYPE field specifies the type, or model of host TRCU (Transmission Rate Converter Unit) Host unit.
Valid Entries: TRCU, TRCU2 or TRCU3

Data Rules:

Copyright © 2006 Lucent Technologies

When any one of HOST TYPE or REMOTE TYPE under TRCU FIRST PATH or TRCU NEXT PATH is "TRCU3", all must be "TRCU3".

When HOST TYPE under TRCU FIRST PATH is "TRCU3", HOST CKT under TRCU FIRST PATH must be 0 - 2.

When HOST TYPE under TRCU FIRST PATH is "TRCU" or "TRCU2", HOST CKT under TRCU FIRST PATH must be 0 or 2.

When HOST TYPE under TRCU FIRST PATH is "TRCU" or "TRCU2", REMOTE CKT under TRCU FIRST PATH must be 0 or 2.

When HOST TYPE under TRCU FIRST PATH is "TRCU" or "TRCU2", HOST CKT under TRCU NEXT PATH must be 1 or 3.

When HOST TYPE under TRCU FIRST PATH is "TRCU" or "TRCU2", REMOTE CKT under TRCU NEXT PATH must be 1 or 3.

When HOST TYPE under TRCU FIRST PATH is "TRCU" or "TRCU2" and HOST CKT under, TRCU FIRST PATH is 0, HOST CKT under TRCU NEXT PATH must be 1.

When HOST TYPE under TRCU FIRST PATH is "TRCU" or "TRCU2" and HOST CKT under, TRCU FIRST PATH is 2, HOST CKT under TRCU NEXT PATH must be 3.

When HOST TYPE under TRCU FIRST PATH is "TRCU" or "TRCU2" and REMOTE CKT under, TRCU FIRST PATH is 0, REMOTE CKT under TRCU NEXT PATH must be 1.

When HOST TYPE under TRCU FIRST PATH is "TRCU" or "TRCU2" and REMOTE CKT under, TRCU FIRST PATH is 2, REMOTE CKT under TRCU NEXT PATH must be 3.

When HOST TYPE is "TRCU3", TIME MULTIPLEX SWITCH CLI on the EQCORE form must not be set to 20 hex.

When HOST TYPE is "TRCU3", the CLI value on the EQTMS form must not be 20.

2.11 HOST CLI

Description: The HOST CLI field is used to specify the change level indicator associated with the host TRCU first path.
Valid Entries: Enter hexadecimal 0 to 7FFFFFFF.

See Division 8, Section 1, for CLI values.

2.12 HOST NUM

Description: The HOST NUM field is used to specify the TRCU first path host TRCU unit number.
Valid Entries: 1 - 96

Data Rules:

When HOST NUM under TRCU FIRST PATH and TRCU NEXT PATH are equal, HOST TYPE under TRCU FIRST PATH and TRCU NEXT PATH must be of the same type.

Copyright © 2006 Lucent Technologies

HOST NUM and HOST CKT combinations under TRCU FIRST PATH and TRCU NEXT PATH must be unique.

2.13 HOST CKT

Description: The HOST CKT field is used to specify the TRCU first path host TRCU circuit number.
Valid Entries: 0-3

2.14 REMOTE TYPE

Description: The REMOTE TYPE field specifies the type, or model of remote TRCU unit.
Valid Entries: TRCU, TRCU2 or TRCU3

Data Rules:

When REMOTE TYPE under TRCU FIRST PATH is "TRCU3", REMOTE NUM under TRCU FIRST PATH must be 1 or 7 - 14, or 254 for null unit.

When REMOTE TYPE under TRCU FIRST PATH is "TRCU3", REMOTE CKT under TRCU FIRST PATH must be 0 - 2.

When REMOTE TYPE under TRCU FIRST PATH is "TRCU" or "TRCU2", REMOTE NUM under TRCU FIRST PATH must be 1 - 6, or 254 for null unit.

2.15 REMOTE CLI

Description: The REMOTE CLI field is used to specify the change level indicator associated with the TRCU first path.
Valid Entries: Valid values are blank or hexadecimal 0 to 7FFFFFFF.

See Division 8, Section 1, for CLI values.

2.16 REMOTE NUM

Description: The REMOTE NUM field is used to specify the TRCU first path TRCU unit number.
Valid Entries: 1 - 14

Data Rules:

When REMOTE NUM under TRCU FIRST PATH and TRCU NEXT PATH are equal, REMOTE TYPE under TRCU FIRST PATH and TRCU NEXT PATH must be of the same type.

REMOTE NUM and REMOTE CKT combinations under TRCU FIRST PATH and TRCU NEXT PATH must be unique.

2.17 REMOTE CKT

Description: The REMOTE CKT field is used to specify the TRCU first path remote TRCU circuit number.
Valid Entries: 0 - 3

TRCU NEXT PATH

2.18 ODD TCTS

Copyright © 2006 Lucent Technologies

Description: The ODD TCTS field specifies the odd TRCU3 control time slot number. This is a no change field.

2.19 HOST TYPE

Description: The HOST TYPE field specifies the type, or model of host TRCU unit.
Valid Entries: TRCU, TRCU2 or TRCU3

Data Rules:

When HOST TYPE under TRCU NEXT PATH is "TRCU3", HOST CKT under TRCU NEXT PATH must be 0 - 2.

When HOST TYPE under TRCU NEXT PATH is "TRCU" or "TRCU2", HOST CKT under TRCU NEXT PATH must be 1 or 3.

2.20 HOST CLI

Description: The HOST CLI field is used to specify the change level indicator associated with the host TRCU next path.
Valid Entries: Valid values are blank or hexadecimal 0 to 7FFFFFFF.

See Division 8, Section 1, for CLI values.

2.21 HOST NUM

Description: The HOST NUM field is used to specify the TRCU next path host TRCU unit number.
Valid Entries: 1 - 96

2.22 HOST CKT

Description: The HOST CKT field is used to specify the TRCU next path host TRCU circuit number.
Valid Entries: 0 - 3

2.23 REMOTE TYPE

Description: The REMOTE TYPE field specifies the type, or model of remote TRCU unit.
Valid Entries: TRCU, TRCU2, or TRCU3

Data Rules:

When REMOTE TYPE under TRCU NEXT PATH is "TRCU3", REMOTE NUM under TRCU NEXT PATH must be 1 or 7 - 14, or 254 for null unit.

When REMOTE TYPE under TRCU NEXT PATH is "TRCU3", REMOTE CKT under TRCU NEXT PATH must be 0 - 2.

When REMOTE TYPE under TRCU NEXT PATH is "TRCU" or "TRCU2", REMOTE NUM under TRCU NEXT PATH must be 1 - 6, or 254 for null unit.

2.24 REMOTE CLI

Description: The REMOTE CLI field is used to specify the change level indicator associated with the TRCU

Copyright © 2006 Lucent Technologies

next path.
Valid Entries: Valid values are blank or hexadecimal 0 to 7FFFFFFF.

See Division 8, Section 1, for CLI values.

2.25 REMOTE NUM

Description: The REMOTE NUM field is used to specify the TRCU next path TRCU unit number.
Valid Entries: 1 - 96

2.26 REMOTE CKT

Description: The REMOTE CKT field is used to specify the TRCU next path remote TRCU circuit number.
Valid Entries: 0 - 3

```
eqtrcupth                          5ESS Switch
SCREEN 1 OF 2             OFFICE DATA ADMINISTRATION
(5814)           TRANSMISSION RATE CONVERTER UNIT (TRCU) PATH

*1. SM         ___
*2. EVEN LI    __
    FIRST PATH __
    NEXT PATH  __

                            FIRST PATH
 5. HOST RMK   ____________________________________________________
 6. REMOTE RMK ____________________________________________________

                            NEXT PATH
 7. HOST RMK   ____________________________________________________
 8. REMOTE RMK ____________________________________________________
```

```
eqtrcupth                          5ESS Switch            _
SCREEN 2 OF 2             OFFICE DATA ADMINISTRATION
(5814)           TRANSMISSION RATE CONVERTER UNIT (TRCU) PATH

     TRCU FIRST PATH                TRCU NEXT PATH
     EVEN TCTS   ___               ODD TCTS    ___
#10. HOST TYPE   _____       #19. HOST TYPE   _____
#11. HOST CLI    ________    #20. HOST CLI    ________
#12. HOST NUM    ___         #21. HOST NUM    ___
#13. HOST CKT    _           #22. HOST CKT    _
#14. REMOTE TYPE _____       #23. REMOTE TYPE _____
#15. REMOTE CLI  ________    #24. REMOTE CLI  ________
#16. REMOTE NUM  ___         #25. REMOTE NUM  ___
#17. REMOTE CKT  _           #26. REMOTE CKT  _
```

Figure 1 SAMPLE TRANSMISSION RATE CONVERTER UNIT PATH FORM 5E12 AND LATER SOFTWARE RELEASES

Copyright © 2006 Lucent Technologies

SEC. 42: 5840, 5840-1, 5840A RECORD
SCAN POINT NUMBER ASSIGNMENT RECORD
DUPLICATE SPN ASSIGNMENTS RECORD
CIRCUIT SPN ASSIGNMENT RECORD

1. GENERAL

1.1 Scan Point Number Assignment Record

The Scan Point Number Assignment Record (5840 Record) is generated from a combination of many ODA input forms and defines all the possible or available scan points that are defined as operational on the EQMSP or EQMMSP ODA input forms. This record also reflects the peripheral unit, trunk or line customer that any particular SPN is assigned to.

1.2 Duplicate SPN Assignments Record

The Duplicate SPN Assignments Record (5840-1 Record) defines the operational scan points that are assigned to the Multiple Carrier Group Alarm or Make Busy key customers. It is generated when specific SPN assignments are duplicated on the LINE, MLHLN or TRUNK ODA input forms.

1.3 Circuit SPN Assignment Record

The Circuit SPN Assignment Record (5840A Record) reformats and re-sorts the information that is defined on the 5840 Record. This format is used by installation for crossconnect definitions. The 5840A Record is sorted in order of circuit type and circuit reference number. Unassigned scan points are not presented.

2. ENTRIES - 5840 RECORD

2.1 BASE AND CONTROL, ESS UNIT

Enter the Base and Control Number and the office name on each record.

2.2 SM

Description: The Switching Module Number.
Valid Entries: 1 - 192

2.3 MSU

Description: The Regular or Modular Metallic Service Unit Number.
Valid Entries: 0 - 1

2.4 SG

Description: The Service Group Number.
Valid Entries: 0 - 1

2.5 PACK POSITION

Description: The Metallic Service Unit Pack Position Number.
Valid Entries:

Copyright © 2006 Lucent Technologies

Regular MSU: 00 - 15
Modular MSU: 00 - 31

2.6 SCAN POINT

Description: The Scan Point Number.

SPN (Scan Point) 31 is reserved for current sensing and is not available for assignment purposes. It will always have a circuit type of DNA (Do Not Assign).
Valid Entries: 00 - 30

2.7 CIRCUIT TYPE

Description: A unique identifier which reflects the ODA input form or customer assigned to the particular Scan Point. There are three types that allow duplicate assignments for the same Scan Point. These valid duplications are Trunk Carrier Group Alarms, Line and MLHG Carrier Group Alarms and Individual Make Busy keys of a given MLHG. These three instances require the supplementary 5840-1 Record to provide the unique form identifiers (key fields) of all the duplicates.

Valid CIRCUIT TYPE Entries

Entry	Definition
LINE CGA	A unique Carrier Group Alarm associated with an analog line defined on the LINE input form. The line must be equipped with a LEN.
MLHG CGA	A unique Carrier Group Alarm associated with a member of a Multi-Line Hunt Group on the MLHLN input form. The member must be equipped with a LEN.
TRUNK CGA	A unique Carrier Group Alarm associated with an analog trunk member on the TRUNK input form.
MULT CGA	This Carrier Group Alarm SPN is duplicated on either the TRUNK form or on the LINE/MLHLN forms. Refer to 5840-1 for complete assignments. May be duplicated up to 24 times.
MISC	Scan Point associated with a general or miscellaneous alarm. The Scan Point is assigned on the MSUSP Form (5530 Record).
PROTOCOL	Fixed Scan Point for the Protocol Circuit which is associated with Metallic Access Packs located on a Regular Metallic Service Unit. Assigned to Point 00 of the SCAN pack located in the lowest Pack Position on the MSU. The SCAN Packs are assigned on the EQMSP form.
MKBYKEY	A unique Individual Make Busy key SPN value that is assigned to either a unique LINE form or a unique MLHLN form (Member of a Multi-Line Hunt Group).
MULT	This Individual Make Busy key has been validly duplicated on a maximum of 32 members of the particular Multi-Line Hunt Group on the MLHLN form. Refer to 5840-1 for assignments.
SPHTKEY	A unique Stop Hunt key associated with a member of a Multi-Line Hunt Group assigned on the MLHLN form.
GRPBSYKEY	A unique Group Make busy Key associated with a particular Multi-Line Hunt Group assigned on the MLHG form.
R13A	13A Recorded Announcement circuit assigned on the MSUSP Form (5530 Record). One unique SPN is required for each equipped Message Module (maximum of eight Message Modules per R13A Unit).
DNA	Do Not Assign. Point 31 of each equipped Scan Pack is reserved and not available for assignment.
TBCU	A unique Scan Point associated with the Test Bus Control Unit and assigned on the EQTBCU input form, one required for each unit. This point is associated with the SLC-96 Remote Terminals.
REM ALM	Remote Alarm Scan Points defined on the EQMSU input form and associated with RSMs (Remote Switching Modules). Two entire scan boards per Service Group of one MSU (Regular or Modular) are reserved for RSM alarms. Refer to RALM input form for specific Alarm SPN assignments on the RSM/Scan Board.
FTRKEY	A unique feature key SPN value that is assigned to a unique FTRKEY Form. It can turn on or

Copyright © 2006 Lucent Technologies

	off any BRCS Call Forwarding or IDP feature.
POSMKBUSY	A unique Position Make Busy SPN value associated with a particular Multi-Line Hunt Group and position assigned on the MUPHKEY Form. It is assigned when Hunt Type equals "MUPH" on the MLHGFD Form.
BDOC PWR	Scan Point associated with Broadcast Dynamic Overload Control power. The Scan Point is assigned on the MSUSP Form.
MSU PWR	Scan Point associated with an MSU Power alarm. The Scan Point is assigned on the MSUSP Form.
NMF PWR	Scan Point associated with Network Management frame power alarm. The Scan point is assigned on the MSUSP Form.
CSD MKBYKEY	Software Release: 5E5 and earlier. A unique individual Circuit Switch Data Make Busy Key SPN that is assigned on a DSMLHLN or DSLUSR form.
CSD MBR MKB	Software Release: 5E6 and later. A unique individual Circuit Switch Data Make Busy Key SPN that is assigned on a DSLUSR form.
MULT CSD BSY KEY	Software Release: 5E5 and earlier. This individual Circuit Switch Data Make Busy Key has been validly duplicated on a maximum of 32 members of the particular Circuit Multi-Line Hunt Group on the DSMLHLN or DSLUSR form. Refer to the 5840-1 record for assignments.
MULT CSD RND MKB	Software Release: 5E6 and later. This individual Circuit Switch Data Make Busy Key has been validly duplicated on a maximum of 32 members of the particular Circuit Multi-Line Hunt Group on the DSLUSR form. Refer to the 5840-1 record forassignments.
CSD SHPTKEY	A unique Circuit Switch Data Stop Hunt Key associated with a member of a Circuit Multi-Line Hunt Group assigned on the DSMLHLN or DSLUSR form.

2.8 CIRCUIT REFERENCE NUMBER

Description: The unique identifier that corresponds to the key value of the input form that the Scan Point is assigned on.

Valid CIRCUIT REFERENCE NUMBER Entries

CIRCUIT TYPE	CIRCUIT REFERENCE NUMBER
LINE CGA	TN: 7-digit Telephone Number assigned on LINE input form that is associated with a unique Carrier Group Alarm SPN.
MLHG CGA	MLHG: Multi-Line Hunt Group Number, MEMB: Multi-Line Hunt Group Member Number which are assigned on the MLHLN input form and associated with a unique Carrier Group Alarm SPN.
TRUNK CGA	TGN: Trunk Group Number, MEMB: Trunk Group Member Number which are assigned on the TRUNK input form and associated with a unique Carrier Group Alarm SPN.
MULT CGA	Refer to 5840-1 Record for unique identifiers associated with duplicated CGA SPNS.
MISC CGA	Scan point as defined on the CGASP form: MJOP - Major Alarm point normally open MJCL - Major Alarm point normally closed MNOP - Minor Alarm point normally open MNCL - Minor Alarm point normally closed.
MISC	Scan Point as defined on the MSUSP Form: MJOP - Major Alarm Scan Point normally open. MJCL - Major Alarm Scan Point normally closed. MNOP - Minor Alarm Scan Point normally open. MNCL - Minor Alarm Scan Point normally closed.
PROTOCOL	Leave blank.
MKBYKEY	If the Make Busy key is associated with a unique SPN on the LINE input form, enter TN: 7-digit Telephone Number. If the Make Busy key is associated with a unique SPN on the MLHLN input form, enter MLHG: Multi-Line Hunt Group Number, MEMB: Multi-Line Hunt

Copyright © 2006 Lucent Technologies

	Group Member Number.
MULT BSY KEY	Refer to 5840-1 Record for unique identifiers associated with duplicated Make Busy keys in a Multi-Line Hunt Group.
SPHTKEY	MLHG: Multi-Line Hunt Group Number, MEMB: Multi-Line Hunt Group Member Number which are assigned on the MLHLN input form and associated with a unique Stop Hunt key SPN.
GRPBSYKEY	MLHG: Multi-Line Hunt Group Number assigned on the MLHG input form and associated with a unique Group Make Busy key SPN.
13RA	Refer to EQSPN input form.
R13A	Refer to MSUSP Form.
DNA	Reserved point.
TBCU	MTB: Metallic Test Bus key assigned on EQTBCU input form associated with a unique Test Bus Control SPN for SLC-96 testing.
REM ALM	SCANBD 0 if the SPN assigned to Remote Alarm Scan Board 0 on the EQMSU input form. SCAN BD 1 if the SPN is assigned to Remote Alarm Scan Board 1 on the EQMSU input form.
FTRKEY	Leave blank - SPN is key to the form.
POSMKBUSY	Dual keys assigned on MUPHKEY input form: MLHG - Multi-Line Hunt Group Number 1 - 2000 MLPOS - Position of the console 1-16.
BDOC PWR	Refer to MSUSP input form.
MSU PWR	Refer to MSUSP input form.
NMF PWR	Refer to MSUSP input form.
CSD MKBYKEY	If the Circuit Switch Data Make Busy Key is associated with a unique SPN that is assigned on a DSMLHLN or DSLUSR form, enter: CKT MLHG/TERM: Circuit Multi-Line Hunt Group/Member PKT MLHG/TERM: Packet Multi-Line Hunt Group/Member.
MULT CSD BSY KEY	Refer to the 5840-1 record for unique identifiers associated with duplicated Circuit Switch Data Make Busy Keys in a Circuit Multi-Line Hunt Group.
CSD SPHTKEY	CKT MLHG/TERM: Circuit Multi-Line Hunt Group/Member PKT MLHG/TERM: Packet Multi-Line Hunt Group/Member. Which are assigned on the DSMLHLN or DSLUSR form and associated with a unique Circuit Switch Data Stop Hunt Key SPN.

3. ENTRIES - 5840-1 RECORD

3.1 GENERAL

The 5840-1 Record displays duplicate scan point information assigned to CGA (Carrier Group Alarms) and MLHG (Multi-Line Hunt Group) Member Make Busy and Random Make Busy keys. SPNs with duplicate assignments are initially captured on the 5840 Record. Circuit Type Mult CGA defines TRUNK and LINE/MLHLN form duplications. Circuit Type MULT RND MKB defines MLHLN Member Make Busy key duplications.

3.2 BASE AND CONTROL ESS UNIT

Enter the Base and Control Number and the office name on each record.

3.3 SM

Description: The Switching Module Number.
Valid Entries: 1 - 192

3.4 MSU

Description: The Regular or Modular Metallic Service Unit Number.

Copyright © 2006 Lucent Technologies

Valid Entries: 0 - 1

3.5 SG

Description: The Service Group Number.
Valid Entries: 0 - 1

3.6 PACK POSITION

Description: The Metallic Service Unit "SCAN" Pack position as defined on the EQMSP or EQMMSP form.
Valid Entries:
00 - 15 for Regular MSU
00 - 31 for Modular MSU

3.7 SCAN POINT

Description: The Scan Point Number that has been multiply assigned.
Valid Entries: 00 - 30

3.8 NUMBER

Description: This field uses a fixed value of 01-32. Up to 24 trunks or lines may share the same Carrier Group Alarm SPN. Up to 32 MLHG Members in the same Multi-Line Hunt Group may share the same Member Make Busy key SPN. Up to 2015 MLHG Members may share the same Random Make Busy key SPN.

3.9 CIRCUIT TYPE

Description: A unique identifier that reflects the ODA input form the SPN is assigned to. The types are directly related to the 5840 Record based on the shared SPN value. Valid circuit type names for the duplicate SPNs associated with office record 5840:

Valid CIRCUIT TYPE Entries

5840	5840-1
MULT CGA and SPN duplication on the trunk. CGASPN	TRUNK CGA - Carrier Group Alarm SPN is duplicated on 2 - 24 trunk input form.
MULT CGA and SPN duplication on the line. CCGASPN	LINE CGA - Carrier Group Alarm SPN is duplicated on 2 - 24 LINE and/or MLHLN Input forms. This is one of the LINE duplicates.
MULT CGA and SPN duplication on the MLHLN. CGASPN	MLHG CGA - Carrier Group Alarm SPN is duplicated on 2 - 24 LINE and/or MLHLN input forms. This is one of the MLHLN duplicates.
MULT BSY KEY SPN duplication on the MLHLN MKBYKEY	MAKEBSYKEY - Individual Member Make Busy key SPN is duplicated on 2 - 32 MLHLN input forms with common MLHG value.
MULT MBR MKB duplication on the MLHLN. MKBYKEY	MBR MKB - Individual Member Make Busy key SPN is duplicated on 2 - 32 MLHLN input forms with common MLHG value.
MULT RND MKB duplication on the MLHLN form RNDMKB	RND MKB - Individual Random Make Busy key SPN is duplicated on 2 - 32 MLHLN input forms with common MLHG value.
MULT CSD MBR MKB duplication on the DSLUSR form. MKBYKEY	CSD MBR MKB Individual Member Make Busy key is duplicated up to 2015 Circuit Multi-Line Hunt Group members in the same Circuit Multi-Line Hunt group.
MULT CSD RND MKB duplication on the DSLUSR form. RNDMKB	CSD RND MKB - Individual Random Make Busy Key is duplicated up to 2015 Circuit Multi-Line Hunt Group in the same Circuit Multi-Line Hunt group.

3.10 ASSIGNED TO KEY

Description: The unique identifier or key that corresponds to the input form key that the SPN is assigned on.

Copyright © 2006 Lucent Technologies

Valid ASSIGNED TO KEY Entries	
5840-1 CIRCUIT TYPE	**ASSIGNED TO KEY**
TRUNK CGA	
LINE CGA	TN: 7-digit Telephone Number assigned on the LINE input form.
MLHG CGA	MLHG: Multi-Line Hunt Group Number, MEMB: Multi-Line Hunt Group Member Number assigned on the MLHLN form.
RND MKB	Software Release 5E6 and later. MLHG: Multi-Line Hunt Group Number. MEMB: Multi_Line Hunt Group Member Number which are assigned on the MLHLN input form and associated with a unique Key SPN.
CSD RND MKB KEY	Software Release: 5E6 and later. CKT MLHG/TERM: Circuit Multi-Line Hung Group/Member. PKT MLHG/TERM: Packet Multi-Line Hunt Group/Member. Which are assigned on the DSMLHLN or DSLUSR form and associated with a unique Circuit Switch Data Random Make Busy Key SPN.
MAKE BUSY KEY	Software Release: 5E5 and earlier. MLHG: Multi-Line Hunt Group Number MEMB: Multi-Line Hunt Group Member Number assigned on the MLHLN form.
MBR MKB	Software Release: 5E6 and later. MLHG: Multi-Line Hunt Group Number MEMB: Multi-Line Hunt Group Member Number assigned on the MLHLN form. Previously called MAKE BUSY KEY.
CSD MAKE BUSY KEY	Software Release: 5E5 and earlier. CKT MLHG/TERM: Circuit Multi-Line Hunt Group/Member assigned on the DSMLHLN or DSLUSR form. PKT MLHG/TERM: Packet Multi-Line Hunt Group/Member assigned on the DSMLHLN or DSLUSR form.
CSD MBR MAKE BUSY KEY	Software Release: 5E6 and later. CKT MLHG/TERM: Circuit Multi-Line Hunt Group/Member assigned on the DSMLHLN or DSLUSR form. PKT MLHG/TERM: Packet Multi-Line Hunt Group/Member assigned on the DSMLHLN or DSLUSR form. This Key replaces "CSD MAKE BUSY KEY".

4. ENTRIES - 5840A RECORD

Office Record 5840A reformats and re-sorts the same information that is defined on the 5840 Record. This format is used by installation for crossconnect definitions. Only the assigned scan points are to be shown.

This record is sorted by Circuit Type and Circuit Reference Number combination. The Scan Point Number (SPN) is defined as (SM, MSU, SG, Pack Position, Pack Number) and may be duplicated for certain Circuit Types.

Copyright © 2006 Lucent Technologies

SEC. 43: 5841 RECORD
DISTRIBUTE POINT NUMBER ASSIGNMENT RECORD

1. GENERAL

The 5841 Record is available with 5E9 and later Software Releases.

The Distribute Point Number Assignment Record identifies all the possible or available distribute points that are defined as operational on either the EQDPN, EQMSP, EQMMSP, EQTBCU, RALM, PGTC, EQRCLK, LINE, MLHG, MLHLN, TLWS, TRUNK, PFASFG, or TKGRP ODA input forms.

1.1 Recent Change View

This form is not associated with a Recent Change View.

2. FORM AND RECORD ENTRIES

2.1 BASE AND CONTROL GROUP, ESS UNIT

Enter the Base and Control Number and the office name on each record.

2.2 SM

Description: This field defines the Switching Module Number.

Required Field: Valid Entries: 1 - 192

2.3 MSU

Description: This field defines the Regular or Modular Metallic Service Unit Number.
Valid Entries: 0 - 1

2.4 SG

Description: This field defines the Service Group Number.
Valid Entries: 0 - 1

2.5 PACK POSITION

Description: This field defines the Metallic Service Unit Pack Position Number.
Valid Entries:
00-15 for Regular MSU
00-31 for Modular MSU

2.6 DISTRIBUTE POINT

Description: This field defines the Distribute Point Number.
Valid Entries: 0 - 31

2.7 CIRCUIT TYPE

Copyright © 2006 Lucent Technologies

Description: This field is a unique identifier that defines the type of circuit the distribute point is assigned.

Valid CIRCUIT TYPE Entries

Entry	Definition
PROTOCOL	Five fixed Distribute Points associated with one or more MACC (Metallic Access) packs on a regular MSU (Metallic Service Unit). Assigned to points 00-04 of the DIST pack located in the lowest pack position on the MSU. The DIST packs are assigned on the EQMSP form.
MSGREG	Message Register distribute points assigned on the line and MLHLN (Multi-Line Hunt Line) forms.
SLVLDCKT	Sleeve Lead Circuit distribute points assigned on the line and MLHLN (Multi-Line Hunt Line) forms.
OVFMSGREG	Overflow Message Register distribute points assigned on the MLHG (Multi-Line Hunt Group) form.
JK1CUTTHRU	DC Jack 1 Cut Thru distribute point assigned on the TLWS(Trunk Line Work Station) form.
JK1DIODE	DC Jack 1 Diode distribute point assigned on the TLWS form.
JK2CUTTHRU	DC Jack 2 Cut Thru distribute point assigned on the TLWS form.
JK2DIODE	DC Jack 2 Diode distribute point assigned on the TLWS form.
DTDA	Dial Tone Delay Alarm circuits require two distribute points for 5E1
BTBDIST1	One of two distribute points required for Office-to-Office Trunk Testing and assigned on the TRUNK form.
BTBDIST2	One of two distribute points required for Office-to-Office Trunk Testing and assigned on the TRUNK form.
OTODPN1	One of two distribute points required for Office-to-Office Trunk Testing and assigned on the TRUNK form. Valid for 5E9 and later Software Releases.
OTODPN2	One of two distribute points required for Office-to-Office Trunk Testing and assigned on the TRUNK form. Valid for 5E9 and later Software Releases.
REM	Remote Alarm for RSM require 16 fixed assigned distribute points 00-15 specified on the EQMSU form.
TBCU	A Test Bus Control Unit requires 5 distribute points.

2.8 CIRCUIT REFERENCE NUMBER

Description: This field defines the unique identifier that corresponds to a key value of the input form that the distribute point is assigned.

Valid CIRCUIT REFERENCE NUMBER Entries

CIRCUIT TYPE	CIRCUIT REFERENCE NUMBER
PROTOCOL	Leave blank.
MSGREG	If the Message Register is associated with a unique DPN on the line form enter LINE: and the 7-digit Telephone Number. If the Message Register is associated with a unique DPN on the Multi-Line Hunt member form enter MLHLN: Multi-Line Hunt Group
SLVLDCKT	If the Sleeve Lead is associated with a unique DPN on the line form enter LINE: and the 7-digit Telephone Number. If the Sleeve Lead is associated with a unique DPN on the Multi-Line Hunt member form enter MLHLN: Multi-Line Hunt Group
REM	Enter "DIST BD:" signifying one of the Remote Alarm Distribute Point assignments from the EQMSU input form.
TBCU	Enter "MTB:" the Metallic Test Bus assigned on the EQTBCU input form
TBCU	Enter "MTB:" the Metallic Test Bus assigned on the EQTBCU input form
TBCU	Defines the "MTB:" the Metallic Test Bus assigned on the EQTBCU input form
OVFMSREG	Defines the "MLHG:" and the associated Multi-Line Hunt Group Number.
JK1CUTTHRU	Defines the "TLWS:" and the associated workstation number.
JK1DIODE	Defines the "TLWS:" and the associated workstation number.
JK2CUTTHRU	Defines the "TLWS:" and the associated workstation number.
JK2DIODE	Defines the "TLWS:" and the associated workstation number.
DTDA	Defines the "EQDPN:" and the assigned circuit lead designation.
BTBDIST1	Defines the "TGN:"
BTBDIST2	Defines the "TGN:"
OTODPN1	Defines the "TGN:" the Trunk Group Number from the TRUNK form
OTODPN2	Defines the "TGN:"
TBCU	Defines the "MTB:" the Metallic Test Bus assigned on the EQTBCU input form
TBCU	Defines the "MTB:" the Metallic Test Bus assigned on the EQTBCU input form

Copyright © 2006 Lucent Technologies

SEC. 44: 5842, 5842A RECORD
METALLIC TEST BUS ASSIGNMENT RECORD
CIRCUIT MTB ASSIGNMENT RECORD

1. GENERAL

The 5842 and 5842A Records are output only records available with 5E2 and later Software Releases.

The Metallic Test Bus Assignment Record (5842 Record) identifies all Metallic Test Bus points that are defined as operational on either the EQMSP or EQMMSP forms. Each MACC (metallic access) pack defines 16 possible metallic access points which are printed on one page of the 5842 Record.

Each of the 16 metallic access points made operational by a MACC pack may be assigned to one of many peripheral type units. The 5842 Record shows the peripheral unit, trunk, or line associated with each MTB (Metallic Test Bus) assignment.

The Circuit MTB Assignment 5842A Record reformats and re-sorts the information defined on the 5842 Record. The 5842A is sorted in order of circuit type and circuit reference number.

2. ENTRIES - 5842 RECORD

2.1 BASE AND CONTROL, ESS UNIT

The Base and Control Number and the office name.

2.2 SM

Description: The Switching Module number.
Valid Entries: 1 - 127.

2.3 MSU

Description: The Regular or Modular Metallic Service Unit number.
Valid Entries: 0 - 1

2.4 SG

Description: The Service Group number.
Valid Entries: 0 - 1

2.5 PACK POSITION

Description: The Metallic Service Unit Pack Position number.

Valid entries are:
For Regular MSU: 00-15
For Modular MSU: 00-31

2.6 BUS POINT

Description: The MTB (Metallic Test Bus) point number.

Copyright © 2006 Lucent Technologies

Valid Entries: 00 - 16

2.7 CIRCUIT TYPE

Description: A unique identifier that defines the type of circuit the MTB point is assigned.

Valid CIRCUIT TYPE Entries

Entry	Definition
DMTB PROTOCOL	Dedicated Metallic Test Bus Protocol. The reserve DMTB Protocol circuit assignment is point 15 on every MACC (Metallic Access) pack in a Regular or Modular MSU.
DCJK1	Direct Current Jack 1 MTB assignment is specified on the TLWS (Trunk Line Work Station) form.
DCJK2	Direct Current Jack 2 MTB assignment is specified on the TLWS (Trunk Line Work Station) form.
ISMAN	Software Release: 5E3 and later. Two MAN (Metallic Access Network) MTB point assignments are specified on the Integrated Services Analog Pack Equipage form, EQISAP (5824 Record).
LTDTST	Four Local Test Desk Test Trunk MTB point assignments are specified on the Trunk Unit Equipment form, EQTUP.
LU	Two Line Unit MTB point assignments are specified on the Line Unit Equipage form, EQLU.
NTTU	Two No Test Trunk Unit MTB point assignments are specified on the Trunk form, TRUNK.
PGTC	Two MTB point assignments are specified on the Pair Gain Test Controller Form, PGTC (5503 Record).
PMU	Four MTB point assignments are required for PMU (Precision Measurement Unit) and are specified on the Precision Measurement Unit form, EQPMU.
TBCU	The MTB point assignment on the Test Bus Control Unit form, EQTBCU, corresponds to a SLC-96 Remote Terminal specified on the SLC-96 Remote Terminal form, SLCRT.
TU	One Trunk Unit MTB point assignment is specified on the Trunk Unit Equipage form, EQTU.

2.8 CIRCUIT REFERENCE NUMBER

Description: The unique identifier that corresponds to a key value on the input form that the Metallic Test Bus point is assigned. Valid entries for the CIRCUIT REFERENCE NUMBER are dependent on the circuit type as shown in the following table.

Valid CIRCUIT REFERENCE NUMBER Entries

CIRCUIT TYPE	CIRCUIT REFERENCE NUMBER
DMTB PROTOCOL	Blank.
DCJK1	"TLWS:" work station number, "DEVID:" device identifier from the TLWS form.
DCJK2	"TLWS:" work station number, "DEVID:" device identifier from the TLWS form.
ISMAN	Software Release: 5E3 and later. "IM:" the Switching Module, "TYPE:" the Switching Module type, "ISLU:" the Integrated Services Line Unit number, "PKTYPE:" the Integrated Services analog circuit pack type, "PACK:" the Integrated Services analog circuit pack position number assigned on the EQISAP form.
LTDTST	"SM:" the Switching Module, "TU:" the trunk unit, "SG:" the service group, "PACK" the pack position number for test 0 MTB 0, or test 0 MTB 1, or test 1 MTB 0 and test 1 MTB 1 assigned on the EQTUP form.
LU	"SM:" the Switching Module, "LU:" the Line Unit, "SG:" the service group number from the LINE form.
NTTU	"TGN:" trunk group number. "MEMB:" trunk group member number.

Copyright © 2006 Lucent Technologies

	"DEN:" digital equipment number. "NEN:" network equipment number.
PGTC	"PGTC:" the Pair Gain Test Controller frame number, or "PGTCTRK:" the Pair Gain Test Controller trunk number assigned on the PGTC form.
PMU	"SM:" the Switching Module, "PMU:" the precision measurement unit, "MTB: 0" or "MTB: 1" or "MTB: 2" or "MTB: 3" for the MTB assignment on the EQPMU form.
TBCU	"SM:" the Switching Module, "DCLU:" the digital carrier line unit, "RT:" the remote terminal assigned on the SLCRT form.
TU	"SM:" the Switching Module, "TU:" the trunk unit, "SG:" the service group number from the EQTU form.

3. ENTRIES - 5842A RECORD

The CIRCUIT MTB ASSIGNMENT RECORD (5842A Record) reformats and re-sorts the same information that is defined on the 5842 Record. This format is used by installation for crossconnect definitions.

This record is sorted by CIRCUIT TYPE and CIRCUIT REFERENCE NUMBER combination. The MTB (Metallic Test Bus) Point Number is defined as SM, MSU, SG, pack position, and point number for all circuit types.

Copyright © 2006 Lucent Technologies

SEC. 45: 5843 RECORD
CONTROL, DATA AND FACILITY PORT ASSIGNMENT RECORD

1. GENERAL

The 5843 Record is an output-only record which displays the Control Port Assignments, Data Port Assignments, and Facility Port Assignments. Control Port and Data Port Assignments are defined for all Software Releases. These port assignments should be identified for each SM (Switching Module).

CONTROL PORT ASSIGNMENTS

1.1 BASE AND CONTROL, ESS UNIT

Description: Displays the Base and Control Number and the Office Name.

1.2 SM

Description: This is the Switching Module number from the EQIM form.

Valid Values: 1 - 192

1.3 CG0 and CG1

Description: These two columns display the port numbers of Control Group 0 and Control Group 1 (if equipped).

Valid Values: 0 - 22

1.4 UNIT TYPE

Description: These columns display the type of unit assigned to the port. The valid Unit Types are as follows:

Valid UNIT TYP Entries

Entry	Definition
DCLU	Digital Carrier Line Unit.
DCTU	Directly Connected Test Unit.
DLTU	Digital Line/Trunk Unit.
DSU	Digital Service Unit.
FIU	Facility Interface Unit.
IDCU	Software Release: 5E8 and later. Integrated Digital Carrier Unit.
ISLU	Integrated Services Line Unit.
ISTF	Integrated Services Test Function.
LU	Line Unit.
MSU	Metallic Service Unit.
PSU	Packet Switching Unit.1
RAF	Recorded Announcement Function Unit.
RCLK	Remote Clock Unit.
TU	Trunk Unit.

1.5 UNIT NUMBER

Description: These columns display the unit number of the named unit. Refer to the specific unit form for the valid unit numbers.

1.6 DFI OR SG

Copyright © 2006 Lucent Technologies

Description: These columns display the Digital Facility Interface pack number if the unit is a Digital Lines Trunk Unit, or the Service Group of the unit. Refer to the specific unit form for the valid Service Group Numbers.

DATA PORT ASSIGNMENTS

The second set of columns displays the Data Port Assignments.

1.7 DG0 AND DG1

Description: These columns display the port numbers of Data Group 0 and Data Group 1.

Valid Values: 0 - 15

1.8 UNIT TYPE

Description: These columns display the type of unit assigned to this Data Port. Because DCTU, FIU, MSU and RCLK do not receive Data Ports, these are not included in the following valid Unit Types.

Valid UNIT TYP Entries

Entry	Definition
DCLU	Digital Carrier Line Unit.
DLTU	Digital Line/Trunk Unit.
DSU	Digital Service Unit.
IDCU	Software Release: 5E8 and later. Integrated Digital Carrier Unit.
ISLU	Integrated Services Line Unit.
ISTF	Integrated Services Test Function.
LU	Line Unit.
PSU	Packet Switching Unit.1
RAF	Recorded Announcement Function Unit.
TU	Trunk Unit.

1.9 UNIT NUMBER

Description: These columns display the Unit Number of the named unit. Refer to the specific unit form for the valid Unit Numbers.

1.10 DFI OR SG

Description: These columns display the Digital Facility Interface pack number if the unit is Digital Line/Trunk Unit, or the Service Group of the unit.

Refer to the specific unit form for the valid Service Group Numbers.

1.11 STUFFPAT

Description: If the unit is a Digital Line/Trunk Unit, the Stuffing Pattern will be displayed.

Valid Values: A, B, C or D.

FACILITY PORT ASSIGNMENTS

The third set of columns displays the Facility Interface Port Assignments. This information is required only if the SM is a Remote Switching Module.

Copyright © 2006 Lucent Technologies

1.12 FIU SGA AND FIU SGB

Description: These columns display the port number of Facility Interface Unit Subgroup A and Subgroup B.

Valid Values: 0 - 9

1.13 UNIT TYPE

Description: DLTU is the only valid unit type.

1.14 UNIT NUMBER

Description: These columns display the unit number of the Digital Line/Trunk Unit.

Valid Values: 0 and 1

1.15 DFI

Description: These columns display the Digital Facility Interface pack number assigned to the port.

Valid Values: 1 - 10

Copyright © 2006 Lucent Technologies

SEC. 46: 5844 RECORD
ISCN ASSIGNMENT RECORD

1. GENERAL

The 5844 Record, available with 5E4(2) and later Software Releases, is used as an inventory of assigned ISCNs (Integrated Services Channel Numbers). This record is not used for ODA input.

ISCNs are placed on this record when the Switching Module value assigned on an EQPSUPH form (5742 Record) matches the first three digits of an LCEN assigned on a form where an ISCN is assigned and when the PSU SHELF value assigned on the EQPSUPH form matches the first digit of the assigned ISCN. This 5844 Record displays the ISCN, the associated form, and key field.

2. RECORD ENTRIES

2.1 BASE AND CONTROL, ESS UNIT

Description: The Base and Control Number and Office Name on each record.

2.2 SM

Description: The Switching Module number.

Valid Values: 1 - 192

2.3 PSU SHELF

Description: The Packet Switching Unit Shelf number.

valid values: 0 - 15

2.4 ISCN

Description: The Integrated Services Channel Number. The ISCN represents the PSU shelf, channel group, and channel located in the PSU. ISCNs are defined as follows:

INTEGRATED SERVICES CHANNEL NUMBER			
Equipment		Format	Valid Entries
PSU Shelf	-	X	0-4
Channel Group	CHL GRP	XX	00-15
Channel	CHL	XXX	000-127

2.5 FORM

Description: This column contains the form names on which the ISCNs have been assigned. For 5E5 and later, the following forms are used to assign ISCNs:

- AMLBDSL (5447 Record)
- DSL (5907 Record)
- DSLAP (5963 Record)
- DSLUSR (5908 Record)

Copyright © 2006 Lucent Technologies

- ODBRES (5906 Record)
- OSPSDSL (5411 Record)
- PSISM (5920 Record)
- RTERM (5174 Record)
- TRUNK (5204 Record)
- XAT (5909 Record)

2.6 LCEN

Description: The Line Card Equipment Number is an 8-digit equipment number. It is the key field from the AMLBDSL and OSPSDSL forms. See format below.

2.7 DSLOETYPE/DSLOE

Description: This is the DSL Office Equipment Type and Office Equipment Number from the DSL and DSLUSR forms. The DSL OE TYPEs are provided in the table below.

DSL OE TYPE/DSLOE

Value	Definition
I	The DSL OE TYPE is associated with an 8-digit LCEN for a (R)ISLU (Remote)Integrated Services Line Unit.
G	Software Release: 5E8 and later. The DSL OE is associated with a 10-digit ILEN for a remote terminal or PUB43801. This designation accommodates up to 2048 lines.
M	Software Release: 5E8 and later. The DSL OE is associated with an 8-digit ILEN for a remote terminal or PUB43801. This designation accommodates 99 lines or less.

If an "I" is entered, the OE number consist of:

LINE CARD EQUIPMENT NUMBER

Equipment		Format	Valid Entries
Switching Module	SM	XXX	001-192
(Remote) Integrated Services Line Unit	(R)ISLU	X	0-7
Line Group Card	LGC	XX	00-15
Line Card	LC	XX	00-31

If a "G" is entered, the OE number consist of:

IDCU REMOTE TERMINAL NUMBER, TYPE G

Equipment		Format	Valid Entries
Switching Module	SM	XXX	001-192
Unit Number	IDCU	X	0-7
Remote Terminal	RT	XX	01-31
Line	LINE	XXXX	0001-2048

If an "M" is entered, the OE number consist of:

IDCU REMOTE TERMINAL NUMBER, TYPE M

Equipment		Format	Valid Entries
Switching Module	SM	XXX	001-192
Unit Number	IDCU	X	0-7
Remote Terminal	RT	XX	01-31
Line	LINE	XX	01-99

Copyright © 2006 Lucent Technologies

2.8 AP SITE ID

Description: This is the Application Processor Site ID value from the DSLAP form.

Valid Values: 1 - 255

2.9 CKT TN

Description: This is the CKT TN value from the DSLUSR form.

Valid Values: 7 digits

2.10 CKT MLHG

Description: This is the CKT MLHG value from the DSLUSR form.

Valid Values: 1 - 2000

2.11 CKT TERM

Description: This is the CKT TERM value from the DSLUSR form.

Valid Values: 1 - 2015 or 3001 - 3999

2.12 DPKT TN

Description: This is D-channel Packet TN value from the DSLUSR.

Valid Values: 7 digits

2.13 DPKT MLHG

Description: This is the D-channel Packet MLHG value from the DSLUSR form.

Valid Values: 1 - 2000

2.14 DPKT TERM

Description: This is the D-channel Packet TERM value from the DSLUSR form.

Valid Values: 1 - 2015

2.15 ODB TN

Description: This is the On Demand B-channel TN value from the DSLUSR form.

Valid Values: 7 digits

2.16 ODB MLHG

Description: This is the On Demand B-channel MLHG value from the DSLUSR form.

Valid Values: 1 - 2000

Copyright © 2006 Lucent Technologies

2.17 ODB TERM

Description: The On Demand B-channel TERM value from the DSLUSR form.

Valid Values: 1 - 2015

2.18 SHELF

Description: This is the PSU SHELF value assigned on the ODBRES form. This value should match the PSU SHELF value defined on the EQPSUPH form.

Valid Values: 0 - 4

2.19 CHL GRP

Description: This is the Channel Group value from the ODBRES form.

Valid Values: 00 - 15

2.20 DLT

Description: This is the Data Link Terminal value from the PSISM form.

Valid Values: 1 - 160

2.21 UNIT TYPE

Description: This field identifies the unit as an IDCU RT (Remote Terminal) from the RTERM form.

Software Release: 5E8 and later
Valid Entries: Valid Values: IDCU

2.22 UNIT NUMBER

Description: This is the IDCU RT number from the RTERM form.

Software Release: 5E8 and later
Valid Entries: Valid Values: 0 - 7

2.23 RT EX

Description: This is the RT External number.

Valid Values: 1 - 31

2.24 TGN

Description: This is the TGN value from the TRUNK form.

Valid Values: 1 - 2000

2.25 MEMB

Description: This is the MEMB value from the TRUNK form.

Copyright © 2006 Lucent Technologies

Valid Values: 0 - 1951

2.26 PKT TN

Description: This is the Packet TN value from the DSLUSR form.

Valid Values: 7 digits

2.27 PKT MLHG

Description: This is the Packet MLHG value from the DSLUSR or XAT form.

Valid Values: 1 - 2000

2.28 PKT TERM

Description: This is the Packet TERM value from the DSLUSR or XAT form.

Valid Values: 1 - 2015

Copyright © 2006 Lucent Technologies

SEC. 47: 5845 RECORD
RETROFIT INFORMATION FORM - RETINFO

1. GENERAL

The 5845 Record is available with 5E3 and later Software Releases. This form provides an ordering mechanism for Disk Configurations and Optional Disk Layouts in a retrofitting office. A retrofitting office cannot use this form to change a disk drive from simplex software backup to duplex active. This can be done using standard growth procedures between the preliminary and final ECD (Equipment Configuration Data) dumps. AMA and SM ODD capacities for each Disk Configuration and for each Optional Disk Layout are provided to the switch owner in the 5ESS Switch Administration Guidelines, 5D5-070-100, along with appropriate engineering rules. These guidelines are applicable to both installing and retrofitting offices.

An additional feature of the RETINFO form is to display the SM ODD, AMA and DISK ODD capacity that an office has requested on the form. Once the switch owner has completed the DISK TYPE and ("REQUIRED" OR "OPTIONAL") OPTIONING fields for MHD0,1 through MHD12,13, the total megabyte capacity is displayed in the SM ODD and AMA fields. This allows the switch owner to verify that the capacity they desire has in fact been ordered. The current PHYSICAL AM MEMORY SIZE, the DISK SIZE, and the EQUIPAGE fields for MHD0,1 through MHD12,13 are populated on the form from the retrofitting offices ECD dump. This information cannot change during a retrofit so these fields are no-change fields.

2. FORM AND RECORD ENTRIES

2.1 BASE AND CONTROL, ESS UNIT

Enter the Base and Control Number and the office name on each record.

2.2 * KEY

Description: Enter the key value for this form. The only valid entry is 0 and is supplied as the default value.
Default: 0

2.3 OLD PHYSICAL AM MEMORY SIZE

Description: This field is automatically populated from the retrofitting office's ECD dump. This field is the size of old memory (in megabytes) of the 3B Processor. This is a no change field.

Software Release: 5E9(1) and later
Valid Entries: 48, 64, or 128

Data Rules:

For 5E11 thru 5E14, this field must be 48 for a "VCDX" HARDWARE PLATFORM.

For 5E15 and later, OLD PHYSICAL AM MEMORY SIZE must be 96 for "VCDX" HARDWARE PLATFORM.

2.4 HARDWARD PLATFORM

Description: This field is automaticaly populated from the retrofitting office's ECD dump. This is a no change field.

Copyright © 2006 Lucent Technologies

Software Release: 5E10 and later

Data Rules:

For 5E15 and later, OLD PHYSICAL AM MEMORY SIZE must be 96 for VCDX

2.5 DISK CONFIGURATION

Description: This field replaces the DISK SIZE and DISK TYPE fields for 5E8 and later. It is populated automatically and cannot be changed. It applies only to the MHD0,1 - MHD30,31, excluding MHD14 and MHD15. For valid DISK CONFIGURATION information, refer to the DISK CONFIG field in Division 8, Section 8.

Software Release: 5E8 and later
Valid Entries:
5E10 and later: 66 or 11

TOTAL SIZE IN MEGABYTES

The following fields (Section 2.6 - Section 2.8) will automatically display the total SM ODD and the AMA capacity (in megabytes) the switch owner has requested by completing all other fields on this form. The DISK ODD (KB) field displays the total DISK ODD for the DISK CONFIGURATION (in kilobytes). Once all other fields on this form are completed and the switch owner activates the validate key, information for these three fields is displayed. Refer to the PCT SMODD/AMA field in Division 8, Section 9 for equippage information.

2.6 SM ODD

Description: The total SM ODD capacity is based on the Disk Configuration, the total number of disks equipped and optional layouts. This information is automatically displayed. This is a no change field.

Software Release: 5E6 and later

2.7 AMA

Description: The total AMA capacity is based on the Disk Configuration, the total number of disks equipped and optional layouts. This information will be automatically displayed. This is a no change field.

Software Release: 5E6 and later

2.8 DISK ODD (KB)

Description: Total Disk ODD per Disk Configuration in kilobytes. This is a no change field.

Software Release: 5E6 and later

MOVING HEAD DISKS

Moving Head Disks fields (Section 2.9 - Section 2.14) are automatically displayed. MHDs are displayed and equipped in pairs. The EQUIPAGE field is used to indicate whether or not a pair is equipped. MHD0,1 and MHD2,3 must always be equipped.

The NEW OPTIONING and OLD OPTIONING fields are used to indicate whether the MHD is required by the

Copyright © 2006 Lucent Technologies

office to meet necessary memory requirements or if it is an optional disk pair to provide extra memory and/or extra AMA space. Note that the optioning fields only apply to MHD0,1 - MHD12,13.

For 5E8 and later, note that the NEW OPTIONING field name, applicable to MHD0,1 - MHD12,13, was changed to NEW PERCENT SMODD/AMA.

2.9 MHD0,1 EQUIPAGE

Description: Is MHD0,1 equipped? This field will be automatically populated from the retrofitting office's ECD dump. This field indicates if Moving Head Disk 0 and 1 is equipped. This is a no change field.

Software Release: 5E6 and later
Valid Entries: Y, N

Data Rules:

This field must always be set to "Y".

2.10 MHD2,3 EQUIPAGE

Description: Is MHD2,3 equipped? This field will be automatically populated from the retrofitting office's ECD dump. This field indicates if Moving Head Disk 2 and 3 is equipped, "Y" (Yes) or "N" (No). This field must always be set to "Y". This is a no change field.

Software Release: 5E6 and later
Valid Entries: Y, N

Data Rules:

This field must always be set to "Y".

2.11 MHD4,5 - MHD30,31 EQUIPAGE

Description: This field will be automatically populated from the retrofitting office's ECD dump. They indicate which Moving Head Disk pairs are equipped. Refer to Division 8, Section 8 for equippage information.

2.12 DISK SIZE

Description: This field is automatically populated from the retrofitting office's ECD dump. A 3 represents 340 or SCSI322. A 6 represents SCSI600. This is a no change field.

Software Release: 5E8 and later

2.13 MHD4,5 - MHD12,13 NEW PERCENT SMODD/AMA

Description : MHD4,5 - MHD12,13 new disk usage optioning. This is a no change field.

Valid NEW PERCENT SMODD/AMA Entries	
5E8 - 5E9(2)	
Entry	**Definition**
R	Required
1	0% SMODD
2	25% SMODD
3	50% SMODD
4	75% SMODD
5	100% SMODD

Copyright © 2006 Lucent Technologies

Valid NEW PERCENT SMODD/AMA Entries	
5E10 and later	
Entry	**Definition**
R	Required
1	0% SMODD
2	25% SMODD
3	50% SMODD

For 5E10 and later, if DISK CONF is 11, enter 1 - 3. If DISK CONF is 63 or 66, enter 1 - 5.

2.14 MHD4,5 - MHD12,13 OLD OPTIONING

Description: MHD4,5 - MHD12,13 old disk usage optioning. This is a no change field.

Software Release: 5E8 and later

Copyright © 2006 Lucent Technologies

SEC. 48: 5846 RECORD
INTEGRATED DIGITAL CARRIER UNIT
EQIDCU FORM

1. GENERAL

The 5846 Record is available with the 5E8 Software Release. It is used to define the IDCU (Integrated Digital Carrier Unit) and the LSI (Loop Side Interface) packs, ELI (Electric Line Interface) packs, and the PIDBs (Peripheral Interface Data Buses) associated with the IDCU.

NOTE: In the absence of an IDCU feature section in Division 2, the following discussion (including EQIFAC and RTERM Requirements, and IDCU Originating Equipment) is provided for general information.

IDCU equipment can be attached to standard or loaded SMs (Switching Modules). However, when providing analog (as with DCLU), it may be mounted in an SM with a standard configuration, but when this unit functions with ISDN, it must be mounted in an SM with a loaded configuration.

Using IFACs (IDCU Facilities), IDCU equipment provides for both analog and ISDN ports which can be attached to either PUBs (Peripheral Unit Buses) or to RTs (Remote Terminals). IDCU equipment can be provisioned to accommodate up to 40 IFAC connections. Provisioning of PUBs requires only the EQIFAC form (5847 Record). There are no restrictions to the number of PUB IFAC connections.

Provisioning of RTs also requires that the RTERM form (5174 Record) be defined. The RTERM form identifies the IFAC connections defined on the EQIFAC form. After an RT is defined on the RTERM form, an IDCU port can be defined as indicated below:

IDCU Port/Equipment Assignments

ODA Form	RT/IFAC Type	OE Format
LINE (5109)	TR008 TR303	RT
LINE (5109)	DS1	PUB43801
MLHLN (5111)	TR008 TR303	RT
TRUNK (5204)	TR008 TR303	RT
DSL (5902)	TR303	RT
DSLUSR (5908)	TR303	RT

Port assignments cannot be assigned to IDCU equipment unless the related PUB43801 IFAC or RTERM IFACs are defined and are "operational". Port assignments cannot be duplicated on the same SM.

1.1 EQIFAC Requirements

Each EQIFAC form can define up to 20 IFAC connections. Two EQIFAC forms may be used with each EQIDCU form to define up to 40 IFACs per IDCU. IFACs defined on the EQIFAC form with PUB43801 set to "N" are connected to remote terminals. A TR008 remote terminal can have up to 5 IFACs connected to it. A TR303 remote terminal can have from 2 to 28 IFACs connected to it.

An IFAC defined on the EQIFAC form with PUB43801 set to "Y" will be connected to DAC equipment. PUB43801 ports can be defined on the LINE form directly from operational IFACs of the EQIFAC form.

1.2 RTERM Requirements

Copyright © 2006 Lucent Technologies

Two types of remote terminals can be defined on the RTERM form: TR008 and TR303. The TR008 remote terminal can have from 1 to 5 IFACs defined on the EQIFAC form connected to it. Up to 96 analog lines can be assigned on a TR008 when OE SIZE on the OFCOPT form (5509 Record) is set to accommodate an 8-digit Office Equipment number. A TR303 remote terminal can have from 2 to 28 IFACs defined on the EQIFAC form connected to it. Up to 2048 analog and ISDN lines can be assigned to a TR303 when OE SIZE on the OFCOPT form is set to accommodate a 10-digit Office Equipment number.

1.3 IDCU Originating Equipment

For operational TNs to be assigned via IDCU remote terminal ports, the EQIDCU must be operational, the EQIFAC must have operational IFACs assigned, and an RTERM form must be operational and connected to the IDCU equipment with the operational IFACs defined on the EQIFAC form.

If an IDCU remote terminal or PUB is to be provisioned, the same OE TYPE of either "G" (10-digit) or "M" (8-digit) must be specified for all associated assignment forms. The OE TYPE is dictated by the OE SIZE on the OFCOPT form (5509 Record).

IDCU ports can be assigned the functionality of all analog and ISDN ports. However, IDCU does not support OSPS.

1.4 PIDB Assignments

PIDB (Peripheral Interface Data Bus) assignments are equipped in pairs of the same PIDB TYPE and relative PIDB NO. on the two sides of both Service Groups. The entries on this form are only for SG0 (Service Group 0), since the assignments for SG1 (Service Group 1) can be inferred from the assignments for SG0.

Two types of PIDBs can be defined for IDCU on the EQIDCU form - DUAL or PSU. D-Channel traffic requires at least one PIDB TYPE of "PSU". For TR303 RTs, EOCs/TMCs also require at least one PIDB TYPE of "PSU".

PIDBs of PIDB TYPE "DUAL" connect to the TSIU (Time Slot Interchange Unit) and the assignments to the same PIDB NO. on the two sides must be made to the same DI SHLF with SG0 assigned to an even numbered PIDB and SG1 assigned to the next higher odd numbered PIDB. The PIDB TYPE of "DUAL" is the only type allowed in PIDB NO. positions of 1 - 11. PIDB NO. 0 is always required and must have a PIDB TYPE of "DUAL".

PIDBs of PIDB TYPE "PSU" connect to the PSU with the same relative PIDB NO. assigned to the same PSU SHLF and DFPOS. The PIDB TYPE of "PSU" is the only type allowed in PIDB No. positions of 16 - 22. PIDBs of type "PSU" must have the PSU SHELF and DFPOS defined on the EQPSU (5741 Record) and EQPSUPH (5742 Record) forms.

PIDB NO. 12 - 15 positions can be shared by both "DUAL" and "PSU". If the PIDB TYPE is "PSU", there are special restrictions due to space availability on the backplane. If positions 12 - 15 are "PSU", then a specific PIDB NO. must not be entered. The table below provides allowable configurations.

Valid LSI0 EQSTAT Entries

PIDB NO.	PIDB TYPE	PIDB NO.	PIDB TYPE
8	Dual	12	Dual or Unassigned
9	Dual	13	Dual or Unassigned
10	Dual	14	Dual or Unassigned
11	Dual	15	Dual or Unassigned
15	PSU	11	Unassigned
16	PSU	10	Unassigned
17	PSU	9	Unassigned

Copyright © 2006 Lucent Technologies

18	PSU	8	Unassigned

1.5 Recent Change View

The corresponding Recent Change View for this form is 19.12.

2. FORM AND RECORD ENTRIES

2.1 BASE AND CONTROL, ESS UNIT

Enter the Base and Control Number and the Office Name on each record.

2.2 * SM

Description: Enter the Switch Module identification number.

Required Field.
Valid Entries: 1 - 192

Data Rules:

For each SM assignment, there must be a corresponding EQIM form (5700 Record).

For 5E9(2) and later, each value of SM entered on the EQIDCU and EQIFAC forms must have a corresponding EQIM form with the same SM value where the value entered for CONFIGURATION supports Integrated Digital Carrier Units.

2.3 * IDCU

Description: Enter the Integrated Digital Carrier Unit identification number.

Required Field.
Valid Entries:
5E9(2) and earlier: 0 - 7
5E10 and later: 0 - 42 (SM-2000 only)

Data Rules:

Equipment unit number assignments cannot be duplicated among the EQIDCU (5846 Record), EQDCLU (5810 Record), EQISLU (5731 Record), EQLU (5710 Record), and EQRISLU (5732 Record) forms for a specified SM.

2.4 IDCU EQSTAT

Description: Enter the status of the IDCU equipment.

Required Field.
Default: O
Valid Entries:

Valid IDCU EQSTAT Entries

Entry	Description
U	Unequipped.
G	Growth.

Copyright © 2006 Lucent Technologies

O	Operational.

2.5 #IDCU CLI

Description: Enter the Change Level Indicator for this IDCU.

Required Field.
Valid Entries: 0 - 7FFFFFFF

2.6 # EQL BAY

Description: Enter the equipment location bay number.

Required Field.
Valid Entries:

Valid EQL BAY Entries, 5E9(2) - 5E16(1)

Entry	Definition
0 - 4	Switching Module (non-SM-2000).
0 - 14	SM-2000; SM Cabinet aisle.
100 - 104	SM-2000; Back panel; wiring position.
200 - 208	SM-2000; Front panel; door position.

Valid EQL BAY Entries for 5E16(2) and later

Entry			Type
000 - 004			SM
000 - 014,	100 - 104,	200 - 208,	SM-2000
A00 - A14,	B00 - B04,	C00 - C08,	
D00 - D14,	E00 - E04,	F00 - F08,	
G00 - G14,	H00 - H04,	J00 - J08,	
K00 - K14,	L00 - L04,	M00 - M08,	
N00 - N14,	P00 - P04,	Q00 - Q08,	
R00 - R14,	S00 - S04,	T00 - T08,	
U00 - U14,	V00 - V04,	W00 - W08,	
X00 - X14,	Y00 - Y04,	Z00 - Z08	

2.7 # EQL UNVER

Description: Enter the equipment location unit vertical position.

Required Field.
Valid Entries: 0 - 84

2.8 # EQL AISLE

Description: Enter both the equipment floor and aisle number.

Required Field.
Valid Entries: 0000-9999

2.9 INTF UNIT

Description: Enter the Interface Unit number. This field was added to support the 5E15 Optically Extended Control and Data Unit feature. See Division 2, Section 9V.

Required Field.

Copyright © 2006 Lucent Technologies

Valid Entries: 0 - 8

Data Rules:

When INTF UNIT is greater than 0, it must be defined on the EQXCDU form (5853 Record) for the same Switching Module. In addition, the EQSTAT value on the EQCI must not exceed the MOD CTL SG0/1 EQSTAT on the EQXCDU form. (EQSTAT of "O" is greater than EQSTAT of "G", and EQSTAT of "G" is greater than EQSTAT of "U".)

The SM/INTF UNIT/DATA GRP combinations entered on this form must be defined on a EQDI form or a EQXCDU form. Also, the EQSTAT on the matching EQDI or EQXCDU form must be greater than or equal to the equipment status value ("O", "G", or "U") on this form (e.g., "O" is greater than "G" which is greater than "U"). Note also that when INTF UNIT is greater than 0 and DATA GRP is 0, these Data Groups are defined on the EQXCDU form.

For 5E16(2) and later, when INTF UNIT is 0, EQL BAY must be 000 - 014, 100 - 104, or 200 - 208.

2.10 #MAP X

Description: This field is a Recent Change only field on View 19.12. It cannot be entered in ODA.

This field is used to hold data that will be given to the Lucent Secured Feature Administrator when obtaining a Passsword for PIDB growth. This field supports the PIDB Growth Control feature. For more information on this feature, see Division 2, Section 7E.

Software Release: 5E9(1) and later.

2.11 PIDB LIMIT

Description: Indicates the maximum number of operational Peripheral Interface Data Buses allowed on the IDCU. This field supports the PIDB Growth Control feature. For more information on this feature, see Division 2, Section 7E.

Software Release: 5E9(1) and later.
Required Field.
Valid Entries: 4, 8, 12, or 16

Data Rules:

More DI/PIDB assignments can not be made than are allowed by the value of PIDB LIMIT.

For 5E10 and later, if PIDB TYPE is "PSU", neither the PSU SHELF SIDE O CLI or the PSU SHELF SIDE 1 CLI values may be 3 ("PSU" PIDB TYPEs cannot be associated with data fanout multiple PIDB PSU shelves).

2.12 PASSWORD

Description: This field is a Recent Change only field on View 19.12. It cannot be entered in ODA.

IDCU PIDB limit control password. This field is used to specify the password required to make more PIDBs operational than allowed by the current limit. The password can be obtained from the Lucent Secured Feature Administrator in order to allow PIDB growth beyond the PIDB limit. This field supports the PIDB Growth Control feature. For more information on this feature, see Division 2, Section 7E.

Software Release: 5E9(1) and later.

Copyright © 2006 Lucent Technologies

SERVICE GROUP 0

The following fields (Section 2.13 - Section 2.18) define IDCU parameters specific to SG0.

2.13 # CTRL GROUP

Description: Enter the Control Group interface number.

Required Field.
Valid Entries:
For 5E9(2) and earlier: 0 or 1
For 5E10 and later: 0 - 1 for SM or
0 - 3 for SM-2000.

Data Rules:

If CTRL GROUP is 1, the EQSTAT assigned on this form must be less than or equal to the CONTROL GROUP 1 STATUS assigned on the corresponding EQIM form.

CONTROL GROUP numbers assigned on the following forms must be defined as CI on an EQCI form: EQDCTU (5751 Record), EQDCLU (5810 Record), EQDS (5740 Record), EQDSC3 (5852 Record), EQDUP (5730-2), EQGDSC3 (5860 Record), EQIDCU (5846 Record), EQISLU (5731 Record), EQISTF (5823 Record), EQLU (5710 Record), EQPSU (5741 Record), EQRA (5821 Record), EQTU (5720 Record), EQFIU (5753 Record), EQMSU (5750 Record), EQRCLK (5723 Record). Furthermore, the EQSTAT on the matching EQCI form must be greater than or equal to the equipment status value on the equipment form (i.e., "O"' is greater than "G" which is greater than "U").

2.14 # CTRL PORT

Description: Enter the Control Port identification.

The first is the Control Port entered on the form, the second Control Port is one plus the Control Port entered on the form.

Required Field.
Valid Entries: even number 0 - 20

Data Rules:

Control Port assignments cannot be duplicated on a SM.

Control Port assignments cannot be duplicated on the following forms: EQDCTU (5751 Record), EQDCLU (5810 Record), EQDS (5740 Record), EQDSC3 (5852 Record), EQDUP (5730-2), EQGDSC3 (5860 Record), EQIDCU (5846 Record), EQISLU (5731 Record), EQRISLU (5732 Record), EQISTF (5823 Record), EQLU (5710 Record), EQPSU (5741 Record), EQRA (5821 Record), EQTU (5720 Record), EQFIU (5753 Record), EQMSU (5750 Record), EQRCLK (5723 Record).

For 5E12 and later, for the EQAIU, EQIDCU, EQISLU, EQRISLU and EQPSU forms, two control ports are assigned based on the Control Port entered on the form. The first is the Control Port entered on the form, the second Control Port is one plus the Control Port entered on the form. Non-SM-2000 class processors reserve Control Group/Control Port 0/0 and 0/1 for the Local Digital Service unit. No other unit may specify Control Group/Control Port 0/0 or 0/1 for non-SM-2000 class processors. Non-SM-2000 class processors reserve

Copyright © 2006 Lucent Technologies

Control Group/Control Port 0/0 and 0/1 for the Local Digital Service unit. No other unit may specify Control Group/Control Port 0/0 or 0/1 for non-SM-2000 class processors.

2.15 LSI0 EQSTAT

Description: Enter the equipment status of the SG0 LSI0 (Loop Side Interface 0) pack.

Valid LSI0 EQSTAT Entries

Entry	Description
U	Unequipped.
G	Growth.
O	Operational.

Data Rules:

SG0 LSI0 EQSTAT must be lower than or equal to ELI0 EQSTAT.

2.16 LSI1 EQSTAT

Description: Enter the equipment status of the SG0 LSI1 (Loop Side Interface 1) pack.

Valid LSI1 EQSTAT Entries

Entry	Description
U	Unequipped.
G	Growth.
O	Operational.

2.17 LSI0 CLI

Description: Enter the LSI0 CLI value.
Valid Entries: 0 - 7FFFFFFF

Data Rules:

The correct CLI value is 00000000.

2.18 LSI1 CLI

Description: Enter the LSI1 CLI value.
Valid Entries: 0 - 7FFFFFFF

Data Rules:

The correct CLI value is 00000000.

ELECTRIC LINE INTERFACE 0

The following fields (Section 2.19 - Section 2.21) define the ELI 0 packs.

2.19 EQSTAT

Description: Enter the status of the ELI0 equipment.

Valid ELI0 EQSTAT Entries

Entry	Description

U	Unequipped.
G	Growth.
O	Operational.

Data Rules:

ELI0 EQSTAT must be lower than or equal to IDCU EQSTAT.

2.20 CBL SERIES

Description: Enter the cable series used for this ELI0.
Valid Entries: 609S or 1249S

2.21 CBL DISTANCE

Description: Enter the distance (in feet) to the DSX panel for this ELI0.
Valid Entries:
0 - 655, for 609S Cable
0 - 450, for 1249S Cable

SERVICE GROUP 1

The following fields (Section 2.22 - Section 2.27) define IDCU parameters specific to Service Group 1.

2.22 CTRL GROUP

Description: This field is automatically entered with an identical value as CTRL GROUP for Service Group 0.

2.23 CTRL PORT

Description: This field is automatically entered with a value one greater than CTRL GROUP for Service Group 0.

2.24 LSI0 EQSTAT

Description: Enter the equipment status of the SG1 LSI0 (Loop Side Interface 0) pack.

Valid LSI1 EQSTAT

Entry	Description
U	Unequipped.
G	Growth.
O	Operational.

Data Rules:

SG0 LSI1 EQSTAT must be lower than or equal to ELI0 EQSTAT.

2.25 LSI1 EQSTAT

Description: Enter the equipment status of the SG1 LSI1 (Loop Side Interface 1) pack.

Valid LSI1 EQSTAT Entries

Entry	Description

U	Unequipped.
G	Growth.
O	Operational.

2.26 LSI0 CLI

Description: Enter the SG1 LSI0 CLI value.
Valid Entries: 0 - 7FFFFFFF

Data Rules:

The correct CLI value is 00000000.

2.27 LSI1 CLI

Description: Enter the SG1 LSI1 CLI value.
Valid Entries: 0 - 7FFFFFFF

Data Rules:

The correct CLI value is 00000000.

ELECTRIC LINE INTERFACE 1

The following fields (Section 2.28 - Section 2.30) define the ELI1 packs.

2.28 EQSTAT

Description: Enter the status of the ELI 1 equipment.

Valid EQSTAT Entries

Entry	Description
U	Unequipped.
G	Growth.
O	Operational.

Data Rules:

ELI1 EQSTAT must be lower than or equal to IDCU EQSTAT.

2.29 CBL SERIES

Description: Enter the cable series used for this ELI1.
Valid Entries: 609S or 1249S

2.30 CBL DISTANCE

Description: Enter the distance (in feet) to the DSX panel for this ELI1.
Valid Entries:
0 - 655, for 609S cable
0 - 450, for 1249S cable

Data Rules:

Copyright © 2006 Lucent Technologies

For PIDB N0s 9 - 14, CBL SERIES and CBL DISTANCE are not required.

PIDB NUMBER (PIDB)

The following fields (Section 2.31 - Section 2.34) define the PIDBs (Peripheral Interface Data Buses). Before any DPIDBs can be assigned to the IDCU, a PSU with protocol handlers must exist on the IDCU's SM. PIDB and DFPOS (Data Fanout Positions) values depend upon the entry in the PIDB TYPE field. Allowable configurations are provided below in the Valid PIDB Number Combinations table (see the PIDB/DFPOS field).

2.31 PIDB TYPE

Description: The PIDB TYPE can be either a DUAL (Dual) unit or a PSU (Packet Switch Unit). Enter the type of PIDB.

Valid PIDB TYPE Entries

Entry	Description
DUAL	TSIU (Time Slot Interchange Unit) PIDB.
PSU	PSU (Packet Switched Unit) PIDB.

Data Rules:

If PIDB TYPE is "PSU", an EQPSU form (5741 Record) and a EQPSUPH form (5742 Record) must be defined with the same SM and PSU SHELF combination.

If PIDB TYPE is "PSU", a corresponding RTERM form (5714 Record) must exist with the following time slot management fields entered: TMC PRI DPIDB, TMC NPRI DPIDB, EOC PRI DPIDB and EOC NPRI DPIDB.

If PIDB TYPE is "PSU", the PSU SHELF/DF POS assignments on the EQIDCU, EQISLU, and/or EQAIU forms for a specified SM must be unique.

If PIDB TYPE is "PSU", a matching PSU SHELF must be assigned on the EQPSU form and EQSTAT must be "O".

EQAIU, EQIDCU, or EQISLU forms with PIDB TYPE of "PSU" must have a corresponding EQPSUPH form with the same SWITCHING MODULE and PSU SHELF combination.

For 5E10 and later, when the D ISCN and/or PPB1/PPB2 ISCN are assigned on the DSL form, and/or ISCN1 and/or ISCN2 are assigned on the DSLUSR form, and/or SHELF/CHL GRP/CHL combinations are assigned on the MISLINK OE with an originating equipment type of "G", each ISCN or SHELF/CHL GRP/CHL combination must have a proper Packet Switching Unit shelf assigned on the EQIDCU form. The PSU shelf specified by the first digit of the ISCN on either the DSL or DSLUSR forms or by the entry in the SHELF field on the MISLINK form must be defined on the EQIDCU form with a PIDB TYPE of "PSU".

2.32 EQSTAT

Description: Enter the status of the ELI PIDB.

Valid EQSTAT Entries

Entry	Description
U	Unequipped.
G	Growth.
O	Operational.

2.33 DI/PSU SHLF

Description: The DI/PSU SHLF field specifies whether the DI or the PSU is used. Enter the value of the DI or PSU SHLF used.
Valid Entries:
For 5E9(2) and earlier: 0 - 1, DUAL, for DI (Direct)
For 5E9(2) and earlier: 0 - 4, PSU, for Packet Switched Unit (PSU)
For 5E10 and later: DI: 0 - 1 for SM or 0 - 5 for SM-2000
For 5E10 and later: PSU SHLF: Enter 0 - 4.

Data Rules:

The following forms cannot have a duplicate Data Port assignment on the same Switching Module: EQDCLU (5810 Record), EQDS (5740 Record), EQDSC3 (5852 Record), EQDUP (5730-2), EQGDSC3 (5860 Record), EQIDCU (5846 Record), EQISLU (5731 Record), EQISTF (5823 Record), EQLU (5710 Record), EQPSU (5741 Record), EQRA (5821 Record), EQTU (5720 Record).

2.34 PIDB/DFPOS

Description: The PIDB/DFPOS (PIDB/Data Fanout Positions) field specifies whether a PIDB or a DFPOS is used.
Valid Entries: (see Valid PIDB Number Combinations table below)

The entries in this field depend upon the PIDB TYPE. If "DUAL" is entered, the PIDB data port must be populated. If "PSU" is entered, the DFPOS field must be populated. Enter the PIDB number or the Data Fanout Position.

Valid PIDB Number Combinations 5E9(2) and earlier

PIDB TYPE	**Positions**	**EQSTAT**	**DI or** PSU SHLF	**PIDB or** DFPOS
DUAL	11 - 0	O,G,U	DI=0,1	PIDB= 0-14
DUAL	15 - 12	O,G,U	DI=0,1	PIDB= 0-14
PSU	15 - 12	O,G,U	PSU SHLF=0-4	DFPOS= 0-5
PSU	22 - 16	O,G,U	PSU SHLF=0-4	DFPOS= 0-5

Valid PIDB Number Combinations 5E10 and later

PIDB TYPE	**Pos**	**EQSTAT**	**DI or** PSU SHLF for SM	**DI or** PSU SHLF for SM2000	**PIDB or** DFPOS for SM	PIDB or DFPOS for SM2000
DUAL	11 - 0	O,G,U	DI=0,1	DI=0-5	PIDB = 0-14	PIDB = 0-22
DUAL	15 - 12	O,G,U	DI=0,1	DI=0-5	PIDB =0-14	PIDB = 0-22
PSU	15 - 12	O,G,U	PSU SHLF = 0-4	PSU SHLF = 0-4	DFPOS = 0-5	DFPOS = 0-5
PSU	22 - 16	O,G,U	PSU SHLF = 0-4	PSU SHLF = 0-4	DFPOS = 0-5	DFPOS = 0-5

```
eqidcu                          5ESS SWITCH
SCREEN 1 OF 3             OFFICE DATA ADMINISTRATION
```

```
(5846)                  INTEGRATED DIGITAL CARRIER UNIT

*1. SM          ___             SG0                        SG1
*2. IDCU        _        #11. CTRL GROUP _             CTRL GROUP
 3. IDCU EQSTAT O        #12. CTRL PORT  __            CTRL PORT
#4. IDCU CLI    ________ 13. LSI0 EQSTAT _         22. LSI0 EQSTAT _
#5. EQL BAY     _        14. LSI1 EQSTAT _         23. LSI1 EQSTAT _
#6. EQL UNVER   __       15. LSI0 CLI    ________  24. LSI0 CLI    ________
#7. EQL AISLE   ____     16. LSI1 CLI    ________  25. LSI1 CLI    ________

                                ELI0                       ELI1
    MAP X                17. EQSTAT       _         26. EQSTAT       _
#9. PIDB LIMIT  __       18. CBL SERIES   _____     27. CBL SERIES   _____
    PASSWORD             19. CBL DISTANCE ___       28. CBL DISTANCE ___
```

```
eqidcu                          5ESS SWITCH
SCREEN 2 OF 3             OFFICE DATA ADMINISTRATION
(5846)                  INTEGRATED DIGITAL CARRIER UNIT

                          29. PIDB NUMBER (PIDB)

    PIDB PIDB            DI/    PIDB/      PIDB PIDB           DI/    PIDB/
ROW  NO. TYPE   EQSTAT PSU SHLF DFPOS  ROW  NO. TYPE  EQSTAT PSU SHLF DFPOS
 1    0  ____     _      _      __     7    6  ____     _      _      __
 2    1  ____     _      _      __     8    7  ____     _      _      __
 3    2  ____     _      _      __     9    8  ____     _      _      __
 4    3  ____     _      _      __    10    9  ____     _      _      __
 5    4  ____     _      _      __    11   10  ____     _      _      __
 6    5  ____     _      _      __    12   11  ____     _      _      __
```

```
eqidcu                          5ESS SWITCH
SCREEN 3 OF 3             OFFICE DATA ADMINISTRATION
(5846)                  INTEGRATED DIGITAL CARRIER UNIT

                          29. PIDB NUBMER (PIDB)

    PIDB PIDB            DI/    PIDB/      PIDB PIDB           DI/    PIDB/
ROW  NO. TYPE   EQSTAT PSU SHLF DFPOS  ROW  NO. TYPE  EQSTAT PSU SHLF DFPOS
13   12  ____     _      _      __    19   18  ____     _      _      __
14   13  ____     _      _      __    20   19  ____     _      _      __
15   14  ____     _      _      __    21   20  ____     _      _      __
16   15  ____     _      _      __    22   21  ____     _      _      __
17   16  ____     _      _      __    23   22  ____     _      _      __
18   17  ____     _      _      __
```

Figure 1 SAMPLE EQIDCU FORM 5E14 AND EARLIER SOFTWARE RELEASES

```
eqidcu                              5ESS Switch
SCREEN 1 OF 3                 OFFICE DATA ADMINISTRATION
(5846)                      INTEGRATED DIGITAL CARRIER UNIT

 *1. SM          001                    SG0                          SG1
 *2. IDCU        01          #12. CTRL GROUP  _             CTRL GROUP  _
  3. IDCU EQSTAT U           #13. CTRL PORT   __            CTRL PORT   __
 #4. IDCU CLI    00000000     14. LSI0 EQSTAT _          23. LSI0 EQSTAT _
 #5. EQL BAY       0          15. LSI1 EQSTAT _          24. LSI1 EQSTAT _
 #6. EQL UNVER   76           16. LSI0 CLI    ________   25. LSI0 CLI    ________
 #7. EQL AISLE   0000         17. LSI1 CLI    ________   26. LSI1 CLI    ________
  8. INTF UNIT   0
                                         ELI0                         ELI1
     MAPX       _             18. EQSTAT       _         27. EQSTAT       _
#10. PIDB LIMIT __             19. CBL SERIES   _____     28. CBL SERIES   _____
     PASSWORD   _              20. CBL DISTANCE ___       29. CBL DISTANCE ___
```

```
eqidcu                              5ESS Switch
SCREEN 2 OF 3                 OFFICE DATA ADMINISTRATION
(5846)                      INTEGRATED DIGITAL CARRIER UNIT

                          30. PIDB NUMBER (PIDB)
    PIDB PIDB        DI/     PIDB/     PIDB PIDB        DI/     PIDB/
ROW NO   TYPE EQSTAT PSUSHLF DFPOS ROW NO   TYPE EQSTAT PSUSHLF DFPOS
 1   0   _____  _     _      __     7   6  _____  _     _      __
 2   1   _____  _     _      __     8   7  _____  _     _      __
 3   2   _____  _     _      __     9   8  _____  _     _      __
 4   3   _____  _     _      __    10   9  _____  _     _      __
 5   4   _____  _     _      __    11  10  _____  _     _      __
 6   5   _____  _     _      __    12  11  _____  _     _      __
```

```
eqidcu                              5ESS Switch        _
SCREEN 3 OF 3                 OFFICE DATA ADMINISTRATION
(5846)                      INTEGRATED DIGITAL CARRIER UNIT

                          30. PIDB NUMBER (PIDB)
    PIDB PIDB        DI/     PIDB/     PIDB PIDB        DI/     PIDB/
ROW NO   TYPE EQSTAT PSUSHLF DFPOS ROW NO   TYPE EQSTAT PSUSHLF DFPOS
 13  12  _____  _     _      __    19  18  _____  _     _      __
 14  13  _____  _     _      __    20  19  _____  _     _      __
 15  14  _____  _     _      __    21  20  _____  _     _      __
 16  15  _____  _     _      __    22  21  _____  _     _      __
```

Copyright © 2006 Lucent Technologies

```
17  16  ____   _      _    __    23  22  ____   _      _    __
18  17  ____   _      _    __
```

Figure 2 SAMPLE EQIDCU FORM 5E15 AND LATER SOFTWARE RELEASES

Copyright © 2006 Lucent Technologies

SEC. 49: 5847 RECORD
IDCU FACILITY EQUIPMENT - EQIFAC

1. GENERAL

The 5847 Record is available with the 5E8 Software Release. It is used to initially provision and to support the growth of an IDCU (Integrated Digital Carrier Unit) Facility. The IFAC (IDCU Facility) is the connection between the IDCU and the RT (Remote Terminal) or PUB (Peripheral Unit Bus). A fully loaded IDCU system has four LSI (Loop Side Interface) packs (two LSI packs per Service Group). Each LSI pair terminates up to twenty IFACS, for a maximum of forty IFACs per IDCU.

Additional information about each IFAC which is defined on the EQIFAC form include: operational status, performance monitoring group, facility identification, suppression method and whether the IFAC is connected to an RT or to a PUB which includes switched or non-switched special circuits (burglar or fire alarms, ATM circuits, etc). Ports cannot be assigned through IDCU equipment unless the related IFACs are in the operational state on the EQIFAC form.

IFACs defined on the EQIFAC form may be attached to either RTs or to PUBs (i.e., PUB43801). IFACs defined on the EQIFAC form with the PUB43801 field set to "N" may be connected to RTs or reserved for later remote terminal use. An RT must be defined on the RTERM form (5174 Record).

IFACs defined on the EQIFAC form with the PUB43801 field set to "Y" may be connected to special circuit facilities such as DACS or reserved for later use. Special circuit facilities can be defined on the LINE form (5109 Record) directly from IFACs defined on the EQIFAC form.

Performance thresholds allowed for an IFAC (IDCU facility) are defined in the PM GRP (Performance Monitoring Group) field on the EQIFAC form. The office default threshold value is FACDEF. If a unique range is required for a given IFAC, a new PM GRP name is defined on the PMTHRESH form (5948 Record).

1.1 EQIDCU Requirements

Related IDCU equipment must be defined on an EQIDCU form (5846 Record) before an EQIFAC form is defined.

1.2 RTERM Requirements

Remote Terminals of type TR008 or TR303 are defined on the RTERM form (5174 Record). The TR008 remote terminal can have from 1 to 5 IFACs connected and will handle up to 96 analog lines. The TR303 remote terminal can have from 2 to 28 IFACs connected and will handle up to 2048 analog and ISDN lines.

After the related EQIDCU, EQIFAC and RTERM forms are defined and in the operational state, analog IDCU ports can be defined on the LINE (5109 Record), MLHLN (5111 Record), and TRUNK (5204 Record) forms. ISDN IDCU ports can be defined on the DSL form (5902 Record) or the DSLUSR form (5908 Record). PUB ports are defined on the LINE form.

1.3 Carrier Group Alarm Hash Indexes

The CGA (Carrier Group Alarm) data is associated with the VT/DS1 and STE/STS facilities. For 5E9(2) and later, only 522 hash indexes are available per switching module. One hash index is allocated to each instance of the following for a specific SM:

- 1 per each pair STE/STS on a specified SM (EQSTE form). (The EQSTE form is associated with the DNU-S.)

Copyright © 2006 Lucent Technologies

- 1 per each VT (Virtual Tributary) on a specified SM (EQVT form). (The EQVT form is associated with the DNU-S.)
- 1 per each DFI (Digital Facility Interface) of a DLTU (Digital Line/Trunk Unit) where FAC IND is 0 or 1, and DFI TYPE is not "H1" or "H2", i.e. DFI USAGE of "H1" and "H2" are not counted (EQDUP form). (The EQDUP form is associated with DLTU.)
- 1 per each DFI-2 (2 per EQDUP form) where FAC IND is 3. (The EQDUP form is associated with DLTU.)
- 1 per pack - POS, EQST, CLI, CLEI combination. (30 packs per DCLU on EQDCLP form) (The EQDCLP form is associated with DCLU.)
- 1 per IFAC - EQSTAT, SUP MTHD, PUB43801 combination. (20 per IDCU on the EQIFAC form) (The EQIFAC form is associated with IDCU.)

The sum of the above total number of allocated hash indexes (instances) cannot be greater then 522 for any one specific SM.

1.4 Recent Change View

The corresponding Recent Change View for this form is 20.23.

2. FORM AND RECORD ENTRIES

2.1 BASE AND CONTROL, ESS UNIT

Enter the Base and Control Number and the Office Name on each record.

2.2 * SM

Description: Enter the Switching Module identification number.

Required Field.
Valid Entries: 1 - 192

Data Rules:

For each SM assignment, there must be a corresponding EQIM form (5700 Record).

2.3 * IDCU

Description: Enter the IDCU identification number.

Required Field.
Valid Entries: 0 - 7

Data Rules:

IDCUs share the same unit number range with Line Units, (R) ISLUs and DCLUs. Therefore, unit numbers assigned on this form may not be assigned on any EQLU, EQISLU, EQRISLU, or EQDCLU form with the same SM number.

Copyright © 2006 Lucent Technologies

2.4 * LSI

Description: Enter the Loop Side Interface circuit number identification.

Required Field.
Valid Entries: 0 or 1

Data Rules:

If an IFAC position (0 - 19 for LSI 0, and 20-39 for LSI 1) is specified, EQSTAT and LSI must be entered.

IFAC

The following fields (Section 2.5 - Section 2.9) are rows in the IFAC field group used to define the IDCU facility (DS1) connections. From 1 to 20 IFACs can be connected to each LSI on the IDCU. If any field in an IFAC row is specified, then EQSTAT, SUP MTHD and PUB43801 must be specified.

NOTE: The IFAC fields are completed by the switch owner. The switch owner will determine what type of interface is required for the remote equipment connected to the IDCU.

2.5 EQSTAT

Description: Enter the status of the equipment.

Valid EQSTAT Entries

Entry	Description
G	Growth.
O	Operational.
U	Unequipped.

NOTE: Only "O" is allowed in new offices and equipment additions.

Data Rules:

If EQSTAT is "G" or "O", a corresponding EQIDCU form (5846 Record) must exist with LSI EQSTAT defined as shown in the following table.

Valid LSI/EQSTAT Combinations

IFAC EQSTAT	LSI	IFAC NUM	IFAC	EQIDCU LSI EQSTAT
G	0	0 - 19	0 - 19	LSI0 = G,O
O	0	0 - 19	0 - 19	LSI0 = O
G	1	0 - 19	20 - 39	LSI1 = G,O
O	1	0 - 19	20 - 39	LSI1 = O

For 5E9(2) and later, see paragraph Section 1.3 on Carrier Group Alarms.

2.6 PM GRP

Description: Enter the group name of the Performance Monitoring threshold.
Valid Entries: 1 - 8 characters

Data Rules:

When PM GRP is entered, a corresponding PMTHRESH form (5948 Record) must exist with PM TYPE of "IFAC".

Copyright © 2006 Lucent Technologies

If PM GRP is not entered, the office default of FACDEF for IFAC is used. If the office default for IFAC is not defined, the generic default of /FACGDEF for IFAC is used.

2.7 FACILITY ID

Description: Enter the IDCU facility identifier.
Valid Entries: 1 - 25 characters

2.8 SUP MTHD

Description: Enter the Suppression Method.

Valid SUP MTHD Entries

Entry	Description
D4	IDCU to PUB43801, D4 ZCS mode. 56K restricted transmission; cannot send zero bytes, D4, rob-bit, with ZCS (see Note below).
FE8Z	IDCU to PUB43801, FE B8ZS mode. 56K clear channel transmission; can send zero bytes, Fe, rob-bit, with B8ZS. FE8Z is the recommended SUP MTHD for CCS7 and Primary Rate Interface trunks utilizing extended super frame format with B8ZS.
64K	IDCU to PUB43801, D4 B8ZS mode. 64K clear channel transmission; can send zero bytes, Fe, with B8ZS. This value is the same as FE8Z, except rob-bit is disabled by nail-up software.
FEB7	IDCU to PUB43801, FE ZCS mode. 56K restricted transmission; cannot send zero bytes, Fe, rob-bit, with ZCS (see Note below).
TR8ZC	IDCU to TR008, ZCS mode. This mode is used in TR008 RTs that are remoted over 24-channel facilities which require ZCS. These 24-channel facilities include: Fs, ZCS, CCS, and 4K data links. (See SUP MTHD Note: below.)
TR8B8	IDCU to TR008, B8ZS mode. This mode is used in TR008 RTs that are remoted over 24-channel facilities which require B8ZS. These 24-channel facilities include: Fs, B8ZS, CCS, and 4K data links. (See SUP MTHD Note: below.)
303ZC	IDCU to TR303, ZCS mode. This mode is used in TR303 RTs that are remoted over 24-channel facilities which require ZCS. These 24-channels include: Fe, ZCS, CCS, and 4K data links. (See SUP MTHD Note: below.)
303B8	IDCU to TR303, B8ZS mode. This mode is used in TR303 RTs that are remoted over 24-channel facilities which require B8ZS. These 24-channel facilities include Fe, B8ZS, CCS, and 4K data links. (See SUP MTHD Note: below.)

NOTE: Applications that do not send signaling along the same path as data, e.g., ISDN and CCS7, automatically upgrade a 56K data rate to 64K. The 5ESS Switch application software upgrades the data rate to 64K by disabling rob-bit signaling on a per-channel basis. (Rob-bit signaling is the method traditionally used by trunks to send control signals along the same path as data. When an application such as ISDN or CCS7 sends the signal along another route, the rob-bit signaling is inhibited, reclaiming the PCM bits "robbed" for signaling, and increasing the data rate to 64K.)

Data Rules:

When the IFAC defined on this form is assigned to an RT INTERFACE of "TR008" on the RTERM form (5714 Record), SUP MTHD must be "TR8ZC" or "TR8B8" on this form.

When the IFAC defined on this form is assigned to an RT INTERFACE is "TR303" on the RTERM form (5714 Record), SUP METHOD must be "303ZC" or "303B8" on this form.

If ISDN service is planned for this TR303, SUP MTHD must be "303B8".

The SUP METHOD defined for a "TR303" or a "TR008" RT must have IFACS of the same SUP METHOD

Copyright © 2006 Lucent Technologies

assigned on the RTERM form.

NOTE: As with all transmission facility connections, the SUP MTHD must be consistent across all equipment used throughout the connection from the RT to the 5ESS Switch. For example, for an RT with a SUP MTHD set to "ZCS" or "B8ZS", the type of transmission equipment used (e.g., T1 line repeaters, multiplexers, and fiber links) must be compatible (and optioned) with ZCS or B8ZS signaling, respectively, as well as the 5ESS Switch.

If PUB43801 is "Y", enter "FEB8", "FE8Z", "D4", or "64K".

If PUB43801 is "N", enter "TR8ZC", "TR8B8", "303ZC", or "303B8".

2.9 PUB43801

Description: Is this IDCU facility used on a PUB43801 interface?
Valid Entries: Y, N

Data Rules:

If PUB43801 is "Y", the IFAC (number) cannot be defined on the RTERM form (5174 Record).

```
eqifac                          5ESS SWITCH
SCREEN 1 of 3             OFFICE DATA ADMINISTRATION
(5847)                  IDCU FACILITY EQUIPMENT (IFAC)

*1. SM   004
*2. IDCU 4
*3. LSI  0
                                     4. IFAC

ROW NUM EQSTAT  PM GRP              FACILITY ID           SUP MTHD  PUB43801
 1   0    G    FACDEF         IFAC=4-4-0                  TR8ZC       N
 2   1    G    FACDEF         IFAC=4-4-1                  TR8ZC       N
 3   2    _    ________       ___________________________   ______      _
 4   3    _    ________       ___________________________   ______      _
 5   4    _    ________       ___________________________   ______      _
 6   5    _    ________       ___________________________   ______      _
```

```
eqifac                          5ESS SWITCH
SCREEN 2 OF 3             OFFICE DATA ADMINISTRATION
(5847)                  IDCU FACILITY EQUIPMENT (IFAC)

                                     4. IFAC

ROW NUM EQSTAT  PM GRP              FACILITY ID           SUP MTHD  PUB43801
 7   6    _    ________       ___________________________   ______      _
 8   7    _    ________       ___________________________   ______      _
 9   8    _    ________       ___________________________   ______      _
10   9    _    ________       ___________________________   ______      _
```

```
11  10    _    ________       ___________________________    ______       _
12  11    _    ________       ___________________________    ______       _
13  12    _    ________       ___________________________    ______       _
```

```
eqifac                          5ESS SWITCH            _
SCREEN 3 OF 3             OFFICE DATA ADMINISTRATION
(5847)                  IDCU FACILITY EQUIPMENT (IFAC)

                                  4. IFAC

ROW NUM EQSTAT  PM GRP              FACILITY ID           SUP MTHD  PUB43801
14  13    _    ________       ___________________________    ______       _
15  14    _    ________       ___________________________    ______       _
16  15    _    ________       ___________________________    ______       _
17  16    _    ________       ___________________________    ______       _
18  17    _    ________       ___________________________    ______       _
19  18    _    ________       ___________________________    ______       _
20  19    _    ________       ___________________________    ______       _
```

Figure 1 SAMPLE EQIFAC FORM 5E8 AND LATER SOFTWARE RELEASES

Copyright © 2006 Lucent Technologies

SEC. 50: 5848 RECORD CONTROL INTERFACE - EQCI

1. GENERAL

The 5850 Record is available with the 5E9(2) and later Software Releases. It is used to define PICBs (Peripheral Interface Control Buses). In the SM-2000 class processors, the CI is similar to the CI in the SM. The PICB allows the SMP (Switching Module Processor) to send messages to and get responses from the peripheral units. One CI is required in an SM-2000. The major difference between the CI in the SM-2000 class processors and in the SM is that the SM-2000 processors allow for up to 4 active CIs. This allows for a maximum of 92 PICBs.

1.1 Recent Change View

The corresponding Recent Change View for this form is 18.2.

2. FORM AND RECORD ENTRIES

2.1 BASE AND CONTROL, ESS UNIT

Enter the Base and Control Number and Office Name on each record.

2.2 *SM

Description: Enter the Switching Module number.

Required Field.
Valid Entries: 1 - 192

2.3 *MC

Description: Enter the Module Control number.

Required Field.
Valid Entries: 0 - 1

2.4 INTF UNIT

Description: Enter the Interface Unit number. This field was added to support the 5E15 Optically Extended Control and Data Unit feature. See Division 2, Section 9V.

Required Field.
Valid Entries: 0 - 8

Data Rules:

When INTF UNIT is greater than 0, it must be defined on the EQXCDU form (5853 Record) for the same Switching Module. In addition, the EQSTAT value on the EQCI must not exceed the MOD CTL SG0/1 EQSTAT on the EQXCDU form. (EQSTAT of "O" is greater than EQSTAT of "G", and EQSTAT of "G" is greater than EQSTAT of "U".)

2.5 *CI

Copyright © 2006 Lucent Technologies

Description: Enter the Control Interface group number.

Required Field.

Valid CI Entries	
Entry	**Definition**
0 - 1	SM.
0 - 3	SM-2000 class procesors.

Data Rules:

The Control Interface numbers assigned on this form must have an associated CONTROL GROUP number defined on an equipment form.

CI values for an SM with an SM-2000 class processor must be entered in pairs, for MC 0 and MC 1.

CI pairs entered on this form for an SM-2000 class processor must be entered in sequential order (CI 0 must be entered before CI 1).

If CI is 0 - 1 (SM), the CI pair for CI 0 must be entered.

If CI is 0 - 3 (SM-2000 class processor), the CI pair for CI 0 must be entered.

If CI is 2 or 3, the corresponding EQIM form must have UNIT TYPE set to an SM-2000 class processor.

For RSMs which are not equipped with SM-2000 class processors, the CI pair for CI 0 and CI 1 must be entered.

2.6 EQSTAT

Description: Enter the status of the unit.

Required Field.
Default: O
Valid Entries:

Valid EQSTAT Entries	
Entry	**Definition**
G	Growth.
O	Operational.
U	Unequipped.

Data Rules:

The EQSTAT value assigned on this form must equal or be greater than ("O" is greater than "G", which is greater than "U") the EQSTAT value on a corresponding equipment form.

2.7 #CLI

Description: This is the Change Level Indicator. Prior to 5E11, this was a Recent Change only field. For 5E11 and later, this field was changed to a entry field.
Valid Entries: 5E10: non-entry 5E11 and later: 0 or 1

See the EQCI form in Division 8, Section 1.

Copyright © 2006 Lucent Technologies

```
eqci                                5ESS Switch            _
                            OFFICE DATA ADMINISTRATION
(5848)                          CONTROL INTERFACE

*1. SM     ___
*2. MC     _
*3. CI     _
 4. EQSTAT O
    CLI
```

Figure 1 SAMPLE EQCI FORM 5E14 AND EARLIER SOFTWARE RELEASES

```
eqci                                5ESS Switch            _
                            OFFICE DATA ADMINISTRATION
(5848)                 CONTROL INTERFACE (SM & RSM MODULES)

*1. SM        001
*2. MC        1
*3. INTF UNIT 0
*4. CI        _
 5. EQSTAT    O
#6. CLI       ________
```

Figure 2 SAMPLE EQCI FORM 5E15 AND LATER SOFTWARE RELEASES

Copyright © 2006 Lucent Technologies

SEC. 51: 5849 RECORD DATA INTERFACE - EQDI

1. GENERAL

The 5849 Record is available with the 5E9(2) and later Software Releases. It is used to define both DIs (Data Interfaces) for the SM, and DXs (Data EXpansion) for the SM-2000 class processors. For SM-2000 class processors, the DX (Data EXpansion) terminates PIDBs (Peripheral Interface Data Buses) from peripheral units as does the DI (Data Interface) in the SM.

Like the DIs in the SM, the DXs are duplicated within the MCTSI (Module Control Time Slot Interchanger)—that is, the PCT (Peripheral Control and Timing) link to the TSI is not duplicated. The PIDB connections to the DX(s) in each MCTSI provide for duplication from the peripheral units. Any unit that requires PIDBs will impact the ports on the DXs. With a maximum of 6 DXs, there is a total of 144 PIDB ports (6 * 24) in the SM-2000. One DX is always required for LDSUF (DSU3, 2 DSC3 packs) in the SM-2000. Up to 6 DXs may be equipped. The table below shows the impact of the peripheral units on the DX ports compared to the DI in the SM.

EQUIPMENT	SM	SM-2000
LDSUF	0	4/DSC3 2DSC3 required
LU3	2	2
DLTU2	1-20	1-20
MMSU	0	0
DCTU	0	0
DNU-S	N/A	0
PIDB Ports	31 (on 2 DI)	24-144 (on -1 - 6 DX)

1.1 Recent Change View

The corresponding Recent Change View for this form is 18.3.

2. FORM AND RECORD ENTRIES

2.1 BASE AND CONTROL, ESS UNIT

Enter the Base and Control Number and Office Name on each record.

2.2 *SM

Description: Enter the Switching Module number.

Required Field.
Valid Entries: 1 - 192

2.3 *MC

Description: Enter the Module Controller number.

Required Field.
Valid Entries: 0 or 1

2.4 *INTF UNIT

Copyright © 2006 Lucent Technologies

Description: Enter the Interface Unit number. This field was added to support the 5E15 Optically Extended Control and Data Unit feature. See Division 2, Section 9V.

Required Field.
Valid Entries: 0 - 8

Data Rules:

When INTF UNIT is greater than 0, it must be defined on the EQXCDU form for the same Switching Module. In addition, the EQSTAT value on the EQDI must not exceed the MOD CTL SG0/1 EQSTAT on the EQXCDU form (5853 Record). (EQSTAT of "O" is greater than EQSTAT of "G", and EQSTAT of "G" is greater than EQSTAT of "U".)

The SM/INTF UNIT/DATA GRP combinations entered on this form must be defined on a EQDI form or a EQXCDU form. Also, the EQSTAT on the matching EQDI or EQXCDU form must be greater than or equal to the equipment status value ("O", "G", or "U") on this form (e.g., "O" is greater than "G" which is greater than "U"). Note also that when INTF UNIT is greater than 0 and DATA GRP is 0, these Data Groups are defined on the EQXCDU form.

2.5 *DI

Description: Enter the Data Interface number.

Required Field.

Valid DI Entries

Entry	Definition
0 - 1	
0 - 5	SM-2000 class processors.

Data Rules:

For SMs not equipped with SM-2000 class processors, the DI values for DI 0 and DI 1 must be entered, and must be entered in pairs (for both MC of 0 and MC of 1), and must be entered sequentially (DI pair for DI 1 cannot be entered) before DI pair has been entered.

If DI is 2 - 5, or TSI BOARD and TSI SLOT are entered, the corresponding EQIM form must have UNIT TYPE set to an SM-2000 class processor.

For SMs with UNIT TYPE set to "SM2000", the TSI BOARD must be 0 and TSI SLOT must be 1.

2.6 EQSTAT

Description: Enter the status of the unit.

Required Field.
Default: O
Valid Entries:

Valid EQSTAT Entries

Entry	Definition
G	Growth.
O	Operational.
U	Unequipped.

Copyright © 2006 Lucent Technologies

2.7 #CLI

Description: Enter the Change Level Interface value.

Required Field.
Valid Entries: 0 - 7ffffffff (hex)

Data Rules:

For 5E11 and later,

if an SM-2000 class processor is defined on the EQIM form, the CLI value entered must be 10 hex, if bit 4 of the TSICOM 0 CLI/TSICOM 1 CLI is set on the corresponding EQIM form. Otherwise the CLI value entered must be 0.

if an SM-2000 class processor is not defined on the EQIM form, the CLI must equal the IMPU CONTROLLER 0 or 1 CLI (depending on an MC value of 0 or 1) entered on the EQIM form.

SM-2000 CLASS PROCESSORS

The following fields (Section 2.8 - Section 2.9) are used to define SM-2000 configurations.

2.8 TSI BOARD

Description: Enter the Time Slot Interchange Board.
Valid Entries: 0 - 9

Data Rules:

The combination of TSI BOARD and TSI SLOT on the EQDI form must be duplicated for each pair of DI values (i.e., when defining this DI on this SM for an MC of 0 and an MC of 1, the TSI BOARD and TSI SLOT must be the same.

For 5E14 and earlier, the combination of TSI BOARD and TSI SLOT entries on the EQDI form, the EQDNUS form, the EQOIUP form, the EQPSU form, and/or EQNLI form must not be duplicated on any other EQDI form (except if entered as the second of a DI pair), on the same or any other EQNLI form, or any EQPSU form, oa any EQDNUS form for a given SM.

For 5E15 and later, the combination of TSI BOARD and TSI SLOT entries on the EQDI form, EQDNUS form, EQIWG form, EQPDXU form, EQPSU form, EQPCTP form, EQXCDU form, and/or the EQNLI form, must not be duplicated on any other EQDI form (except if entered as the second of a DI pair) on the same or any other EQNLI form, on the same or any other EQPDXU form (except when entering a PCTDX1 entry on the EQPDXU form where the XAIU CONFIG field on the EQPDXU form is equal to "LOW"), or on any of the following forms for a given SM:

EQOIUP (5E16(2) and later)
EQPSU,
EQPCTP,
EQDNUS, or
EQXCDU.

For 5E16(2) and later, the combination of TSI BOARD and TSI SLOT entries on the EQDI form, the EQDNUS

Copyright © 2006 Lucent Technologies

form, the EQOIUP form, the EQPSU form, and/or EQNLI form must not be duplicated on any other EQDI form (except if entered as the second of a DI pair), on the same or any other EQNLI form, or any EQPSU form, oa any EQDNUS form for a given SM.

2.9 TSI SLOT

Description: Enter the Time Slot Interchange Slot number.
Valid Entries: 0 - 3

For 5E10 and later, when TSI SLOT is 0, TSI BOARD must not be 0.

```
eqdi                              5ESS Switch            _
                            OFFICE DATA ADMINISTRATION
(5849)                            DATA INTERFACE

*1. SM     ___
*2. MC     _
*3. DI     _
 4. EQSTAT O
#5. CLI    ________

      SM2000
 6. TSI BOARD _
 7. TSI SLOT  _
```

Figure 1 SAMPLE EQDI FORM 5E14 AND EARLIER SOFTWARE RELEASES

```
eqdi                              5ESS Switch            _
                            OFFICE DATA ADMINISTRATION
(5849)                            DATA INTERFACE

*1. SM        001
*2. MC        1
*3. INTF UNIT 0
*4. DI        _
 5. EQSTAT    O
#6. CLI       ________

     SM2000
 7. TSI BOARD _
 8. TSI SLOT  _
```

Copyright © 2006 Lucent Technologies

Figure 2 SAMPLE EQDI FORM 5E15 AND LATER SOFTWARE RELEASES

SEC. 52: 5850 RECORD
TIME SLOT INTERCHANGE EQUIPAGE (SM-2000 MODULES) - EQTSI

1. GENERAL

The 5850 Record is available with the 5E9(2) and later Software Releases. It is used to define the Time Slot Interchange equipage for SM-2000 class processors. SMs equipped with SM-2000 class processors must have at least one pair of EQTSI forms entered with TSI BOARD set to 0. At least one TSI Board (Board 0) is required for each SM-2000 class processor. Up to 10 TSI Boards (also referred to as TSI Slices) can be assigned.

1.1 Recent Change View

The corresponding Recent Change View for this form is 18.17.

2. FORM AND RECORD ENTRIES

2.1 BASE AND CONTROL, ESS UNIT

Enter the Base and Control Number and Office Name on each record.

2.2 *SM

Description: Enter the Switching Module number.

Required Field.
Valid Entries: 1 - 192

Data Rules:

SM-2000 units must be defined on the EQIM form (5700 Record) using the UNIT TYPE field.

SMs equipped with SM-2000 class processors must have at least one pair of EQTSI forms entered with TSI BOARD set to 0.

2.3 *MC

Description: Enter the Module Controller number.

Required Field.
Valid Entries: 0 - 1

2.4 *TSI BOARD

Description: Enter the Time Slot Interchange Board number. Each TSI BOARD value per SM must be entered for both an MC of 0 and an MC of 1. Each TSI board terminates up to 4 TSI links. TSI boards must be grown sequentially. See Figure 1.

Required Field.
Valid Entries: 0 - 9

Data Rules:

Copyright © 2006 Lucent Technologies

TSI BOARD values must be entered in pairs.

TSI Board 0 must be entered before TSI Board 1.

2.5 EQSTAT

Description: Enter the status of the equipment.

Required Field.
Default: O
Valid Entries:

Valid EQSTAT Entries	
Entry	**Definition**
G	Growth.
O	Operational.
U	Unequipped.

Data Rules:

The EQSTAT value for the EVEN NLI TSI BOARD on the EQNLI form (5853 Record) must equal or be greater than ("O" is greater than "G", which is greater than "U") the EQSTAT value on this form.

2.6 #CLI

Description: Enter the Change Level Indicator value. See Division 8, Section 1 of the TG-5 for CLI values.

Required Field.
Valid Entries: 7fffffff (hex)

FIXED ASSIGNMENTS TO THE TSI ON AN SM2000				
TSI BOARD/SLICE	**TSI SLOT/LINK**	**USE**	**INDEX**	**COMMENTS**
0	0	MCP	0	Always required
0	1	DX	0	Always required
0	2	NLI	0	Always required in non VCDX (see NOTE)
0	2	LOOP	0	Always required in VCDX (see NOTE)
0	3	NLI	1	Always required in non VCDX

Note: The NLI and LOOP usage of SLOT 2 on BOARD 0 is mutually exclusive.
Figure 1 FIXED ASSIGNMENTS TO THE TSI ON THE SM2000

```
eqtsi                          5ESS Switch
                         OFFICE DATA ADMINISTRATION
(5850)         TIME SLOT INTERCHANGE EQUIPAGE (SM2000 MODULES)

*1. SM        ___
*2. MC        _
*3. TSI BOARD _
 4. EQSTAT    O
#5. CLI       ________
```

Copyright © 2006 Lucent Technologies

Figure 2 SAMPLE EQTSI FORM 5E9(2) AND LATER SOFTWARE RELEASES

SEC. 53: 5851 RECORD
TMS LINK EQUIPAGE - EQTMSLINK

1. GENERAL

The 5851 Record is available with 5E9(2) and later Software Releases. For 5E9(2) and later, the 5851 Record is used instead of the EQORMLINK form (5813 Record). It is used to translate the TMS (Time Multiplexed Switch) links for the ORM (Optical Remote Module), the SM-2000, and the EXM-2000 (SM-2000 ORM).

This form is not required for an SM or an RSM (Remote Switching Module). However, this form replaces the EQORMLINK form for ORM applications. Particular fields on this form are unique to ORM/EXM-2000; they are identified in the field description.

For each odd QLI board on a given TMS SHELF, the preceding QLI board must be the same QLI type (i.e., if board 3 on TMS SHELF 0 is a QLI1, then QLI Board 2 on TMS SHELF 0 must be a QLI1). See Figure 2. The TMS LINKS are defined on the EQTMSLINK form for SM-2000 class processors and ORMs. The TMS LINKS for local SMs and host SMs are defined on the EQIM form (5700 Record).

Data Rules:
For 5E12 and later, SM(s) assigned on the EQIM input form where SM USAGE equals "ORM" and the processor is not an SM-2000 class processor, there can be no more than four EQTMSLINK input forms matching the SM on the EQIM input form.

1.1 Recent Change View

The corresponding Recent Change View for this form is 17.12.

2. FORM AND RECORD ENTRIES

2.1 BASE AND CONTROL, ESS UNIT

Enter the Base and Control Number and Office Name on each record.

2.2 *SIDE

Description: This field identifies the CM2 side of the link between the CM2 and the SM-2000. Enter the Controller Module number.

Required Field.
Valid Entries: 0 or 1

Data Rules:

A side 0 and a side 1 EQTMSLINK form must be entered for each TMS link.

2.3 * TMSFP NUM

Description: This field indicates the Time Multiplex Switch Fabric Pair number.

Required Field.

Software Release: 5E16(2) and later
Valid Entries:

Copyright © 2006 Lucent Technologies

0 for CM2
0 - 3 for CM3

Data Rules:

When office has a CM2, TMSFP NUM must be 0.

When TMSFP NUM is entered, the value entered must be defined on the EQTMS form (5866 Record).

2.4 *TMS LNK

Description: The TMS LNK field was changed to LINK for 5E15 and later. See LINK below for usage information.

2.5 *LINK

Description: Prior to 5E15, the name of this field was TMS LNK. Enter the Time Multiplexed Switch Link number. For SM-2000 class processors, with a single fabric CM2, use 8 to 31 and 38 to 189; for SM-2000 class processors with a dual fabric CM2, use 6 to 381. See Figure 1.

Required Field.
Valid Entries:

For 5E14 and earlier, 2 - 381
For 5E15 and later, for CM2
Single Fabric: 2 - 189
Dual Fabric: 2 - 381
For 5E15 and later, for CM3: 4 - 371

Data Rules:

For SM-2000 and EXM-2000, the TMS LNK value entered on this form must have a corresponding value entered or derived on an EQNLI form (5853 Record) with a matching SM entry.

When a combination of TMSFP NUM and LINK entries are entered (or derived from an EQNLI form), the corresponding QLI CLI must match all other QLI CLI entries associated with other TMSFP NUM and LINK values on that same EQNLI form.

When a TMS LNK entry for a SIDE of 0 has a corresponding TRCCKT/TRCUNUM entry, the matching EQTMSLINK form for a SIDE of 1 must have the same TRCUNUM entry, and its TRCCKT entry must equal the TRCCKT entry for side 0 plus 1.

TMS LNK entries must have an associated entry on the EQCMTRCU form (5812 Record). For every ORM which is not an EXM-2000, the TRCU NUMBER entered on this form must exist as TRCU NUMBER on an associated EQCMTRCU form and SM must be 0.

For 5E15 and later, the TMSFP NUM and LINK combination on the EQTMSLINK form associated with an SM which is equipped with an SM2000 class processor must match a TMSFP NUM and EVEN/ODD NLI TMS LINK 0 value entered, or a TMSFP NUM and EVEN/ODD NLI TMS LINK 1 value derived on an EQNLI form. (NOTE: TMS LINK 1 values are NOT derived for CDX SM2000 or for optically remoted SM2000s.)

For 5E12 and later, each LINK entry on the EQTMSLINK form must have a matching EQTMSLINK form

Copyright © 2006 Lucent Technologies

defined for the same SIDE and TMSFP NUM for LINK plus 1. Each odd LINK entry on the EQTMSLINK form must have a matching EQTMSLINK form defined for the same SIDE and TMSFP NUM for LINK minus 1.

For 5E13 and later, when the TMS LNK is set to 8-11, 16-19, or 24-27, and the QLICLI is 100, the NCT EVEN LINK of 6 and 7, 14 and 15, or 22 and 23 on the EQIM form must not be on the QLI1 board. Note also the following conditions:

A QLICLI value of 0 on the EQTMSLINK form represents a QLI1 board.

A QLICLI value of 100 on the EQTMSLINK form represents a QLI2 board.

When IMTYPE is not "ORM" and UNIT TYPE is not "SM2000" on the EQIM form, a QLI1 board is used.

When IMTYPE is "ORM" on the EQIM form, QLICLI on the EQTMSLINK form is used where NCT EVEN LINK matches TMSLNK on the EQTMSLINK form.

Also note that not all TMS link assignments are represented on the EQTMSLINK form. Some TMS link assignments are only represented on the EQIM form as an NCT EVEN LINK. All TMS links for SM-2000 and ORMs are represented on the EQTMSLINK form. All TMS links for non-SM-2000s that are also not ORMs are represented only as an NCT EVEN LINK on the EQIM form. (If an error message is encountered, the text of the message (pcd51) will indicate the TMS link assignment in error.)

For 5E15 and later:

TMSFP NUM and LINK values must be entered in pairs on the EQTMSLINK form. These LINK values must be defined on an EQTMSLINK form for both SIDE 0 and SIDE 1, and the SM must be the same on both forms.

Each LINK entry on the EQTMSLINK form associated with an SM which is equipped with an SM-2000 class processor, must match an EVEN/ODD NLI TMS LINK 0 value entered or EVEN/ODD NLI TMS LINK 1 value derived on an EQNLI form (5853 Record).

Each even LINK entry on the EQTMSLINK form must have a matching EQTMSLINK form defined for the same SIDE for LINK + 1. And each odd LINK entry on the EQTMSLINK form must have a matching EQTMSLINK form defined for the same SIDE for LINK - 1.

When a LINK value on the EQTMSLINK form is entered or derived on an EQNLI form, then the QLI CLI entry on the EQNLI form, must match all other QLI CLI entries associated with other LINK values on that same EQNLI form.

When CM VINTAGE on the EQCORE form is 2, the LINK values entered on the EQTMSLINK form where LINK TYPE is not "NCT1" must meet the following criteria:

Use the TMSFP NUM value to find the corresponding EQTMS form. If FABRIC TYPE is "SNGL" then LINK must not equal 2, 3, 32 or 33

Use the TMSFP NUM value to find the corresponding EQTMS form. If FABRIC TYPE is "DUAL" then LINK must not equal 2, 3, 4 or 5.

2.6 LNKTYPE

Description: The Link Type field is a Recent Change Only field. The name of this field is being changed to LINK TYPE for 5E15 and later.

Copyright © 2006 Lucent Technologies

2.7 #LINK TYPE

Description: Prior to 5E15, the name of this field was LNKTYPE and it was a Recent Change only field. For 5E15 and later it is used as a data format for the Time Mulitplexed Switch Link.
Valid Entries: NCT1 or NCT2

Data Rules:

When an office is equipped with CM2 and QLI CLI is 100h, then LINK TYPE must be "NCT2".

LINK TYPE must be "NCT1" for a CM2 where QLI CLI is not 100h.

When CM VINTAGE is 3 on the EQCORE form, the LINK TYPE on the EQTMSLINK form must be "NCT1" when either:

The SM is not an SM2000

The SM is an SM2000, the corresponding EQIM form's SM USAGE is "ORM" and the NLI for this LINK has a TRCU PATH HOST TYPE other than "TRCU3" on the EQTRCUPTH form. The EQNLI form contains the TMS LINK number for each NLI.

An NCT link can be viewed as the physical connection between the TMS and an SM. Prior to SM-2000, all non-remote SMs used NCT1 links with bandwidth equivalent to a single TMSLNK. Most SM-2000s, on the other hand, are connected to the TMS via NCT2 links which provide twice the bandwidth. Each NCT2 link is therefore associated with two TMSLNKs, and (at least) twice as many TMSLNKs must be allocated for an SM-2000 as a non-SM-2000.

In the following case(s), SM-2000s are still connected to the TMS via NCT1 (rather than NCT2) links:

- SM-2000s that are remoted via transmission rate converter unit model 2 (TRCU2) hardware.
- an SM-2000 in a communication module model 2 compact (CM2C) office.

2.8 #QLI CLI

Description: Enter the Quad Link Interface CLI value.

Required Field.
Valid Entries: 0 - 7fffffff (hex)

Data Rules:

The QLI CLI entered must match all other QLI CLI entries associated with this TMS LNK.

If UNIT TYPE is set to a SM-2000 class processor on the corresponding EQIM form and the EQCORE form as a CM2 Compact value of "Y", the QLI CLI must be 0.

If UNIT TYPE is set to a SM-2000 class processor and SM USAGE is not "ORM", and the EQCORE form has

Copyright © 2006 Lucent Technologies

a CM2 Compact value of "N", QLI CLI must be 100 on the form.

For 5E15 and later, when an office is equipped with CM3, QLI CLI must be set to 0 and LINK must be greater than or equal to 4, and less than or equal to 371.

See Division 8, Section 1 for CLI values.

2.9 #SM

Description: Enter the Switching Module number.

Required Field.
Valid Entries: 1 - 192

2.10 EQSTAT

Description: Enter the status of the TMS LNK unit.

Required Field.
Default: O
Valid Entries:

Valid EQSTAT Entries

Entry	Definition
G	Growth.
O	Operational.
U	Unequipped.

Data Rules:

Initial offices must have EQSTAT set to "O".

2.11 TRCU PATH

Description: This is a no change field showing the TRCU path index associated with this TMS link. For more information, see Division 2, Section 9N.

2.12 TRCCKT

Description: Enter the Transmission Rate Converter Unit Circuit number. For 5E12 and later, to support TRCU3, this field is now on the EQTRCUPATH form and is called HOST CKT.

Software Release: 5E11 and earlier
Valid Entries: 0 - 3

Data Rules:

When either TRCCKT, TRCUNUM, or TRCCLI is entered, all must be entered.

TRCCKT, TRCUNUM, and TRCCLI must be entered when SM USAGE on the EQIM form is "ORM" (for ORMs and EXM-2000s); otherwise this field must be blank.

The combination of TRCCKT and TRCUNUM must not be duplicated on any other EQTMSLINK form except when entering the second of a TMS LNK pair.

Copyright © 2006 Lucent Technologies

If TRCUNUM and TRCCKT are entered, a second EQTMSLINK form entry for the same SIDE value must be made where its TMS LNK entry equals the original TMS LNK entry plus or minus 1 (plus 1 if the original TMS LNK entry is an even value; minus 1 if the original TMS LNK entry was an odd value); and, the second EQTMSLINK form must have SM, TRCUNUM, and TRCCKT values that match those from the original EQTMSLINK form.

2.13 TRCUNUM

Description: Enter the Transmission Rate Converter Unit number to interface NCT Links to an ORM or EXM-2000. For 5E12 and later, to support TRCU3, this field is now on the EQTRCUPATH form and is called HOST NUM.

Software Release: 5E11 and earlier
Valid Entries: Valid Entries: 1 - 96

Data Rules:

When either TRCCKT, TRCUNUM, or TRCCLI is entered, all must be entered.

The combination of TRCCKT and TRCUNUM must not be duplicated on any other EQTMSLINK form except when entering the second of a TMS LNK pair.

TRCCKT, TRCUNUM, and TRCCLI must be entered when SM USAGE on the EQIM form is "ORM".

For each matching EQTMSLINK form (using EVEN NLI TMs LINK 0 and ODD TMS LINK 0 from the EQNLI form), the TRCU NUMBERS on the EQTMSLINK form must be assigned on the EQCMTRCU form for the Local TRCU (SM equal to "0") and the EXM-2000 remote TRCU (SM equal to the value of the SM from the EQNLI form).

For the ORM that is an EXM-2000, the TRUC NUMBER entered on this form must exist as TRCU NUMBER on two separate EQCMTRCU forms. One EQCMTRCU form where SM is 0, the second EQCMTRCU form where SM equals SM from this EQTMSLINK form.

2.14 TRCCLI

Description: Enter the Transmission Rate Converter CLI value. For 5E12 and later, to support TRCU3, this field is now on the EQTRCUPATH form and is called HOST CLI.

Software Release: 5E11 and earlier
Valid Entries: Valid Entries: 0 - 7fffffff (hex)

Data Rules:

When either TRCCKT, TRCUNUM, or TRCCLI is entered, all must be entered.

See Division 8, Section 1 for CLI values.

2.15 FABRIC TYPE

Description: This is a Recent Change Only field.

FIXED ASSIGNMENTS TO THE TSI ON AN SM2000

TSI BOARD/SLICE	TSI SLOT/LINK	USE	INDEX	COMMENTS
0	0	MCP	0	Always required

Copyright © 2006 Lucent Technologies

0	1	DX	0	Always required
0	2	NLI	0	Always required in non VCDX (see NOTE)
0	2	LOOP	0	Always required in VCDX (see NOTE)
0	3	NLI	1	Always required in non VCDX

Note: The NLI and LOOP usage of SLOT 2 on BOARD 0 is mutually exclusive.

Figure 1 FIXED ASSIGNMENTS TO THE TSI ON AN SM2000

	QLI BOARD							
TMS SHELF	**0**	**1**	**2**	**3**	**4**	**5**	**6**	**7**
0	0-3*	4-7*	8-11	12-15	16-19	20-23	24-27	28-31
1	32-33*	34-37*	38-41	42-45	46-49	50-53	54-57	58-61
2	62-65	66-69	70-73	74-77	78-81	82-85	86-89	90-93
3	94-97	98-101	102-105	106-109	110-113	114-117	118-121	122-125
4	126-129	130-133	134-137	138-141	142-145	146-149	150-153	154-157
5	158-161	162-165	166-169	170-173	174-177	178-181	182-185	186-189

*These boards must be QLI1 boards, if assigned, due to FPC and PPC.
This table shows the relationship between TMS LINKS and TMS SHELF/QLI board numbers. The left hand column represents the TMS SHELF number. Each TMS SHELF consists of 8 QLI boards, numbers 0-7. The header across the top represents the QLI board numbers for the TMS SHELF. Example, TMS LINK number 40 resides on TMS SHELF 1, QLI board number 2.

Figure 2 RELATIONSHIP BETWEEN TMS LINKS AND TMS SHELF/QLI BOARDS

```
eqtmslink                          5ESS Switch            _
                            OFFICE DATA ADMINISTRATION
(5851)              Time Multiplexed Switch Link Equipage Form

*1. SIDE         _
*2. TMS LNK      ___
#3. QLICLI       _________
#4. SM           ___
 5. EQSTAT       O
    TRCU PATH    __
    FABRIC TYPE  _____
```

Figure 3 SAMPLE EQTMSLINK FORM 5E12 - 5E14 SOFTWARE RELEASES

```
eqtmslink                          5ESS Switch            _
                            OFFICE DATA ADMINISTRATION
(5851)                 Time Multiplexed Switch Link Equipage

*1. SIDE         _
*2. LINK         ___
#3. LINK TYPE    _____
#4. QLI CLI      _________
#5. SM           ___
 6. EQSTAT       O
```

Copyright © 2006 Lucent Technologies

```
    TRCU PATH   __
    FABRIC TYPE ____
```

Figure 4 SAMPLE EQTMSLINK FORM 5E15 SOFTWARE RELEASES

```
eqtmslink                          5ESS Switch            _
                           OFFICE DATA ADMINISTRATION
(5851)                 Time Multiplexed Switch Link Equipage

*1. SIDE        _
*2. TMSFP NUM   _
*3. LINK        ___
#4. LINK TYPE   ____
#5. QLI CLI     ________
#6. SM          ___
 7. EQSTAT      O
    TRCU PATH   __
    FABRIC TYPE ____
```

Figure 5 SAMPLE EQTMSLINK FORM 5E16(2) AND LATER SOFTWARE RELEASES

Copyright © 2006 Lucent Technologies

SEC. 54: 5852 RECORD
LOCAL DIGITAL SERVICE CIRCUIT 3 (SM-2000) - EQDSC3

1. GENERAL

The 5852 Record is available with the 5E9(2) and later Software Releases. It is used to define the DSC3 unit to provide the LDSUF (Local Digital Services Unit Function) to expand tone generators and decoders required for the expanded capacity of the SM-2000. Each DSC3 has four duplex PIDBs (Peripheral Interface Data Buses) for a total of 128 time slots of data and one duplex PICB (Peripheral Interface Control Buses) for control. This provides four times the number of time slots that the DSC2 supports. The DSC3 connects (via PIDBs/PICBs) to the TSI (Time Slot Interchanger) and the SMP (Switching Module Processor) via the DX (Data eXpander) and CI (Control Interface) links, respectively.

When this form is entered, UNIT TYPE on the EQIM form (5700 Record) must be set to an SM-2000 class processor. PACK NUMBER values for each combination of SM and DSU must be entered in sequential order. For example, PACK NUMBER 1 cannot be entered for an SM and DSU until PACK NUMBER 0 is entered for the same SM and DSU.

See Division 2, Section 9A for more detailed information on the DSC3.

1.1 Recent Change View

The Recent Change View for this form is 19.18.

2. FORM AND RECORD ENTRIES

2.1 BASE AND CONTROL, ESS UNIT

Enter the Base and Control Number and Office Name on each record.

2.2 *SM

Description: Enter the Switching Module number.

Required Field.
Valid Entries: 1 - 192

Data Rules:

For 5E10 and later, the combination of SM, BAY, VERTPOS and UNIT OFFSETmust be unique among the EQDSC3, EQGDSC3 (5860 Record), and EQRA (5821 Record) forms.

2.3 *DSU

Description: Enter the DS Unit 3 number. The only valid entry is 0.

Required Field.
Valid Entries: 0

Data Rules:

All DSUs for a given SM must have the same AISLE, BAY and VERTPOS values.

Copyright © 2006 Lucent Technologies

2.4 *PACK NUMBER

Description: Enter the DS Circuit 3 pack number.

Required Field.
Valid Entries: 0 - 5

Data Rules:

PACK NUMBER values for each combination of SM and DSU on this form must be entered in sequential order.

2.5 #UNIT OFFSET

Description: Enter the position of the DS Circuit 3 pack on the DSU3.

Required Field.
Valid Entries:
5E10 and earlier: 0 - 17
5E11 and later: 0 - 23

Data Rules:

UNIT OFFSET cannot be used on any other EQDSC3 form defined on the same DSU and SM.
For 5E18(1) and earlier, UNIT OFFSET must be 18 - 23 if UNIT TYPE is "SM2005".

For 5E19(1) and later, UNIT OFFSET must be 18 - 23 if UNIT TYPE is "SM2005" or "SMU6".

2.6 EQSTAT

Description: Enter the status of the unit.

Required Field.

Default Value. O

Valid EQUIPMENT STATUS Entries

Entry	Definition
G	Growth.
O	Operational.
U	Unequipped.

Data Rules:

When EQSTAT is not "O", DIGIT RCVRS, TONE OUTPLS, TONE XCVRS, CAMA and VOICE BAND DATA must be 0.

Low-Level Virtual Containers with trunks assigned to Autoplex facilities must have an EQSTAT of "O" for the associated Switching Module.

2.7 #CLI

Description: Enter the Change Level Indicator value.

Required Field.

Copyright © 2006 Lucent Technologies

Default: 0
Valid Entries: 0 - 7ffffffff (hex)

2.8 INTF UNIT

Description: Enter the Interface Unit number. This field was added to support the 5E15 Optically Extended Control and Data Unit feature. See Division 2, Section 9V.

Required Field.
Valid Entries: 0 - 8

Data Rules:

When INTF UNIT is greater than 0, it must be defined on the EQXCDU form for the same Switching Module. In addition, the EQSTAT value on the EQCI must not exceed the MOD CTL SG0/1 EQSTAT on the EQXCDU form (5853 Record). (EQSTAT of "O" is greater than EQSTAT of "G", and EQSTAT of "G" is greater than EQSTAT of "U".)

The SM/INTF UNIT/DATA GRP combinations entered on this form must be defined on a EQDI form or a EQXCDU form. Also, the EQSTAT on the matching EQDI or EQXCDU form must be greater than or equal to the equipment status value ("O", "G", or "U") on this form (e.g., "O" is greater than "G" which is greater than "U"). Note also that when INTF UNIT is greater than 0 and DATA GRP is 0, these Data Groups are defined on the EQXCDU form.

For 5E16(2) and later, when INTF UNIT is 0, EQUIPMENT BAY must be 000 - 014, 100 - 104, or 200 - 208.

2.9 #CI

Description: Enter the Control Interface group number.

Required Field.
Valid Entries: 0 - 3

Data Rules:

When this field is entered, the CI pair for CI 0 must be entered on the EQCI form (5848 Record).

CI (or CONTROL GROUP) numbers assigned on the following forms must be defined as CI on an EQCI form: EQDCTU (5751 Record), EQDCLU (5810 Record), EQDS (5740 Record), EQDSC3 (5852 Record), EQDUP (5730-2), EQGDSC3 (5860 Record), EQIDCU (5846 Record), EQISLU (5731 Record), EQISTF (5823 Record), EQLU (5710 Record), EQPSU (5741 Record), EQRA (5821 Record), EQTU (5720 Record), EQFIU (5753 Record), EQMSU (5750 Record), EQRCLK (5723 Record). Furthermore, the EQSTAT on the matching EQCI form must be greater than or equal to the equipment status value on the equipment form (i.e., "O" is greater than "G" which is greater than "U").

2.10 #PICB

Description: Enter the Peripheral Interface Control Bus number.

Required Field.
Valid Entries: 0 - 22

2.11 #AISLE

Copyright © 2006 Lucent Technologies

Description: Enter the aisle (and floor) where the DSU3 is located. The floor is designated 00 - 99 and the aisle is designated 00 - 99.

Required Field.
Valid Entries: 0000 - 9999

2.12 #BAY

Description: Enter the Bay number where the DSU3 is located.

Required Field.
Valid Entries: 0 - 208

Valid BAY Entries 5E9(2) - 5E16(1)

Entry	Definition
0 - 4	Switching Module (non-SM-2000).
0 - 14	SM-2000 class processor; SM Cabinent aisle.
100 - 104	SM-2000 class processor; Back panel; wiring position.
200 - 208	SM-2000 class processor; Front panel; door position.

Valid BAY Entries for 5E16(2) and later

Entry			Type
000 - 004			SM
000 - 014,	100 - 104,	200 - 208,	SM-2000
A00 - A14,	B00 - B04,	C00 - C08,	
D00 - D14,	E00 - E04,	F00 - F08,	
G00 - G14,	H00 - H04,	J00 - J08,	
K00 - K14,	L00 - L04,	M00 - M08,	
N00 - N14,	P00 - P04,	Q00 - Q08,	
R00 - R14,	S00 - S04,	T00 - T08,	
U00 - U14,	V00 - V04,	W00 - W08,	
X00 - X14,	Y00 - Y04,	Z00 - Z08	

2.13 # VERTPOS

Description: Enter the Vertical Position where the DSU3 is located. Recommended positions are as follows:

For 7-foot cabinets: 22,30, 39, 48, 56, 65, 74

- For 6-foot cabinets: 7, 15, 24, 32, 41, 49, 58

NOTE: Growth forms must have a Vertical Position of 15.

Required Field.
Valid Entries: 00 - 84

2.14 #DI

Description: Enter the Data Interface number.

Required Field.
Valid Entries: 0 - 5

Data Rules:

Copyright © 2006 Lucent Technologies

The following forms cannot have a duplicate Data Port assignment on the same Switching Module: EQDCLU (5810 Record), EQDS (5740 Record), EQDSC3 (5852 Record), EQDUP (5730-2), EQGDSC3 (5860 Record), EQIDCU (5846 Record), EQISLU (5731 Record), EQISTF (5823 Record), EQLU (5710 Record), EQPSU (5741 Record), EQRA (5821 Record), EQTU (5720 Record).

PIDB LIST/ROW PIDB

This field group defines the PIDB numbers for rows 1 - 4. Each PIDB row must be unique.

2.15 #PIDB

Description: Enter the PIDB for rows 1 - 4.

Required Field.
Valid Entries: 0 - 23

FEATURE GRP SVC CNT

The following fields (Section 2.16 - Section 2.20) define the number (count) of feature group services assigned. Note that the values entered for service counts cannot exceed the 10 DSP (Digital Service Pack) limit. The following restrictions establish pack limitations:

- 1 DSP provides a maximum of 64 Tone Generators.
- 1 DSP provides a maximum of 16 Tone Decoders and/or CAMA tone generator.
- 1 DSP provides a maximum of 16 Tone Transceivers.
- 1 DSP provides a maximum of 8 VBS generators.

2.16 #DIGIT RCVRS

Description: Enter the number of Digit Receivers assigned to the DSC3. This service count defines the number of incoming circuits and uses incoming time slots.

Required Field.
Valid Entries: 0 - 127

Data Rules:

DIGIT RCVRS plus TONE XCVRS plus CAMA must not be greater than 127.

2.17 #TONE OUTPLS

Description: Enter the number of Tone Outplusers assigned to the DSC3. This service count defines the number of outpulsing circuits and uses outgoing time slots.

Required Field.
Valid Entries: 0 - 127

Data Rules:

TONE OUTPLS plus TONE XCVRS plus VOICE BAND DATA cannot be greater than 127.

Copyright © 2006 Lucent Technologies

2.18 #TONE XCVRS

Description: Enter the number of Tone Transceivers assigned to the DSC3. This service count defines the number of transceiver circuits and uses both incoming and outgoing time slots.

Required Field.
Valid Entries: 0 - 127

Data Rules:

TONE OUTPLS plus TONE XCVRS plus VOICE BAND DATA cannot be greater than 127.

DIGIT RCVRS plus TONE XCVRS plus CAMA must not be greater than 127.

2.19 #CAMA

Description: Enter the number of Centralized Automatic Message Accounting services assigned to the DSC3. This service count defines the number of CAMA tone generator circuits and uses incoming time slots.

Required Field.
Valid Entries: 0 - 127

DIGIT RCVRS plus TONE XCVRS plus CAMA must not be greater than 127.

2.20 #VOICE BAND DATA

Description: Enter the number of Voice Band Data services assigned to the DSC3. This service count defines the number of VBD assurance circuits and uses outgoing time slots.

Required Field.
Valid Entries: 0 - 127

Data Rules:

TONE OUTPLS plus TONE XCVRS plus VOICE BAND DATA cannot be greater than 127.

```
eqdsc3                          5ESS Switch
                         OFFICE DATA ADMINISTRATION
(5852)             LOCAL DIGITAL SERVICE CIRCUIT 3 (SM2000)

 *1. SM          ___       #13. PIDB LIST          FEATURE GRP      SVC CNT
 *2. DSU         _           ROW   PIDB          #18. DIGIT RCVRS     ___
 *3. PACK NUMBER _            1     __           #19. TONE OUTPLS     ___
 #4. UNIT OFFSET __           2     __           #20. TONE XCVRS      ___
  5. EQSTAT      O            3     __           #21. CAMA            ___
 #6. CLI         00000000     4     __           #22. VOICE BAND DATA ___
 #7. CI          _
 #8. PICB        __
 #9. AISLE       ____
#10. BAY         ___
#11. VERTPOS     __
```

Copyright © 2006 Lucent Technologies

```
#12. DI          _
```

Figure 1 SAMPLE EQDSC3 FORM 5E14 AND EARLIER SOFTWARE RELEASES

```
eqdsc3                          5ESS Switch           _
                         OFFICE DATA ADMINISTRATION
(5852)             LOCAL DIGITAL SERVICE CIRCUIT 3 (SM2000)

 *1. SM          ___       #13. DI  _              FEATURE GRP      SVC CNT
 *2. DSU         _         #14. PIDB LIST        #16. DIGIT RCVRS     ___
 *3. PACK NUMBER _           ROW   PIDB          #17. TONE OUTPLS     ___
 #4. UNIT OFFSET __           1     __           #18. TONE XCVRS      ___
  5. EQSTAT      O            2     __           #19. CAMA            ___
 #6. CLI         00000000     3     __           #20. VOICE BAND DATA ___
  7. INTF UNIT   _            4     __
 #8. CI          _
 #9. PICB        __
#10. AISLE       ____
#11. BAY         ___
#12. VERTPOS     __
```

Figure 2 SAMPLE EQDSC3 FORM 5E15 AND LATER SOFTWARE RELEASES

Copyright © 2006 Lucent Technologies

SEC. 55: 5853 RECORD
NETWORK LINK INTERFACE GROWTH (SM-2000) - EQNLI

1. GENERAL

The 5853 Record is available with 5E9(2) and later Software Releases. It is used to define the NLI (Network Link Interface) which terminates the NCT2 (Network Control and Timing Links 2) from the SM-2000 (Switching Module-2000) TSI (Time Slot Interchanger) to the TMSU (Time Multiplexedn Switch Unit) of the CM2. For the SM-2000, the NLI is an optical interface; for the EXM-2000, the NLI is an electrical interface. One EQNLI form is required for each duplicated pair of NCT2 links for the SM-2000.

NOTE: Each EQNLI form that is associated with an optically remoted SM equipped with an SM-200 class processor must have EQCMTRCU assignments as follows: For each matching EQTMSLINK form (using EVEN NLI TMS LINK0 and ODD NLI TMS LINK0 from EQNLI), the TRCU NUMBERs on the EQTMSLINK form must be assigned on the EQCMTRCU form for the Local TRCU (key SM - 0) and the remote TRCU (key SM = SM from EQNLI).

1.1 Recent Change View

The Recent Change View for this form is 18.16.

2. FORM AND RECORD ENTRIES

2.1 BASE AND CONTROL, ESS UNIT

Enter the Base and Control Number and Office Name on each record.

2.2 *SM

Description: Enter the Switching Module.

Required Field.
Valid Entries: 1 - 192

Data Rules:

The SM entered must have a corresponding EQIM form (5700) with UNIT TYPE set to an SM-2000 class processor.

The EQCORE form (5701 Record) must be inserted before this form can be inserted/updated.

2.3 *EVEN NLI

Description: Enter the even NLI. This field identifies the even network link interface number of the NCT2 links. An EVEN NLI of 0 represents the even NLI associated with the primary NCT2 links. The primary NCT2 links are always required. EVEN NLI 0 and ODD NLI 1 are referred to as "primary" NCT2 links. An EVEN NLI of 2 through 22 (even values only) represents an even NLI associated with a secondary NCT2 link. The secondary NCT2 links are optional.

Required Field.
Valid Entries: 0 - 22 (even values)

Data Rules:

Copyright © 2006 Lucent Technologies

All TMS LINK values entered and/or derived from these forms must be unique.

TMS LINKs are assigned on three forms: the EQIM form (5700-1/2 Record) as NCT EVEN LINK, on the EQNLI form (for SM-2000 only) as EVEN/ODD NLI TMS LINK 0, and on the EQQLPS form (per QLPS NETWORK) as STARTING QTMSLINK. Additional TMS LINKs are derived from these same form entries. An NCT EVEN LINK entry also derives a TMS LINK entry of NCT EVEN LINK +1 (known as the NCT ODD LINK). An EVEN or ODD NLI TMS LINK 0 entry on the EQNLI form derives another TMS LINK entry of either EVEN/ODD TMS LINK 0 +2 or EVEN/ODD TMS LINK 0 +4 (when the SM-2000 is not optically remoted, or is not CDX). This is dependent upon the value of the TMS TYPE on the EQCORE form. If TMS TYPE is "SNGL", 2 is added; if "DUAL", 4 is added.

QTMSLINK 2, QTMSLINK 3 and QTMSLINK 4 are derived from STARTING QTMSLINK (per QLPS NETWORK) on the EQQLPS form. The value of each of these derived QGMSLINKs is also dependent on TMS TYPE from the EQCORE form. If TMS TYPE is "SNGL", 1, 2 and 3, respectively, are added to the STARTING QTMSLINK value; if TMS TYPE is "DUAL", 2, 4 and 6, respectively, are added.

For 5e16(2) and later, the TMSFP NUM and TMS LINK combination entered and/or derived from the forms mentioned above must be unique.

When EVEN NLI is 0, the EVEN NLI TMS LINK 0 entry must match the NCT EVEN LINK value on the corresponding EQIM form and the ODD NLI TMS LINK 0 entry must match the NCT EVEN LINK value on the EQIM form plus 1.

For a single SM-2000 class processor, even NLIs must be equipped in sequential order (NLI 4 cannot be equipped before NLI 2.)

If EVEN NLI is 0, EQSTAT must be "O".

For 5e16(2) and later, when office is a CM2, EVEN NLI entries made on the EQNLI form must be made in sequential, even valued, order for an SM. For example, an EVEN NLI of 4 cannot be entered until an EVEN NLI of 2 is entered.

2.4 ODD NLI

Description: The ODD NLI is automatically populated with the next highest odd integer above the EVEN NLI value entered. The ODD NLI of 1 represents the odd NLI associated with the primary NCT/NCT2 links which are always required.

2.5 EQSTAT

Description: Enter the status of the equipment.
Default: O
Valid Entries:

Valid EQSTAT Entries

Entry	Definition
G	Growth.
O	Operational.
U	Unequipped.

2.6 * TMSFP NUM

Description: This field indicates the Time Multiplex Switch Fabric Pair number.

Copyright © 2006 Lucent Technologies

Required Field.

Software Release: 5E16(2) and later
Valid Entries:

0 for CM2
0 - 3 for CM3

Data Rules:

When EVEN NLI is 0, TMSFP NUM must be 0.

When office has a CM2, TMSFP NUM must be 0.

EVEN NLI (E)

The following fields (Section 2.7 - Section 2.12) define the even NLI. Each NLI (even and odd) is assigned to a port on a TSI slice. A TSI link connects each NLI to a TSI slice. The TSI BOARD field identifies the TSI slice to which this NLI is assigned. The TSI BOARD field for the ODD NLI is automatically populated with the value equal to the TSI BOARD field for the EVEN NLI. The even and odd NCT2 links of the same NCT2 link pair must terminate to the same TSI slice.

2.7 #TSI BOARD

Description: Enter the TSI Board for the even NLI.

Required Field.
Valid Entries: 0 - 9

Data Rules:

When the EVEN NLI is 0, indicating the primary NCT2 links, the TSI Board must be 0.

When the EVEN NLI is 2 - 22 (even values only), indicating secondary NCT2 links, the TSI BOARD may be 1 - 19.

For a given SM, the combination of TSI BOARD and TSI SLOT entries on the EQDI form, the EQPDXU form, the EQDNUS form, and for the EQNLI form must not be duplicated on any other EQDI form (except if entered as the second of a DI pair), on the same or any other EQNLI form, on the same or any other EQPDXU form (except when entering a PCTDX1 where the XAIU CONFIG is equal to "LOW"), or on any EQDNUS form.

2.8 #TSI SLOT

Description: Enter the TSI Slot for the even NLI. Each NLI (even and odd) is assigned to a port on a TSI slice. The TSI SLOT field identifies the port on the TSI slice to which this NLI is assigned (i.e., slot equals port). The even and odd NCT2 links of the same NCT2 link pair must terminate to coupler port positions (e.g., ports 0,1 and/or 2,3) on the same TSI slice.

Required Field.
Valid Entries: 0 or 2

Data Rules:

Copyright © 2006 Lucent Technologies

When the EVEN NLI is 0, indicating the primary NCT2 links, the TSI SLOT must be 2.

When the EVEN NLI is 2 - 22 (even values only), indicating secondary NCT2 links, the TSI SLOT may be 0 or 2.

2.9 #TMS LINK 0

Description: Enter the Time Multiplex Switch Link 0 for the EVEN NLI. This field identifies the TMS link 0 number (first even TMS link or lowest even TMS link) associated with the even NLI. Even NLI TMS LINK 0 entries on this form are entered, and even NLI TMS LINK 1 entries are derived from them by adding either 2 or 4 to the TMS LINK 0 value based upon the value of the TMS CONFIGURATION on the EQCORE form (5701 Record). If TMS CONFIGURATION is "SNGL", 2 is added to the even NLI TMS LINK 0 entry; if TMS CONFIGURATION is "DUAL", 4 is added.

For example,

- for "SNGL" fabric, the valid entries range from 8 - 28 and 38 - 186 in increments of 4 (e.g., 8, 12, 16 or 38, 42, 46, etc.).
- for "DUAL" fabric, the valid enries range from 6 or 8 to 374 or 376 in increments of 8 (e.g., 6, 8, 14, 16, 22, 24, 30, 32, etc.).

Required Field.
Valid Entries:
5E9(2): 6 - 380 (even values)
5E10 and later: 2 - 380 (even values)

Data Rules:

Each combination of TMSFP NUM and EVEN/ODD NLI TMS LINK 0 value entered (and each combination of TMSFP NUM and EVEN/ODD NLI TMS LINK 1 value derived) on this EQNLI form must be entered as TMS LNK on a matching EQTMSLINK form for the appropriate SM. The matching EQTMSLINK forms must have an SM entry equal to the SM entry on the this EQNLI form.

For 5E15 and later:

When an office is equipped with a CM3 (Communication Module 3), the EQTMS form's (5866 Record) SHELF EQUIPAGE - CM3 SHELF defines the valid range of the TMS LINK O EVEN/ODD NLI assigned on the EQNLI form (5853 Record). The EQTMS form is found using the TMSFP NUM value on the EQNLI form. In addition, if the EQSTAT for this shelf is "G", then the EQSTAT on the EQNLI form must also be "G". The link to shelf relationship is as follows:

If TMS LINK 0 EVEN NLI is an even number from 84-176, SHELF = 1

If TMS LINK 0 EVEN NLI is an even number from 180-272, SHELF = 2

If TMS LINK 0 EVEN NLI is an even number from 276-368, SHELF = 3

NOTE: The link range for SHELF 0 is not checked since EQSTAT for SHELF 0 must always be "O" in a CM3 office.

Copyright © 2006 Lucent Technologies

When an office is equipped with CM2, EVEN NLI TMS LINK 0 must be an even number between 4 and 376, and have FABRIC TYPE exceptions of 4 for "DUAL", and 32 for "SNGL".

When an office is equipped with CM3, EVEN NLI TMS LINK 0 must be an even number between 4 and 370.

2.10 TMS LINK 1

Description: The value displayed in this field is automatically populated and is derived from the EVEN NLI TMS 0 entry. It identifies the TMS link 1 number (second even TMS link or highest even TMS link) associated with the even NLI. For example:

- For "SNGL" fabric, the EVEN NLI - TMS 1 value will equal the EVEN NLI TMS LINK 0 value plus 2 (TMS LINK 0 + 2 = TMS LINK 1).
- For "DUAL" fabric, the EVEN NLI - TMS LINK 1 value will equal the EVEN NLI TMS LINK 0 value plus 4 (TMS LINK 0 + 4 = TMS LINK 1).

TMS LINK 1 values only apply to local SM-2000s; they are not derived for optically remote SM-2000s (EXM-2000s).

NOTE: For CM3, the TMSLINK 1 value will equal the LINK 0 value plus 2.

Data Rules:

If TMS CONFIGURATION on the EQCORE form (5701) is "SNGL", 2 is added to the EVEN NLI TMS 0 value entered. If TMS CONFIGURATION is "DUAL", 4 is added to the EVEN NLI TMS 0 value entered.

2.11 #NLI 0 CLI

Description: Enter the Change Level Indicator for the NLI 0 board. The BKD1 paddle board (NLI) is used to terminate NCT2 links on an SM-2000 in a host 5ESS-2000 Switch.

Required Field.
Valid Entries: 0 - 7fffffff (hex)

Refer to Division 8, Section 1 for a complete listing of CLI values and associated J-drawings.

2.12 #NLI 1 CLI

Description: Enter the Change Level Indicator for the NLI 1 CLI.

Required Field.
Valid Entries: 0 - 7fffffff (hex)

Refer to Division 8, Section 1 for a complete listing of CLI values and associated J-drawings.

ODD NLI (O)

The following fields (Section 2.13 - Section 2.18) define the odd NLI.

2.13 TSI BOARD

Description: The TSI Board for the odd NLI is automatically populated with the same value entered for the

Copyright © 2006 Lucent Technologies

Even NLI TSI Board.

Required Field.
Valid Entries: 0 - 9

2.14 TSI SLOT

Description: The TSI Slot for the odd NLI is automatically populated with the next highest integer above the even TSI SLOT value entered. The values displayed will be either 1 or 3.

Required Field.

2.15 TMS LINK 0

Description: The Time Multiplex Switch Link 0 for the odd NLI 0 is automatically populated with the next highest integer above the odd TMS Link 0 value entered. The value displayed will be odd numbers in the range 7 - 381.

NOTE: This value can be changed; however, it is not recommended.

Odd NLI TMS LINK 0 entries on this form are entered, and odd NLI TMS LINK 1 entries are derived from them by adding either 2 or 4 to them based on the value of the TMS CONFIGURATION on the EQCORE form (5701 Record). If TMS CONFIGURATION is "SNGL", 2 is added to the odd NLI TMS LINK 0 entry; if TMS CONFIGURATION is "DUAL", 4 is added.

Data Rules:

Each EVEN/ODD NLI TMS LINK 0 value entered (and each EVEN/ODD NLI TMS LINK 1 value derived) on this EQNLI form must be entered as TMS LNK on a matching EQTMSLINK form (5851 Record) for the appropriate SM. The matching EQTMSLINK forms must have an SM entry equal to the SM entry on this EQNLI form.

2.16 TMS LINK 1

Description: This is a display only field. The value displayed in this field is automatically populated and is derived from the EVEN NLI TMS LINK 0 entry. TMS LINK 1 values only apply to local SM-2000s; they are not derived for optically remote EXM-2000s.

NOTE: If TMS CONFIGURATION on the EQCORE form (5701) is "SNGL", 2 is added to the EVEN NLI TMS 0 value entered. For example:

- For "SNGL" fabric, the ODD NLI - TMS 1 value will equal the ODD NLI - TMS LINK 0 value plus 2 (TMS LINK 0 + 2 = TMS LINK 1).
- For "DUAL" fabric, the ODD NLI - TMS LINK 1 value will equal the ODD NLI - TMS LINK 0 value plus 4 (TMS LINK 0 + 4 = TMS LINK 1).

NOTE: For CM3, the TMSLINK 1 value will equal the LINK 0 value plus 2.

2.17 #NLI 0 CLI

Description: Enter the Change Level Indicator for the NLI 0.

Copyright © 2006 Lucent Technologies

Required Field.
Valid Entries: 0 - 7ffffff (hex)

Refer to Division 8, Section 1 for a complete listing of CLI values and associated J-drawings.

2.18 #NLI 1 CLI

Description: Enter the Change Level Indicator for the NLI 1 CLI.

Required Field.
Valid Entries: 0 - 7ffffff (hex)

Refer to Division 8, Section 1 for a complete listing of CLI values and associated J-drawings.

```
eqnli                           5ESS Switch          _
                          OFFICE DATA ADMINISTRATION
(5853)                       NLI GROWTH (SM2000)

*1. SM        ___            EVEN NLI (E)              ODD NLI (O)
*2. EVEN NLI __              __________                  _________
    ODD NLI  __     #5. TSI BOARD  _              TSI BOARD  _
 4. EQSTAT   O      #6. TSI SLOT   _              TSI SLOT   _
                    #7. TMS LINK 0 ___         13. TMS LINK 0 ___
                        TMS LINK 1                TMS LINK 1
                    #9. NLI 0 CLI  ________   #15. NLI 0 CLI  ________
                   #10. NLI 1 CLI  ________   #16. NLI 1 CLI  ________
```

Figure 1 SAMPLE EQNLI FORM 5E9(2) THROUGH 5E15 SOFTWARE RELEASES

```
eqnli                           5ESS Switch          _
                          OFFICE DATA ADMINISTRATION
(5853)                       NLI GROWTH (SM2000)

*1. SM        ___            EVEN NLI (E)              ODD NLI (O)
*2. EVEN NLI  __      #6. TSI BOARD  _              TSI BOARD  _
    ODD NLI   __      #7. TSI SLOT   _              TSI SLOT   _
 4. EQSTAT    O       #8. TMS LINK 0 ___            TMS LINK 0 ___
#5. TMSFP NUM _           TMS LINK 1 ___            TMS LINK 1 ___
                     #10. NLI 0 CLI  ________   #16. NLI 0 CLI  ________
                     #11. NLI 1 CLI  ________   #17. NLI 1 CLI  ________
```

Copyright © 2006 Lucent Technologies

Figure 2 SAMPLE EQNLI FORM 5E16(2) AND LATER SOFTWARE RELEASES

SEC. 56: 5854 RECORD
QLPS BOARD FORM - EQQLPS

1. GENERAL

The 5854 Record is available with the 5E9(2) and later Software Releases. It is used to define a QLPS (Quad-Link Packet Switch) board.

QLPS is an overlay network that provides high bandwidth message transport between SM-2000s and between SM-2000s and existing processors. A QLPS network consists of two QLPS boards, one installed on each side of the ONTC (Office Network and Timing Complex). One side is always the active QLPS and the other is the standby QLPS for the network during normal operation.

An EQQLPS form can be entered only if CM VINTAGE is 2 or 3, and TIME MULTIPLEXED SWITCH CLI is 00000100 on the EQCORE form (5701 Record) (for 5E14 and earlier), or the CLI on the EQTMS form (5866 Record) (for 5E15 and later) is 0000100. In addition, the QGWP (Quad-Link Gateway Processor) field on the ECDOPT form (5706 Record) must be "Y".

An appropriate EQPIPE form (5544 Record) must be entered to complete the definition of the QLPS network for a CM2 (Communication Module Model 2) office only. For CM3 offices, the population of the data is handled in forward mapping. For more information, see Division 2, Section 9D, Quad-Link Packet Switch Network.

1.1 Recent Change View

The corresponding Recent Change View for this form is 17.19.

2. FORM AND RECORD ENTRIES

2.1 BASE AND CONTROL, ESS UNIT

Enter the Base and Control Number and the Office Name on each record.

2.2 * ONTC SIDE

Description: Enter the ONTC (Office Network and Timing Complex) Side on which the QLPS hardware is being installed.

NOTE: Four of these forms should exist for CM3.

Required Field.
Valid Entries: 0, 1

Data Rules:

The EQCORE form (5701 Record) must be inserted before this form can be inserted/updated.

2.3 * QLPS NETWORK

Description: Enter the QLPS Board, identified by the number of its QLPS Network.

Required Field.
Valid Entries: 0, 1

Copyright © 2006 Lucent Technologies

Data Rules:

EQQLPS forms for the same QLPS NETWORK must have the same STARTING QTMSLINK.

2.4 # TMS CONFIGURATION

Description: Enter the TMS (Time Multiplexed Switch) configuration.

Required Field.

Valid TMS CONFIGURATION Entries

Entry	Description
SNGL	Single fabric.
DUAL	Dual fabric.

Data Rules:

TMS CONFIGURATION must be same as the TMS CONFIGURATION on the EQCORE form.

When an office is equipped with CM3, TMS CONFIGURATION must be "DUAL".

2.5 # STARTING QTMSLINK

Description: Enter the number of the first TMS Link to the QLPS board. Each QLPS board on an ONTC side occupies four TMS links. The first must be entered here; the remaining three are automatically assigned by the system in the QTMSLINK 2, QTMSLINK 3, and QTMSLINK 4 fields.

For single fabric, enter 4 - 28 or 34 - 186 in increments of 4. For dual fabric, network 0, enter 6 - 374 in increments of 8; for dual fabric, network 1, enter 7 - 375 in increments of 8.

Required Field.
Valid Entries: 4 - 375

Data Rules:

TMS LINKS can be assigned on three forms: on the EQIM form (5700-1/2 Record) as NCT EVEN LINK, on the EQNLI form (5853 Record) as EVEN (or ODD) TMS LINK 0, and on the EQQLPS form as STARTING QTMSLINK. On each form additional TMS LINKS are derived from the specified link and the TMS configuration. All TMS LINKs entered or derived on these forms must be unique in the switch.

2.6 QTMSLINK 2

Description: This field is the second QTMSLINK to the QLPS board and cannot be entered by the switch owner. For single fabric, this field is automatically set to STARTING QTMSLINK + 1; for dual fabric, it is set to STARTING QTMSLINK + 2.

2.7 QTMSLINK 3

Description: This field is the third QTMSLINK to the QLPS board and cannot be entered by the switch owner. For single fabric, this field is automatically set to STARTING QTMSLINK + 2; for dual fabric, it is set to STARTING QTMSLINK + 4.

2.8 QTMSLINK 4

Description: This field is the fourth QTMSLINK to the QLPS board and cannot be entered by the switch owner.

Copyright © 2006 Lucent Technologies

For single fabric, this field is automatically set to STARTING QTMSLINK + 3; for dual fabric, it is set to STARTING QTMSLINK + 6.

2.9 EQSTAT

Description: Enter the equipment status of the QLPS board.

Required Field.
Default: G
Valid Entries:

Valid EQSTAT Entries	
Entry	**Description**
G	Growth.
O	Operational.

Data Rules:

EQSTAT must be "O" for new offices and for offices with equipment additions.

EQSTAT cannot be "G" for offices during a retrofit.

For 5E14 and later, when this form exists, the EQSTAT must be "O" before any QPH (QLPS Protocol Handler) pipes can be defined on the QPHPIPE form.

2.10 CLI

Description: Enter the Change Level Indicator, which identifies the version of the QLPS hardware.

For a complete listing of valid CLI values, J-Drawing and list combinations, see Division 8, Section 1.

Required Field.
Default: 0
Valid Entries: 0 - 7FFFFFFF

```
eqqlps                          5ESS Switch          _
                        OFFICE DATA ADMINISTRATION
(5854)                          QLPS BOARD

*1. ONTC SIDE         _
*2. QLPS NETWORK      _
#3. TMS CONFIGURATION ____
#4. STARTING QTMSLINK ___
    QTMSLINK 2        ___
    QTMSLINK 3        ___
    QTMSLINK 4        ___
 8. EQSTAT            G
 9. CLI               00000000
```

Figure 1 SAMPLE EQQLPS FORM 5E9(2) AND LATER SOFTWARE RELEASES

Copyright © 2006 Lucent Technologies

SEC. 57: 5855 RECORD
DIGITAL NETWORKING UNIT SONET (SM-2000) - EQDNUS

1. GENERAL

The 5855 Record is available with 5E9(2) and later Software Releases. This form is used to define the equipage information for the DNU-S (Digital Networking Unit-SONET) in an SM-2000. The DNU-S provides SONET (Synchronous Optical Network) capabilities by allowing a maximum of 12 STS (Synchronous Transport Signal) links to terminate to the switch. Each STS link carries 28 DS1S (Digital Signal level 1 SONET) facilities.

This form supports the DNU-S feature. For more information on DNU-S, see Division 2, Section 9C.

1.1 Data Groups

DNU-S has two data groups. DG0 (the first data group) is equipped and operational first. Then, as more capacity is needed DG1 (the second data group) is grown.

1.2 Equipment Status

The EQSTAT fields on this form can either be in the Growth state, "G", the Operational state, "O", or the Unequipped state "U". "O" is considered the highest state, "G" the middle state, and "U" the lowest state. Form checks (level 2 checks) for equipment states reference this hierarchy. For example: "CC0 EQSTAT and CC1 EQSTAT must be greater than or equal to DG0 CD 0 EQSTAT and DG0 CD 1 EQSTAT" would equate to the following:

if DG0 CD 0 EQSTAT is "O"
or DG0 CD 1 EQSTAT is "O",
then CC0 EQSTAT must be "O"
and CC1EQSTAT must be "O".

and:
if DG0 CD 0 EQSTAT is "G"
or DG0 CD1 EQSTAT is "G",
then CC0 EQSTAT must be "O" or "G",
and CC1 EQSTAT must be "O" or "G".

The 5855-1 and 5855-2 Records show the relationship of the equipment states for EQDNUS EQSTAT fields.

1.3 Recent Change View

The corresponding Recent Change View for this form is 19.14.

2. FORM ENTRIES 5855-1/2 RECORDS

2.1 BASE AND CONTROL, ESS UNIT

Enter the Base and Control Number and the Office Name on each record.

2.2 *SM

Copyright © 2006 Lucent Technologies

Description: The SM field is used to specify the switching module number for an SM-2000.

Required Field.
Valid Entries: 1 - 192

Data Rules:

The total number of EQDNUS forms with the same SM number must not be greater than four.

Each SM entered on this form must be assigned on an EQIM form with the same SM number.

Each value of SM entered on the EQDNUS, EQSTE, and EQVT forms must have a corresponding EQIM form with the same SM value where the value entered for CONFIGURATION supports Digital Networking Unit-SONET. The only value for CONFIGURATION which supports DNU-S is "SM2000".

EQDNUS forms are associated with EQIM forms (5700 Record) when UNIT TYPE on the EQIM form is "SM2000", "SM2005", or "SMU6".

2.3 * DNUS

Description: Enter the DNU-S (Digital Networking Unit SONET) unit number, which indicates the circuit location for DNU-S in the SM-2000.

Required Field.
Valid Entries: 0 - 7

2.4 # EQL BAY

Description: Enter the Equipment Location Bay number of the frame on which the DNU-S resides.

Required Field.
Valid Entries: 1 - 14, 90 - 104, 200 - 208

2.5 # EQL UNVER

Description: Enter the Equipment Location Unit Vertical Position of the frame on which the DNU-S resides. Only 7, 15, 24, 32, 41, 49, or 58 are expected in a 6 foot cabinet.

Required Field.
Valid Entries: 0 - 84

2.6 # EQL AISLE

Description: Enter the Equipment Location Aisle Number which is used to specify the aisle position of the frame on which the DNU-S resides. The first 2 digits are the floor location and the last 2 digits are the aisle location; i.e., enter 00 - 99 for floor and 00 - 99 for aisle.

Required Field.
Valid Entries: 0000 - 9999

2.7 CC0 EQSTAT

Description: Enter the Common Controller 0 Equipage State on the DNU-S.

Copyright © 2006 Lucent Technologies

Required Field.
Default: O
Valid Entries:

Valid CC0 EQSTAT Entries	
Entry	**Definition**
G	Growth
O	Operational
U	Unequipped

Data Rules:

Initial and growth offices must have CC0 EQSTAT and CC1 EQSTAT set to "O".

If CC0 EQSTAT is "U" or CC1 EQSTAT is "U", then both must be "U". CC0 EQSTAT and CC1 EQSTAT must be greater than or equal to DG0 CD 0 EQSTAT and DG0 CD 1 EQSTAT, therefore:

- If DG0 CD 0 EQSTAT or DG0 CD 1 EQSTAT is "O" , then, CC0 EQSTAT and CC1 EQSTAT must be "O".
- If DG0 CD 0 EQSTAT or DG0 CD 1 EQSTAT is "G", then CC0 EQSTAT and CC1 EQSTAT must be "O" or "G".

If "G" or "O" is entered, then the required EQMH form must have a matching SM number, and both MH SIDE 0 EQSTAT and MH SIDE 1 EQSTAT must be "O".

The EQDNUS forms with CC0 EQSTAT of "G" or "O" and/or the EQAIU forms with AIU TYPE of "EAIU", and TSPFAC0/TSPFAC1 row 1 EQSTAT of "G" or "O", and/or the EQAIU forms with AIU TYPE of "XAIU" and XAIUTSGRP row 1 EQSTAT of "G" or "O" exceed the channel capacity of EQMH form(s) with a matching SM number. Each MH provides up to 31 channels."

2.8 CC1 EQSTAT

Description: Enter the Common Controller 1 equipage state on the DNU-S.

Required Field.
Default: O
Valid Entries:

Valid CC1 EQSTAT Entries	
Entry	**Definition**
G	Growth
O	Operational
U	Unequipped

Data Rules:

Initial and growth offices must have CC0 EQSTAT and CC1 EQSTAT set to "O".

If CC0 EQSTAT is "U" or CC1 EQSTAT is "U", then both must be "U".

CC0 EQSTAT and CC1 EQSTAT must be greater than or equal to DG0 CD 0 EQSTAT and DG0 CD 1 EQSTAT, therefore:

- If DG0 CD 0 EQSTAT or DG0 CD 1 EQSTAT is "O", then CC0 EQSTAT and CC1 EQSTAT must be "O".

Copyright © 2006 Lucent Technologies

- If DG0 CD 0 EQSTAT or DG0 CD 1 EQSTAT is "G", then CC0 EQSTAT and CC1 EQSTAT must be "O" or "G".

2.9 CC0 CLI

Description: Enter a hexadecimal number for the Common Control 0 Change Level Indicator for the DNU-S.

Required Field.
Default: 0
Valid Entries: 0 - 7FFFFFFF (hexadecimal)

Data Rules:

For the first hardware version the only valid value is 0. Later hardware versions will require other CLI values.

2.10 CC1 CLI

Description: Enter the hexadecimal Common Control 1 Change Level Indicator for DNU-S.

Required Field.
Default: 0
Valid Entries: 0 - 7FFFFFFF (hexadecimal)

Data Rules:

For the first hardware version the only valid value is 0. Later hardware versions will require other CLI values.

DATA GROUP 0 (DG0) and DATA GROUP 1 (DG1)

The following fields (Section 2.11 - Section 2.21) define the equipage information for the Data Group 0 (5855-1 Record) and Data Group 1 (5855-2 Record). The Data Groups consist of CD (Common Data), the Spare and Service TMUXs (Transmission Multiplexers), the PCT LINKS and SFI (STSX-1 Facility Interface) components.

DG0 must be grown in DNU-S first. As more capacity is needed, DNU-S can then grow in DG1.

For DG0:
Initial and growth offices must have DG0 CD 0 EQSTAT, DG0 CD 1 EQSTAT, DG0 FI 0 EQSTAT, DG0 FI 1 EQSTAT and DG0 STMX EQSTAT all set to "O".

If any of the following is "U", they all must be "U":

- CD 0 EQSTAT
- CD 1 EQSTAT
- FI 0 EQSTAT
- FI 1 EQSTAT
- STMX EQSTAT

and (for PCT LINK 0) both PCTL0 CD 0 EQSTAT and PCTL0 CD 1 EQSTAT.

For DG1:
If any of the following is entered, they all must be entered:

Copyright © 2006 Lucent Technologies

- CD 0 EQSTAT
- CD 1 EQSTAT
- FI 0 EQSTAT
- FI 1 EQSTAT
- STMX EQSTAT

PCTL1 CD 0 EQSTAT and PCTL1 CD 1 EQSTAT (for PCT LINK 0), and also the CLI fields associated with each of these EQSTAT fields.

If any of the following is "U" they all must be "U":

- CD 0 EQSTAT
- CD 1 EQSTAT
- FI 0 EQSTAT
- FI 1 EQSTAT
- STMX EQSTAT

and (for PCT LINK 0) both PCTL1 CD 0 EQSTAT and PCTL1 CD 1 EQSTAT.

Initial and growth offices must have the following EQSTAT values set to "O" if any of them are entered:

- DG1 CD 0 EQSTAT
- DG1 CD 1 EQSTAT
- DG1 FI 0 EQSTAT
- DG1 FI 1 EQSTAT
- DG1 STMX EQSTAT

See the 5855-1 and 5855-2 Records for cross reference of equipment states of DG0/1 fields with CC0/1 EQSTAT, PCTL0/1 EQSTAT, and DG0/1TMX EQSTAT fields.

2.11 CD 0 EQSTAT

Description: Enter the Data Group Common Data 0 Equipage State on the DNU-S.

Required Field for DG0.
Default: O
Valid Entries:

Valid CD 0 EQSTAT Entries

Entry	Definition
G	Growth
O	Operational
U	Unequipped

Data Rules:

For DG0:
CC0 EQSTAT and CC1 EQSTAT must be greater than or equal to DG0 CD 0 EQSTAT and DG0 CD 1 EQSTAT.

DG0 CD 0 EQSTAT and DG0 CD 1 EQSTAT must be greater than or equal to DG0 STMX EQSTAT.

DG0 CD 0 EQSTAT and DG0 CD 1 EQSTAT must be greater than or equal to DG0 FI 0 EQSTAT and DG0 FI 1 EQSTAT.

Copyright © 2006 Lucent Technologies

For PCTL0 PCT LINK 0, the PCTL0 CD 0 EQSTAT must equal DG0 CD 0 EQSTAT.

For all PCT LINK rows, DG0 CD 0 EQSTAT must be greater than or equal to PCTL0 CD 0 EQSTAT.

For DG1:
Before DG1 CD 0 EQSTAT or DG1 CD 1 EQSTAT can be entered, DG0 FI 0 EQSTAT, DG0 FI 1 EQSTAT, and DG0 STMX EQSTAT must be "O".

Initial and growth offices must have the following EQSTAT values set to "O" if any of them are entered:

- DG1 CD 0 EQSTAT
- DG1 CD 1 EQSTAT
- DG1 FI 0 EQSTAT
- DG1 FI 1 EQSTAT
- DG1 STMX EQSTAT

DG1 CD 0 EQSTAT and DG1 CD 1 EQSTAT must be greater than or equal to DG1 STMX EQSTAT.

DG1 CD 0 EQSTAT and DG1 CD 1 EQSTAT must be greater than or equal to DG1 FI 0 EQSTAT and DG1 FI 1 EQSTAT.

For all PCT LINK rows, DG1 CD 0 EQSTAT must be greater than or equal to PCTL1 CD 0 EQSTAT.

For all PCT LINK rows, DG1 CD 0 EQSTAT must be greater than or equal to PCTL1 CD 0 EQSTAT.

For PCTL1 PCT LINK 0, the PCTL1 CD 0 EQSTAT must equal DG1 CD 0 EQSTAT.

If "G" or "O" are entered, then the required EQMH form must have a matching SM number, and both MH SIDE 0 EQSTAT and MH SIDE 1 EQSTAT must be equal to "O".

2.12 CD 1 EQSTAT

Description: Enter the Common Data 1 Equipage State on the DNU-S.

Required Field for DG0.
Default: O
Valid Entries:

Valid CD 1 EQSTAT Entries

Entry	Definition
G	Growth
O	Operational
U	Unequipped

Data Rules:

Initial and growth offices must have CD 1 EQSTAT set to "O".

For DG0:
If any of the following is "U", they all must be "U":

- CD 0 EQSTAT
- CD 1 EQSTAT

- FI 0 EQSTAT
- FI 1 EQSTAT
- STMX EQSTAT,

and (for PCT LINK 0) both PCTL0 CD 0 EQSTAT and PCTL0 CD 1 EQSTAT.

Initial and growth offices must have the following all set to "O":

- DG0 CD 0 EQSTAT
- DG0 CD 1 EQSTAT
- DG0 FI 0 EQSTAT
- DG0 FI 1 EQSTAT
- DG0 STMX EQSTAT

CC0 EQSTAT and CC1 EQSTAT must be greater than or equal to DG0 CD 0 EQSTAT and DG0 CD 1 EQSTAT.

DG0 CD 0 EQSTAT and DG0 CD 1 EQSTAT must be greater than or equal to DG0 STMX EQSTAT.

DG0 CD 0 EQSTAT and DG0 CD 1 EQSTAT must be greater than or equal to DG0 FI 0 EQSTAT and DG0 FI 1 EQSTAT.

PCT LINK:
For PCTL0 PCT LINK 0, the PCTL0 CD 1 EQSTAT must equal DG0 CD 1 EQSTAT.

For all PCT LINK rows, DG0 CD 1 EQSTAT must be greater than or equal to PCTL0 CD 1 EQSTAT.

For DG1:
Before DG1 CD 0 EQSTAT or DG1 CD 1 EQSTAT can be entered, DG0 FI 0 EQSTAT, DG0 FI 1 EQSTAT, and DG0 STMX EQSTAT must be "O".

If any of the following is entered, they all must be entered:

- CD 0 EQSTAT
- CD 1 EQSTAT
- FI 0 EQSTAT
- FI 1 EQSTAT
- STMX EQSTAT

PCTL1 CD 0 EQSTAT and PCTL1 CD 1 EQSTAT (for PCT LINK 0). In addition, the CLI fields associated with each of these EQSTAT fields must be entered.

If any of the following is "U", they all must be "U":

- CD 0 EQSTAT
- CD 1 EQSTAT
- FI 0 EQSTAT
- FI 1 EQSTAT
- STMX EQSTAT

and (for PCT LINK 0) both PCTL1 CD 0 EQSTAT and PCTL1 CD 1 EQSTAT.

DG1 CD 0 EQSTAT and DG1 CD 1 EQSTAT must be greater than or equal to DG1 STMX EQSTAT.

Copyright © 2006 Lucent Technologies

DG1 CD 0 EQSTAT and DG1 CD 1 EQSTAT must be greater than or equal to DG1 FI 0 EQSTAT and DG1 FI 1 EQSTAT.

PCT LINK:
For PCTL1 PCT LINK 0, the PCTL1 CD 1 EQSTAT must equal DG1 CD 1 EQSTAT.

For all PCT LINK rows, DG1 CD 1 EQSTAT must be greater than or equal to PCTL1 CD 1 EQSTAT.

Initial and growth offices must have the following EQSTAT values set to "O" if any of them are entered:

- DG1 CD 0 EQSTAT
- DG1 CD 1 EQSTAT
- DG1 FI 0 EQSTAT
- DG1 FI 1 EQSTAT
- DG1 STMX EQSTAT

2.13 CD 0 CLI

Description: Enter the hexadecimal Common Data 0 Change Level Indicator for the DNU-S.

Required Field for DG0.
Default: 0
Valid Entries: 0 - 7FFFFFFF (hexdecimal)

Data Rules:

For the first hardware version the only valid value is 0. Later hardware versions will require other CLI values.

2.14 CD 1 CLI

Description: Enter the hexadecimal Common Data 1 Change Level Indicator for the DNU-S.

Required Field for DG0.
Default: 0
Valid Entries: 0 - 7FFFFFFF (hexdecimal)

Data Rules:

For the first hardware version the only valid value is 0. Later hardware versions will require other CLI values.

2.15 FI TYPE

Description: Enter the Facility Interface Type.
Default: SFI
Valid Entries: SFI

2.16 FI 0 EQSTAT

Description: Enter the Facility Interface 0 Equipage State for the DNU-S.

Required Field for DG0.
Default: O

Copyright © 2006 Lucent Technologies

Valid Entries:

Valid FI 0 EQSTAT Entries	
Entry	**Definition**
G	Growth
O	Operational
U	Unequipped

Data Rules:

For DG0:
If any of the following is "U", they all must be "U":

- CD 0 EQSTAT
- CD 1 EQSTAT
- FI 0 EQSTAT
- FI 1 EQSTAT
- STMX EQSTAT

and (for PCT LINK 0) both PCTL0 CD 0 EQSTAT and PCTL0 CD 1 EQSTAT.

Initial and growth offices must have

- DG0 CD 0 EQSTAT
- DG0 CD 1 EQSTAT
- DG0 FI 0 EQSTAT
- DG0 FI 1 EQSTAT
- DG0 STMX EQSTAT all set to "O".

DG0 CD 0 EQSTAT and DG0 CD 1 EQSTAT must be greater than or equal to DG0 FI 0 EQSTAT and DG0 FI 1 EQSTAT.

For DG1:
Before DG1 CD 0 EQSTAT or DG1 CD 1 EQSTAT can be entered, DG0 FI 0 EQSTAT, DG0 FI 1 EQSTAT, and DG0 STMX EQSTAT must be "O".

Initial and growth offices must have the following EQSTAT values set to "O" if any of them are entered:

- DG1 CD 0 EQSTAT
- DG1 CD 1 EQSTAT
- DG1 FI 0 EQSTAT
- DG1 FI 1 EQSTAT
- DG1 STMX EQSTAT

If any of the following is entered, they all must be entered:

- CD 0 EQSTAT
- CD 1 EQSTAT
- FI 0 EQSTAT
- FI 1 EQSTAT
- STMX EQSTAT

PCTL1 CD 0 EQSTAT and PCTL1 CD 1 EQSTAT (for PCT LINK 0), and also the CLI fields associated with

Copyright © 2006 Lucent Technologies

each of these EQSTAT fields.

If any of the following is "U", they all must be "U":

- CD 0 EQSTAT
- CD 1 EQSTAT
- FI 0 EQSTAT
- FI 1 EQSTAT
- STMX EQSTAT

and (for PCT LINK 0) both PCTL1 CD 0 EQSTAT and PCTL1 CD 1 EQSTAT.

DG1 CD 0 EQSTAT and DG1 CD 1 EQSTAT must be greater than or equal to DG1 FI 0 EQSTAT and DG1 FI 1 EQSTAT.

2.17 FI 1 EQSTAT

Description: Enter the Facility Interface 1 Equipage State on the DNU-S.

Required Field for DG0.
Default: O
Valid Entries:

Valid FI 1 EQSTAT Entries

Entry	Definition
G	Growth
O	Operational
U	Unequipped

Data Rules:

For DG0:
If any of the following is "U", they all must be "U":

- CD 0 EQSTAT
- CD 1 EQSTAT
- FI 0 EQSTAT
- FI 1 EQSTAT
- STMX EQSTAT

and (for PCT LINK 0) both PCTL0 CD 0 EQSTAT and PCTL0 CD 1 EQSTAT.

Initial and growth offices must have

- DG0 CD 0 EQSTAT
- DG0 CD 1 EQSTAT
- DG0 FI 0 EQSTAT
- DG0 FI 1 EQSTAT
- DG0 STMX EQSTAT all set to "O".

DG0 CD 0 EQSTAT and DG0 CD 1 EQSTAT must be greater than or equal to DG0 FI 0 EQSTAT and DG0 FI 1 EQSTAT.

For DG1:

Copyright © 2006 Lucent Technologies

Before DG1 CD 0 EQSTAT or DG1 CD 1 EQSTAT can be entered, DG0 FI 0 EQSTAT, DG0 FI 1 EQSTAT, and DG0 STMX EQSTAT must be "O".

Initial and growth offices must have the following EQSTAT values set to "O" if any of them are entered:

- DG1 CD 0 EQSTAT
- DG1 CD 1 EQSTAT
- DG1 FI 0 EQSTAT
- DG1 FI 1 EQSTAT
- DG1 STMX EQSTAT

If any of the following is entered, they all must be entered:

- CD 0 EQSTAT
- CD 1 EQSTAT
- FI 0 EQSTAT
- FI 1 EQSTAT
- STMX EQSTAT

PCTL1 CD 0 EQSTAT and PCTL1 CD 1 EQSTAT (for PCT LINK 0), and also the CLI fields associated with each of these EQSTAT fields.

If any of the following is "U", they all must be "U":

- CD 0 EQSTAT
- CD 1 EQSTAT
- FI 0 EQSTAT
- FI 1 EQSTAT
- STMX EQSTAT

and (for PCT LINK 0) both PCTL1 CD 0 EQSTAT and PCTL1 CD 1 EQSTAT.

DG1 CD 0 EQSTAT and DG1 CD 1 EQSTAT must be greater than or equal to DG1 FI 0 EQSTAT and DG1 FI 1 EQSTAT.

2.18 FI 0 CLI

Description: Enter the hexadecimal Facility Interface 0 Change Level Indicator for the DNU-S.

Required Field for DG0.
Default: 0
Valid Entries: 0 - 7FFFFFFF (hexadecimal)

Data Rules:

For the first hardware version the only valid value is 0. Later hardware versions will require other CLI values.

2.19 FI 1 CLI

Description: Enter the hexadecimal Facility Interface 1 Change Level Indicator for the DNU-S.

Required Field for DG0.

Copyright © 2006 Lucent Technologies

Default: 0
Valid Entries: 0 - 7FFFFFFF (hexadecimal)

Data Rules:

For the first hardware version the only valid value is 0. Later hardware versions will require other CLI values.

2.20 STMX EQSTAT

Description: Enter the Spare Transmission Multiplexer Equipage State on the DNU-S.

Required Field for DG0.
Default: O
Valid Entries:

Valid STMX EQSTAT Entries

Entry	Definition
G	Growth
O	Operational
U	Unequipped

Data Rules:

For DG0:
If any of the following is "U", they all must be "U":

- CD 0 EQSTAT
- CD 1 EQSTAT
- FI 0 EQSTAT
- FI 1 EQSTAT
- STMX EQSTAT

and (for PCT LINK 0) both PCTL0 CD 0 EQSTAT and PCTL0 CD 1 EQSTAT.

DG0 CD 0 EQSTAT and DG0 CD 1 EQSTAT must be greater than or equal to DG0 STMX EQSTAT.

For all DG0TMX rows, DG0TMX EQSTAT must not exceed the value of DG0 STMX EQSTAT.

DG1:
DG1 CD 0 EQSTAT and DG1 CD 1 EQSTAT must be greater than or equal to DG1 STMX EQSTAT.

Before DG1 CD 0 EQSTAT or DG1 CD 1 EQSTAT can be entered:

- DG0 FI 0 EQSTAT
- DG0 FI 1 EQSTAT
- DG0 STMX EQSTAT must be "O"

Initial and growth offices must have:

- DG0 CD 0 EQSTAT
- DG0 CD 1 EQSTAT
- DG0 FI 0 EQSTAT
- DG0 FI 1 EQSTAT
- DG0 STMX EQSTAT all set to "O".

Copyright © 2006 Lucent Technologies

Initial and growth offices must have the following EQSTAT values set to "O" if any of them are entered:

- DG1 CD 0 EQSTAT
- DG1 CD 1 EQSTAT
- DG1 FI 0 EQSTAT
- DG1 FI 1 EQSTAT
- DG1 STMX EQSTAT

If any of the following is entered, they all must be entered:

- CD 0 EQSTAT
- CD 1 EQSTAT
- FI 0 EQSTAT
- FI 1 EQSTAT
- STMX EQSTAT

PCTL1 CD 0 EQSTAT and PCTL1 CD 1 EQSTAT (for PCT LINK 0), and also the CLI fields associated with each of these EQSTAT fields.

If any of the following is "U", they all must be "U":

- CD 0 EQSTAT
- CD 1 EQSTAT
- FI 0 EQSTAT
- FI 1 EQSTAT
- STMX EQSTAT

and (for PCT LINK 0) both PCTL1 CD 0 EQSTAT and PCTL1 CD 1 EQSTAT.

For all DG1TMX rows, DG1TMX EQSTAT must not exceed the value of DG1 STMX EQSTAT.

2.21 STMX CLI

Description: Enter the hexadecimal Spare Transmission Multiplexer Change Level Indicator on the DNU-S.

Required Field for DG0.
Default: 0
Valid Entries: 0 - 7FFFFFFF (hexadecimal)

Data Rules:

For the first hardware version the only valid value is 0. Later hardware versions will require other CLI values.

3. FORM ENTRIES 5855-3 RECORD

3.1 BASE AND CONTROL, ESS UNIT

Enter the Base and Control Number and the Office Name on each record.

DATA GROUP 0/1 TMX (DG0TMX/DG1TMX)

The following fields (Section 3.2 - Section 3.4) define the Service and Spare TMUXs (Transmission Multiplexers) list (0 - 5) connected to Data Group 0/1. Entries include equipage status and change level indicator for each TMUX. Please note that the spare TMUX for data group 0/1 is not included in this list, but it is specified in the STMX EQSTAT and STMX CLI fields.

3.2 TMX NUMBER

Description: Enter the Transmission Multiplexer Numbering for data group 0 and data group 1.
Valid Entries: 0 - 5

3.3 EQSTAT

Description: Enter the Equipage State for transmission multiplexers numbered 0 - 5 in data group 0 or data group 1. Do not enter the field if no data is associated with this piece of hardware.
Default: O
Valid Entries:

Valid EQSTAT Entries

Entry	Definition
G	Growth
O	Operational
U	Unequipped

Data Rules:

DG0TMX:
Initial and growth offices must have EQSTAT set to "O".

If either EQSTAT or CLI in the DG0TMX list is entered, then both in that row must be entered.

For all DG0TMX rows, DG0TMX EQSTAT must not exceed the value of DG0 STMX EQSTAT.

DG1TMX:
Initial and growth offices must have EQSTAT set to "O".

If either EQSTAT or CLI in the DG1TMX list is entered, then both in that row must be entered.

For all DG1TMX rows, DG1TMX EQSTAT must not exceed the value of DG1 STMX EQSTAT.

3.4 CLI

Description: The CLI (Change Level Indicator) hexadecimal number specifies the transmission multiplexer change level indicator number for transmission multiplexers numbered 0 to 5 in Data Group 0.
Default: 0
Valid Entries: 0 - 7FFFFFFF (hexadecimal)

Data Rules:

For the first hardware version the only valid value is 0. Later hardware versions will require other CLI values.

If either EQSTAT or CLI in the DG0TMX list is entered, then both in that row must be entered.

If either EQSTAT or CLI in the DG1TMX list is entered, then both in that row must be entered.

PCT LINKS DATA GROUP 0/1 (PCTL0/1)

Copyright © 2006 Lucent Technologies

The following fields (Section 3.5 - Section 3.9) define a list (numbered 0 - 5) of PCT (Peripheral Control and Timing) links connected to Data Group 0 for PCT LINKS DATA GROUP 0 and Data Group 1 for PCT LINKS DATA GROUP 1. Entries include the TSIS (Time Slot Interchanger Slice) board and slot locations, and the equipage states and change level indicators for the PCT connections to both Common Data 0 and Common Data 1.

3.5 PCT LINK

Description: Peripheral Control and Timing Link on Data Group 0/1 Number specifies the number of the peripheral control link on DNU-S Data Group 0/1.
Valid Entries: 0 - 5

Data Rules:

The total number of PCT LINKs (EQDNUS forms with entries in PCTL0/1, TSISBRD and TSISSLOT) in an SM-2000 must not be greater than the entry in the MAX ALLOWABLE FOR SM field on the EQIM form (5700 Record).

3.6 TSIS BRD

Description: Enter the Peripheral Control and Timing Link on Data Group 0/1 Time Slot Interchange Slice Board Number connected to the peripheral control link on DNU-S Data Group 0/1.
Valid Entries: 1 - 9

Data Rules:

TSIS BRD and TSIS SLOT combinations must be unique for PCTL0 and PCTL1.

The combination of TSI BRD and TSI SLOT entries on the EQDI form, the EQPDXU form, the EQDNUS form, and/or the EQNLI form must not be duplicated on any other EQDI form (except when entering the second of a DI pair), on the same or any other EQNLI form, on the same or any other EQPDXU form (except when entering a PCTDX1 where the XAIU CONFIG is equal to "LOW"), or on any EQDNUS form for a given SM.

Each PCTL TSIS BRD entered on the EQDNUS form must be defined on the EQTSI form and the matching EQTSI form must have an EQSTAT value that is greater than or equal to the PCTL0 CD 0 EQSTAT/CD 1 EQSTAT defined on the EQDNUS form (i.e., "O" is greater than "G" which is greater than "U").

For PCTL0:
If TSIS BRD or TSIS SLOT is entered in the PCTL0 list, then:

- both must be entered in that row.
- CD 0 EQSTAT or CD 1 EQSTAT in that row must be entered.
- CD 0 CLI or CD 1 CLI in that row must be entered.

PCTL1:
If TSIS BRD or TSIS SLOT in list PCTL1 is entered, then:

- both must be entered in that row.
- CD 0 EQSTAT or CD 1 EQSTAT in that row must be entered.

Copyright © 2006 Lucent Technologies

3.7 TSIS SLOT

Description: The Peripheral Control and Timing Link Interface on Data Group 0 Time Slot Interchange Slice Slot Number field is used to specify the time slot interchanger slice slot number connected to the peripheral control link on DNU-S Data Group 0/1.
Valid Entries: 0 - 3

Data Rules:

TSIS BRD and TSIS SLOT combinations must be unique for PCTL0 and PCTL1.

The combination of TSI BRD and TSI SLOT entries on the EQDI form, the EQDNUS form, and/or EQNLI form must not be duplicated on any other EQDI form (except when entering the second of a DI pair), on the same or any other EQNLI form, or on any EQDNUS form for a given SM.

For PCTL0:
If TSIS BRD or TSIS SLOT is entered in the PCTL0 list, then:

- both must be entered in that row.
- CD 0 EQSTAT or CD 1 EQSTAT in that row must be entered.
- CD 0 CLI or CD 1 CLI in that row must be entered.

PCTL1:
If TSIS BRD or TSIS SLOT in list PCTL1 is entered, then:

- both must be entered in that row.
- CD 0 EQSTAT or CD 1 EQSTAT in that row must be entered.

3.8 CD 0/1 EQSTAT

Description: The Peripheral Control and Timing Link Interface on Data Group 0/1 Common Data 0/1 Equipage State is used to specify the equipage state of the peripheral link on the DNU-S Data Group 0/1 Common Data 0/1.
Default: O
Valid Entries:

Valid EQSTAT Entries

Entry	Definition
G	Growth
O	Operational
U	Unequipped

Data Rules:

For PCTL0:
Initial and growth offices must have CD 0 EQSTAT and CD 1 EQSTAT set to "O".

If CD 0 EQSTAT or CD 1 EQSTAT in list PCTL0 is entered, then TSIS BRD and TSIS SLOT in that row must be entered.

Copyright © 2006 Lucent Technologies

If CD 0 EQSTAT in list PCTL0 is entered, CD 0 CLI in that row must be entered.

If CD 1 EQSTAT in list PCTL0 is entered, CD 1 CLI in that row must be entered.

PCTL0 CD 0 EQSTAT must equal DG0 CD 0 EQSTAT and PCTL0 CD 1 EQSTAT must equal DG0 CD 1 EQSTAT.

For PCTL1:
Initial and growth offices must have CD 0 EQSTAT and CD 1 EQSTAT set to "O".

If CD 0 EQSTAT or CD 1 EQSTAT in list PCTL1 is entered, then TSIS BRD and TSIS SLOT in that row must be entered.

If CD 0 EQSTAT in list PCTL1 is entered, CD 0 CLI in that row must be entered.

If CD 1 EQSTAT in list PCTL1 is entered, then CD 1 CLI in that row must be entered.

PCTL1 CD 0 EQSTAT must equal DG1 CD 0 EQSTAT and PCTL1 CD 1 EQSTAT must equal DG1 CD 1 EQSTAT.

For all PCT LINK rows:

- DG0 CD 0 EQSTAT must be greater than or equal to PCTL0 CD 0 EQSTAT.
- DG0 CD 1 EQSTAT must be greater than or equal to PCTL0 CD 1 EQSTAT.
- DG1 CD 0 EQSTAT must be greater than or equal to PCTL1 CD 0 EQSTAT.
- DG1 CD 1 EQSTAT must be greater than or equal to PCTL1 CD 1 EQSTAT.

3.9 CD 0/1 CLI

Description: Peripheral Control and Timing Link Interface on Data Group 0/1 Common Data 0/1 Change Level Indicator Number is used to specify the change level indicator hexadecimal number for the peripheral link on the DNU-S Data Group 0/1 Common Data 0/1.
Default: 0
Valid Entries: 0 - 7FFFFFFF (hexadecimal)

Data Rules:

For the first hardware version the only valid value is 0. Later hardware versions will require other CLI values.

For PCTL0: If CD 0 CLI in list PCTL0 is entered, then CD 0 EQSTAT in that row must be entered.

If CD 1 CLI in list PCTL0 is entered, then CD 1 EQSTAT in that row must be entered.

For PCTL1: If CD 0 CLI in list PCTL1 is entered, then CD 0 EQSTAT in that row must be entered.

If CD 1 CLI in list PCTL1 is entered, then CD 1 EQSTAT in that row must be entered.

Copyright © 2006 Lucent Technologies

```
SCREEN 1 OF 4             OFFICE DATA ADMINISTRATION
(5855-1/2/3)        DIGITAL NETWORKING UNIT SONET (SM2000)

*1. SM          ___              DATA GROUP 0 (DG0)          DATA GROUP 1 (DG1)
*2. DNUS        _          10. CD 0 EQSTAT O           21. CD 0 EQSTAT _
#3. EQL BAY     ___        11. CD 1 EQSTAT O           22. CD 1 EQSTAT _
#4. EQL UNVER   __         12. CD 0 CLI    00000000    23. CD 0 CLI    ________
#5. EQL AISLE   ____       13. CD 1 CLI    00000000    24. CD 1 CLI    ________
 6. CC0 EQSTAT O               FI TYPE     SFI             FI TYPE     ___
 7. CC1 EQSTAT O           15. FI 0 EQSTAT O           26. FI 0 EQSTAT _
 8. CC0 CLI    00000000    16. FI 1 EQSTAT O           27. FI 1 EQSTAT _
 9. CC1 CLI    00000000    17. FI 0 CLI    00000000    28. FI 0 CLI    ________
                           18. FI 1 CLI    00000000    29. FI 1 CLI    ________
                           19. STMX EQSTAT O           30. STMX EQSTAT _
                           20. STMX CLI    00000000    31. STMX CLI    ________
```

```
eqdnus                            5ESS SWITCH
SCREEN 2 OF 4             OFFICE DATA ADMINISTRATION
(5855-1/2/3)        DIGITAL NETWORKING UNIT SONET (SM2000)

>32. DATA GROUP 0 TMX (DG0TMX)  >36. DATA GROUP 1 TMX (DG1TMX)

       TMX                              TMX
  ROW NUMBER EQSTAT   CLI          ROW NUMBER EQSTAT   CLI

   1    0      _    ________        1    0      _    ________
   2    1      _    ________        2    1      _    ________
   3    2      _    ________        3    2      _    ________
   4    3      _    ________        4    3      _    ________
   5    4      _    ________        5    4      _    ________
   6    5      _    ________        6    5      _    ________
```

```
eqdnus                            5ESS SWITCH
SCREEN 3 OF 4             OFFICE DATA ADMINISTRATION
(5855-1/2/3)        DIGITAL NETWORKING UNIT SONET (SM2000)

             >40. PCT LINKS DATA GROUP 0 (PCTL0)

     PCT     TSIS            CD 0                CD 1
ROW  LINK  BRD  SLOT   EQSTAT   CLI        EQSTAT   CLI

 1    0     _    _       _    ________       _    ________
```

```
 2    1     _    _       _    _________       _    _________
 3    2     _    _       _    _________       _    _________
 4    3     _    _       _    _________       _    _________
 5    4     _    _       _    _________       _    _________
 6    5     _    _       _    _________       _    _________
```

```
eqdnus                            5ESS SWITCH           _
SCREEN 4 OF 4              OFFICE DATA ADMINISTRATION
(5855-1/2/3)         DIGITAL NETWORKING UNIT SONET (SM2000)

             >48. PCT LINKS DATA GROUP 1 (PCTL1)

     PCT     TSIS            CD 0                CD 1
ROW  LINK  BRD  SLOT   EQSTAT   CLI        EQSTAT   CLI

 1    0     _    _       _    _________       _    _________
 2    1     _    _       _    _________       _    _________
 3    2     _    _       _    _________       _    _________
 4    3     _    _       _    _________       _    _________
 5    4     _    _       _    _________       _    _________
 6    5     _    _       _    _________       _    _________
```

Figure 1 SAMPLE EQDNUS FORM 5E9(2) AND LATER SOFTWARE RELEASES

Copyright © 2006 Lucent Technologies

SEC. 58: 5856 RECORD
MESSAGE HANDLER (SM-2000) - EQMH

1. GENERAL

The 5856 Record is available with the 5E9(2) and later Software Releases. The Message Handler (SM-2000) form is used to equip the message handler for an SM-2000 class processor. The Message Handler MH1 is responsible for providing the messaging interface for the DNU-S.

The Message Handler can only be grown on an SM-2000 class processor.

This form has been added to support the DNU-S feature.

1.1 Recent Change View

The corresponding Recent Change View for this form is 19.13.

2. FORM AND RECORD ENTRIES

2.1 BASE AND CONTROL, ESS UNIT

Enter the Base and Control Number and the Office Name on each record.

2.2 *SM

Description: The SM field is used to specify the switching module number.

Required Field.
Valid Entries: 1 - 192

2.3 *MH

Description: The MH field is used to specify the message handler number.

Required Field.
Default: Null
Valid Entries: 1 or 2

Data Rules:

Each SM with MH values defined on the EQMH form has a maximum of 31 SPYDER-T timeslots available for allocation (bit 0 is reserved). The SM cannot exceed the maximum capacity of 31 total timeslots. A maximum of 6 Timeslots are allowed per equipped DNU-S. Six timeslots are allocated per each EQDNUS form, three timeslots are allocated per each CC side if "U" is not entered in CC0 EQSTAT or CC1 EQSTAT fields.

For 5E12 and later, when MH is 1 on the EQMH form, MH SIDE 0 CLI and MH SIDE 1 CLI must be 0 or, when MH is 2, MH SIDE 0 CLI and MH SIDE 1 CLI can be 0 or 3.

2.4 MH SIDE 0 EQSTAT

Description: The MH SIDE 0 EQSTAT field is used to specify the equipage state of the message handler on side 0.

Copyright © 2006 Lucent Technologies

Required Field.
Default: O
Valid Entries:

Valid MH SIDE 0 EQSTAT Entries	
Entry	**Definition**
G	Growth
O	Operational
U	Unequipped

Data Rules:

Initial and growth offices must have MH SIDE 0 EQSTAT and MH SIDE 1 EQSTAT set to "O".

If MH SIDE 0 EQSTAT is "U", MH SIDE 1 EQSTAT cannot be "O".

If MH SIDE 1 EQSTAT is "U" or not entered, MH SIDE 0 EQSTAT cannot be "O".

2.5 MH SIDE 0 CLI

Description: Enter the MH SIDE 0 CLI hexadecimal number for the change level indicator for the message handler on Side 0.

Required Field.
Default: 0
Valid Entries: 0 - 7FFFFFFF (hexadecimal)

Data Rules:

For the first hardware version the only valid value is 0. Later hardware versions will require other CLI values.

2.6 MH SIDE 1 EQSTAT

Description: Enter the equipage state of Side 1 of the Message Handler.

Valid MH SIDE 1 EQSTAT Entries	
Entry	**Definition**
G	Growth
O	Operational
U	Unequipped

Data Rules:

Initial and growth offices must have MH SIDE 0 EQSTAT and MH SIDE 1 EQSTAT set to "O".

If MH SIDE 0 EQSTAT is "U", then MH SIDE 1 EQSTAT cannot be "O".

If MH SIDE 1 EQSTAT is "U" or not entered, then MH SIDE 0 EQSTAT cannot be "O".

If MH SIDE 1 EQSTAT is entered, MH SIDE 1 CLI must be entered.

2.7 MH SIDE 1 CLI

Description: Enter the hexadecimal change level indicator for the Message Handler on Side 1.
Valid Entries: 0 - 7FFFFFFF

Data Rules:

Copyright © 2006 Lucent Technologies

For the first hardware version the only valid value is 0. Later hardware versions will require other CLI values.

If MH SIDE 1 CLI is entered, then MH SIDE 1 EQSTAT must be entered.

```
eqmh                            5ESS SWITCH            _
                          OFFICE DATA ADMINISTRATION
(5856)                     MESSAGE HANDLER (SM2000)

*1. SM                ___
*2. MH                1
 3. MH SIDE 0 EQSTAT O
 4. MH SIDE 0 CLI    00000000
 5. MH SIDE 1 EQSTAT _
 6. MH SIDE 1 CLI    ________
```

Figure 1 SAMPLE EQMH FORM 5E9(2) AND LATER SOFTWARE RELEASES

```
eqmh                            5ESS SWITCH            _
                          OFFICE DATA ADMINISTRATION
(5856)                     MESSAGE HANDLER (SM2000)

*1. SM                ___
    MH                1
 3. MH SIDE 0 EQSTAT O
 4. MH SIDE 0 CLI    00000000
 5. MH SIDE 1 EQSTAT _
 6. MH SIDE 1 CLI    ________
```

Figure 2 SAMPLE EQMH FORM 5E12 AND LATER SOFTWARE RELEASES

Copyright © 2006 Lucent Technologies

SEC. 59: 5857-1/2 RECORD
DIGITAL NETWORKING UNIT SONET FOR STE AND STS (SM2000) - EQSTE

1. GENERAL

The 5857-1/2 Record is available with 5E9(2) and later Software Releases. The DNU-S (Digital Networking Unit-SONET) for STE (SONET Termination Equipment) and STS (Synchronous Transport Signal) form defines the STE facility in the DNU-S. For more information on DNU-S, see Division 2, Section 9C.

STSX-1 interface consists of the STE, STS-1 Path VT1.5 Path, and the DS1 Path, all of which are terminated by the DNU-S.

The STE is the facility that terminates the SONET Section and Line layers. It is the parent of the STS-1, VT1.5s, and DS1s.

The STS is the basic SONET building block and implies a rate and format, not a transmission medium. It is the child of the STE and parent of the VT1.5s and DS1s.

The CGA (Carrier Group Alarm) data is associated with the VT/DS1 and STE/STS facilities. Included in the CGA data is a hash index into an internal TM (Terminal Maintenance) data structure. The hash indexes are automatically assigned during the RC/V and ODA processing. During de-growth, RC initializes the associated hash indexes to "N". The hash index is transparent to the user, i.e, no hash index office data is entered via RC or ODA. However, only 522 hash indexes are available per switching module. One hash index is allocated to each instance of the following for a specific SM:

- 1 per each pair STE/STS on a specified SM (EQSTE form). (The EQSTE form is associated with the DNU-S.)
- 1 per each VT (Virtual Tributary) on a specified SM (EQVT form). (The EQVT form is associated with the DNU-S.)
- 1 per each DFI (Digital Facility Interface) of a DLTU (Digital Line/Trunk Unit) where FAC IND is 0 or 1, and DFI TYPE is not "H1" or "H2", i.e., DFI USAGE of "H1" and "H2" are not counted (EQDUP form). (The EQDUP form is not associated with the DNU-S.)
- 1 per each DFI-2 (2 per EQDUP form) where FAC IND is 3.
- 1 per pack - POS, EQST, CLI, CLEI combination; 30 packs per DCLU on EQDCLP form (the EQDCLP form is not associated with the DNU-S).
- 1 per IFAC - EQSTAT, SUP MTHD, PUB43801 combination; 20 per IDCU on the EQIFAC form) (the EQIFAC form is not associated with the DNU-S).

The sum of the above total number of allocated hash indexes (instances) cannot be greater then 522 for any one specific SM.

1.1 Recent Change View

The corresponding Recent Change View for this form is 20.12.

2. FORM AND RECORD ENTRIES

Copyright © 2006 Lucent Technologies

2.1 BASE AND CONTROL, ESS UNIT

Enter the Base and Control Number and the Office Name on each record.

2.2 * SM

Description: Enter the switching module number.

Required Field.
Valid Entries: 1 - 192

Data Rules:

The maximum number of DNU-S Performance Monitoring Groups may not be more than 50 unique PM GROUP names per SM from the combination of PM GROUP(s) defined on EQSTE form(s) as STE PM GROUP, and defined on EQVT form(s) as VT PM GROUP and DS1S PM GROUP.

For each SM entered on this form, a corresponding SM must be entered on the EQIM form SM.

2.3 * DNUS

Description: Enter the digital networking unit SONET number.

Required Field.
Valid Entries: 0 - 7

2.4 * DATA GROUP

Description: Enter the DNU-S data group number.

Required Field.
Valid Entries: 0 - 1

2.5 * STE

Description: Enter the SONET termination equipment number on the DNU-S.

Required Field.
Valid Entries:
5E12 and earlier: 0 - 5
5E13 and later: 1 - 6

2.6 STE EQSTAT

Description: Enter the STE (SONET termination equipment) equipage state on the DNU-S.

Required Field.
Default:

For ODA: O
For RC: G

Valid Entries:

Copyright © 2006 Lucent Technologies

Valid STE EQSTAT Entries	
Entry	**Definition**
G	Growth
O	Operational
U	Unequipped

Data Rules:

Initial and growth offices must have STE EQSTAT and STS EQSTAT set to "O".

If STS EQSTAT is "O", then STE EQSTAT must be "O".

If STS EQSTAT is "G", then STE EQSTAT must be "O" or "G".

The STE EQSTAT value cannot be greater than the corresponding DG0TMX/DG1TMX EQSTAT for the matching DG0TMX/DG1TMX TMX NUMBER (where STE matches the TMX NUMBER) on the EQDNUS form, and the EQDNUS form must be defined for the STE value. Since the TMUX number on this form is the same in DATA GROUP 0 and DATA GROUP 1, the DATA GROUP field on the EQSTE form must be used to determine the corresponding DATA GROUP TMUX number to compare against on this form.

Also the STE EQSTAT cannot be greater than the DG0/DG1 FI 0 EQSTAT and FI 1 EQSTAT on the associated EQDNUS form.

2.7 STE PM GROUP

Description: Enter the SONET termination equipment line and section performance monitoring group assigned to the STE. (See also DNUPM form, Division 5, Section 5L.)

Required Field.
Default: STEDEF
Valid Entries: 1 - 8 characters.

Data Rules:

The STE PM GROUP cannot be "/STEGDEF".

If the STE PM GROUP is entered, then the corresponding DNUPM form(s) must be defined with PM TYPE of "STE". DNUPM form corresponds with this form if PM GROUP on the DNUPM form matches the STE PM GROUP on this form.

2.8 STE FACILITY ID

Description: Enter the facility identifier on the STE.
Valid Entries: 1 - 25 characters.

2.9 LI CLI

Description: Enter the hexadecimal link interface change level indicator on the facility.

Required Field.
Default: 0
Valid Entries: 0 - 7FFFFFFF (hexadecimal)

Data Rules:

Copyright © 2006 Lucent Technologies

For the first hardware version the only valid value is 0. Later hardware versions will require other CLI values. See Division 8, Section 1 for CLI values.

2.10 LINE BUILD OUT

Description: Is line build out required? The cable length and type determine if line build out is required. Line build out is a signal attenuation function provided in the transmit path of the STSX-1 interface. Signal attenuation is needed to prevent excessive signal strength at the electrical cross connect panel when using short coax cable lengths. When the LINE BUILD OUT field is set to "Y", attenuation is active. When the LINE BUILD OUT field is set to "N", no attenuation is applied. The following table indicates the cable length thresholds that require attenuation.

Cable Length vs Line Build Out

Cable Type	LINE BUILD OUT	
	Cable Length For "Y" Entered	Cable Length For "N" Entered
735A	<< = 120 feet	>> 120 feet
734A	<< = 225 feet	>> 225 feet
728A	<< = 225 feet	>> 225 feet

NOTE: If an electrical cross connect is located between the DNU-S and SONET transmission equipment, cable length refers to the distance between the DNU-S and the electrical cross connect. Otherwise, cable length refers to the total distance between the DNU-S and the SONET transmission equipment.

Required Field.
Default: N
Valid Entries: Y, N

2.11 STS EQSTAT

Description: Enter the synchronous transport signal equipage state on the DNU-S.

Required Field.
Default:

For ODA: O
For RC: G

Valid Entries:

Valid STS EQSTAT Entries

Entry	Definition
G	Growth
O	Operational
U	Unequipped

Data Rules:

Initial and growth offices must have STE EQSTAT and STS EQSTAT set to "O".

If STS EQSTAT is "O", STE EQSTAT must be "O".

If STS EQSTAT is "G", STE EQSTAT must be "O" or "G".

STS PATH TRACE (STS)

Copyright © 2006 Lucent Technologies

The following fields provide the capability to add a character string to identify the STS path from either the transmit or expected signal.

2.12 TRANSMIT

Description: Enter identifying characters for the transmit STS Path Trace. This field supports the STS Path Trace feature. See Division 2, Section 9R.

Software Release: 5E13 and later
Valid Entries: up to 62 characters

2.13 EXPECTED

Description: Enter identifying characters for the expected STS Path Trace. This field supports the STS Path Trace feature. See Division 2, Section 9R.

Software Release: 5E13 and later
Valid Entries: up to 62 characters

```
eqste                           5ESS SWITCH            _
                          OFFICE DATA ADMINISTRATION
(5857)      DIGITAL NETWORKING UNIT SONET FOR STE AND STS (SM2000)

*1. SM              ___
*2. DNUS            _
*3. DATA GROUP      _
*4. STE             _
 5. STE EQSTAT      O
 6. STE PM GROUP    STEDEF
 7. STE FACILITY ID __________________________
 8. LI CLI          00000000
10. LINE BUILD OUT  N
11. STS EQSTAT      O
```

Figure 1 SAMPLE EQSTE FORM 5E13 AND LATER SOFTWARE RELEASES

```
eqste                            5ESS Switch           _
                          OFFICE DATA ADMINISTRATION
(5857)            Digital Networking Unit SONET for STE and STS (SM2000)

*1. SM              ___                            9. LINE BUILD OUT N
*2. DNUS            _                             10. STS EQSTAT     O
*3. DATA GROUP      _
*4. STE             _
 5. STE EQSTAT      O
 6. STE PM GROUP    STEDEF
 7. STE FACILITY ID __________________________
 8. LI CLI          00000000
```

Copyright © 2006 Lucent Technologies

```
                         STS PATH TRACE (STS)
11. TRANSMIT ____________________________________________________________
12. EXPECTED ____________________________________________________________
```

Figure 2

Copyright © 2006 Lucent Technologies

SEC. 60: 5858 RECORD
DIGITAL NETWORKING UNIT SONET VIRTUAL TRIBUTARY (SM2000) - EQVT

1. GENERAL

The 5858 Record is available with 5E9(2) and later Software Releases.

The DNU-S (Digital Networking Unit - SONET) Virtual Tributary (SM-2000) form is used for the equipage of the VT (Virtual Tributary) and the DS1S (Digital Signal Level 1 SONET) facility on a DNU-S - feature number (99-5E-1427). For more information on DNU-S, see Division 2, Section 9C.

Effective with the 5E13 and later Software Releases, the DNU-S VT Group Number feature (99-5E-4424) introduced a new VT facility (DS1) numbering scheme for DNU-S provisioning. The VT field was split and renamed VT GROUP and VT MEMBER. A new STE (SONET Termination Equipment) field was added, and the "NEN" OE Number field defined for trunks was modified accordingly. To accommodate this change, a conversion of the former VT field number to the new VT GROUP and VT MEMBER number is applied (see the conversion table provided at the VT field). For more information on the 99-5E-4424 feature, see Division 2, Section 9Q.

Effective as a 5E13 and later Software Update, the RSM (Remote Switching Module) on DNU-S feature (99-5E-4209) is added. For this feature, a new APPLICATION TYPE ("RSM") was added to provide the capability to assign a Remote Switching Module to DS1 facilities terminating on a DNU-S. This feature only applies to DNU-S units that utilize the SFI (STS Facility Interface). For more information, see Division 2, Section 9S.

Also added as a 5E13 and later Software Update is the Wireless Trunks on DNU-S feature (99-5E-3553). For this feature, a new field, AFAC ID, was added to define the Autoplex Facility Identifier for wireless trunks. For more information, see Division 2, Section 8L.

The SONET digital switch interface terminates the STSX-1 interface for the intraoffice environment. It is a 51.84 Mb/s electrical interface which carries intraoffice trunks because it is limited to a maximum of 900 feet. However, the actual digital trunks may be "interoffice" since the digital trunk in a DS0, within the DS1 facility, may terminate on another switch, using the SONET transmission equipment for the physical wire connection.

The trunks carried by the STSX-1 interface are digital: the DNU-S does not support analog trunks.

The STSX-1 interface is made up of the following layers:

- STE (SONET Termination Equipment)
  - Section
  - Line
- STS-1 Path
- VT Path
- DS1 Path

The Section and Line layers have been combined and are referred to as the STE (SONET Termination Equipment). The STE, as well as the STS-1, VT, and DS1 are each considered to be a separate "facility".

Copyright © 2006 Lucent Technologies

The VT1.5, a 1.728 Mb/s facility, carries one DS1 (1.544 MB/s). The VT tributaries consist of asynchronous mapped DS1s in a floating mode of operation.

The DS1S facility is similar to existing DS1 (Digital Signal Level 1) facilities. It is a 1.544 Mb/s facility which carries up to 24 DS0s (64 kb/s).

1.1 Carrier Group Alarm Hash Indexes

The CGA (Carrier Group Alarm) data is associated with the VT/DS1 and STE/STS facilities. For 5E9(2) and later, only 522 hash indexes are available per switching module. One hash index is allocated to each instance of the following for a specific SM:

- 1 per each pair STE/STS on a specified SM (EQSTE form). (The EQSTE form is associated with the DNU-S.)
- 1 per each VT (Virtual Tributary) on a specified SM (EQVT form). (The EQVT form is associated with the DNU-S.)
- 1 per each DFI (Digital Facility Interface) of a DLTU (Digital Line/Trunk Unit) where FAC IND is 0 or 1, and DFI TYPE is not "H1" or "H2"; i.e., DFI USAGE of "H1" and "H2" are not counted (EQDUP form). (The EQDUP form is associated with DLTU.)
- 1 per each DFI-2 (2 per EQDUP form) where FAC IND is 3. (The EQDUP form is associated with DLTU.)
- 1 per pack - POS, EQST, CLI, CLEI combination. (30 packs per DCLU on EQDCLP form) (The EQDCLP form is associated with DCLU.)
- 1 per IFAC - EQSTAT, SUP MTHD, PUB43801 combination. (20 per IDCU on the EQIFAC form) (The EQIFAC form is associated with IDCU.)

The sum of the above total number of allocated hash indexes (instances) cannot be greater than 522 for any one specific SM.

1.2 Recent Change View

The corresponding Recent Change View for this form is 20.24.

2. FORM AND RECORD ENTRIES

2.1 BASE AND CONTROL, ESS UNIT

Enter the Base and Control Number and the Office Name on each record.

2.2 * SM

Description: Enter the switching module number.

Required Field.
Valid Entries: 1 - 192

Data Rules:

Copyright © 2006 Lucent Technologies

Only 50 unique PM GROUP names are allowed per SM from the combination of PM GROUPs defined on EQSTE forms as STE PM GROUP, and defined on EQVT forms as VT PM GROUP and DS1S PM GROUP.

Each SM entered on this form must also be entered on an EQIM form.

Each value of SM entered on the EQDNUS, EQSTE, and EQVT forms must have a corresponding EQIM form with the same SM value where the value entered for CONFIGURATION supports Digital Networking Unit-SONET. The "SM2000" value for CONFIGURATION supports Digital Networking Unit-SONET.

2.3 * DNUS

Description: Enter the DNU-S (Digital Networking Unit SONET) number.

Required Field.
Valid Entries: 0 - 7

2.4 * DATA GROUP

Description: Enter the DNU-S (Digital Networking Unit SONET) data group number.

Required Field.
Valid Entries: 0 - 1

2.5 * STE

Description: Enter the STE (SONET Termination Equipment) number. This field was implemented at the time of the DNU-S VT Group Number feature to comply with Bellcore requirement R6-3 [938] for numbering conventions. (See Division 2, Section 9Q.)

Software Release: 5E13 and later
Required Field.
Valid Entries: 1 - 6

2.6 * STS

Description: Enter the STS (Synchronous Transport Signal) number. This field was modified at the time of the DNU-S VT Group Number feature to comply with Bellcore requirement R6-3 [938] for numbering conventions. (See Division 2, Section 9Q.)

Required Field.
Default:

5E13 and later: 1
Valid Entries:
- 5E12 and earlier: 0 - 5
- 5E13 and later: 1 (only valid entry)

2.7 * VT

Description: Enter the VT (Virtual Tributary) number on the DNU-S. For 5E13 and later, the VT field was replaced by the VT GROUP and VT MEMBER fields to support the DNU-S VT Group Number feature to satisfy Bellcore requirement R6-2 [361v2] for numbering conventions. (See Division 2, Section 9Q.)

Copyright © 2006 Lucent Technologies

The TMUX (Transmission Multiplexer) circuit pack maps the 28 possible VT entries into a SONET STS1 signal format of seven groups of four. The 28 VT entries in this field are organized into those groups as shown in the following two tables.

NOTE: Prior to 5E13, the VT field was used to enter the VT. Effective with the 5E13 Software Release, the VT GROUP and VT MEMBER fields are used.

DNUS - TMUX VT Entry Correspondence with SONET Signal Group and Member Number		
VT Entry	SONET Signal	
	Group Number Entry	VT1.5 Member Number Entry
1	1	1
2	2	1
3	3	1
4	4	1
5	5	1
6	6	1
7	7	1
8	1	2
9	2	2
10	3	2
11	4	2
12	5	2
13	6	2
14	7	2
15	1	3
16	2	3
17	3	3
18	4	3
19	5	3
20	6	3
21	7	3
22	1	4
23	2	4
24	3	4
25	4	4
26	5	4
27	6	4
28	7	4

The following table shows the same relationship of VT entries to the 7 groups of 4 VT1.5 members in a matrix which provides the position of the VT1.5s within the STS.

SONET Signal Group	VT1.5 Members			
	1	2	3	4
1	VT = 01	VT = 08	VT = 15	VT = 22
2	VT = 02	VT = 09	VT = 16	VT = 23
3	VT = 03	VT = 10	VT = 17	VT = 24
4	VT = 04	VT = 11	VT = 18	VT = 25
5	VT = 05	VT = 12	VT = 19	VT = 26
6	VT = 06	VT = 13	VT = 20	VT = 27
7	VT = 07	VT = 14	VT = 21	VT = 28

2.8 *VT GROUP

Description: Enter the Virtual Tributary Group number. This field supports the DNU-S VT Group Number feature. (See Division 2, Section 9Q.)

Software Release: 5E13 and later
Required Field.

Copyright © 2006 Lucent Technologies

Valid Entries: 1 - 7

2.9 *VT MEMBER

Description: Enter the Virtual Tributary Member number. This field supports the DNU-S VT Group Number feature. (See Division 2, Section 9Q.)

Software Release: 5E13 and later
Required Field.
Valid Entries: 1 - 4

2.10 VT EQSTAT

Description: Enter the virtual tributary equipage state.

Required Field.
Default:

For ODA: O
For RC: G

Valid Entries:

Valid VT EQSTAT Entries

Entry	Definition
G	Growth
O	Operational
U	Unequipped

Data Rules:

During an INSERT operation in Recent Change, VT EQSTAT must not be "O".

Initial and growth offices must have VT EQSTAT and DS1S EQSTAT set to "O".

If "O" is entered, then DS1S EQSTAT must be "G" or "O".

If "G" is entered, DS1S EQSTAT must be "G".

If "U" is entered, then DS1S EQSTAT must be "U".

The value entered in VT EQSTAT cannot be greater than the corresponding PCTL0/PCTL1 CD 0 EQSTAT. In addition, it cannot be greater then CD 1 EQSTAT for the matching PCTL0/PCTL1 PCTLINK on the EQDNUS form (5855 Record). (STS on this form matches PCTLINK on the EQDNUS form). Both CD 0 EQSTAT and CD 1 EQSTAT must be entered and must be greater than or equal to VT EQSTAT. In addition, if VT EQSTAT is "G", then both CD 0 EQSTAT and CD 1 EQSTAT must be defined and must be "O" within the associated DATA GROUP (PCTL0/PCTL1).

For all VT values, the STS EQSTAT field must be entered on the EQSTE form and VT EQSTAT cannot be greater than the corresponding STS EQSTAT found by matching EQVT SM/DNUS/DATA GROUP/STS fields with EQSTE SM/DNUS/DATA GROUP/STE fields. In addition, if VT EQSTAT is "G", then STS EQSTAT must be "O".

For 5E12 and earlier:

Copyright © 2006 Lucent Technologies

- When PRIGRP forms have FACILITY LIST entries assigned with EQUIPMENT TYPE of "DNUS", the SM, EQUIPMENT NUMBER[1,1], EQUIPMENT NUMBER[2,2], EQUIPMENT NUMBER[3,3], and EQUIPMENT NUMBER[4,5] entered on the PRIGRP form must be defined on an EQVT form as SM, DNUS, DATA GROUP, STS, and VT, respectively. VT EQSTAT and DS1S EQSTAT must both be "O".

For 5E13 and later:

- When PRIGRP forms have FACILITY LIST entries assigned with EQUIPMENT TYPE of "DNUS", the SM, EQUIPMENT NUMBER[1,1], EQUIPMENT NUMBER[2,2], EQUIPMENT NUMBER[3,3], and EQUIPMENT NUMBER[4,4], EQUIPMENT NUMBER[5,5], and EQUIPMENT NUMBER[6,6], entered on the PRIGRP form must be defined on an EQVT form as SM, DNUS, DATA GROUP, STE, STS, VT GROUP, and VT MEMBER, respectively. VT EQSTAT and DS1S EQSTAT must both be "O".

2.11 VT PM GROUP

Description: Enter the virtual tributary performance monitoring group.

Required Field.
Default: VT1DEF
Valid Entries: 1 - 8 characters

Data Rules:

"/VT1GDEF" cannot be entered.

If a VT PM GROUP is defined, then a corresponding DNUPM form must be defined with PM TYPE of "VT1". Forms correspond if the VT PM GROUP on this form matches the PM GROUP on the DNUPM form.

No more than 50 unique PM GROUP names are allowed per SM from the combination of PM GROUPs defined on EQSTE forms as STE PM GROUP, and defined on EQVT forms as VT PM GROUP and DS1S PM GROUP.

2.12 VT TYPE

Description: The VT TYPE field is used to specify the type of the virtual tributary. For 5E9(2) - 5E12, "ASYNC" indicating asynchronous is automatically entered in this field and cannot be changed. For 5E13 and later, the Byte-Synchronous value was added to support the DNU-S Support for B-Sync DS1 Mapping to VT1.5 feature (99-5E-4151).
Default: ASYNC
Valid Entries:
5E9(2) and later: [A]SYNC
5E13 and later: [B]SYNC

NOTE: If VT TYPE is "BSYNC", the far end and any network elements along the path, must also be setup/compatible with "BSYNC".

2.13 VT MODE

Description: The VT MODE field specifies the mode of the virtual tributary. The only valid value is "RB" (robbed bit), which is automatically entered and cannot be changed.
Default: RB

Valid Entries:
5E12 and earlier: RB (Robbed Bit)
5E13 and later: DMI (DMI mode)

Data Rules:

When DMI is entered, APPLICATION TYPE must be "RSM".

2.14 VT SIZE

Description: The VT SIZE field is used to specify the size of the virtual tributary. The only valid value is 1.5, which is automatically entered and cannot be changed.

Virtual Tributary Line Rates

Optical Carrier Level	Electrical Equivalent	Line Rate (Mb/s)
VT1.5	DS-1 (1.544Mb/s)	1.728

Default: 1.5
Valid Entries: 1.5

2.15 DS1S EQSTAT

Description: Enter the DS1S equipage state of the DNU-S.

Required Field.
Default:

For ODA: O
For RC: G

Valid Entries:

Valid DS1S EQSTAT Entries

Entry	Definition
G	Growth
O	Operational
U	Unequipped

Data Rules:

During a Recent Change INSERT operation the DS1S EQSTAT must not be "O".

Initial and growth offices must have VT EQSTAT and DS1S EQSTAT set to "O".

2.16 DS1S PM GROUP

Description: Enter the Digital Signal Level 1 SONET performance monitoring group.

Required Field.
Default: DS1SDEF
Valid Entries: 1 - 8 characters

Data Rules:

Copyright © 2006 Lucent Technologies

DS1S PM GROUP cannot be "/DS1SGDF".

If DS1S PM GROUP is entered on this form, then it must be entered in the PM GROUP field on the DNUPM form with a PM TYPE of "DS1S".

No more than 50 unique PM GROUP names are allowed per SM from the combination of PM GROUPs defined on EQSTE forms as STE PM GROUP, and defined on EQVT forms as VT PM GROUP and DS1S PM GROUP.

2.17 DS1S FACILITY ID

Description: Enter the DS1S FACILITY ID used to identify the digital signal level 1 SONET facility.
Valid Entries: 1 - 25 characters

2.18 APPLICATION TYPE

Description: This field supports multiple applications of a DS1 on the DNU-S. Enter the Application Type.

This field supports the TR303 on DNU-S feature. See Division 2, Section 9J.

Software Release: 5E12 and later.
Required Field.
Valid Entries:

Valid APPLICATION TYPE Entries

Entry	Definition
AIUC	Extended Access Interface Unit Control.
AIUD	Extended Access Interface Unit Data.
IWU	Inter-Working Unit. Supports the 99-5E-7880 feature in a 5E16 Feature Release.
IWG	Inter-Working Gateway. Supports the 99-5E-8010 feature in a 5E15 Feature Release.
RSM	5E13 Software Update: Supports the 99-5E-4209 feature: SM and RSM via the DNU-S.
TRUNK	Digital trunk facility.
TR303	Control facility TR303 RDT (Remote Digital Terminal).
[TR303C]TRL	Data facility TR303 RDT.

Data Rules:

When "TR303" or "TR303CTRL" is entered, FRAME must be "ESF" and ZCS must be "N".

When "AIUC" or "AIUD" is entered, FRAME must be "ESF" and ZCS must be "N".

When "RSM" is entered,

VT MODE must be "DMI"

FRAME must be "ESF"

ZCS must be "N" .

NOTE: When "RSM" is not entered, VT MODE must be "RB".

DS1 SIGNALING (DS1S)

The following fields (Section 2.19 - Section 2.20) define the Level 1 SONET Facility signaling attributes. The table below provides the relationship of line coding and framing formats between the DFI and the DNU-S VT1.5. It shows the effect of these codings to the HDLC (High Level Data Link Control) format of the D-channel. The DNU-S VT1.5 equivalent to the DLTU DFI MODE is a combination of the ZCS field of the VT1.5, the DNU-S DS1 Frame, and the D-channel DATA RATE field on the TKGRP form (5202 Record). The first three columns of the table are related to the DNU-S VT1.5.

Line Coding and Framing Formats for DFI and DNU-S VT1.5

DNU-S DS1S FRAME	DNU-S DS1S ZCS	DATA RATE	DFI MODE	LINE CODING	FRAMING FORMAT	HDLC ENCODING
SF	Y	56K	D4	ZCS	SF/D4	Inverted.
ESF	Y	56K	FEB7	ZCS	ESF	Inverted.
SF	Y	R64K	D464	ZCS	SF/D4	Inverted.
ESF	Y	R64K	FE64	ZCS	ESF	Inverted.
SF	N	64K	64K	B8ZS	SF/D4	Noninverted.
ESF	N	64K	FE8Z	B8ZS	ESF	Noninverted.

2.19 # FRAME

Description: Enter the type of framing for the DS1 SONET facility signaling.

Required Field.

Valid FRAME Entries

Entry	Definition
ESF	Extended Super Frame.
SF	Super Frame.

2.20 ZCS

Description: Should zero code suppression be in effect on this DS1S?

Required Field.
Default: N
Valid Entries: Y, N

Data Rules:

For 5E10 and later, when TGN/MEMBs defined on the TRUNK form have NEN entered, and have a TRKCLS of "EDSL" and DATA RATE of 64K on the associated TKGRP form, ZCS on the associated EQVT form must be "N".

For 5E10 and later, when TGN/MEMBs defined on a TRUNK form have an entry for NEN, where the corresponding TKGRP form has WB RATE entered there must be a matching EQVT form where FRAME is "ESF" and ZCS is "N".

WIRELESS TRUNKS

2.21 AFAC ID

Description: Enter the Autoplex Facility Identifier. This feature was added for the Wireless Trunks on DNU-S feature. See Division 2, Section 8L.

Software Release: 5E13 and later
Valid Entries:

For 5E13 and earlier: 1 - 1023

For 5E14: 1 - 4080

For 5E15 and later: 1 - 4500

Data Rules:

For 5E13 and later:

When AFAC ID is entered, APPLICATION TYPE must be "TRUNK".

AFAC IDs must be unique across EQDUP and EQVT forms in an office.

An EQDSC3 form (5852 Record) must exist with the EQSTAT attribute set to "O" for the associated SM.

AFAC ID must not be entered on EQDUP or EQVT forms under the following TKGRP form conditions:

— DCS TRK is "N",

— TRKCLS is not equal to "BCM" or "PPMEM", and

— TRK DIR is not "SGNL".

APT TESTING

This field supports the APT (Automatic Progression Testing) Enhancements feature. For information on this feature see, Division 2, Section 2AD.

2.22 ALGORITHM

Description: This field is used for the DS1 (Digital Signal Level 1) in APT (Automatic Progression Testing).

Software Release: 5E16(2) and later
Valid Entries:

Valid ALGORITHM Entries

Entry	Definition
1ONLY	Test One Only (test one trunk only on the DS1, independently whether test passes or fails and then move to a trunk on another DS1).
FULL	Full (test all trunks on the DS1, independently whether test passes or fails, and then move to a trunk on another DS1).
NOTST	No Test (APT should not perform any tests on the DS1).
SUCC	Stop on Success (test one trunk on the DS1 and then move to a trunk on another DS1 if test passes, or test next trunk on the same DS1 if test fails).

Data Rules:

ALGORITHM can only be entered when APPLICATION TYPE is "TRUNK".

Copyright © 2006 Lucent Technologies

```
eqvt                              5ESS Switch
SCREEN 1 OF 2             OFFICE DATA ADMINISTRATION
(5858)     DIGITAL NETWORKING UNIT SONET VIRTUAL TRIBUTARY (SM2000)

*1. SM         ___      9. VT PM GROUP VT1DEF
*2. DNUS       _           VT TYPE     ASYNC
*3. DATA GROUP _       11. VT MODE     RB
*4. STE        _           VT SIZE     1.5
*5. STS        1
*6. VT GROUP   _       13. DS1S EQSTAT      O
*7. VT MEMBER  _       14. DS1S PM GROUP    DS1SDEF
 8. VT EQSTAT  O       15. DS1S FACILITY ID ___________________________
                      #16. APPLICATION TYPE __________
```

```
eqvt                              5ESS Switch            _
SCREEN 2 OF 2             OFFICE DATA ADMINISTRATION
(5858)     DIGITAL NETWORKING UNIT SONET VIRTUAL TRIBUTARY (SM2000)

DS1 SIGNALING (DS1S)
#17. FRAME ___
 18. ZCS   N

 WIRELESS TRUNKS
 19. AFAC ID ____
```

Figure 1 SAMPLE EQVT FORM 5E13 THROUGH 5E15 SOFTWARE RELEASES

```
eqvt                              5ESS Switch
SCREEN 1 OF 2             OFFICE DATA ADMINISTRATION
(5858)     DIGITAL NETWORKING UNIT SONET VIRTUAL TRIBUTARY (SM2000)

*1. SM         ___      9. VT PM GROUP VT1DEF
*2. DNUS       _       10. VT TYPE     ASYNC
*3. DATA GROUP _       11. VT MODE     RB
*4. STE        _           VT SIZE     1.5
*5. STS        1
*6. VT GROUP   _       13. DS1S EQSTAT      O
*7. VT MEMBER  _       14. DS1S PM GROUP    DS1SDEF
 8. VT EQSTAT  O       15. DS1S FACILITY ID ___________________________
                      #16. APPLICATION TYPE __________
```

```
eqvt                              5ESS Switch            _
SCREEN 2 OF 2             OFFICE DATA ADMINISTRATION
(5858)     DIGITAL NETWORKING UNIT SONET VIRTUAL TRIBUTARY (SM2000)

DS1 SIGNALING (DS1S)
```

```
#17. FRAME ___
 18. ZCS   N

 WIRELESS TRUNKS
 19. AFAC ID ____

     APT TESTING
 20. ALGORITHM _____
```

Figure 2 SAMPLE EQVT FORM 5E16 AND LATER SOFTWARE RELEASES

Copyright © 2006 Lucent Technologies

SEC. 61: 5859 RECORD
EQUIPMENT SUBUNIT — SAS MEMORY PACK - EQSASP

1. GENERAL

The 5859 Record is available with 5E9(2) and later Software Releases. This record defines the equipage information for the SAS (Service Announcement System) memory packs and the cards within the memory pack.

1.1 Recent Change View

The corresponding Recent Change View for this form is 20.26

2. FORM AND RECORD ENTRIES

2.1 BASE AND CONTROL, ESS UNIT

Enter the Base and Control Number and the Office Name on each record.

2.2 * SM

Description: Enter the switching module number.

Required Field.
Valid Entries: 1 - 192

Data Rules:

Every entry on this form must have a corresponding entry on the EQRA form where UNIT TYPE is set to "SAS". The corresponding EQRA form is found by matching SM and UNIT NUMBER on the EQSASP form to the SWITCHING MODULE and UNIT NUMBER on the EQRA form.

2.3 * UNIT NUMBER

Description: Enter the service announcement system unit number.

Required Field.
Valid Entries: 0 - 7

2.4 * PACK NUMBER

Description: Enter the service announcement system pack position.

Required Field.
Valid Entries: 1 - 4

Data Rules:

The PACK NUMBER entries on the EQSASP forms that have the same SM and UNIT NUMBER must be sequential starting with one.

Whan PACK NUMBER is 1, then CLI must be 1.

Copyright © 2006 Lucent Technologies

2.5 # EQSTAT

Description: Enter the memory pack equipage state.

Required Field.

Valid EQSTAT Entries	
Entry	**Definition**
G	Growth
O	Operational
U	Unequipped

Data Rules:

The entry for EQSTAT must be less than or equal to the EQUIPMENT STATUS on the corresponding EQRA form: "O" is greater than "G" which is greater than "U". The corresponding EQRA form is found by matching SM and UNIT NUMBER on the EQSASP form to SWITCHING MODULE and UNIT NUMBER on the EQRA form.

2.6 CLI

Description: Enter the hexadecimal CLI (Change Level Indicator) for the service announcement system memory pack. See Division 8, Section 1 for CLI values.

Required Field.

Defaut Value: 00000000
Valid Entries: 00000000 - 7FFFFFFF (hexadecimal)

Data Rules:

When CLI is 1:

CARD 0 SIZE must be "FR64", "FR128", or "FR256".

CARD 1 SIZE thru CARD 7 SIZE must not be entered.

SIZE must not be "FR128" or "FR256".

CARDS EQUIP is 1.

When CLI is entered on this form, this CLI value must match the CLI value on the EQRA form (5821 Record).

2.7 APPLICATION

Description: Enter the application name for service announcement system.
Valid Entries: 1 - 8 of the following characters:

- (2, A-Z, - or _)

Data Rules:

APPLICATION must be specified when defining a memory flash card.

If APPLICATION is entered, then CARDS EQUIP must be greater then 0.

Copyright © 2006 Lucent Technologies

2.8 CARDS EQUIP

Description: Enter the number of SAS memory flash cards equipped.

Required Field.
Default: 0
Valid Entries: 0 - 8

Data Rules:

The sum of the number of entries in MEMORY CARD LIST must equal the entry in this field.

If CARDS EQUIP is entered, then APPLICATION must be entered.

MEMORY CARD LIST (MCL)

The following fields (Section 2.9 - Section 2.10) define the list of memory flash card densities and version numbers.

2.9 SIZE

Description: Enter the Card size specifying the memory flash card density.

Valid SIZE Entries

Entry	Definition
FR1 - FR64	Densities for Flash RAM
SR1 - SR64 and SR512	Densities for Static RAM

Data Rules:

If SIZE is entered, then CODE must also be entered. If SIZE is not entered, then CODE cannot be entered.

2.10 CODE

Description: Enter the card code specifying the memory flash card version number.
Valid Entries: 9 digits

Data Rules:

Each CODE entry in MEMORY CARD LIST must be unique.

```
eqsasp                              5ESS Switch          _
(5859)                       OFFICE DATA ADMINISTRATION
                        EQUIPMENT SUBUNIT -- SAS MEMORY PACK

*1. SM           ___                     8. MEMORY CARD LIST (MCL)
*2. UNIT NUMBER  _
*3. PACK NUMBER  _                       ROW CARD SIZE     CODE
#4. EQSTAT       _                        1   0   ______  __________
 5. CLI          00000000                 2   1   ______  __________
 6. APPLICATION  ________                 3   2   ______  __________
 7. CARDS EQUIP  _                        4   3   ______  __________
```

Copyright © 2006 Lucent Technologies

5	4	_____	_____
6	5	_____	_____
7	6	_____	_____
8	7	_____	_____

Figure 1 SAMPLE EQSASP FORM 5E9(2) AND LATER SOFTWARE RELEASES

Copyright © 2006 Lucent Technologies

SEC. 62: 5743 RECORD
ECHO CANCELER UNIT EQUIPAGE - EQECSU

1. GENERAL

The 5743 Record is available with the 5E10 Software Release. It is used to define the characteristics of an Echo Canceler Unit. This form supports Echo Canceler Units for the CDMA (Code Division Multiple Access) feature. For more information on this feature, see Division 2, Section 8B.

1.1 Recent Change View

The corresponding Recent Change View for this form is 19.15

2. FORM AND RECORD ENTRIES

2.1 BASE AND CONTROL, ESS UNIT

Enter the Base and Control Number and the Office Name on each record.

2.2 * SM

Description: Enter the Switching Module number.

Required Field.
Valid Entries: 1 - 192

Data Rules:

The SM must be defined on an EQIM form.

If EQDUP forms have Echo Cancelers defined, then a corresponding EQECSU form must exist with the same SM entry and unit number.

2.3 * ECSU

Description: Enter the Echo Canceler Unit number.

Required Field.
Valid Entries: 0 - 5

Data Rules:

If this form is entered, a corresponding EQDUP form must exist having the same unit number as the entry in this field and the same SM number.

2.4 # EQLAISLE

Description: Enter the Equipment location (floor and aisle) number. This entry consists of a floor and aisle number. The first and second digits, from the left, are the floor number. Valid floor numbers are 00-99. The third and fourth digits, from the left, are the aisle number. Valid aisle numbers are 00-99. It is recommended that floor 00 be used for equipment located in the basement per floor plan designation.

Required Field.

Copyright © 2006 Lucent Technologies

Valid Entries: 0000 - 9999

2.5 # EQLBAY

Description: Enter the equipment location bay number

Required Field.
Valid Entries:
For SM: 0 - 4
For SM-2000: 0 - 215

Data Rules:

The Equipment Bay and Vertical Position values must be unique within an SM. More than one Unit cannot be assigned the same equipment bay and vertical position within the same Switching Module.

2.6 # EQLUNVER

Description: Enter the equipment location unit vertical position number of the unit (circuit pack).

Required Field.
Valid Entries: 00 to 84

```
eqecsu                          5ESS Switch            _
                         OFFICE DATA ADMINISTRATION
(5743)                  ECHO CANCELER UNIT EQUIPAGE

*1. SM       ___
*2. ECSU     _
#3. EQLAISLE ____
#4. EQLBAY   ___
#5. EQLUNVER __
```

Figure 1 SAMPLE EQECSU FORM 5E10 AND LATER SOFTWARE RELEASES

Copyright © 2006 Lucent Technologies

SEC. 63: 5860 RECORD
GLOBAL DIGITAL SERVICE CIRCUIT 3 - EQGDSC3

1. GENERAL

The 5860 Record (Global Digital Service Circuit 3) is available with the 5E10 and later Software Releases. It is used to define the GDSF (Global Digital Service Function) on the DSU3 for the SM and the SM-2000 class processor. There is a maximum of 1 DSU3 per SM and 2 per SM-2000 class processor. The GDSF includes the following services:

- Conference Circuits (3 and 6 Ports)
- Tone Generators
- Tone Transceivers
- Guard-Data-Guard Transceivers
- ISTF Loop Back
- ISTF Transmitter

See Figure 1. for GDSF service configurations by equipment type.

Each DSC3 has four duplex PIDBs (Peripheral Interface Data Buses) for a total of 128 time slots of data and one duplex PICB (Peripheral Interface Control Buses) for control. This provides four times the number of time slots that the DSC2 supports. The DSC3 connects (via PIDBs/PICBs) to the TSI (Time Slot Interchanger) and the SMP (Switching Module Processor) via the DX (Data EXpander) and CI (Control Interface) links, respectively.

For an SM-2000 class processor, UNIT TYPE on the EQIM form (5700 Record) must be set to an SM-2000 class processor. PACK NUMBER values for each combination of SM and DSU must be entered in sequential order for SM-2000 (i.e., PACK NUMBER 1 cannot be entered for an SM and DSU until PACK NUMBER 0 is entered for the same SM and DSU).

For 5E11 and later, RSMs (Remote Switching Modules) may only have ISTF loopback and ISTF transmit circuit assignments via a EQGDSC3 form. Valid RSM EQGDSC3 assignments are provided in the following table:

Valid RSM ISTF/ISTF Entries

SM TYPE	CONFIGURATION	# of 3 PORTS	# of 6 PORTS
SM-2000	4 or 7	0	0
non-SM-2000	4 or 6	0	0

The SM-2005 unit can accommodate up to 6 LDSC3/GDSC3 boards.

See Division 2, Section 7G for more information on the GDSF. This form is also used to define the GDSF on a CSU (Combined Services Unit). See Division 2, Section 7F.

1.1 Recent Change View

The Recent Change View for this form is 19.19.

2. FORM AND RECORD ENTRIES

Copyright © 2006 Lucent Technologies

2.1 BASE AND CONTROL, ESS UNIT

Enter the Base and Control Number and Office Name on each record.

2.2 *SM

Description: Enter the Switching Module number.

Required Field.
Valid Entries: 1 - 192

2.3 *GDSF PACK NUM

Description: Enter the GDSF Pack Number.

Required Field.

Valid GDSF PACK NUM Entries

Entry	Description
0	SM.
0 - 31	SM-2000.

Data Rules:

The values of GDSF PACK NUM must be sequential per SM, beginning with 0.

When UNIT TYPE on the EQIM form is not an SM-2000 class processor, GDSF PACK NUM must be 0.

For SM-2000 class processors, all four PIDB LIST PIDB values must be entered. For non-SM-2000 class processors, no more than two PIDB LIST PIDB values are allowed.

2.4 #UNIT OFFSET

Description: Enter the Unit Offset number.

Required Field.
Valid Entries:
5E10 and earlier: 13 for SM; 0-17 for an SM-2000 class processor

5E11 and later: 13 for SM; 0-23 for an SM-2000 class processor

Data Rules:

UNIT OFFSET and PICB must both be even, or both be odd.

UNIT OFFSET values must not be duplicated on another EQGDSC3 form defined for the same DSU3 and SM.

When UNIT TYPE on the EQIM form is not an SM-2000 class processor, UNIT OFFSET must be 13.

UNIT OFFSET must not be 10 or 19. These positions are exclusively for LDSC3 packs.

When UNIT OFFSET is greater than 17, the BAY field must be "0" and VERTPOST must be 15.

Copyright © 2006 Lucent Technologies

2.5 EQSTAT

Description: Enter the status of the unit.

Required Field.

Default Value. O

Valid EQUIPMENT STATUS Entries

Entry	Definition
O	Operational.
G	Growth.
U	Unequipped.

Data Rules:

For initial offices, EQSTAT must be "O".

If EQSTAT is not "O", NUM OF 3 PORTS, NUM OF 6 PORTS, and CONFIGURATION must be 0 or blank.

2.6 #CLI

Description: Enter the Change Level Indicator value. Refer to Division 8, Section 1 for the appropriate CLI value.

Required Field.

Default: 0
Valid Entries: 0 - 7fffffff (hex)

Data Rules:

When UNIT TYPE on the EQIM form is not an SM-2000 class processor, CLI must be 0.

For 5E16(2) FR 1 and later, when GDSF2 is equipped with UN363 packs, CLI must be 0, and with UN590 packs, the CLI must be 1.

2.7 #AISLE

Description: Enter the aisle (and floor) where the DSU3 is located. The floor is designated 00 - 99 and the aisle is designated 00 - 99.

Required Field.
Valid Entries: 00 - 99

2.8 #BAY

Description: Enter the Bay number where the DSU3 is located.

Required Field.
Valid Entries: 0 - 208

Valid BAY Entries, 5E9(2) - 5E16(1)

Entry	Definition
0 - 4	SM.
0 - 14	SM-2000 class processor; SM Cabinet aisle.
100 - 104	SM-2000 class processor; Back panel; wiring position.

Copyright © 2006 Lucent Technologies

200 - 208	SM-2000 class processor; Front panel; door position.

Valid BAY Entries for 5E16(2) and later			
Entry			Type
000 - 004			SM
000 - 014,	100 - 104,	200 - 208,	SM-2000
A00 - A14,	B00 - B04,	C00 - C08,	
D00 - D14,	E00 - E04,	F00 - F08,	
G00 - G14,	H00 - H04,	J00 - J08,	
K00 - K14,	L00 - L04,	M00 - M08,	
N00 - N14,	P00 - P04,	Q00 - Q08,	
R00 - R14,	S00 - S04,	T00 - T08,	
U00 - U14,	V00 - V04,	W00 - W08,	
X00 - X14,	Y00 - Y04,	Z00 - Z08	

2.9 #VERTPOS

Description: Enter the Vertical Position where the DSU3 is located. Recommended positions are as follows:

For 7-foot cabinets: 22, 30, 39, 48, 56, 65, 74

- For 6-foot cabinets: 7, 15, 24, 32, 41, 49, 58

Required Field.
Valid Entries: 00 - 84

2.10 CSU

Description: Is the GDSF located on a CSU (Combined Services Unit)? For more information on the Combined Services Unit feature, see Division 2, Section 7F.

Required Field.
Default: N
Valid Entries: Y, N

Data Rules:

For 5E10 and earlier, when CSU is "Y":

- UNIT OFFSET must be 13.
- no other EQGDSC3 form may be entered on the same SM that also has CSU of "Y".
- UNIT TYPE on the EQIM form must not be "SM2000"
- no other EQGDSC3 form may be entered on the same SM that also has CSU set to "Y".

When CSU is set to "N", the corresponding SM must have a UNIT TYPE with an SM-2000 class processor.

For 5E11 and later, for a Wireless Centrex Application:

- GDSF PACK NUM must be 0 or 1,
- CSU must be "Y".

Copyright © 2006 Lucent Technologies

For 5E11 and later, for a non-Wireless Centrex Application:

- GDSF PACK NUM must be 0 or 1,
- CSU must be "Y",
- UNIT OFFSET must be 13.

NOTE: A Wireless Centrex Application is indicated by PRODUCT set to "WNC" on the OFCOPT form (5509 Record).

2.11 #CONFIGURATION

Description: Enter the configuration of the GDSF Pack.

Required Field.
Valid Entries: 0 - 8

Data Rules:

If CONFIGURATION is 2, 4, or 5, the number of CONFERENCE circuits must be 0 or blank.

2.12 NUM OF 3 PORT

Description: Enter the quantity of 3 Ports required. Note that each 3 Port (time slots in clusters of three) is equal to three conference circuits. An entry of 1 provides 3 conference circuits; an entry of 2 provides six conference circuits, etc.

Required Field.
Valid Entries: blank, 0 - 42

2.13 NUM OF 6 PORT

Description: Enter the quantity of 6 Ports required. Note that each 6 Port (time slots in clusters of six) is equal to 6 conference circuits. For example, an entry of 1 provides 6 conference circuits; an entry of 2 provides 12 conference circuits, etc.

Required Field.
Valid Entries: blank, 0 - 21

2.14 INTF UNIT

Description: Enter the Interface Unit number. This field was added to support the 5E15 Optically Extended Control and Data Unit feature. See Division 2, Section 9V.

Required Field.
Valid Entries: 0 - 8

Data Rules:

When INTF UNIT is greater than 0, it must be defined on the EQXCDU form for the same Switching Module. In addition, the EQSTAT value on the EQCI must not exceed the MOD CTL SG0/1 EQSTAT on the EQXCDU

Copyright © 2006 Lucent Technologies

form (5853 Record). (EQSTAT of "O" is greater than EQSTAT of "G", and EQSTAT of "G" is greater than EQSTAT of "U".)

The SM/INTF UNIT/DATA GRP combinations entered on this form must be defined on a EQDI form or a EQXCDU form. Also, the EQSTAT on the matching EQDI or EQXCDU form must be greater than or equal to the equipment status value ("O", "G", or "U") on this form (e.g., "O" is greater than "G" which is greater than "U"). Note also that when INTF UNIT is greater than 0 and DATA GRP is 0, these Data Groups are defined on the EQXCDU form.

For 5E16(2) and later, when INTF UNIT is 0, BAY must be 000 - 014, 100 - 104, or 200 - 208.

2.15 #CI

Description: Enter the Control Interface group number.

Required Field.

Valid CI Entries	
Entry	**Description**
0 - 1	SM.
0 - 3	SM-2000 class processor.

Data Rules:
The value of the CI/PICB fields must not be 0/0 or 0/1. These values are reserved for the LDSU on non-SM2000 class processors.

CI (CONTROL GROUP) numbers assigned on the following forms must be defined as CI on an EQCI form: EQDCTU (5751 Record), EQDCLU (5810 Record), EQDS (5740 Record), EQDSC3 (5852 Record), EQDUP (5730-2), EQGDSC3 (5860 Record), EQIDCU (5846 Record), EQISLU (5731 Record), EQISTF (5823 Record), EQLU (5710 Record), EQPSU (5741 Record), EQRA (5821 Record), EQTU (5720 Record), EQFIU (5753 Record), EQMSU (5750 Record), EQRCLK (5723 Record). Furthermore, the EQSTAT on the matching EQCI form must be greater than or equal to the equipment status value on the equipment form (i.e., "O" is greater than "G" which is greater than "U").

2.16 #PICB

Description: Enter the Peripheral Interface Control Bus number.

Required Field.
Valid Entries: 0 - 22

Data Rules:

PICB and UNIT OFFSET must both be even, or both be odd.

2.17 #DI

Description: Enter the Data Interface number.

Required Field.
Valid Entries:
- 0 - 1 for SM
- 0 - 5 for an SM-2000 class processor

Copyright © 2006 Lucent Technologies

Data Rules:

The following forms cannot have a duplicate Data Port assignment on the same Switching Module: EQDCLU (5810 Record), EQDS (5740 Record), EQDSC3 (5852 Record), EQDUP (5730-2), EQGDSC3 (5860 Record), EQIDCU (5846 Record), EQISLU (5731 Record), EQISTF (5823 Record), EQLU (5710 Record), EQPSU (5741 Record), EQRA (5821 Record), EQTU (5720 Record).

PIDB LIST

This field group defines the PIDB numbers for rows 1 - 4. Each PIDB row must be unique.

2.18 #PIDB

Description: Enter the PIDB for rows 1 - 4.

Required Field.
Valid Entries:
0 - 15 for SM
0 - 23 for an SM-2000 class processor

Data Rules:

At least one PIDB must be entered.

When only 1 PIDB is equipped and CONFIGURATION is 1, the number of Conference Circuits cannot exceed 32 (see Note below).

When only 1 PIDB is equipped and CONFIGURATION is 2, 4, or 5, the number of Conference Circuits must be 0 or blank.

When only 1 PIDB is equipped and CONFIGURATION is 6 or 7, the number of Conference Circuits cannot exceed 24 (see Note below).

When only 1 PIDB is equipped and CONFIGURATION is 8, the number of Conference Circuits cannot exceed 12 (see Note below).

When only 1 or 2 PIDBs are equipped, CONFIGURATION must not be 3.

When only 2 PIDBs are equipped, and CONFIGURATION is 1, the number of Conference Circuits cannot exceed 64 (see Note below).

When only 2 PIDBs are equipped, and CONFIGURATION is 6 or 8, the number of Conference Circuits cannot exceed 30 (see Note below).

When only 2 PIDBs are equipped, and CONFIGURATION is 7, the number of Conference Circuits cannot exceed 48 (see Note below).

When 4 PIDBs are equipped, and CONFIGURATION is 1, the number of Conference Circuits cannot exceed 128 (see Note below).

When 4 PIDBs are equipped, and CONFIGURATION is 2 or 5, the number of Conference Circuits cannot exceed 30 (see Note below).

Copyright © 2006 Lucent Technologies

When 4 PIDBs are equipped, and CONFIGURATION is 4 or 8, the number of Conference Circuits cannot exceed 60 (see Note below).

When 4 PIDBs are equipped, and CONFIGURATION is 7, the number of Conference Circuits must be 0.

When 4 PIDBs are equipped, CONFIGURATION must not be 3 or 6.

When 4 PIDBs are equipped and CONFIGURATION is 3, 4, 6, or 8, the number of conference circuits cannot exceed 24 (see Note below).

NOTE: The number of conference circuits is determined by the value entered in the NUM OF 3 PORT field x 3, plus the value entered in the NUM OF 6 PORT field x 6.

GLOBAL DIGITAL SERVICES FUNCTION SM-2000 CONFIGURATIONS - 4 PIDBs

Configuration Type	Tone Generators	Tone Transceivers	Guard-Data-Guard Transceivers	ISTF Transmitters	ISTF Loop Back	Conference Circuits	Comments
0	-	-	-	-	-	0	No conference circuits.
1	-	-	-	-	-	128	All conference circuits.
2	12	10	6	-	-	30	Existing Full SM TTF.
4	-	-	-	10	44	60	Only conference and ISTF circuits.
5	24	4	4	4	32	30	All functionality, with more TTF services.
7	-	-	-	16	32	-	All ISTF circuits.
8	16	12	4	-	-	60	Replaces the existing GDSU services.

GLOBAL DIGITAL SERVICES FUNCTION SM CONFIGURATIONS - 1 PIDB

Configuration Type	Tone Generators	Tone Transceivers	Guard-Data-Guard Transceivers	ISTF Transmitters	ISTF Loop Back	Conference Circuits	Comments
0	-	-	-	-	-	0	No conference circuits.
1	-	-	-	-	-	32	All conference circuits.
2	16	12	4	-	-	-	TTF/TTF2 more TTF.
4	-	-	-	4	28	-	ISTF replacement.
5	12	6	2	4	8	-	TTF/TTF2/ISTF.
6	-	-	-	6	2	24	Conference/ISTF.
7	4	3	1	-	-	24	Conference/TTF/TTF2.
8	6	4	2	4	4	12	All functions.

GLOBAL DIGITAL SERVICES FUNCTION SM CONFIGURATIONS - 2 PIDBs

Configuration Type	Tone Generators	Tone Transceivers	Guard-Data-Guard Transceivers	ISTF Transmitters	ISTF Loop Back	Conference Circuits	Comments
0	-	-	-	-	-	0	No conference circuits.
1	-	-	-	-	-	64	All conference circuits.
2	16	12	4	-	-	-	TTF.
4	-	-	-	8	56	-	ISTF replacement.
5	20	8	4	4	28	-	TTF/ISTF.

Copyright © 2006 Lucent Technologies

6	-	-	-	12	22	30	Conference/ISTF.
7	8	6	2	-	-	48	Conference/TTF/TTF2 .
8	6	4	4	4	16	30	All functions.

One or two PIDBs are allowed for SMs; 4 PIDBs are allowed for SM-2000.

ISTF = Integrated Services Test Facility TTF = Transmission Test Facility

Figure 1 GDSF CONFIGURATIONS

```
SCREEN 1 OF 1                    5ESS Switch            _
eqgdsc3                   OFFICE DATA ADMINISTRATION
(5860)                 GLOBAL DIGITAL SERVICE CIRCUIT 3

 *1. SM                ___                #13. CI        _
 *2. GDSF PACK NUM     __                 #14. PICB      __
 #3. UNIT OFFSET       __                 #15. DI        _
  4. EQSTAT            O
 #5. CLI               00000000           #16. PIDB LIST
 #6. AISLE             ____                 ROW  CKT    PIDB
 #7. BAY               ___                   1    0      __
 #8. VERTPOS           __                    2    1      __
  9. CSU               N                     3    2      __
#10. CONFIGURATION     _                     4    3      __
 11. NUM OF 3 PORT     __
 12. NUM OF 6 PORT     __
```

Figure 2 SAMPLE EQGDSC3 FORM 5E10 - 5E14 SOFTWARE RELEASES

```
eqgdsc3                           5ESS Switch            _
                          OFFICE DATA ADMINISTRATION
(5860)              GLOBAL DIGITAL SERVICE CIRCUIT 3 (SM2000)

 *1. SM             ___          13. INTF UNIT 0
 *2. GDSF PACK NUM __           #14. CI        _
 #3. UNIT OFFSET   __           #15. PICB      __
  4. EQSTAT        O            #16. DI        _
  5. CLI           00000000
 #6. AISLE         ____         17. PIDB LIST (PIDBLIST)
 #7. BAY           ___          ROW CKT PIDB
 #8. VERTPOS       __            1   0   __
  9. CSU           N             2   1   __
#10. CONFIGURATION _             3   2   __
#11. NUM OF 3 PORT __            4   3   __
#12. NUM OF 6 PORT __
```

Copyright © 2006 Lucent Technologies

Figure 3 SAMPLE EQGDSC3 FORM 5E15 AND LATER SOFTWARE RELEASES

SEC. 64: 5745-1/2 RECORD
ACCESS INTERFACE UNIT - EQAIU

1. GENERAL

The 5745 Record is available with the 5E11 Software Release. It is used to define the AIU (Access Interface Unit) (see Division 2, Section 7K). Effective with the 5E12 and later Software Releases, ISDN capability was added for the AIU (see Division 2, Section 9K). Additionally, for 5E12 and later, the Remote AIU feature is available (see Division 2, Section 9O). Effective with the 5E14 and later Software Releases, ADSL (Asymmetric Digital Subscriber Line) on the AIU and Broadband for the AIU are provided. These features are also available as 5E11, 5E12, and 5E13 Software Releases (see Division 2, Section 7AF). For 5E14 and later, the XAIU (MultipleXed Access Interface Unit) feature was implemented (See Division 2, Section 9T).

1.1 Recent Change View

The corresponding Recent Change View for this form is 19.16.

2. FORM AND RECORD ENTRIES

2.1 BASE AND CONTROL, ESS UNIT

Enter the Base and Control Number and the Office Name on each record.

2.2 * SM

Description: Enter the Switch Module identification number.

Required Field.
Valid Entries: 1 - 192

Data Rules:

For each SM assignment, there must be a corresponding EQIM form (5700 Record).

When an EQAIU form is assigned to an SM where the value of UNIT TYPE is not defined as an SM-2000 class processor on the corresponding EQIM form, the following conditions must be met:

- AIU must be less than 15
- EQL BAY must be 0 - 4
- CI must be 0 or 1
- RING GEN LOC must be less than 15
- The "DI" segment of the DI/DFPOS field must be 0 or 1 when PIDB TYPE is "AIU".

When an EQAIU form is assigned to a UNIT TYPE of "SM-2000", a maximum of 43 AIUs can be assigned.

For 5E14 and later:

For each SM assignment with AIU TYPE set to "XAIU", there must be a corresponding EQIM form (5700 Record) that must be an SM-2000 class processor.

Copyright © 2006 Lucent Technologies

For each SM assignment with AIU TYPE set to "XAIU", there must not be more than 31 XAIUs assigned.

2.3 * AIU

Description: Enter the Access Interface Unit identification number.

Required Field.

Valid AIU - 5E11 Entries

Entry	Description
0 - 14	SM.
0 - 42	SM-2000.

Valid AIU - 5E12 and later Entries

Entry	Description
0 - 14	SM.
0 - 127	SM-2000.

2.4 AIU TYPE

Description: This field was added to accommodate multiple AIU types. Enter the AIU TYPE.

Software Release: 5E12 and later
Required Field.
Default: AIU
Valid Entries:

Valid AIU TYPE Entries

Entry	Description
[A]IU	AIU feature.
[E]AIU	AIU Remote feature. Requires an SM-2000 class processor (when EQSTAT is set to either "O" or "G") defined on the EQIM form.
[X]AIU	Software Release: 5E14 and later Multiplexed AIU feature. Requires an SM-2000 class processor when AIUs are remotely used.

Data Rules:

If "AIU" is entered:

- COMDAC STATE, SITE ID, CBL SERIES and CBL DISTANCE must not be entered.
- CI and PICB must be entered.
- Row 1 of LOCAL TIME SLOT GROUP (PIDB) list must be entered.
- REMOTE COMDAC 0/1 TIME SLOT GROUP (TSPFAC0/TSPFAC1) list must not be entered.
- TEST PACK 0/1 must be "N"
- for every EQAIUP form, the EQAIUP EQSTAT must be less than the TIME SLOT GROUP (PIDB) (row 1) EQSTAT (EQSTAT state of "G" is less than the state of "O").
- COMDAC CLI must be 0 hexadecimal

For 5E14 and later:

Copyright © 2006 Lucent Technologies

row 1 of TIME SLOT GROUP must be unique within TIME SLOT GROUP (PIDB) list.

RCOMDAC0 EXT REF and RCOMDAC1 EXT REF must be "N".

and MTB0 is entered, row 1 PIDB.EQSTAT must be "G" or "O".

and MTB1 is entered, row 1 PIDB.EQSTAT must be "G" or "O".

For 5E15 and later:

INTF UNIT must be entered.

For 5E16(2) and later:

When AIU TYPE is "AIU" or "EAIU", CLI on the EQAIUP form must be 0.

If "EAIU" is entered:

- CI and PICB must not be entered.
- COMDAC STATE and SITE ID must be entered.
- LOCAL TIME SLOT GROUP (PIDB) list must not be entered.
- CBL DISTANCE and CBL SERIES must be entered.
- a RISITE form with the same SITE ID must be entered.
- and REMOTE COMDAC 0/1 TIME SLOT GROUP has a TRANSPORT TYPE of "DLTU", there must be an EQDUP form with a matching SM, DLTU, PK and FAC to define the transport DFI.
- COMDAC CLI must be 1 hexadecimal
- and REMOTE COMDAC 0/1 TIME SLOT GROUP has a TRANSPORT TYPE of "DNUS", there must be a matching EQVT form entered to define the transport DNU-S.
- and TSPFAC0 row 1 EQSTAT of "G" or "O", there must be an EQMH form defined with a matching SM number, or both MH SIDE 0 EQSTAT and MH SIDE 1 EQSTAT must be "O".
- and TSPFAC0/TSPFAC1 row 1 EQSTAT of "G" or "O" and/or the EQAIU forms with AIU TYPE of "XAIU" and XAIUTSGRP row 1 EQSTAT of "G" or "O", the maximum channel capacity defined on the EQMH form with a matching SM number is 31 channels.
- for every EQAIUP form, the EQAIUP EQSTAT must be less than the REMOTE COMDAC 0 TIME SLOT GROUP (TSPFAC0) row 1 EQSTAT on the AIU form (EQSTAT state of "G" is less than the state of "O").

For 5E13 and later:

NOTE: The SM, DLTU/DNUS, PK/DG, FAC/STE, STS, VTG and VTM on the EQAIU form match the SM, DNUS, DATA GROUP, STE, STS, VT GROUP and VT MEMBER on the EQVT form.

Copyright © 2006 Lucent Technologies

- REMOTE COMDAC 0 TIME SLOT GROUP (TSPFAC0) row 1 must point to a control DFI (on a EQDUP form) or DNU (on an EQVT form). If the COMDAC STATE is "DUPLEX", REMOTE COMDAC 1 TIME SLOT GROUP (TSPFAC1) row 1 must also point to a control DFI or DNU. (An EQDUP form will match SM, DLTU and DFI PACK NUMBER and will have FAC 0 or FAC 1 APPL set to "AIUC".) (An EQVT form will match SM, DNUS, DATA GROUP, STE, STS, VT GROUP and VT MEMBER and will have an APPLICATION TYPE of "AIUC".)
- REMOTE COMDAC 0 TIME SLOT GROUP (TSPFAC0) rows 2 - 6 (if equipped) must point to a data DFI (on a EQDUP form) or DNU (on an EQVT form). If the COMDAC STATE is "DUPLEX", REMOTE COMDAC 1 TIME SLOT GROUP (TSPFAC1) rows 2 - 6 (if equipped) must also point to a control DFI or DNU. (An EQDUP form will match SM, DLTU and DFI PACK NUMBER and will have FAC 0 or FAC 1 APPL set to "AIUD".) (An EQVT form will match SM, DNUS, DATA GROUP, STE, STS, VT GROUP and VT MEMBER and will have an APPLICATION TYPE of "AIUD".)
- REMOTE COMDAC 0 TIME SLOT GROUP (TSPFAC0) rows 1 - 6 (if equipped) entries must be unique. If the COMDAC STATE is "DUPLEX", REMOTE COMDAC 1 TIME SLOT GROUP (TSPFAC1) rows 1 - 6 (if equipped) must be unique. Entries must also be unique across REMOTE COMDAC 0 TIME SLOT GROUP (TSPFAC0) and REMOTE COMDAC 1 TIME SLOT GROUP (TSPFAC1) lists.
- When AIU TYPE is not "EAIU", REMOTE TIME SLOT GROUP (TSPFAC0 and TSPFAC1) lists must not be entered.

For 5E15 and later:

INTF UNIT must not be entered.

If "XAIU" is entered:

For 5E14 and later:

CI and PICB must not be entered.

COMDAC STATE, SITE ID, CBL SERIES and CBL DISTANCE must not be entered.

TEST TYPE 0 and TEST TYPE 1 must be "N".

RCOMDAC0 EXT REF and RCOMDAC1 EXT REF must be "N".

PDXU and SHELF must be entered.

EQSTAT in row 1 of TIME SLOT GROUP (XAIUTSGRP) list must be entered.

and SHELF equals 2 or 5, XAIU CONFIG must not be set to "HIGH".

and EQSTAT in row 1 of the TIME SLOT GROUP (XAIUTSGRP) is entered, there must be an EQPDXU form (5868 Record) with PCTDX0 and PCTDX1 EQSTAT equal to or greater than the EQAIU EQSTAT in row 1 of the TIME SLOT GROUP.

and XAIUTSGRP row 1's EQSTAT of "G" or "O" must have a matching SM number, or both MH SIDE 0 EQSTAT and MH SIDE 1 EQSTAT must not equal to "O".

with one or more entries in the XAIUTSGRP list where TSGRP NO is 2 - 5 and EQSTAT is "G" or O",

Copyright © 2006 Lucent Technologies

there must be a corresponding EQPDXU form with XAIU CONFIG set to "HIGH".

INTF UNIT must not be entered.

EQL BAY must not be "0".

COMDAC CLI must be 4 or 80000000 (for simulated circuits only)

When AIU TYPE is not "XAIU", PDXU, and SHELF must not be entered.

When AIU TYPE is not "XAIU", EQL BAY must not be 900 - 999.

5E16(2) and later:

When AIU TYPE is "XAIU" and TYPE on' the' EQAIUP form (5746 Record) is "AICLP", "AIULP", "AIURPLP", "AIZLP", or "AIGLP", the CLI on the EQAIUP form must be either 0 or 80000000 hexadecimal.

When AIU TYPE is "XAIU" and TYPE on the EQAIUP form is not "AICLP", "AIULP", "AIURPLP", "AIZLP", or "AIGLP", the CLI on the EQAIUP form must be 0.

2.5 BROADBAND

Description: Is the AIU unit Broadband capable? See Division 2, Section 7AF.

Software Release: 5E11 and later
Required Field.
Default: N
Valid Entries: Y, N

2.6 EMERG STAND ALONE

Description: Does the AIU have Emergency Stand Alone capability? See Division 2, Section 9AA.

Software Release: 5E15 FR 3
Required Field.
Default: N
Valid Entries: Y, N

Data Rules:

If "Y" is entered,

AIU TYPE must be "EAIU"

2.7 AIU SIZE

Description: This field was added for the AIU Remote feature. Enter the AIU SIZE. See Division 2, Section 90.

Software Release: 5E12 and later
Required Field.
Default: 600
Valid Entries:

Valid AIU SIZE Entries	
Entry	**Description**
500	Equipment size designation.
600	Equipment size designation (domestic).

Data Rules:

When "500" is entered, there is a maximum of 14 packs (EQAIUP forms) that can be equipped.

2.8 # EQL AISLE

Description: Enter both the equipment floor and aisle number.

Required Field.
Valid Entries: 0000 - 9999

2.9 # EQL BAY

Description: Enter the equipment location bay number.

Required Field.

Valid EQL BAY Entries, 5E9(2) - 5E16(1)	
Entry	**Definition**
0 - 4	Switching Module (non-SM-2000).
0 - 14	SM-2000; SM Cabinet aisle.
100 - 104	SM-2000; Back panel; wiring position.
200 - 208	SM-2000; Front panel; door position.

Valid EQL BAY Entries for 5E16(2) and later			
Entry			**Type**
000 - 004			SM
000 - 014,	100 - 104,	200 - 208,	SM-2000
A00 - A14,	B00 - B04,	C00 - C08,	
D00 - D14,	E00 - E04,	F00 - F08,	
G00 - G14,	H00 - H04,	J00 - J08,	
K00 - K14,	L00 - L04,	M00 - M08,	
N00 - N14,	P00 - P04,	Q00 - Q08,	
R00 - R14,	S00 - S04,	T00 - T08,	
U00 - U14,	V00 - V04,	W00 - W08,	
X00 - X14,	Y00 - Y04,	Z00 - Z08	

Valid Entries:

Data Rules:

When AIU TYPE is "AIU" and INTF UNIT is 0, EQL BAY must be 000 - 014, 100 - 104 , 200 - 208 or 900 - 999.

When AIU TYPE is "EAIU" or "XAIU", EQL BAY must be 000 - 014, 100 - 104, 200 - 208 or 900 - 999.

When INTF UNIT is greater than 0, the value in the PRIMARY UNIT field on the EQXCDU form (5832 Record) determines the allowed values for EQL BAY as indicated in the *Valid EQL BAY Entries for 5E16 and later* table displayed previously.

2.10 # EQL UNVER

Description: Enter the equipment location unit vertical position. Two AIUs can be identified as having identical

vertical positions, either front or back of a cabinet (on a given EQL AISLE/EQLBAY). However, greater than two AIUs with identical vertical positions is not allowed.

Required Field.
Valid Entries:
5E11: 0 - 84
5E12 and later: 15, 32, or 49

2.11 # CABINET

Description: Enter the location of the AIU unit within the cabinet.

Required Field.

Valid CABINET Entries

Entry	Description
[B]ack or R	Software Release 5E11 and earlier: Mounted in the wiring side of the cabinet.
[R]ear or R	Software Release 5E12 and later. Mounted in the wiring side of the cabinet.
[F]ront or F	Mounted in the equipment side of the cabinet.

2.12 EQSTATUS

Description: Enter the operational status of the equipment unit.

Software Release: 5E11 only
Required Field.
Default: O
Valid Entries:

Valid EQSTATUS Entries

Entry	Description
U	Unequipped.
G	Growth.
O	Operational.

2.13 CLI

Description: For 5E15 FR 3 and later, this field name was changed to COMDAC CLI to clearly identify that it is associated with the Common Data And Control circuit. See the COMDAC CLI field below for usage information.

2.14 COMDAC CLI

Description: Enter the Change Level Indicator for this AIU. Refer to Division 8, Section 1 for valid CLI values. This field name was changed to COMDAC CLI in 5E15 FR3.

Required Field.
Valid Entries: 0 - 80000000 hexadecimal

Data Rules:

Copyright © 2006 Lucent Technologies

For 5E11 and later, the COMDAC CLI value for the "AIU" is 00.
For 5E12 and later, the COMDAC CLI value for the "RAIU" is 01.
For 5E14 and later, the COMDAC CLI value for the "XAIU" is 04 or 80000000..
For 5E15 and later, the COMDAC CLI value for "EAIU" must be 01.

2.15 MTB0

Description: Enter the Metallic Test Bus - Service Group 0.

Required Field.
Valid Entries:
5E11: Enter the MTBO number as below.
5E12 and later: Blank, or enter the MTBO number as below.

METALLIC TEST BUS - 0			
Equipment		**Format**	**Valid Entries**
Switching Module	SM	XXX	1-192
Metallic Service Unit	MSU		0 - 1
Service Group	SVG	X	0 - 1
Board	BRD	XX	00 - 31
Bus	BUS	XX	00 - 14

Data Rules:

If MTB0 is entered, row 1 TSPFAC0.EQSTAT must be "G" or "O".

2.16 MTB1

Description: Enter the Metallic Test Bus - Service Group 1.

Required Field.

Valid Entries:
5E11: Enter the MTBO number as below.
5E12 and later: Blank, or enter the MTBO number as below.

METALLIC TEST BUS - 1			
Equipment		**Format**	**Valid Entries**
Switching Module	SM	XXX	1-192
Metallic Service Unit	MSU		0 - 1
Service Group	SVG	X	0 - 1
Board	BRD	XX	00 - 31
Bus	BUS	XX	00 - 14

Data Rules:

If MTB1 is entered, row 1 TSPFAC1.EQSTAT must be "G" or "O".

2.17 INTF UNIT

Description: Enter the Interface Unit number. This field was added to support the 5E15 Optically Extended Control and Data Unit feature. See Division 2, Section 9V.

Copyright © 2006 Lucent Technologies

Valid Entries: 0 - 8

Data Rules:

When INTF UNIT is greater than 0, it must be defined on the EQXCDU form (5832 Record) for the same Switching Module. In addition, the EQSTAT value on the EQCI form (5848 Record) must not exceed the MOD CTL SG0/1 EQSTAT on the EQXCDU form. (EQSTAT of "O" is greater than EQSTAT of "G", and EQSTAT of "G" is greater than EQSTAT of "U".)

The SM/INTF UNIT/DATA GRP combinations entered on this form must be defined on a EQDI form or a EQXCDU form. Also, the EQSTAT on the matching EQDI or EQXCDU form must be greater than or equal to the equipment status value ("O", "G", or "U") on this form (e.g., "O" is greater than "G" which is greater than "U"). Note also that when INTF UNIT is greater than 0 and DATA GRP is 0, these Data Groups are defined on the EQXCDU form.

When INTF UNIT is greater than 0, CI must not be 3.

For 5E16(2) and later, when INTF UNIT is 0, EQL BAY must be 000 - 014, 100 - 104, 200 - 208, or 900 - 999.

2.18 CI

Description: Enter the Control Interface number.

Required Field.
Valid Entries:
5E11: SM: 0 - 1
SM-2000 class processor: 0 - 3

5E12: Blank, or

SM: 0 - 1

SM-2000 class processor: 0 - 3

2.19 PICB

Description: Enter the Peripheral Interface Control Bus number.

Required Field.
Valid Entries:
5E11: 0 - 20 (even numbers)
5E12 and later: Blank, or 0 - 20 (even numbers)

RING GENERATOR

2.20 RING GEN LOC

Description: Enter the Ring Generator Location.

Required Field.
Valid Entries:
5E11: 0 - 42

Copyright © 2006 Lucent Technologies

5E12 and later: Blank, or 0 - 42

Data Rules:

A Ring Generator cannot be defined on more than 6 EQAIU forms (itself and 5 other AIUs).

A pair of Ring Generators can be used by more than one AIU; however, AIU RING GEN LOCs must be assigned to use their own ring generators before assigned to other AIUs. The value represented by RING GEN LOC must correspond to the AIU number on an EQAIU form (the host AIU) with either RING GEN LOC equal to the AIU on that form or where RING GEN LOC is unknown.

For 5E11 only, If a RING GEN LOC is specified on the EQAIU form, a EQAIUP form must be found for the same SM with its AIU value the same as RING GEN LOC, and APPL PACK NUM must be 17 or 19, and EQSTAT must be "G" or "O", and TYPE must be equal to "AIRG".

2.21 EXT RG0 EQSTAT

Description: Enter the equipment status of Ring Generator 0.

Software Release: 5E12 and later
Required Field.
Valid Entries: Blank, or as indicated in table below:

Valid EXT RG0 EQSTAT Entries

Entry	Description
U	Unequipped.
G	Growth.
O	Operational.

Data Rules:

If entered, RING GEN LOC must be known and RING GEN LOC must be the same as AIU unit number.

There can only be one RING GEN 0 assigned.

If EXT RG0 EQSTAT is entered, RING GEN LOC must be the same as AIU unit number.

2.22 EXT RG1 EQSTAT

Description: Enter the equipment status of Ring Generator 1.

Software Release: 5E12 and later
Required Field.
Valid Entries:

Valid EXT RG1 EQSTAT Entries

Entry	Description
U	Unequipped.
G	Growth.
O	Operational.

Data Rules:

If entered, RING GEN LOC must be known and RING GEN LOC must be the same as AIU unit number.

There can only be one RING GEN 1 assigned.

Copyright © 2006 Lucent Technologies

If EXT RG1 EQSTAT is entered, RING GEN LOC must be the same as AIU unit number.

REMOTE COMDAC

2.23 COMDAC STATE

Description: Enter the state of the remote common data control.

Software Release: Required Field.
Valid Entries: [S]IMPLEX or [D]UPLEX

Data Rules:

If "SIMPLEX" is entered, REMOTE COMDAC 0 TIME SLOT GROUP (TSPFAC0) row 1 must be entered.

If "SIMPLEX" is entered, REMOTE COMDAC 1 TIME SLOT GROUP (TSPFAC1) list must not be entered.

If "SIMPLEX" is entered, MTB1 must not be entered.

If "DUPLEX" is entered, REMOTE COMDAC 0 TIME SLOT GROUP (TSPFAC0) row 1 must be entered.

If "DUPLEX" is entered, REMOTE COMDAC 1 TIME SLOT GROUP (TSPFAC1) row 1 must be entered.

If "DUPLEX" is entered for a given row, TSPFAC0.EQSTAT must be the same as TSPFAC1.EQSTAT for that row.

If "DUPLEX" is entered for a given row, TSPFAC1.EQSTAT must be the same as TSPFAC0.EQSTAT for that row.

If "DUPLEX" is entered, both TSPFAC0 and TSPFAC1 lists must have equal number of rows defined.

For 5E14 and later:

When COMDAC STATE is "DUPLEX" and row 1 of TSPFAC1.EQSTAT is set to "O", TSPFAC0.EQSTAT in row 1 must be "O".

When COMDAC STATE is "DUPLEX" and row 1 of TSPFAC1.EQSTAT is set to "G", TSPFAC0.EQSTAT in row 1 must be "G" or "O".

When COMDAC STATE is "DUPLEX" and row 2 of TSPFAC1.EQSTAT is set to "O", TSPFAC0.EQSTAT in row 2 must be "O".

When COMDAC STATE is "DUPLEX" and row 2 of TSPFAC1.EQSTAT is set to "G", TSPFAC0.EQSTAT in row 2 must be "G" or "O".

When COMDAC STATE is "DUPLEX" and row 2 of TSPFAC1.EQSTAT is set to "U", TSPFAC0.EQSTAT in row 2 must be entered.

When COMDAC STATE is "DUPLEX" and row 2 of TSPFAC1.EQSTAT is not entered, TSPFAC0.EQSTAT in row 2 must not be entered.

When COMDAC STATE is "DUPLEX" and row 3 of TSPFAC1.EQSTAT is set to "O", TSPFAC0.EQSTAT in row 3 must be "O".

Copyright © 2006 Lucent Technologies

When COMDAC STATE is "DUPLEX" and row 3 of TSPFAC1.EQSTAT is set to "G", TSPFAC0.EQSTAT in row 3 must be "G" or "O".

When COMDAC STATE is "DUPLEX" and row 3 of TSPFAC1.EQSTAT is set to "U", TSPFAC0.EQSTAT in row 3 must be entered.

When COMDAC STATE is "DUPLEX" and row 3 of TSPFAC1.EQSTAT is not entered, TSPFAC0.EQSTAT in row 3 must not be entered.

When COMDAC STATE is "DUPLEX" and row 4 of TSPFAC1.EQSTAT is set to "O", TSPFAC0.EQSTAT in row 4 must be "O".

When COMDAC STATE is "DUPLEX" and row 4 of TSPFAC1.EQSTAT is set to "G", TSPFAC0.EQSTAT in row 4 must be "G" or "O".

When COMDAC STATE is "DUPLEX" and row 4 of TSPFAC1.EQSTAT is set to "U", TSPFAC0.EQSTAT in row 4 must be entered.

When COMDAC STATE is "DUPLEX" and row 4 of TSPFAC1.EQSTAT is not entered, TSPFAC0.EQSTAT in row 4 must not be entered.

When COMDAC STATE is "DUPLEX" and row 5 of TSPFAC1.EQSTAT is set to "O", TSPFAC0.EQSTAT in row 5 must be "O".

When COMDAC STATE is "DUPLEX" and row 5 of TSPFAC1.EQSTAT is set to "G", TSPFAC0.EQSTAT in row 5 must be"G" or "O".

When COMDAC STATE is "DUPLEX" and row 5 of TSPFAC1.EQSTAT is set to "U", TSPFAC0.EQSTAT in row 5 must be entered.

When COMDAC STATE is "DUPLEX" and row 5 of TSPFAC1.EQSTAT is not entered, TSPFAC0.EQSTAT in row 5 must not be entered.

When COMDAC STATE is "DUPLEX" and row 6 of TSPFAC1.EQSTAT is set to "O", TSPFAC0.EQSTAT in row 6 must be "O".

When COMDAC STATE is "DUPLEX" and row 6 of TSPFAC1.EQSTAT is set to "G", TSPFAC0.EQSTAT in row 6 must be "G" or "O".

When COMDAC STATE is "DUPLEX" and row 6 of TSPFAC1.EQSTAT is set to "U", TSPFAC0.EQSTAT in row 6 must be entered.

When COMDAC STATE is "DUPLEX" and row 6 of TSPFAC1.EQSTAT is not entered, TSPFAC0.EQSTAT in row 6 must not be entered.

2.24 RCOMDAC0 EXT REF

Description: Is the remote comdac 0 receiving external clock references?

Software Release: 5E12 and later
Required Field.
Default: N
Valid Entries: Y, N

2.25 RCOMDAC1 EXT REF

Description: Is the remote comdac 1 receiving external clock references?

Software Release: 5E12 and later
Required Field.
Default:
Valid Entries: Y, N

2.26 SITE ID

Description: Enter the EAIU site identification.

Software Release: 5E12 and later
Valid Entries: Blank, or 500 - 999

Data Rules:

For 5E12 and later, within the indicated SITE ID, there cannot be both a MTB and an External AIU Test Pack. For each site, if at least one EQAIUP form has TYPE set to "AIUTSTP", no EQAIU forms can have a TEST TYPE 0 or 1 set to "M". Further, duplicate testing equipment assignments are not alowed at the same site.

2.27 CBL SERIES

Description: Enter the type of cable series used to connect the backplane to the DSX.

Software Release: 5E12 and later
Required Field.
Valid Entries: Blank, or 600S, 609S, or 1249S

Data Rules:

If CBL SERIES is entered, CBL DISTANCE must be entered.

If CBL SERIES is 1249S, CBL DISTANCE must be 0 - 450.

If CBL SERIES is 600S, CBL DISTANCE must be 0 - 650.

If CBL SERIES is 609S, CBL DISTANCE must be 0 - 655.

2.28 CBL DISTANCE

Description: Enter the cable distance between the DLTU and DSX panel.

Required Field.

Valid CBL DISTANCE Entries

Entry	Description
0 - 450	1249S Series.
0 - 650	600S Series.
0 - 655	609S Series.

Data Rules:

If CBL DISTANCE is entered, CBL SERIES must be entered.

Copyright © 2006 Lucent Technologies

BUS USE

2.29 TEST TYPE 0

Description: Enter the test type.

Software Release: 5E12 and later
Required Field.
Default: N
Valid Entries:

Valid TEST TYPE Entries	
Entry	**Description**
E	External.
M	Metallic Test Bus.
N	No Equipment.
T	Test Pack.

Data Rules:

If TEST TYPE 0/1 is "E", "N", or "T", MTB0/1 must be unknown for the EAIU.

If TESTTYPE 0/1 is "T":

- there must be an EQAIUP form at the same site with TYPE set to "AIUTSTP".

If TEST TYPE 0/1 is "M", TEST TYPE 0/1 MTB0/1 must be known.

2.30 TEST TYPE 1

Description: Enter the type of test pack.

Software Release: 5E12 and later
Required Field.
Default: N

Required Field.
Valid Entries:

Valid TEST TYPE Entries	
Entry	**Description**
E	External.
M	Metallic Test Bus.
N	No Equipment.
T	Test Pack.

TIME SLOT GROUP (PIDB)

The following fields (Section 2.31 - Section 2.34) define the PIDBs (Peripheral Interface Data Buses) for the AIU.

2.31 PIDB TYPE

Description: Enter the PIDB TYPE.

NOTE: For the 5E11 Software Release, only the DI (Data Interface) capability is available; the

DFPOS (Data Fan Position for the PSU SHLF (Packet Switching Unit Shelf) is not available. For 5E12 and later, the PSU SHLF capability is available.

Valid Entries:

5E11 Software Release: AIU
5E12 Software Release: AIU or PSU

Data Rules:

For 5E11, if PIDB TYPE is entered:

- DI/DFPOS, PIDB/PSU SHLF and EQSTAT fields must be entered.
- PIDB of PIDB/PSU SHLF must be an even number.

If PIDB TYPE is not entered, DI/DFPOS, PIDB/PSU SHLF and EQSTAT fields must not be entered.

For 5E12 and later, if PIDB TYPE is entered:

- DI/DFPOS, PIDB/PSU SHLF and EQSTAT fields can be entered or left blank.
- combinations of PIDB TYPE, DI/DFPOS and PIDB/PSU SHLF must be unique within a LOCAL TIME SLOT GROUP (PIDB) list.

If PIDB TYPE is "PSU":

- PIDB/PSU SHLF must be 0 - 4.
- an EQPSUPH form must be defined with the same SM and PSU SHELF combination.
- an EQPSU form must be defined with matching PSU SHELF and the PSU SHELF 0/1 EQSTAT must be "O" on the EQPSU form.
- the PSU SHELF SIDE 0 or 1 CLI values must not be 3 ("PSU" PIDB TYPEs cannot be associated with data fanout multiple PIDB PSU shelves).
- the PSU SHELF/DF POS assignments must not duplicate assignments of the EQAIU, EQIDCU and/or EQISLU form for a specified SM.

TSGRP NO 0 in LOCAL TIME SLOT GROUP (PIDB) must have a PIDB TYPE of "AIU".

NOTE: The total number of timeslots, per DPIDB, cannot be greater than 32. ODA error message "ISDN(287a/b/c)" is generated whenever more than 32 timeslots have been assigned/reserved. ISDN(287a) details the overloaded DPIDBs and ISDN(287b) lists all the nailed up timeslots that have been manually or automatically assigned. ISDN(287c) provides all the timeslots reserved on the ODBTS form. Timeslots reserved on the ODBTS form will need to be re-assigned to correct the DPIDBs in error. ISDN(287a/b/c) is a companion error message to "ISDN(288a/b/c)" which is generated when D and/or B Channel TIMESLOTS cannot be assigned by ODA because of a lack of DPIDB timeslots which are assigned on the EQAIU form with a PIDB TYPE of "PSU").

For 5E14 and later, TSGRP NO 0 in TIME SLOT GROUP (PIDB) must have a PIDB TYPE of "AIU".

Copyright © 2006 Lucent Technologies

2.32 DI/DFPOS

Description: This field is used to define the DI/DFPOS fields. See Note in the PIDB TYPE field above.

Valid DI Entries

Entry	Description
0 - 1	DI - SM.
0 - 5	DI - SM-2000 class processor.
0 - 5	DFPOS.

2.33 PIDB/PSU SHLF

Description: This field is used to define the PIDB/PSU SHELF fields. See Note in the PIDB TYPE field above.

Valid PIDB/PSU SHLF Entries - 5E11

Entry	Name
0 - 14 (even)	PIDB - SM.
0 - 22 (even)	PIDB - SM-2000 class processor.

Valid PIDB/PSU SHLF Entries - 5E12 and later

Entry	Name
0 - 14 (even)	PIDB - SM.
0 - 22 (even)	PIDB - SM-2000 class processor.
0 - 4	PSU Shelf.

2.34 EQSTAT

Description: Enter the status of the PIDB.

Valid PIDB EQSTAT Entries

Entry	Description
U	Unequipped.
G	Growth.
O	Operational.

If PIDB.EQSTAT is "G" or "O", MTB0 and MTB1 must be known.

If PIDB.EQSTAT in rows 2 - 6 is "G" or "O", EQSTAT in row 1 must be "O".

REMOTE COMDAC 0/1 TIME SLOT GROUP (TSPFAC0/1)

2.35 TRANSPORT TYPE

Description: Enter the Transport Type.

Software Release: 5E12 and later
Valid Entries:

Valid TRANSPORT TYPE Entries

Entry	Description
[DL]TU	Digital Line Trunk Unit.
[DN]US	Digital Networking Unit - SONET.

Data Rules:

Copyright © 2006 Lucent Technologies

For 5E12:
If TSPFAC0/1.TRANSPORT TYPE is entered, TSPFAC0/1.EQSTAT must be entered.

If TSPFAC0/1.TRANSPORT TYPE is "DLTU":

- TSPFAC0/1.DLTU/DNUS must be 0 - 5.
- TSPFAC0/1.PK/DG must be 1 - 10.
- TSPFAC0/1.FAC/STS must be 0 - 1.
- TSPFAC0/1.VT must not be entered.
- combinations of DLTU/DNUS, PK/DG, and FAC/STS must be unique within the REMOTE COMDAC 0/1 Time SLOT GROUP (TSPFAC0/1) list.
- combinations of DLTU/DNUS, PK/DG, and VT must be unique within the REMOTE COMDAC 0/1 Time SLOT GROUP (TSPFAC0/1) list.
- combinations of DLTU/DNUS, PK/DG, and FAC/STS must be unique within the REMOTE COMDAC 0/1 Time SLOT GROUP (TSPFAC0/1) list.
- combinations of DLTU/DNUS, PK/DG and FAC/STS must be unique between the TSPFAC0 list and TSPFAC1 list.

If TSPFAC0/1.TRANSPORT TYPE is "DNUS":

- TSPFAC0/1.PK/DG must be 0 - 1.
- TSPFAC0/1.VT must be 1 - 28.
- combinations of DLTU/DNUS, PK/DG and FAC/STS must be unique between the TSPFAC0 list and TSPFAC1 list.

For 5E13 and later, if TRANSPORT TYPE is blank, TSPFAC0 DLTU/DNUS, PK/DG, FAC/STE, STS, VT GROUP, VT MEMBER, and EQSTAT must be blank.

If TSPFAC0/1.TRANSPORT TYPE is "DLTU":

- TSPFAC0/1.FAC/STE must be 0 - 1.
- TSPFAC0/1.STS must not be entered.
- TSPFAC0/1.VTG and VTM must not be entered.
- combinations of DLTU/DNUS, PK/DG and FAC/STE must be unique between the TSPFAC0 list and TSPFAC1 list.

If TSPFAC0/1.TRANSPORT TYPE is "DNUS":

- TSPFAC0/1.FAC/STE must be 1 - 6.

Copyright © 2006 Lucent Technologies

- TSPFAC0/1.FAC/STS must be 1.
- TSPFAC0/1.VTG must be 1 - 7.
- TSPFAC0/1.VTM must be 1 - 4.
- combinations of DLTU/DNUS, PK/DG, FAC/STE, STS, VTG, and VTM must be unique between the TSPFAC0 list and TSPFAC1 list.
- combinations of DLTU/DNUS, PK/DG, and FAC/STS must be unique within the REMOTE COMDAC 0/1 TIME SLOT GROUP (TSPFAC0/1) list.

2.36 DLTU/DNUS

Description: Enter the DLTU or DNUS number.

Software Release: 5E12 and later
Valid Entries:

Valid DLTU/DNUS Number Entries

Entry	Description
Blank	Not used.
5E12 - 5E14: 0 - 5 5E15 and later: 0 - 11	DLTU.
0 - 7	DNUS.

2.37 PK/DG

Description: Enter the DFI pack or DNUS data group number.

Valid PK/DG Entries

Entry	Description
Blank	Not used.
1 - 10	DFI pack.
0 - 1	DNUS data group number.

2.38 FAC/STS

Description: Enter the DFI facility or DNUS synchronous transport signal number. For 5E13 and later, this field was modified to support the DNU-S VT Group Number feature. See STS below. Also see Division 2, Section 9Q.

Software Release: 5E12 only
Valid Entries:

Valid FAC/STS Entries

Entry	Description
Blank	Not used.
0 - 1	DFI facility.
0 - 5	DNU-S facility.
1 - 6	DNU-S termination equipment number.

2.39 FAC/STE

Description: Enter the DFI facility or DNU-S Termination Equipment number. This field was added in 5E13 to support the DNU-S VT Group Number feature. See Division 2, Section 9Q.

Copyright © 2006 Lucent Technologies

Software Release: 5E13 and later
Valid Entries:

Valid FAC/STE Entries - 5E13 and later	
Entry	**Description**
Blank	Not used.
0 - 1	DFI FACility.
1 - 6	DNU-S Termination Equipment number.

2.40 STS

Description: Enter synchronous transport signal number. This field was added in 5E13 to support the DNU-S VT Group Number feature. See Division 2, Section 9Q.

Software Release: 5E13 and later
Valid Entries: Blank or 1

2.41 VT

Description: Enter the Virtual Tributary. For 5E13 and later, this field was split into the VTG and VTM fields to support the DNU-S VT Group Number feature. See Division 2, Section 9Q.

Software Release: 5E12 only
Valid Entries: Blank, or 1 - 28

2.42 VTG

Description: Enter the Virtual Tributary Group number. This field was added in 5E13 to support the DNU-S VT Group Number feature. See Division 2, Section 9Q.

Software Release: 5E13 and later
Valid Entries: 1 - 7

2.43 VTM

Description: Enter the Virtual Tributary Member number. This field was added in 5E13 to support the DNU-S VT Group Number feature. See Division 2, Section 9Q.

Software Release: 5E13 and later
Valid Entries: 1 - 4

2.44 EQSTAT

Description: Enter the Transport Type.

Software Release: 5E12 and later

Data Rules:

If TSPFAC0.EQSTAT in rows 2 - 6 is "G" or "O", TSPFAC0.EQSTAT in row 1 must be "O".

EQSTAT of row1 REMOTE COMDAC0 AND REMOTE COMDAC 1 cannot be "U".

2.45 XAIU CONFIG

Copyright © 2006 Lucent Technologies

Description: This field is used to identify whether or not the AIU is to be remotely used. AIUs can be remotely used only if the Switching Module is of type SM-2000. This is a Display Only field that was added to support the XAIU (Multiplexed Access Interface Unit) feature. For more information on this feature, see Division 2, Section 9T.

Software Release: 5E14 and later
Valid Entries:

XAIU Configuration Table

Configuration	Fiber Link	AIUs/ Cabinet	Line Concentration	Call Volume
Low traffic 5E14 and later	Two half-PCTs	6	approx. 5:1	7 CCS or less
Medium 1 (Option 2) traffic 5E14 FR 6, 5E15 FR2 and later 99-5E-7727	Two half-PCTs	4	approx. 3.3:1	12 CCS or less
Medium (Option 1) traffic 5E14 FR3, 5E15 BMI and later 99-5E-7726	Two full PCTs	6	approx. 2.5:1	14 CCS or less
High traffic 5E14 and later	Two full PCTs	4	approx. 1.7:1	21 CCS or less

Data Rules:

For the 5E14 Software Release:

When XAIU CONFIG is "HIGH", SHELF must not be 2 or 5.

When XAIU CONFIG is "LOW", no more than 2 rows of the TIME SLOT GROUP (XAIUTSGRP) may be entered.

When XAIU CONFIG is "MED", no more than 4 rows of the TIME SLOT GROUP (XAIUTSGRP) may be entered.

For 5E14 Feature Releases and later:

When XAIU CONFIG is "MED" (Option 1), no more than 4 rows of the TIME SLOT GROUP (XAIUTSGRP) may be entered.

When XAIU CONFIG is "MED1" (Option 2), no more than 3 rows of the TIME SLOT GROUP (XAIUTSGRP) may be entered.

2.46 PDXU

Description: The PCT (Peripheral Control and Timing) Data Exchanger Unit is used to specify which PDXU is being used.

WARNING: The combination of SM/PDXU must be defined on the EQPDXU form (5868 Record).

Software Release: 5E14 and later
Valid Entries: Blank, or 0 - 35

Copyright © 2006 Lucent Technologies

Data Rules:

When PDXU is entered, this PDXU must be defined on an EQPDXU form (5868 Record).

The combination of PDXU and SHELF entries on this form where the AIU TYPE is "XAIU", must be unique for a given SM.

2.47 SHELF

Description: This field defines the XAIU shelf number.

Software Release: 5E14 and later
Valid Entries: Blank, or 0 - 5

Data Rules:

For 5E14 Feature Releases and later, when SHELF is equal to "2" or "5", XAIU CONFIG must not be set to "MED1" or "HIGH" on the corresponding EQPDXU form.

2.48 TSGRP LIMIT

Description: This field identifies the number of XAIU Time Slot Groups allowed.The values used depend upon the PASSWORD provided to the customer. This is a display only field. If XAIU CONFIG is LOW, then TSGRP LIMIT can be a value up to 2. If XAIU CONFIG is HIGH, then TSGRP LIMIT can be a value up to 6.

Software Release: 5E14 and later

2.49 PASSWORD

Description: This field is the secured feature password and is used to specify the number of XAIU TGSGRPs allowed. This is a display only field.

Software Release: 5E14 and later

TIME SLOT GROUP (XAIUTSGRP)

2.50 EQSTAT

Description: This field is used to determine the XAIU Time Slot Group equipage state.

Software Release: 5E14 and later
Valid Entries:

Valid EQSTAT Entries - 5E14 and later

Entry	Description
G	Grow
O	Operational
U	Unequipped

Data Rules:

EQSTAT of TIME SLOT GROUP (XAIUTSGRP) row 1 cannot be "U".

When XAIUTSGRP.EQSTAT in rows 2 - 6 is "G" or "O", XAIUTSGRP.EQSTAT in row 1 must be "O".

Copyright © 2006 Lucent Technologies

The number of TIME SLOT GROUP (XAIUTSGRP) rows entered must not be greater than TSGRP LIMIT.

```
eqaiu                              5ESS Switch
SCREEN 1 OF 5                OFFICE DATA ADMINISTRATION
(5745-1/2/3)                    ACCESS INTERFACE UNIT

*1. SM         ___           14. CI   _                        REMOTE COMDAC
*2. AIU        ___           15. PICB __               19. COMDAC STATE     ___
 3. AIU TYPE  AIU                                      20. RCOMDAC0 EXT REF N
 4. BROADBAND N                RING GENERATOR          21. RCOMDAC1 EXT REF N
 5. AIU SIZE  600            16. RING GEN LOC   ___    22. SITE ID          ___
#6. EQL AISLE ____           17. EXT RG0 EQSTAT _      23. CBL SERIES       ___
#7. EQL BAY   ___            18. EXT RG1 EQSTAT _      24. CBL DISTANCE     ___
#8. EQL UNVER __
#9. CABINET   _____                                         BUS USE
10. CLI       00000000                                  25. TEST TYPE 0 N
11. MTB0      _________                                 26. TEST TYPE 1 N
12. MTB1      _________
```

```
eqaiu                              5ESS Switch
SCREEN 2 OF 5                OFFICE DATA ADMINISTRATION
(5745-1/2/3)                    ACCESS INTERFACE UNIT

    >27. TIME SLOT GROUP (PIDB)
    TSGRP PIDB  DI/   PIDB/
ROW NO    TYPE  DFPOS PSUSHLF EQSTAT
 1    0   _____   _     __      _
 2    1   _____   _     __      _
 3    2   _____   _     __      _
 4    3   _____   _     __      _
 5    4   _____   _     __      _
 6    5   _____   _     __      _
```

```
eqaiu                              5ESS Switch
SCREEN 3 OF 5                OFFICE DATA ADMINISTRATION
(5745-1/2/3)                    ACCESS INTERFACE UNIT

   >33. REMOTE COMDAC 0 TIME SLOT GROUP (TSPFAC0)
    TSGRP TRANSPORT DLTU/ PK/ FAC/
ROW NO    TYPE      DNUS  DG  STE  STS VTG VTM EQSTAT
 1    0     ____      _   __   _    _   _   _    _
 2    1     ____      _   __   _    _   _   _    _
 3    2     ____      _   __   _    _   _   _    _
 4    3     ____      _   __   _    _   _   _    _
 5    4     ____      _   __   _    _   _   _    _
 6    5     ____      _   __   _    _   _   _    _
```

```
eqaiu                              5ESS Switch
SCREEN 4 OF 5              OFFICE DATA ADMINISTRATION
(5745-1/2/3)                  ACCESS INTERFACE UNIT

   >44. REMOTE COMDAC 1 TIME SLOT GROUP (TSPFAC1)
    TSGRP TRANSPORT DLTU/ PK/ FAC/
ROW NO    TYPE      DNUS  DG  STE  STS VTG VTM EQSTAT
 1    0     _____      _   __   _    _   _   _    _
 2    1     _____      _   __   _    _   _   _    _
 3    2     _____      _   __   _    _   _   _    _
 4    3     _____      _   __   _    _   _   _    _
 5    4     _____      _   __   _    _   _   _    _
 6    5     _____      _   __   _    _   _   _    _
```

```
eqaiu                              5ESS Switch            _
SCREEN 5 OF 5              OFFICE DATA ADMINISTRATION
(5745-1/2/3)                  ACCESS INTERFACE UNIT

     XAIU CONFIG ____         60. TIME SLOT GROUP (XAIUTSGRP)
>56. PDXU        __               TSGRP
 57. SHELF       _            ROW NO    EQSTAT
     TSGRP LIMIT _             1    0     _
     PASSWORD    ________      2    1     _
                               3    2     _
                               4    3     _
                               5    4     _
                               6    5     _
```

Figure 1 SAMPLE EQAIU FORM 5E14 SOFTWARE RELEASE

```
eqaiu                              5ESS Switch
SCREEN 1 OF 5              OFFICE DATA ADMINISTRATION
(5745-1/2/3)                  ACCESS INTERFACE UNIT

*1. SM        ___          13. INTF UNIT _                  REMOTE COMDAC
*2. AIU       ___          14. CI        _          19. COMDAC STATE     _______
 3. AIU TYPE  AIU          15. PICB      __         20. RCOMDAC0 EXT REF N
 4. BROADBAND N                                      21. RCOMDAC1 EXT REF N
 5. AIU SIZE  600             RING GENERATOR       22. SITE ID          ___
#6. EQL AISLE ____         16. RING GEN LOC   ___   23. CBL SERIES       _____
#7. EQL BAY   ___          17. EXT RG0 EQSTAT _     24. CBL DISTANCE     ___
#8. EQL UNVER __           18. EXT RG1 EQSTAT _
#9. CABINET   _____                                      BUS USE
10. CLI       00000000                              25. TEST TYPE 0 N
11. MTB0      _________                             26. TEST TYPE 1 N
12. MTB1      _________
```

```
eqaiu                              5ESS Switch
SCREEN 2 OF 5                OFFICE DATA ADMINISTRATION
(5745-1/2/3)                    ACCESS INTERFACE UNIT

    >27. TIME SLOT GROUP (PIDB)
    TSGRP PIDB  DI/   PIDB/
ROW NO    TYPE  DFPOS PSUSHLF EQSTAT
 1    0   ______   _     __      _
 2    1   ______   _     __      _
 3    2   ______   _     __      _
 4    3   ______   _     __      _
 5    4   ______   _     __      _
 6    5   ______   _     __      _
```

```
eqaiu                              5ESS Switch
SCREEN 3 OF 5                OFFICE DATA ADMINISTRATION
(5745-1/2/3)                    ACCESS INTERFACE UNIT

   >33. REMOTE COMDAC 0 TIME SLOT GROUP (TSPFAC0)
    TSGRP TRANSPORT DLTU/ PK/ FAC/
ROW NO      TYPE    DNUS  DG  STE  STS VTG VTM EQSTAT
 1    0     _____    __   __   _    _   _   _    _
 2    1     _____    __   __   _    _   _   _    _
 3    2     _____    __   __   _    _   _   _    _
 4    3     _____    __   __   _    _   _   _    _
 5    4     _____    __   __   _    _   _   _    _
 6    5     _____    __   __   _    _   _   _    _
```

```
eqaiu                              5ESS Switch
SCREEN 4 OF 5                OFFICE DATA ADMINISTRATION
(5745-1/2/3)                    ACCESS INTERFACE UNIT

   >44. REMOTE COMDAC 1 TIME SLOT GROUP (TSPFAC1)
    TSGRP TRANSPORT DLTU/ PK/ FAC/
ROW NO      TYPE    DNUS  DG  STE  STS VTG VTM EQSTAT
 1    0     _____    __   __   _    _   _   _    _
 2    1     _____    __   __   _    _   _   _    _
 3    2     _____    __   __   _    _   _   _    _
 4    3     _____    __   __   _    _   _   _    _
 5    4     _____    __   __   _    _   _   _    _
```

Copyright © 2006 Lucent Technologies

```
 6    5     ____     __   __   _    _   _   _    _
```

```
eqaiu                              5ESS Switch            _
SCREEN 5 OF 5              OFFICE DATA ADMINISTRATION
(5745-1/2/3)                  ACCESS INTERFACE UNIT

     XAIU CONFIG ____         60. TIME SLOT GROUP (XAIUTSGRP)
>56. PDXU        __               TSGRP
 57. SHELF       _            ROW NO    EQSTAT
     TSGRP LIMIT _             1    0     _
     PASSWORD    ________      2    1     _
                               3    2     _
                               4    3     _
                               5    4     _
                               6    5     _
```

Figure 2 SAMPLE EQAIU FORM 5E15 AND LATER SOFTWARE RELEASES

Copyright © 2006 Lucent Technologies

SEC. 65: 5746 RECORD
ACCESS INTERFACE UNIT PACK - EQAIUP

1. GENERAL

The 5746 Record is available with the 5E11 Software Release. It is used to define the AIU (Access Interface Unit) packs. For 5E12 and later, Remote AIU is made available. See Division 2, Section 9O.

1.1 Recent Change View

The corresponding Recent Change View for this form is 20.16.

2. FORM AND RECORD ENTRIES

2.1 BASE AND CONTROL, ESS UNIT

Enter the Base and Control Number and the Office Name on each record.

2.2 * SM

Description: Enter the Switch Module identification number.

Required Field.
Valid Entries: 1 - 192

2.3 * AIU

Description: Enter the Access Interface Unit identification number.

Required Field.

Valid AIU Entries - 5E11

Entry	Description
0 - 14	SM.
0 - 42	SM-2000.

Valid AIU Entries - 5E12 and later

Entry	Description
0 - 14	SM.
0 - 127	SM-2000.

The SM/AIU combination entered on this form must be defined on a corresponding EQAIU form.

The AIU entered must have its RING GEN LOC defined on the matching EQAIU form.

2.4 * APPL PACK NUM

Description: Enter the Application Pack Number (slot number).

Required Field.
Valid Entries: 0 - 19

Data Rules:

If 17 or 19 is entered, and TYPE is "AIRG", the associated EQAIU form must have an AIU SIZE of 600.

Copyright © 2006 Lucent Technologies

If 11 or 13 is entered, and TYPE is "AIRG", the associated EQAIU form must have an AIU SIZE of 500.

2.5 * TYPE

Description: This field defines the pack type. The following conditions must be observed when equipping RG (Ring Generator) and application packs:

- An AIU with RG packs must use its own RG packs before any other AIU can be assigned to use those packs. (For example, if 2 RG packs are operational on AIU 1 and no AIU, including AIU 1, is currently using those packs (i.e., no AIU on that SM has RING GEN LOC set to 1), then RING GEN LOC 1 cannot be set for AIU 2).
- If an application pack (besides RG packs) exists on an AIU, then both pack 17 and 19 of the RING GEN LOC AIU must be operational.
- If application packs (besides RG packs) do not exist on an AIU, then both pack 17 and 19 of the RING GEN LOC AIU must be operational or growth.
- An AIU with two operational RG packs must use its own RG packs.

Required Field.

Valid TYPE Entries

Entry	Definition
[AIC]LP	5E11 Software Update: Coin pack. AIU feature.
[AIC]SP	5E16(2) and later Software Release. Control & Switching Pack
AIEFI	5E16(2) and later Software Release. Emergency Interface Pack
AIGLC	5E11-5E12 Software Update: ATM Feeder Multiplexer pack.
AIGLP	5E11-5E16 Software Update: Asymmetric Digital Subscriber Line pack.
[AIR]G	5E11 Software Release: Ring generator pack. Must be used in pairs.
[AIUAD]SLLP	5E13 Software Update and 5E14 and later Software Releases: Asymmetric digital subscriber line pack.
[AIUAF]M	5E13 Software Update and 5E14 amd later Software Releases: ATM feeder multiplexer pack.
[AIUT]STP	5E12 Software Update: AIU Integrated Metallic Test Pack feature. Test packs are only valid on External AIUs. There can be only one test pack per site on a remote AIU.
[AIU]LP	5E12 Software Update: AIU ISDN pack.
[AIZ]LP	5E11 Software Release: Analog application pack.

Data Rules:

For 5E11 only, when TYPE is "AIRG", APPL PACK NUM must be 17 or 19. See also 5E12.

Copyright © 2006 Lucent Technologies

For 5E11 - 5E12:

When TYPE is "AIGLP",

- at least one "AIGLC" pack must exist for the same SM and AIU.

When TYPE is "AIGLC" or "AIGLP",

- EQSTAT must be "U".
- BROADBAND on the EQAIU form must be "Y".

When TYPE is "AIRG",

- and APPL PACK NUM is 17, for the same SM/AIU combination, APPL PACK NUM 16 and 18 must not be assigned and APPL PACK NUM 19 can only have a TYPE of "AIRG".
- For 5E11 only, when TYPE is "AIRG", and APPL PACK NUM is 19, for the same SM/AIU combination, there must be another EQAIUP form with APPL PACK NUM of 17 and TYPE of "AIRG".
- When TYPE is "AIZLP" or "AICLP", for the same SM/AIU combination, there must be two other EQAIUP forms defined with TYPE of "AIRG", and APPL PACK NUM of 17 and 19 must be known.

For 5E12 and later:

When TYPE is "LP2ADSL", "AIZLP", "AICLP", or "AIGLP",

- at least one Ring Generator serving this AIU must be operational. An EQAIUP form must exist for this AIU with TYPE equal to "AIRG", and EQSTAT equal to "O", or an EQAIU form must exist for this AIU with either EXT RGO EQSTAT or EXT RG1 EQSTAT equal to "O", or RING GEN LOC does not point to another AIU with an operational RG.

When TYPE is "ALGLP", "AIZLP", "AICLP", "AIULP", or "AIURPLP".

CLI must be 0h or 80000000h.

When TYPE is "AIRG",

- APPL PACK NUM must be 17 or 19.
  - If APPL PACK NUM 11 is assigned for the same SM/AIU combination, APPL PACK NUM position 10 cannot be assigned. If APPL PACK NUM 13 is assigned, APPL PACK NUM position 12 cannot be assigned.

When TYPE is "AIRG", and a Ring Generator is assigned,

- AIU EQSTAT must be "O".

Copyright © 2006 Lucent Technologies

When TYPE is "AIUTSTP",

- SLIM RI must be known, and must be defined on the RTIDX form with ROUTE TYPE equal to "HUNT".
- there must be at least 3 LTP assignments on the TRUNK form that are associated with a TRKCLS equal to "LTPSLIM" on the TKGRP form. For these LTPs, the SM on the EQAIUP form must correspond with the first three digits of the LTP on the TRUNK form.

When TYPE is "AIULP",

- at least one TSGRP NO must be entered with PIDB TYPE of "PSU" on the EQAIU form.

When TYPE is "AIURPLP",

- the last two digits of the Equipment Numbers with OE TYPE of "E" must be between 00 and 11 on the DSL, DSLAP, or RDTAPORT forms (NOTE: OE = aaabbbcc, where aaa= SM, bbb= AIU, cc = APPL PACK NUM).

For 5E13 and later:

When TYPE is "AIUADSLLP",

- at least one "AIUAFM" pack must exist for the same SM and AIU.

When TYPE is "AIUADSLLP" or "AIUAFM",

- EQSTAT must be "U".
- BROADBAND on the EQAIU form must be "Y".

2.6 EQSTAT

Description: Enter the status of the pack.

Required Field.
Default: O
Valid Entries:

Valid EQSTAT Entries

Entry	Description
U	Unequipped.
G	Growth.
O	Operational.

2.7 CLI

Description: Enter the Change Level Indicator for the pack. Refer to Division 8, Section 1 for CLI values.

Required Field.
Valid Entries: 0 - 80000000

Copyright © 2006 Lucent Technologies

2.8 SEAL CUR

Description: This field was added for the AIU ISDN feature. Should sealing current be sent to the line pack?

Software Release: 5E12 and later
Required Field.
Default: N
Valid Entries: Y, N

Data Rules:

When SEAL CUR is "Y", TYPE must be "AIULP".

2.9 SLIM ROUTE INDEX

Description: This field was added for the AIU Test Pack feature. Enter the SLIM Route Index number.

Required Field.
Default: 0
Valid Entries:

For 5E11: Blank, or 0 - 8191
For 5E12 and later: Blank, or 0 - 4095

Data Rules:

When SLIM ROUTE INDEX is greater than 0, TYPE must be "AIUTSTP".

For 5E12 and later, when SLIM ROUTE INDEX is entered, the index must be defined on an RTIDX form.

```
eqaiup                          5ESS SWITCH
(5746)                     OFFICE DATA ADMINISTRATION
                           ACCESS INTERFACE UNIT PACK

*1. SM            ___
*2. AIU           __
*3. APPL PACK NUM __
#4. TYPE          _____
#5. EQSTAT        _
#6. CLI           ________
```

Figure 1 SAMPLE EQAIUP FORM 5E11 SOFTWARE RELEASE

```
eqaiup                           5ESS Switch            _
                           OFFICE DATA ADMINISTRATION
(5746)                     ACCESS INTERFACE UNIT PACK

*1. SM               001
*2. AIU              001
*3. APPL PACK NUM    01
```

Copyright © 2006 Lucent Technologies

```
#4. TYPE              AICLP
5. EQSTAT            O
6. CLI               00000000
7. SEAL CUR          Y
8. SLIM ROUTE INDEX 0000
```

Figure 2 SAMPLE EQAIUP FORM 5E12 AND LATER SOFTWARE RELEASES

Copyright © 2006 Lucent Technologies

SEC. 66: 5826 RECORD
ETHERNET PIPE - ENETPIPE

1. GENERAL

The 5826 Record is available with the 5E12 and later Software Releases. It is used to enable the craft to review and update the ethernet links connected to an MH (Message Handler). This form supports the RTCD (Real Time Call Detail) platform and the STS-I External Echo Cancellation features. For more information on these features, see Division 2, Section 4a245 and Division 2, Section 9P respectively.

1.1 Recent Change View

The corresponding Recent Change View for this form is 19.20.

2. FORM AND RECORD ENTRIES

2.1 BASE AND CONTROL, ESS UNIT

Enter the Base and Control Number and the Office Name on each record.

2.2 * SM

Description: The SM field is used to specify the switching module number.

Required Field.
Valid Entries: 1 - 192

Data Rules:

For 5E12 and later:

- only one ENETPIPE form tuple is allowed per SM.
- when the ENETPIPE form is entered, the EQIM form must have the SM defined as an SM-2000 class processor.
- when the ENETPIPE form is entered, two corresponding EQPIPE forms must exist where QLPS NETWORK is equal 0 and 1.
- when the ENETPIPE form is entered, the corresponding EQMH form must exist where:
  - MH = 2
  - MH SIDE 0 EQSTAT = "O"
  - MH SIDE 0 CLI = 3
  - MH SIDE 1 EQSTAT = "O" and
  - MH SIDE 1 CLI = 3

2.3 * ENET PIPE

Copyright © 2006 Lucent Technologies

Description: The ENET PIPE field is used to specify the number of the external ethernet pipe.

Required Field.
Default: 0
Valid Entries: 0

2.4 MH

Description: The MH field is used to specify the message handler number.

2.5 EIB TYPE

Description: The EIB TYPE field is used to describe the type of external ethernet interface board.

2.6 # SERV TYPE

Description: The SERV TYPE field is used to specify the ethernet link service type.

Required Field.
Valid Entries:

5E13 and 5E14: EEC (External Echo Canceler) or RTCD (Real Time Call Detail)

5E15 and later: EEC, RTCD, or VTOA (Voice Telephony Over ATM (Asynchronous Transfer Mode))

5E20 and later: OMP (Operations, Maintenance and Administration Platform)

Data Rules:

For 5E13 and later:

- When SERV TYPE is "EEC", MANAGED HUB must be "Y".
- When SERV TYPE is "EEC", EIB IP ADDR 0, EIB IP ADDR 1, HUB IP ADDR 0 and HUB IP ADDR 1 must equal respectively 192.11.200.5, 192.11.201.6, 192.11.200.250 and 192.11.201.250.
- When SERV TYPE is "RTCD", only one such ENETPIPE form tuple is allowed per office.

For 5E15 and later, when SERV TYPE is "VTOA", MANAGED HUB must be "Y".

When SERV TYPE is "VTOA":

EIB IP ADDR 0 and EIB IP ADDR 1 must be entered.

HUB IP ADDR 0 and HUB IP ADDR 1 must be entered.

HUB IP ADDR 0 and EIB IP ADDR 0 must be different.

HUB IP ADDR 0 and EIB IP ADDR 1 must be different.

HUB IP ADDR 0 and HUB IP ADDR 1 must be different.

Copyright © 2006 Lucent Technologies

the first 2 elements of HUB IP ADDR 0 and HUB IP ADDR 1 must be the same.

EIB IP ADDR 0 and HUB IP ADDR 1 must be different.

EIB IP ADDR 1 and HUB IP ADDR 1 must be different.

the first 2 elements of EIB IP ADDR 0 and EIB IP ADDR 1 must be the same.

For 5E16 and later:

When SERV TYPE is "CFS", EIB IP ADDR 0 and EIB IP ADDR 1 must be entered.

When SERV TYPE is "CFS" and MANAGED HUB is "Y", HUB IP ADDR 0 and HUB IP ADDR 1 must be entered.

When SERV TYPE is "CFS", the ACT field for SFID 602 on the SFSYS form (5713-1 Record) must be set to "Y".

For 5E16(2) and later, SERV TYPE must be "CFS", "EEC", or "RTCD".

5E20 and later

When SERV TYPE is "OMP":

EIB IP ADDR 0 and EIB IP ADDR 1 must be entered.

HUB IP ADDR 1 must not be entered.

HUB HW ADDR 0 and HUB HW ADDR 1 must not be entered.

EIB IP ADDR 0 and EIB IP ADDR 1 cnanot take a value of the format x.x.x.254.

EIB IP ADDR 0 and EIB IP ADDR 1 must be different.

EIB HW ADDR 0 and EIB HW ADDR 1 must be different.

elements 3 of EIB HW ADDR 0 must be equal to element 3 of EIB HW ADDR 1.

elements 4 of EIB HW ADDR 0 must be equal to element 4 of EIB HW ADDR 1.

elements 5 of EIB HW ADDR 0 must be equal to element 5 of EIB HW ADDR 1.

When SERV TYPE is "OMP" and MANAGED HUB is "N":

IP ADDR 0 SIDE 0 and IP ADDR SIDE 1 must be equal

IP ADDR 1 SIDE 0 and IP ADDR 1 SIDE 1 must be not be entered.

The following fields must not be entered on the ENETLINK form (5827 Record):

GATEWAY IP ADDR SIDE 0

GATEWAY IP ADDR SIDE 1

Copyright © 2006 Lucent Technologies

GATEWAY NET MASK SIDE 0

GATEWAY NET MASK SIDE 1

IP ADDR 0 SIDE 0

IP ADDR 0 SIDE 1

When SERV TYPE is "OMP" and MANAGED HUB is "Y",

the following fields on the ENETLINK form must be entered:

GATEWAY IP ADDR SIDE 0

GATEWAY IP ADDR SIDE 1

GATEWAY NET MASK SIDE 0

GATEWAY NET MASK SIDE 1

IP ADDR 0 SIDE 0

IP ADDR 0 SIDE 1

EIB IP ADDR 0

EIB IP ADDR 1

HUB IP ADDR 0

GATEWAY IP ADDR SIDE 0 on the ENETLINK form (5827 Record) must equal HUB IP ADDR 0 on this form.

GATEWAY IP ADDR SIDE 0 on the ENETLINK form (5827 Record) must not equal IP ADDR 0 SIDE 0 on the ENETLINK form.

IP ADDR 0 SIDE 0 and IP ADDR SIDE 1 must be equal.

IP ADDR 1 SIDE 0, IP ADDR 1 SIDE 1, and HUB IP ADDR 1 must be not be entered.

When SERV TYPE is not "OMP":

HW ADDR 0 SIDE 0 must not be 00:00:00:00:00:00.

EIB SIDE 0 RATE must be "10HD".

EIB SIDE 1 RATE must be "10HD".

Copyright © 2006 Lucent Technologies

2.7 DUPLEX HUB

Description: The DUPLEX HUB field is used to indicate if the hub has a duplex or simplex configuration.

2.8 MANAGED HUB

Description: The MANAGED HUB field is used to indicate if the hub is managed or unmanaged.

Required Field.
Default: Y
Valid Entries: Y, N

Data Rules:

For 5E13 and later:

- When MANAGED HUB is "N", then HUB HW ADDR 0 and HUB HW ADDR 1 must not be entered.
- When MANAGED HUB is "Y", and SERV TYPE is not "OMP", HUB HW ADDR 0 and HUB HW ADDR 1 must be entered.

2.9 EIB IP ADDR 0

Description: The EIB IP ADDR 0 field is used to indicate the internet protocol address that the side 0 EIB receives on and the hub/far end transmits to.

2.10 EIB IP ADDR 1

Description: The EIB IP ADDR 1 field is used to indicate the internet protocol address that the side 1 EIB receives on and the hub/far end transmits to.

2.11 EIB HW ADDR 0

Description: The EIB HW ADDR 0 field is used to specify the ethernet address for the side 0 EIB.

Required Field (as of 5E20).

Software Release: 5E20 and later
Default: 8, 0, 6ah, 19h, 6, and 5, respectively

2.12 EIB HW ADDR 1

Description: The EIB HW ADDR 1 field is used to specify the ethernet address for the side 1 EIB.

Required Field (as of 5E20).

Software Release: 5E20 and later
Default: 8, 0, 6ah, 19h, 6, and 6, respectively

2.13 HUB IP ADDR 0

Description: The HUB IP ADDR 0 field is used to indicate the internet protocol address that the hub connected to the side 0 EIB receives on and the side 0 EIB transmits to.

Copyright © 2006 Lucent Technologies

2.14 HUB IP ADDR 1

Description: The HUB IP ADDR 1 field is used to indicate the internet protocol address that the hub connected to the side 0 EIB receives on and the side 1 EIB transmits to.

2.15 HUB HW ADDR 0

Description: The HUB HW ADDR 0 field is used to specify the ethernet address for the hub connected to the side 0 EIB.
Valid Entries: 00 - ff hex

Data Rules:

For 5E13 and later, HUB HW ADDR 0 and HUB HW ADDR 1 must have different values.

2.16 HUB HW ADDR 1

Description: The HUB HW ADDR 1 field is used to specify the ethernet address for the hub connected to the side 1 EIB.
Valid Entries: 00 - ff hex

```
enetpipe                          5ESS SWITCH            _
                            OFFICE DATA ADMINISTRATION
(5826-1/2)                   ETHERNET PIPE ASSIGNMENT

*1. SM        ___                   DUPLEX HUB  Y
*2. ENET PIPE 0                  7. MANAGED HUB Y
    MH        2
    EIB TYPE  MHEIB
#5. SERV TYPE ____


                       EIB                            HUB
    IP ADDR 0      192.011.200.005              192.011.200.250
    IP ADDR 1      192.011.201.006              192.011.201.250
    HW ADDR 0      08:00:6a:19:06:05         42. __:__:__:__:__:__
    HW ADDR 1      08:00:6a:19:06:06         49. __:__:__:__:__:__
```

Figure 1 SAMPLE ENETPIPE FORM 5E13 AND 5E14 SOFTWARE RELEASES

```
enetpipe                          5ESS SWITCH            _
                            OFFICE DATA ADMINISTRATION
(5826-1/2)                   ETHERNET PIPE ASSIGNMENT

*1. SM        ___                   DUPLEX HUB  Y
*2. ENET PIPE 0                  7. MANAGED HUB Y
    MH        2
    EIB TYPE  MHEIB
```

```
#5. SERV TYPE _____


                      EIB                           HUB
    IP ADDR 0      ___.011.200.005               ___.011.200.250
    IP ADDR 1      ___.011.201.006               ___.011.201.250
    HW ADDR 0      08:00:6a:19:06:05         42. __:__:__:__:__:__
    HW ADDR 1      08:00:6a:19:06:06         49. __:__:__:__:__:__
```

Figure 2 SAMPLE ENETPIPE FORM 5E15 SOFTWARE RELEASE

```
enetpipe                          5ESS SWITCH            _
                            OFFICE DATA ADMINISTRATION
(5826-1/2)                   ETHERNET PIPE ASSIGNMENT

*1. SM         ___                   DUPLEX HUB  Y
*2. ENET PIPE 0                   7. MANAGED HUB Y
    MH        2
    EIB TYPE  MHEIB
#5. SERV TYPE _____


                      EIB                           HUB
    IP ADDR 0   8. ___.___.___.___           32. ___.___.___.___
    IP ADDR 1  13. ___.___.___.___           37. ___.___.___.___
    HW ADDR 0      08:00:6a:19:06:05         42. __:__:__:__:__:__
    HW ADDR 1      08:00:6a:19:06:06         49. __:__:__:__:__:__
```

Figure 3 SAMPLE ENETPIPE FORM 5E16 AND LATER SOFTWARE RELEASES

Copyright © 2006 Lucent Technologies

SEC. 67: 5827 RECORD
ETHERNET LINKS - ENETLINK

1. GENERAL

The 5827 Record is available with the 5E12 and later Software Releases. It is used to enable the craft to review and update the ethernet links connected to an MH (Message Handler). This form supports the RTCD (Real Time Call Detail) platform and the STS-I External Echo Cancellation features. For more information on these features, see Division 2, Section 4a245 and Division 2, Section 9P respectively.

1.1 Recent Change View

The corresponding Recent Change View for this form is 19.21.

2. FORM AND RECORD ENTRIES

2.1 BASE AND CONTROL, ESS UNIT

Enter the Base and Control Number and the Office Name on each record.

2.2 * SM

Description: The SM field is used to specify the switching module number.

Required Field.
Valid Entries: 1 - 192

Data Rules:

For 5E12 and later:

- When the ENETLINK form tuple is entered, a corresponding ENETPIPE form tuple must exist with the same SERV TYPE.
- Only one ENETLINK form tuple is allowed where SERV TYPE is equal "RTCD".

2.3 * ENET PIPE

Description: The ENET PIPE field is used to specify the number of the external ethernet pipe.

Required Field.
Default: 0
Valid Entries: 0

2.4 * ENET LINK NBR

Description: The ENET LINK NBR field is used to specify the external ethernet link number.

Required Field.
Default: 0
Valid Entries: 0 - 69

Copyright © 2006 Lucent Technologies

Data Rules:

For 5E12 and later, when RTCD OFC on the OFCOPT form is set to "Y", ENET LINK NBR 0 must be defined on an ENETLINK form where SERV TYPE is equal "RTCD".

For 5E13 and later, when ENET LINK NBR is an odd number other than 1, ENET LINK NBR 1 must exist.

2.5 MH

Description: The MH field is used to specify the message handler number.
Default: 2
Valid Entries: 2

2.6 # SERV TYPE

Description: The SERV TYPE field is used to specify the ethernet link service type.

Required Field.
Default: RTCD
Valid Entries:

5E14 and earlier: EEC (External Echo Canceler) or RTCD (Real Time Call Detail)

5E15 and later: EEC, RTCD, or VTOA (Voice Telephony Over ATM (Asynchronous Transfer Mode))

For 5E20 and later: OMP (Operations, Maintenance and Administration Platform)

Data Rules:

For 5E13 and later:

SERV TYPE must equal SERV TYPE on the ENETPIPE form.

When SERV TYPE is "RTCD":

- ENET LINK NBR must be "0".
- HW ADDR 0 SIDE 0 and HW ADDR 0 SIDE 1 must be the same.
- HW ADDR 1 SIDE 0 and HW ADDR 1 SIDE 1 must be the same.
- HW ADDR 0 SIDE 0 and HW ADDR 1 SIDE 0 must be different.
- DUPLEX must be the same value as DUPLEX HUB on the ENETPIPE form.

When SERV TYPE is "EEC":

- SND PORT and RCV PORT must be "1500".
- DUPLEX must be "N".
- IP ADDR 0 SIDE 0 element 4 and IP ADDR 0 SIDE 1 element 4 must equal ENET LINK NBR plus 150.

Copyright © 2006 Lucent Technologies

- DUPLEX must be the same as DUPLEX HUB on the ENETPIPE form.
- HW ADDR 0 SIDE 0 and HW ADDR 0 SIDE 1 must be the same.
- HW ADDR 1 SIDE 0 and HW ADDR 1 SIDE 1 must be the same.
- HW ADDR 0 SIDE 0 and HW ADDR 1 SIDE 0 must be different.

For 5E15 and later, when SERV TYPE is "VTOA", ENET LINK NBR must be "0 - 5".

For 5E16 and later:

When SERV TYPE is "CFS", ENET LINK NBR must be "0".

When SERV TYPE is "CFS", IP ADDR 0 SIDE 0 and IP ADDR 1 SIDE 0 must be entered.

When SERV TYPE is "CFS", IP ADDR 0 SIDE 1 and IP ADDR 1 SIDE 1 must be entered.

For 5E20 and later:

When SERV TYPE is "OMP":

ENET LINK NBR must be 0.

GATEWAY IP ADDRESS SIDE 0 must be entered.

GATEWAY IP ADDRESS SIDE 1 must not be entered.

GATEWAY NET MASK SIDE 0 and GATEWAY NET MASK SIDE 1 must be equal.

SIDE 0 IP ADDR 0 ans SIDE 1 IP ADDR 0 must be entered.

SIDE 0 IP ADDR 0 ans SIDE 1 IP ADDR 0 must be equal.

SIDE 0 IP ADDR 1 and SIDE 1 IP ADDR 1 must not be entered.

SIDE 0 HW ADDR 1 and SIDE 1 HW ADDR 1 must not be entered.

REMOTE LOGIN must be entered.

The ACT field for SFID 776 on the SFSYS form (5731-1 Record) must be "Y".

UNIT TYPE on the EQIM form (5700 Record) must be "SM2000", "SM2005", or "SMU6".

Only one ENETLINK form tuple is allowed per office.

When SERV TYPE is not "OMP":

GATEWAY IP ADDR SIDE 0 and GATEWAY IP ADDR SIDE 1 must not be entered.

GATEWAY NET MASK SIDE 0 and GATEWAY NET MASK SIDE 1 must not be entered.

IP ADDR 0 SIDE 1 and IP ADDR 1 SIDE 1 must be entered.

Copyright © 2006 Lucent Technologies

HW ADDR 0 SIDE 1 and HW ADDR 1 SIDE 1 must be entered.

HW ADDR 1 SIDE 0 must be entered.

HW ADDR 0 SIDE 0 must not be 00:00:00:00:00:00.

HW ADDR 0 SIDE 1 must not be 00:00:00:00:00:00.

When there are no ENETLINK form tuples where SERV TYPE is "OMP", ENHANCED BUFF on the OFCOPT form (5509 Record) must be "N".

When CM VINTAGE on the EQCORE form (5701 Record) is 2 and any ENETLINK form tuple exixts where SERV TYPE is "OMP", for each EQIM form (5700 Record) with an SM2000 class processor, two EQPIPE forms (5544 Record) must also exist where QLPS NETWORK is 0 and 1.

2.7 DUPLEX

Description: The DUPLEX field is used to indicate if the far end system associated with this ethernet link is duplex or simplex.

2.8 SND PORT

Description: The SND PORT field is the starting port from which data will be transmitted to the far end system.

2.9 RCV PORT

Description: The RCV PORT field is the starting port from which data will be received from the far end system.

2.10 NUM PORTS

Description: The NUM PORTS field is the number of consecutive send and receive ports.

2.11 # IP ADDR 0 SIDE 0

Description: The IP ADDR 0 SIDE 0 field is the first internet protocol address for side 0 to which the ethernet interface board (EIB) transmits and on which the far end receives.

2.12 # IP ADDR 1 SIDE 0

Description: The IP ADDR 1 SIDE 0 field is the second internet protocol address for side 0 to which the ethernet interface board (EIB) transmits and on which the far end receives.

2.13 HW ADDR 0 SIDE 0

Description: The HW ADDR 0 SIDE 0 field is the first ethernet hardware address for side 0 of this ethernet link.

Required Field.
Valid Entries: 00 - ff hex

Copyright © 2006 Lucent Technologies

Data Rules:

HW ADDR 0 SIDE 0 and HW ADDR 0 SIDE 1 must have the same values.

HW ADDR 0 SIDE 0 and HW ADDR 1 SIDE 0 must not have the same values.

HW ADDR 0 SIDE 0 and HW ADDR 0 SIDE 1 must be the same for this SERV TYPE.

2.14 HW ADDR 1 SIDE 0

Description: The HW ADDR 1 SIDE 0 field is the second ethernet hardware address for side 0 of this ethernet link.

Required Field.
Valid Entries: 00 - ff hex

Data Rules:

HW ADDR 1 SIDE 0 and HW ADDR 1 SIDE 1 must have the same values for this SERV TYPE.

2.15 IP ADDR 0 SIDE 1

Description: The IP ADDR 0 SIDE 1 field is the first internet protocol address for side 1 to which the ethernet interface board (EIB) transmits and on which the far end receives.

2.16 IP ADDR 1 SIDE 1

Description: The IP ADDR 1 SIDE 1 field is the second internet protocol address for side 0 to which the ethernet interface board (EIB) transmits and on which the far end receives.

2.17 HW ADDR 0 SIDE 1

Description: The HW ADDR 0 SIDE 1 field is the first ethernet hardware address for side 1 of this ethernet link.

Required Field.
Valid Entries: 00 - ff hex

2.18 HW ADDR 1 SIDE 1

Description: The HW ADDR 1 SIDE 1 field is the second ethernet hardware address for side 1 of this ethernet link.

Required Field.
Valid Entries: 00 - ff hex

2.19 GATEWAY IP ADDR SIDE 0

Description: The GATEWAY IP (Internet Protocol) ADDR 0 field specifies the IP address of the gateway through which data is sent to the destination.

Software Release: 5E20(1) and later
Valid Entries: 0 - 255 for eash element

Copyright © 2006 Lucent Technologies

2.20 GATEWAY NET MASK SIDE 0

Description: This field specifies the subnetwork mask associated with the IP address.

Software Release: 5E20(1) and later
Valid Entries: 0 - 255 for eash element

2.21 GATEWAY IP ADDR SIDE 1

Description: This field specifies the IP address of the gateway through which data is sent to the destination.

Software Release: 5E20(1) and later
Valid Entries: 0 - 255 for eash element

2.22 GATEWAY NET MASK SIDE 1

Description: This field specifies the subnetwork mask associated with the IP address.

Software Release: 5E20(1) and later
Valid Entries: 0 - 255 for eash element

2.23 REMOTE LOGIN

Description: This field is used to specify the OMP User IDor Login.

Software Release: 5E20(1) and later
Valid Entries: Enter up to 25 characters

```
enetlink                          5ESS SWITCH            _
                           OFFICE DATA ADMINISTRATION
(5827-1/2)                  ETHERNET LINK ASSIGNMENT

*1. SM            ___
*2. ENET PIPE     0                SND PORT  _____
*3. ENET LINK NBR __               RCV PORT  _____
    MH            2                NUM PORTS 1
#5. SERV TYPE     ____
    DUPLEX        Y

                     SIDE 0                        SIDE 1
    IP ADDR 0      ___.011.200.___              ___.011.___.___
    IP ADDR 1      ___.011.___.___              ___.011.201.___
    HW ADDR 0 #20. __:__:__:__:__:__        #44. __:__:__:__:__:__
    HW ADDR 1 #27. __:__:__:__:__:__        #51. __:__:__:__:__:__
```

Figure 1 SAMPLE ENETLINK FORM 5E15 SOFTWARE RELEASE

```
enetlink                          5ESS SWITCH            _
                           OFFICE DATA ADMINISTRATION
```

```
(5827-1/2)                 ETHERNET LINK ASSIGNMENT

*1. SM            ___
*2. ENET PIPE     0                SND PORT  _____
*3. ENET LINK NBR __               RCV PORT  _____
    MH            2                NUM PORTS 1
#5. SERV TYPE     ____
    DUPLEX        Y

                    SIDE 0                        SIDE 1
    IP ADDR 0  10. ___.___.___.___          34. ___.___.___.___
    IP ADDR 1  15. ___.___.___.___          39. ___.___.___.___
    HW ADDR 0 #20. __:__:__:__:__:__       #44. __:__:__:__:__:__
    HW ADDR 1 #27. __:__:__:__:__:__       #51. __:__:__:__:__:__
```

Figure 2 SAMPLE ENETLINK FORM 5E16 THROUGH 5E19 SOFTWARE RELEASES

```
Screen 1 of 2                     5ESS SWITCH
enetlink                 OFFICE DATA ADMINISTRATION
(5827-1/2)                 ETHERNET LINK ASSIGNMENT

*1. SM            ___
*2. ENET PIPE     0                SND PORT  _____
*3. ENET LINK NBR __               RCV PORT  _____
    MH            2                NUM PORTS 1
#5. SERV TYPE     ____
    DUPLEX        Y

                    SIDE 0                        SIDE 1
    IP ADDR 0 #10. ___.___.___.___          34.  ___.___.___.___
    IP ADDR 1 #15. ___.___.___.___          39.  ___.___.___.___
    HW ADDR 0 20.  __:__:__:__:__:__        44.  __:__:__:__:__:__
    HW ADDR 1 27.  __:__:__:__:__:__        51.  __:__:__:__:__:__
```

```
Screen 2 of 2                     5ESS SWITCH            _
enetlink                 OFFICE DATA ADMINISTRATION
(5827-1/2)                 ETHERNET LINK ASSIGNMENT
                    SIDE 0
    GATEWAY IP ADDR  58.  ___.___.___.___
    GATEWAY NET MASK 63.  ___.___.___.___

                    SIDE 1
    GATEWAY IP ADDR  68.  ___.___.___.___
    GATEWAY NET MASK 73.  ___.___.___.___
```

Copyright © 2006 Lucent Technologies

```
REMOTE LOGIN    78.  ___________________________
```

Figure 3 SAMPLE ENETLINK FORM 5E20 AND LATER SOFTWARE RELEASES

Copyright © 2006 Lucent Technologies

SEC. 68: 5861 RECORD
DNUS TO EEC EQUIPAGE - DNU2EEC

1. GENERAL

The 5861 Record is available with the 5E13 and later Software Releases. It allows the craft to associate an STS (Synchronous Transport Signal) on DNU-S (Digital Network Unit - SONET) with an Ethernet Link and to activate echo cancellation on packs in the connected Neptune.

1.1 Recent Change View

The corresponding Recent Change View for this form is 19.22.

2. FORM AND RECORD ENTRIES

2.1 BASE AND CONTROL, ESS UNIT

Enter the Base and Control Number and the Office Name on each record.

2.2 * SM

Description: Enter the Switching Module number.

Required Field.
Valid Entries: 1 - 192

Data Rules:

The SM must be defined on an EQIM form.

When SM is entered (DNU2EEC form exist), this SM must be defined as an SM-2000 class processor with EQSTATUS set to "O" (Operational).

When SM USAGE of SM defined on the EQIM form equals "ORM", then ENET SM must have the same value as SM.

2.3 * DNUS

Description: This field is used to specify the DNU-S number.

Required Field.
Valid Entries: 0 - 7

2.4 * DATA GROUP

Description: This field is used to specify the DNU-S data group number.

Required Field.
Valid Entries: 0 or 1

2.5 * STE

Description: This field is used to specify the SONET termination equipment number on the data group.

Copyright © 2006 Lucent Technologies

Required Field.
Valid Entries: 1 - 6

2.6 * STS

Description: This field is used to specify the STS-1 number on the STE (SONET Terminating Equipment) on the DNU-S.

Required Field.
Default: 1
Valid Entries: 1

2.7 # ENET SM

Description: This field is used to specify the Ethernet Link SM (Switching Module) number.

Required Field.
Valid Entries: 1 - 192

Data Rules:

Only one DNU2EEC form tuple can be assigned to an ENET SM, ENET PIPE, ENET LINK NBR, NEPT STS combination.

When ENET SM is entered, the ENET SM must be defined as an SM-2000 class processor with EQSTATUS set to "O" (Operational).

When SM USAGE of ENET SM defined on the EQIM form equals "ORM", then ENET SM must have the same value as SM.

2.8 ENET PIPE

Description: This field is used to specify the External Ethernet Pipe number.
Default: 0

2.9 # ENET LINK NBR

Description: This field is used to specify the External Ethernet Link number.

Required Field.
Valid Entries: even numbers between 0 - 68

2.10 NEPT STS

Description: This field is used to specify the Neptune STS number.
Default: 1

Required Field.
Valid Entries: 1 - 3

2.11 ACTIVE VT GROUPS

Description: This field is used to specify whether echo cancellation is active on the Neptune VT (Virtual

Copyright © 2006 Lucent Technologies

Terminal) group.
Default: N
Valid Entries: Y,N

```
dnu2eec                          5ESS Switch            _
                           OFFICE DATA ADMINISTRATION
(5861)                        DNUS TO EEC EQUIPAGE

*1. SM         ___          10. ACTIVE EEC CIRCUIT PACKS (VT)
*2. DNUS       _
*3. DATA GROUP _         ROW SHELF/SLOT  VT GROUP-MEMBER   ACTIVE
*4. STE        _          1  Upper/01    1-1 2-1 3-1 4-1     N
*5. STS        1          2  Upper/02    5-1 6-1 7-1 1-2     N
                          3  Upper/03    2-2 3-2 4-2 5-2     N
      ENET LINK           4  Upper/04    6-2 7-2 1-3 2-3     N
#6. ENET SM       ___     5  Upper/05    3-3 4-3 5-3 6-3     N
    ENET PIPE     0       6  Upper/06    7-3 1-4 2-4 3-4     N
#8. ENET LINK NBR __      7  Upper/07    4-4 5-4 6-4 7-4     N
 9. NEPT STS      1
```

Figure 1 SAMPLE DNU2EEC FORM 5E13 AND LATER SOFTWARE RELEASES

Copyright © 2006 Lucent Technologies

SEC. 69: 5866 RECORD
TIME MULTIPLEXED SWITCH UNIT - EQTMS

1. GENERAL

The 5866 Record is available with the 5E15 and later Software Releases. It is used to support the CM3 (Communication Module 3) base feature (renamed Global Messaging Server). For more information on this feature, see Division 2, Section 7AN. The TMS data on this form previously existed on the EQCORE form and was moved to this form.

1.1 Recent Change View

The corresponding Recent Change View for this form is 17.11.

2. FORM AND RECORD ENTRIES

2.1 BASE AND CONTROL, ESS UNIT

Enter the Base and Control Number and the Office Name on each record.

2.2 *TMS NBR

Description: The TMS NBR field was changed to TMSFP NUM for 5E16(2) and later. See the TMSFP NUM field below for usage information.

Software Release: 5E15 and later

2.3 * TMSFP NUM

Description: This field contains the TMSFP (Time Multiplex Switch Fabric Pair) number. The TMS NBR field was renamed to TMSFP NUM and modified to expand the range of values to support the CM3 NxTMS (N times TMS) feature. For more information on this feature, see Division 2, Section 7BO.

Software Release: 5E16(2) and later
Default: 0
Valid Entries:

0 for CM2
0 - 3 for CM3

Data Rules:

ODA form EQCORE (5701 Record) must be inserted before this form can be inserted/updated.

An EQTMS form with TMSFP NUM equal to 0 must exist in every office.

When an office has CM2, TMSFP NUM must be 0.

2.4 # AISLE

Description: This field contains the equipment location (floor and aisle) number.

Copyright © 2006 Lucent Technologies

Software Release: 5E15 and later
Required Field.
Valid Entries:
00 - 99 for floor number
00 - 99 for aisle number

2.5 BAY

Description: The BAY field contains the equipment location bay number.

Software Release: 5E15 and later
Valid Entries:

Valid BAY Entries

Office	Entry
CM2	Blank
CM3	0 - 3

Data Rules:

When an office is a CM2 office,

BAY must NOT be entered.

When an office is a CM3 office,

BAY must be entered.

For 5E16(2) and later, BAY must equal TMSFP NUM.

2.6 CAB CONFIG

Description: This field contains the cabinet configuration number.

Software Release: 5E15 and later
Valid Entries:

Valid CAB CONFIG Entries

Office	Entry
CM2	Blank
CM3	F - for front-to-back S - for side-to-side

Data Rules:

When an office is a CM2 office, CAB CONFIG must not be entered.

When an office is a CM3 office, CAB CONFIG must be entered.

2.7 #FABRIC TYPE

Description: This field contains the TMS fabric configuration number.

Software Release: 5E15 and later

Copyright © 2006 Lucent Technologies

Valid Entries:

Valid FABRIC TYPE Entries	
Entry	**Definition**
D	Dual.
S	Single.

Data Rules:

When FABRIC TYPE is "SNGL",

SHELF EQUIPAGE - CM2 SIDE 0 and SIDE 1 for SHELFs 6, and 8-11 can not be entered.

When FABRIC TYPE is "SNGL", and CM VINTAGE on the EQCORE form is 2 and CM2 COMPACT is "N", this combination requires an entry for SHELF 0 in the SHELF EQUIPAGE - CM2 list on this form.

When FABRIC TYPE is "SNGL",

SHELF EQUIPAGE - CM2 SHELF 0 must be entered when 1 or more shelves are equipped.

SHELF EQUIPAGE - CM2 SHELF 1 must be entered when 2 or more shelves are equipped.

SHELF EQUIPAGE - CM2 SHELF 2 must be entered when 3 or more shelves are equipped.

SHELF EQUIPAGE - CM2 SHELF 3 must be entered when 4 or more shelves are equipped.

SHELF EQUIPAGE - CM2 SHELF 4 must be entered when 5 or more shelves are equipped.

SHELF EQUIPAGE - CM2 SHELF 5 must be entered when 6 or more shelves are equipped.

When FABRIC TYPE is "DUAL",

SHELF EQUIPAGE - CM2 SHELF 0 and SHELF 1 must be entered.

SHELF EQUIPAGE - CM2 SHELF 2 and SHELF 3 must be entered when 3 or more shelves are equipped.

SHELF EQUIPAGE - CM2 SHELF 4 and SHELF 5 must be entered when 5 or more shelves are equipped.

SHELF EQUIPAGE - CM2 SHELF 6 and SHELF 7 must be entered when 7 or more shelves are equipped.

SHELF EQUIPAGE - CM2 SHELF 8 and SHELF 9 must be entered when 9 or more shelves are equipped.

SHELF EQUIPAGE - CM2 SHELF 10 and SHELF 11 must be entered when 11 or more shelves are equipped.

When an office is being converted from single fabric to dual fabric, FABRIC TYPE must be "DUAL".

When FABRIC TYPE is "SNGL", the following rules must be met when defining the primary NLI Link, EVEN NLI 0, on the EQNLI form:

Copyright © 2006 Lucent Technologies

- The TMS LINK 0 value assigned to EVEN NLI 0 must be a multiple of 8 when TMS LINK 0 is less than 32 (8, 16, 24).
- The TMS LINK 0 + 2 value assigned to EVEN NLI 0 must be a multiple of 8 when TMS LINK 0 is greater than 31 (38, 46, 54, ...).

When offices are equipped with CM3, FABRIC TYPE must be "DUAL".

When FABRIC TYPE is "SNGL", for each odd QLI board on a given TMS SHELF, the preceeding QLI board must be the same QLI type (i.e., if board 3 on the TMS SHELF 0 is a QLI1, then QLI board 2 on TMS SHELF 0 must be a QLI1.

NOTE: A QLI CLI value of 100 represents a QLI2 board and a QLI CLI value of 0 represents a QLI1 board.

2.8 #CLI

Description: The Change Level Indicator field is used to contain the CLI.

Software Release: 5E15 and later
Required Field.
Valid Entries: 0 - 7FFFFFFF hexadecimal

Data Rules:

When an office is equipped with a CM3, the CLI must be 500.

For 5E15 and later, when the CLI value is 20 (indicates CDX):

- on the EQTMS form (5866 Record)
  - MSG AISLE on the EQCORE form (5701 Record) and AISLE on the EQTMS form must be equal,
  - FABRIC TYPE must be "SNGL", and
  - CDX switches with ORSMs (Optically Remote SMs) may not have a TRCU (Transmission Rate Converter Units Type) of "TRCU3" on the EQCMTRCU form (5812 Record).
- on the EQIM form (5700 Record)
  - CTS EVEN LINK must be 2, 10, 18, 26, 34, 42, 50, or 58.
  - The maximum number of EQIM forms must be less than or equal to 8.
  - The maximum number of EQIM forms with SM USAGE of "IM", "HIM", "TRM" or "ORM" must be less than or equal to 2.
  - The maximum number of EQIM forms with SM USAGE of "RM" must be less than or equal to 6.
- on the EQCORE form (5701 Record)
  - CM VINTAGE must be set to 2 and CM2 COMPACT must be set to "Y".

Copyright © 2006 Lucent Technologies

When CLI has a value in which bit 5 is set (as in 20 hex), then the CM2 COMPACT field on the EQCORE form must be "Y".

SHELF EQUIPAGE - CM3

2.9 EQSTAT

Description: The EQSTAT field provides the equipage status of the shelf.

Software Release: 5E15 and later
Valid Entries:

Valid EQSTAT Entries

Entry	Definition
G	Growth
O	Operational

Data Rules:

EQSTAT must be "G" or "O".

SHELF EQUIPAGE - CM2

The following two fields (Section 2.10 - Section 2.11) are used to enter the shelves and their equipage status.

2.10 SIDE 0

Description: This field describes the shelf equipment for side 0.

Software Release: 5E15 and later.
Valid Entries: TMSU2 or TMSU3

Data Rules:

When SHELF EQUIPAGE - CM2 SIDE 0 or SIDE 1 is assigned, both SIDE 0 and SIDE 1 must be entered.

SHELF EQUIPAGE - CM2 SIDE 0 or SIDE 1 values for SHELF 0, must both be the same, either "TMSU2" or "TMSU3".

SHELF EQUIPAGE - CM2 SIDE 0 or SIDE 1 values for SHELF 1, must both be the same, either "TMSU2" or "TMSU3".

SHELF EQUIPAGE - CM2 SIDE 0 or SIDE 1 values for SHELF 0 and SHELF 1 must all be the same, either "TMSU2" or "TMSU3".

SHELF EQUIPAGE - CM3 entries are not allowed for CM2 offices.

WARNING: SHELF EQUIPAGE - CM2 SIDE 0 or SIDE 1 values for SHELFs 2-11, must both be the same, either "TMSU2" or "TMSU3".

When an office is equipped with CM2, the SHELF EQUIPAGE - CM2 list must have the correct entries to

Copyright © 2006 Lucent Technologies

support the range of TMSLINKS in the office. The following table depicts the rows required for specific ranges of TMSLINKS (STARTING QTMSLINK, QTMSLINK 2, QTMSLINK 3, QTMSLINK4) defined on the EQQLPS form (5854 Record), and a FABRIC TYPE of "DUAL" on the EQTMS form.

SHELF EQUIPAGE - CM2 Row Requirements for "DUAL" FABRIC TYPE

TMSLINKs Equipped	SHELF EQUIPAGE - CM2 (required rows)
2 - 61	1 and 2
62 - 125	3 and 4
126 - 189	5 and 6
190 - 253	7 and 8
254 - 317	9 and 10
318 - 381	11 and 12

SHELF EQUIPAGE - CM2 Row Requirements for "SNGL" FABRIC TYPE

TMS LINKs EQUIPPED	SHELF EQUIPAGE - CM2 (required rows
2 - 31	1
32 - 61	2
62 - 93	3
94 - 125	4
126 - 157	5
158 - 189	6

When an office is equipped with CM2 and the FABRIC TYPE is "SNGL", the maximum assigned NCT EVEN LINK value on an EQIM form (5700 Record) should not exceed 188.

2.11 SIDE 1

Description: This field describes the shelf equipment for side 1.

Software Release: 5E15 and later
Valid Entries: TMSU2 or TMSU3

```
eqtms                              5ESS Switch
SCREEN 1 OF 2              OFFICE DATA ADMINISTRATION
(5866)                    Time Multiplexed Switch Unit

*1. TMS NBR     0           7. SHELF EQUIPAGE - CM3
#2. AISLE       0000        ROW SHELF EQSTAT
 3. BAY         ___          1    0     O
 4. CAB CONFIG  _            2    1     _
#5. FABRIC TYPE DUAL         3    2     _
#6. CLI         00000500     4    3     _
```

```
eqtms                              5ESS Switch            _
SCREEN 2 OF 2              OFFICE DATA ADMINISTRATION
(5866)                    Time Multiplexed Switch Unit
```

```
         10. SHELF EQUIPAGE - CM2
ROW SHELF SIDE0 SIDE1 ROW SHELF SIDE0 SIDE1
 1    0   _____ _____   7    6  _____ _____
 2    1   _____ _____   8    7  _____ _____
 3    2   _____ _____   9    8  _____ _____
 4    3   _____ _____  10    9  _____ _____
 5    4   _____ _____  11   10  _____ _____
 6    5   _____ _____  12   11  _____ _____
```

Figure 1 SAMPLE EQTMS FORM 5E15 SOFTWARE RELEASE

```
eqtms                              5ESS Switch
SCREEN 1 OF 2              OFFICE DATA ADMINISTRATION
(5866)                    Time Multiplexed Switch Unit

*1. TMSFP NUM   0           7. SHELF EQUIPAGE - CM3
#2. AISLE       ____        ROW SHELF EQSTAT
 3. BAY         __           1    0     _
 4. CAB CONFIG  _            2    1     _
#5. FABRIC TYPE ____         3    2     _
#6. CLI         ________     4    3     _
```

```
eqtms                              5ESS Switch            _
SCREEN 2 OF 2              OFFICE DATA ADMINISTRATION
(5866)                    Time Multiplexed Switch Unit

         10. SHELF EQUIPAGE - CM2
ROW SHELF SIDE0 SIDE1 ROW SHELF SIDE0 SIDE1
 1    0   _____ _____   7    6  _____ _____
 2    1   _____ _____   8    7  _____ _____
 3    2   _____ _____   9    8  _____ _____
 4    3   _____ _____  10    9  _____ _____
 5    4   _____ _____  11   10  _____ _____
 6    5   _____ _____  12   11  _____ _____
```

Figure 2 SAMPLE EQTMS FORM 5E16(2) AND LATER SOFTWARE RELEASES

Copyright © 2006 Lucent Technologies

SEC. 70: 5828 RECORD
QPH PIPE ASSIGNMENT - QPHPIPE

1. GENERAL

The 5828 Record is available with the 5E14 and later Software Releases. It provides the basic description of the SM (Switching Module) side of the QLPS (Quad-Link Packet Switch) pipe connecting the QPH (QLPS Protocol Handler) to the QLPS network.This form was created to support the SS7 (Signaling System 7) - PSU (Packet Switch Unit) Architectural Enhancements (99-CP-4246). For more information on this feature, see Division 2, Section 7AG.

1.1 Recent Change View

The corresponding Recent Change View for this form is 17.24.

2. FORM AND RECORD ENTRIES

2.1 BASE AND CONTROL, ESS UNIT

Enter the Base and Control Number and the Office Name on each record.

2.2 * GLOBAL SM

Description: This GLOBAL SM field is used to specify a GSM (Global Switching Module) number which supports national SS7 signaling.

Software Release: 5E14 and later
Required Field.
Valid Entries: 1 - 192

Data Rules:

Each GLOBAL SM, PSU SHELF, and CHANNEL GROUP that is entered defines a QPH on a QLPH NETWORK. Both QLPS NETWORK 0 and QLPS NETWORK 1 combined can have at the most 16 unique QPHs defined on one GLOBAL SM.

There can be a maximum of 59 QPHs in an office.

When SERVICE TYPE is "CCS" on the QPHPIPE form, GLOBAL SM must be defined on the CCGSM form and the EQIM form must have an SM2000 class processor with the EQSTATUS set to "O" and the SM USAGE set to "IM" , "HIM", "ORM", or "TRM".

When GLOBAL SM, PSU SHELF, CHANNEL GROUP, and PH TYPE are entered, the values must be equal to the SM, PSU SHELF, CHANNEL GROUPS GRP TYPE, and CHANNEL GROUPS PH TYPE on the PSUGP form, respectively.

The QPHPIPE form and/or CMTMH form cannot be entered for a VCDX office when VCDX OFFICE is set to "Y" on the EQCORE form.

Each ISCN entry must have the SHELF value (the first character of the ISCN) assigned on an EQPSUPH form (5742 Record) on the same SM and have a matching PSU SHELF.

2.3 * PSU SHELF

Copyright © 2006 Lucent Technologies

Description: This PSU SHELF field is used to specify the PSU (Packet Switch Unit) shelf position on the SM (Switching Module) which supports national SS7 Signaling.

Required Field.
Valid Entries: 0 - 4

2.4 * CHANNEL GROUP

Description: This CHANNEL GROUP field is used to specify the logical port position of the PH (Protocol Handler).

Required Field.
Valid Entries: 0 - 15

2.5 * QLPS NETWORK

Description: This QLPS NETWORK field is used to specify the QLPS Network number.

Required Field.
Valid Entries: 0 or 1

2.6 PH TYPE

Description: This PH TYPE field is used to display the Protocol Handler Type.

Required Field.
Default: PH22
Valid Entries: PH22, PH33

Data Rules:

When DEMO on the SIPGSM form is set to "Y, "PH TYPE and SERVICE TYPE fields on this form are not allowed for SIP-T GSMs .

2.7 SERVICE TYPE

Description: This field is the Quad-Link Packet Switch Service Type used to distinguish between CCS (Common Channel Signaling) and SIP. This field supports the SIP (Session Initiation Protocol) for Packet Trunking feature. For more information see Division 2, Section 4A684.

Required Field.

Software Release: 5E16(2) FR 3 and later
Default: CCS
Valid Entries:

Valid SERVICE TYPE Entries

Entry	Definition
CCS	Common Channel Signaling
SIPT	Session Initiation Protocol for Telephones

Data Rules:

When SERVICE TYPE is "SIPT", GLOBAL SM must be defined on the SIPGSM and QGCON forms

Copyright © 2006 Lucent Technologies

(5880/5829 Records).

```
qphpipe                          5ESS Switch            _
                           OFFICE DATA ADMINISTRATION
(5828)                         QPH PIPE ASSIGNMENT

*1. GLOBAL SM     001
*2. PSU SHELF     1
*3. CHANNEL GROUP 1
*4. QLPS NETWORK  1
 5. PH TYPE       PH22
```

Figure 1 SAMPLE QPHPIPE FORM 5E14 THROUTH 5E16(1) SOFTWARE RELEASES

```
qphpipe                          5ESS Switch            _
                           OFFICE DATA ADMINISTRATION
(5828)                         QPH PIPE ASSIGNMENT

*1. GLOBAL SM     001
*2. PSU SHELF     1
*3. CHANNEL GROUP 1
*4. QLPS NETWORK  1
    PH TYPE       PH22
 6. SERVICE TYPE  CCS
```

Figure 2 SAMPLE QPHPIPE FORM 5E16(2) AND LATER SOFTWARE RELEASES

Copyright © 2006 Lucent Technologies

SEC. 71: 5867 RECORD
COMMUNICATION MODULE MODEL 3 - CM3

1. GENERAL

The 5867 Record is available with the 5E15 and later Software Releases. It is used to assist in the population of CM3 (Communication Module Model 3) - dependent data on other forms. This form is populated in CM3 offices only. It supports the CM3 Base feature. For more information on this feature, see Division 2, Section 7AN.

NOTE: This form should only be used for CM3 offices. It should be entered only after the EQCORE form (5866 Record) so that form level checking can be performed on the data ranges instead of during the time of level 3 checking.

1.1 Recent Change View

This form does not have a corresponding Recent Change View.

2. FORM AND RECORD ENTRIES

2.1 BASE AND CONTROL, ESS UNIT

Enter the Base and Control Number and the Office Name on each record.

2.2 * EQSTAT

Description: The EQSTAT field provides the equipage status of the CM3.

Software Release: 5E15 and later
Required Field.
Default: O
Valid Entries: O

Data Rules:

EQSTAT can only be "O".

```
eqcm3                          5ESS Switch          _
                         OFFICE DATA ADMINISTRATION
(5867)                  Communication Module Model 3

*1. EQSTAT O
```

Figure 1 SAMPLE EQTMS FORM 5E15 AND LATER SOFTWARE RELEASES

Copyright © 2006 Lucent Technologies

SEC. 72: 5868 RECORD
PCT DATA EXCHANGER UNIT - EQPDXU

1. GENERAL

The 5868 Record is available with the 5E14 Software Release. It is used to define the PDXU (PCT (Peripheral Control and Timing) Data Exchanger Unit). This form was added to support the XAIU (Multiplexed Access Interface Unit) feature. For further information on this feature, see Division 2, Section 9T.

1.1 Recent Change View

The corresponding Recent Change View for this form is 19.23.

2. FORM AND RECORD ENTRIES

2.1 BASE AND CONTROL, ESS UNIT

Enter the Base and Control Number and the Office Name on each record.

2.2 * SM

Description: This field is used to specify the SM (Switching Module) to which the PDXU is connected.

Required Field.

Software Release: 5E14 and later
Valid Entries: 1 - 192

Data Rules:

For each SM assignment, there must be a corresponding EQIM form (5700 Record) that must be an SM-2000 class processor.

When an EQAIU form is assigned to a UNIT TYPE of "SM-2000", a maximum of 43 AIUs can be assigned.

2.3 * PDXU

Description: This field is used to specify the PCT Data Exchanger Unit being used.

Required Field.

Software Release: 5E14 and later
Valid Entries: 0 - 35

2.4 # EQL AISLE

Description: This field is used to specify the aisle number where the PDXU is located.

Required Field.

Software Release: 5E14 and later
Valid Entries: 00 - 99 for Floor, and 00 - 99 for Aisle

Copyright © 2006 Lucent Technologies

2.5 # EQL BAY

Description: This field is used to specify the bay number where the PDXU is located.

Required Field.

Software Release: 5E14 and later
Valid Entries:

Valid EQL BAY Entries

Entry	Description
0 - 4	SM
0 - 14, 100 - 104, 200 - 208, 999 - 999	SM-2000 Class Processor.

2.6 EQL UNVER

Description: This field is used to specify the vertical position number where the PDXU is located.

Required Field.

Software Release: 5E14 and later
Default: 11
Valid Entries: 11

2.7 # XAIU CONFIG

Description: This field is used to specify the Traffic Configuration supported by the PDXU.

Required Field.

Software Release: 5E14 and later
Valid Entries:

XAIU Configuration Table

Configuration	Fiber Link	AIUs/ Cabinet	Line Concentration	Call Volume
Low traffic 5E14 and later	Two half-PCTs	6	approx. 5:1	7 CCS or less
Medium 1 (Option 2) traffic 5E14 FR 6, 5E15 FR2 and later 99-5E-7727	Two half-PCTs	4	approx. 3.3:1	12 CCS or less
Medium (Option 1) traffic 5E14 FR3, 5E15 BMI and later 99-5E-7726	Two full PCTs	6	approx. 2.5:1	14 CCS or less
High traffic 5E14 and later	Two full PCTs	4	approx. 1.7:1	21 CCS or less

Data Rules:

For the 5E14 Software Release:

Copyright © 2006 Lucent Technologies

When XAIU CONFIG is "LOW", PCTDX0.TSI BOARD and PCTDX0.TSI SLOT must equal PCTDX1.TSI BOARD and PCTDX1.TSI SLOT, respectively.

When XAIU CONFIG is not "LOW", PCTDX0.TSI BOARD and PCTDX0.TSI SLOT must not equal PCTDX1.TSI BOARD and PCTDX1.TSI SLOT, respectively.

For the 5E14 Feature Releases and later:

When XAIU CONFIG is "LOW" or "MED1", PCTDX0.TSI BOARD and PCTDX0.TSI SLOT must equal PCTDX1.TSI BOARD and PCTDX1.TSI SLOT, respectively.

When XAIU CONFIG is "MED" or "HIGH", PCTDX0.TSI BOARD and PCTDX0.TSI SLOT must NOT equal PCTDX1.TSI BOARD and PCTDX1.TSI SLOT, respectively.

2.8 LINK CAPACITY

Description: This field is used to identify whether the PDXU is at its FULL or HALF traffic capacity. This is a display only field.

Software Release: 5E14 and later
Valid Entries: HALF or FULL

PCTDX0

2.9 # EQSTAT

Description: This field is used to define the Equipment Status of PCTDX0.

Software Release: 5E14 and later
Required Field.
Default: O
Valid Entries:

Valid EQSTAT Entries

Entry	Description
G	Growth.
O	Operational.
U	Unequipped.

Data Rules:

When PCTDX1 EQSTAT is "O", PCTDX0 EQSTAT must be "O".

When EQSTAT is entered, CLI, TSI BOARD, and TSI SLOT must all be entered.

When EQSTAT is not entered, CLI, TSI BOARD, and TSI SLOT must not be entered.

2.10 # CLI

Description: This field is used to specify the change level indicator of the PCTDX0. This indicator is used by diagnostics to determine the associated circuit board.

Required Field.

Copyright © 2006 Lucent Technologies

Software Release: 5E14 and later
Valid Entries: 0, 1, or 80000000 hexadecimal

Data Rules:

When the CLI value for PCTDX0 and PCTDX1 is entered, the CLI value must be 00000000.

2.11 # TSI BOARD

Description: This field is used to specify the Time Slot Interchanger board number.

Required Field.

Software Release: 5E14 and later
Valid Entries: 1 - 9

Data Rules:

Each PCTDX0 TSI BOARD entered must be defined on the EQTSI form and the matching EQSTI form must have an EQSTAT value that is greater than or equal to the PCTDX0 EQSTAT defined on the EQPDXU form.

2.12 # TSI SLOT

Description: This field is used to specify the Time Slot Interchanger slot number.

Required Field.

Software Release: 5E14 and later
Valid Entries: 0 - 3

PCTDX1

2.13 EQSTAT

Description: This field is used to define the Equipment Status of PCTDX0.

Software Release: 5E14 and later
Default: O
Valid Entries:

Valid EQSTAT Entries

Entry	Description
Blank	No Value
G	Growth.
O	Operational.
U	Unequipped.

Data Rules:

When PCTDX1 EQSTAT is "G", PCTDX0 EQSTAT must be "G" or "O".

2.14 CLI

Description: This field is used to specify the change level indicator of the PCTDX0. This indicator is used by diagnostics to determine the associated circuit board.

Copyright © 2006 Lucent Technologies

Software Release: 5E14 and later
Valid Entries: 0, 1, or 80000000 hexadecimal

2.15 TSI BOARD

Description: This field is used to specify the Time Slot Interchanger board number.

Software Release: 5E14 and later
Valid Entries: Blank, or 1 - 9

Data Rules:

Each PCTDX1 TSI BOARD entered must be defined on the EQTSI form and the matching EQSTI form must have an EQSTAT value that is greater than or equal to the PCTDX0 EQSTAT defined on the EQPDXU form.

2.16 TSI SLOT

Description: This field is used to specify the Time Slot Interchanger slot number.

Software Release: 5E14 and later
Valid Entries: Blank, or 0 - 3

```
eqpdxu                          5ESS Switch            _
                         OFFICE DATA ADMINISTRATION
(5868)                     PCT DATA EXCHANGER UNIT

*1. SM            ___          PCTDX0                     PCTDX1
*2. PDXU          __       #9. EQSTAT    _           14. EQSTAT    _
#3. EQL AISLE     ____    #10. CLI       ________    15. CLI       ________
#4. EQL BAY       ___     #11. TSI BOARD _           16. TSI BOARD _
 5. EQL UNVER     11      #12. TSI SLOT  _           17. TSI SLOT  _
#6. XAIU CONFIG   ____
    LINK CAPACITY ____
```

Figure 1 SAMPLE EQPDXU FORM 5E14 AND LATER SOFTWARE RELEASES

Copyright © 2006 Lucent Technologies

SEC. 73: 5869 RECORD
PCT LINE/TRUNK UNIT- EQPLTU

1. GENERAL

1.1 PCT Line/Trunk Unit

The PCT (Peripheral Control and Timing) Line/Trunk form is used to define equipment location information for the PCT line/trunk units. This form was created to support the MSM (Multi Service Module) on PLTU (PCT Line and Trunk (virtual) Unit. For more information on this feature see Division 2, Section 7AP. This feature was first made available in the 5E15 software release.

1.2 Recent Change View

The corresponding Recent Change View for EQPLTU is 19.24.

2. FORM ENTRIES - 5869 RECORD

2.1 BASE AND CONTROL, ESS UNIT

Enter the Base and Control Number and Office Name on each record.

2.2 *SM

Description: The SM field is used to indicate the switching module number.
Valid Entries: 1 - 192

Data Rules:

Switching Module assignment(s) can only be assigned to a SM-2000 type processor.

2.3 *PLTU

Description: The PLTU field is used to specify the peripheral control and timing line/trunk unit number.
Valid Entries: 0 - 35

Each PLTU entered must be defined on the EQPCTP form for the same SM.

2.4 TRANSPORT TYPE

Description: The TRANSPORT TYPE field is used to specify the transport equipment type.
Default: PDS
Valid Entries: PDS (Packet Driver Solution)

Data Rules:

When TRANSPORT TYPE is "PDS", TRANSPORT VERPOS must be 15, 29, 32, 44, 49 or 59.

When TRANSPORT TYPE is "PDS", TRANSPORT BAY must be 0-14, 90-99, 100-104, 200-208 or 900-999.

2.5 #TRANSPORT ESM

Description: The TRANSPORT ESM (Equipment Switching Module) field is used to indicate the switching

Copyright © 2006 Lucent Technologies

module of the transport equipment.
Valid Entries: 1-192

Data Rules:

On the EQPLTU form(s) the TRANSPORT ESM must be defined as an SM with an SM-2000 Class Processor on the EQIM form(s).

2.6 #TRANSPORT AISLE

Description: The TRANSPORT AISLE is used to specify the aisle number of the transport equipment.
Valid Entries: Enter floor 00-99 aisle 00-99

2.7 #TRANSPORT BAY

Description: The TRANSPORT BAY is used to specify the bay number of the transport equipment.
Valid Entries: Enter 00 - 14, 90 - 99, 100 - 104, 200 - 208, or 900 - 999

2.8 #TRANSPORT VERPOS

Description: The TRANSPORT VERPOS is used to specify the vertical position number of the transport equipment.
Valid Entries: Enter 15, 29, 32, 44, 49 or 59

```
eqpltu                          5ESS Switch            _
                         OFFICE DATA ADMINISTRATION
(5869)                       PCT LINE/TRUNK UNIT

*1. SM               ___
*2. PLTU             ___
 3. TRANSPORT TYPE   PDS
#4. TRANSPORT ESM    ___
#5. TRANSPORT AISLE  ____
#6. TRANSPORT BAY    ___
#7. TRANSPORT VERPOS __
```

Figure 1 SAMPLE EQPLTU FORM 5E15 AND LATER SOFTWARE RELEASES

Copyright © 2006 Lucent Technologies

SEC. 74: 5870 RECORD
PCT LINK PACK- EQPCTP

1. GENERAL

1.1 PCT Link Pack

The PCT (Peripheral Control and Timing) Link Pack form provides the PCT Link Pack information. This form was created to support the MSM (Multi Service Module) on PLTU (PCT Line and Trunk (virtual) Unit. For more information on this feature, see Division 2, Section 7AP. This feature was first made available in the 5E15 software release.

1.2 Recent Change View

The corresponding Recent Change View for EQPCTP is 20.17.

2. FORM ENTRIES - 5870 RECORD

2.1 BASE AND CONTROL, ESS UNIT

Enter the Base and Control Number and Office Name on each record.

2.2 SM

Description: The SM field is used to indicate the switching module number.
Valid Entries: 1 - 192.

Data Rules:

Switching Module assignment(s) can only be assigned to a SM2000-type processor.

2.3 PLTU

Description: The PLTU field is used to specify the peripheral control and timing line/trunk unit number.
Valid Entries: 0 - 35

Data Rules:

A PLTU entered on the EQPCTP form must be defined on the EQPLTU form for the same Switching Module.

2.4 PCTFI

Description: The PCTFI field is used to specify the peripheral control and timing facility interface number.
Valid Entries: 0 - 2

Data Rules:

On the EQPCTP form there can be no more than 36 PCTFIs created per SM.

PCTFIs must be defined on the EQPCTP form for the same SM and PLTU.

2.5 TSI BOARD

Copyright © 2006 Lucent Technologies

Description: The TSI BOARD field is used to specify the number of the time slot interface board. Description of the field.
Valid Entries: 0 - 9

Each TSI BOARD must be defined on the EQTSI form for the same SM.

2.6 TSI SLOT

Description: The TSI SLOT field is used to specify the number of the time slot interface slot.
Valid Entries: 0 - 3

PCT TERMINAL EQUIPMENT (TE0)

The following fields provide PCT Terminal Equipment attributes for side 0. Refer to Section 2.7 - Section 2.13 for individual field information.

2.7 TE0 EQSTAT

Description: The TE0 EQSTAT field is used to indicate the equipage state of the side 0 PCT terminal equipment.
Valid Entries:

TE1 EQSTAT Entries	
Entry	**Definition**
U	Unequipped.
G	Growth.
O	Operational.

Data Rules:

When either TE0 EQSTAT or TE1 EQSTAT is set to "U", both TE0 EQSTAT and TE1 EQSTAT must be "U".

On the EQPCTP input form, the TE0 EQSTAT and TE1 EQSTAT must be greater than or equal to EQSTAT on the EQPCTT form, (i.e., "O" is greater than "G" which is greater than "U").

2.8 TE0 CLI

Description: The TE0 CLI field is used to specify the change level indicator of the side 0 PCT terminal equipment.
Valid Entries: Enter 0 to 7FFFFFFF.

Data Rules:

TE0 CLI and TE1 CLI must have the same value.

2.9 TE0 TRACE ID

Description: The TE0 TRACE ID field is used to indicate the position of the link at the far end from the side 0 PCT terminal equipment.
Valid Entries: 0 - 15

2.10 TE0 HORIZONTAL

Description: The TE0 HORIZONTAL field is used to specify the horizontal offset in tenths of an inch from the

Copyright © 2006 Lucent Technologies

left side of the side 0 PCT terminal equipment.
Valid Entries: 0 - 255

2.11 TE0 VERTICAL

Description: The TE0 VERTICAL field is used to specify the vertical offset in tenths of an inch from the bottom of the side 0 PCT terminal equipment.
Valid Entries: 0 - 255

2.12 TE0 DEPTH

Description: The TE0 DEPTH field is used to specify the depth offset in inches from the front of the side 0 PCT terminal equipment.
Valid Entries: 0 - 255

2.13 TE0 PACK CODE

Description: The TE0 PACK CODE field is used to specify the apparatus code for the pack of the side 0 PCT terminal equipment.
Valid Entries: Enter up to 19 alphanumeric characters.

PCT TERMINAL EQUIPMENT (TE1)

The following fields provide PCT Terminal Equipment attributes for side 1. Refer to Section 2.14 - Section 2.20 for individual field information.

2.14 TE1 EQSTAT

Description: The TE1 EQSTAT field is used to indicate the equipage state of the side 1 PCT terminal equipment.
Valid Entries:

TE1 EQSTAT Entries

Entry	Definition
U	Unequipped.
G	Growth.
O	Operational.

2.15 TE1 CLI

Description: The TE1 CLI field is used to specify the change level indicator of the side 1 PCT terminal equipment.
Valid Entries: Enter 0 to 7FFFFFFF.

Data Rules:

TE0 CLI and TE1 CLI must have the same value. Insert checks that compare different fields on this form.

2.16 TE1 TRACE ID

Description: The TE1 TRACE ID field is used to indicate the position of the link at the far end from the side 1 PCT terminal equipment.
Valid Entries: 0 - 15

Copyright © 2006 Lucent Technologies

2.17 TE1 HORIZONTAL

Description: The TE1 HORIZONTAL field is used to specify the horizontal offset in tenths of an inch from the left side of the side 1 PCT terminal equipment.
Valid Entries: 0 - 255

2.18 TE1 VERTICAL

Description: The TE1 VERTICAL field is used to specify the vertical offset in tenths of an inch from the bottom of the side 1 PCT terminal equipment.
Valid Entries: 0 - 255

2.19 TE1 DEPTH

Description: The TE1 DEPTH field is used to specify the depth offset in inches from the front of the side 0 PCT terminal equipment.
Valid Entries: 0 - 255

2.20 TE1 PACK CODE

Description: The TE1 PACK CODE field is used to specify the apparatus code for the pack of the side 0 PCT terminal equipment.
Valid Entries: Enter up to 19 alphanumeric characters

```
eqpctp                            5ESS Switch            _
                           OFFICE DATA ADMINISTRATION
(5870)                            PCT LINK PACK

 *1. SM        ___                #11. TE0 DEPTH     ___
 *2. PLTU      ___                 12. TE0 PACK CODE _______________
 *3. PCTFI     _
 #4. TSI BOARD _                      PCT TERMINAL EQUIPMENT (TE1)
 #5. TSI SLOT  _                   #13. TE1 EQSTAT     _
                                   #14. TE1 CLI        ________
PCT TERMINAL EQUIPMENT  (TE0)      #15. TE1 TRACE ID   __
 #6. TE0 EQSTAT     _              #16. TE1 HORIZONTAL ___
 #7. TE0 CLI        ________       #17. TE1 VERTICAL   ___
 #8. TE0 TRACE ID   __             #18. TE1 DEPTH      ___
 #9. TE0 HORIZONTAL ___             19. TE1 PACK CODE  _______________
#10. TE0 VERTICAL   ___
```

Figure 1 SAMPLE EQPCTP FORM 5E15 AND LATER SOFTWARE RELEASES

Copyright © 2006 Lucent Technologies

SEC. 75: 5871-1/2 RECORD
PCT LINK TRIBUTARY- EQPCTT

1. GENERAL

1.1 PCT Link Tributary

The PCT Link Tributary form contains PCT Link Tributary information. This form was created to support the MSM (Multi Service Module) on PLTU (PCT Line and Trunk (virtual)) Unit. For more information on this feature see Division 2, Section 7AP. This feature was first made available in the 5E15 software release.

1.2 Recent Change View

The corresponding Recent Change View for EQPCTT is 20.27.

2. FORM ENTRIES - 5871 RECORD

2.1 BASE AND CONTROL, ESS UNIT

Enter the Base and Control Number and Office Name on each record.

2.2 SM

Description: The SM field is used to indicate the switching module number.
Valid Entries: 1 - 192

Data Rules:

Switching Module assignment(s) can only be assigned to a SM-2000 type processor.

2.3 PLTU

Description: The PLTU field is used to specify the peripheral control and timing line/trunk unit number.
Valid Entries: 0 - 35

2.4 PCTFI

Description: The PCTFI field is used to specify the peripheral control and timing facility interface number.
Valid Entries: 0 - 2

Data Rules:

A PCTFI entered on the EQPCTT form must be defined on the EQPCTP form for the same Switching Module and PLTU.

VIRTUAL TRIBUTARIES (1-28)

Brief description of the what the fields in this group are for. Refer to Section 2.5 - Section 2.9 for individual field information.

2.5 TRIBUTARY

Copyright © 2006 Lucent Technologies

Description: The TRIBUTARY field is used to specify the T1 tributary number.
Valid Entries: 1 - 28

Data Rules:

When TRIBUTARY is known, EQSTAT must be entered.

When TRIBUTARY is known, APPLICATION TYPE must be entred.

Duplicate TRIBUTARIES can not be assigned in the TRIBUTARY LIST.

2.6 EQSTAT

Description: The EQSTAT field is used to indicate the equipage state of the T1 tributary.
Valid Entries:

EQSTAT Entries

Entry	Definition
U	Unequipped.
G	Growth.
O	Operational.

2.7 APPLICATION TYPE

Description: The APPLICATION TYPE field is used to indicate the application type of the T1 tributary.
Valid Entries: Enter TRUNK

2.8 FACILITY NAME

Description: The FACILITY NAME field is used to indicate the carrier facility of the T1 tributary.
Valid Entries: Enter up to 25 alphanumeric characters.

2.9 APT ALG

Description: This field is used for the DS1 (Digital Signal Level 1) in APT (Automatic Progression Testing). This field supports the APT Enhancements feature. For information on this feature see, Division 2, Section 2AD.

Software Release: 5E16(2) and later
Valid Entries:

Valid APT ALG Entries

Entry	Definition
1ONLY	Test One Only (test one trunk only on the DS1, independently whether test passes or fails and then move to a trunk on another DS1).
FULL	Full (test all trunks on the DS1, independently whether test passes or fails, and then move to a trunk on another DS1).
NOTST	No Test (APT should not perform any tests on the DS1).
SUCC	Stop on Success (test one trunk on the DS1 and then move to a trunk on another DS1 if test passes, or test next trunk on the same DS1 if test fails).

Data Rules:

APT ALG can only be entered when APPLICATION TYPE is "TRUNK".

Copyright © 2006 Lucent Technologies

```
eqpctt                              5ESS Switch
SCREEN 1 OF 3               OFFICE DATA ADMINISTRATION
(5871)                          PCT LINK TRIBUTARY

*1. SM ___     *2. PLTU ___     *3. PCTFI _

                      4. VIRTUAL TRIBUTARIES
ROW TRIBUTARY EQSTAT APPLICATION TYPE FACILITY NAME
 1     __       _       _________     ___________________________
 2     __       _       _________     ___________________________
 3     __       _       _________     ___________________________
 4     __       _       _________     ___________________________
 5     __       _       _________     ___________________________
 6     __       _       _________     ___________________________
 7     __       _       _________     ___________________________
 8     __       _       _________     ___________________________
```

```
eqpctt                              5ESS Switch
SCREEN 2 OF 3               OFFICE DATA ADMINISTRATION
(5871)                          PCT LINK TRIBUTARY

                      4. VIRTUAL TRIBUTARIES
ROW TRIBUTARY EQSTAT APPLICATION TYPE FACILITY NAME
  9    __       _       _________     ___________________________
 10    __       _       _________     ___________________________
 11    __       _       _________     ___________________________
 12    __       _       _________     ___________________________
 13    __       _       _________     ___________________________
 14    __       _       _________     ___________________________
 15    __       _       _________     ___________________________
 16    __       _       _________     ___________________________
 17    __       _       _________     ___________________________
 18    __       _       _________     ___________________________
```

```
eqpctt                              5ESS Switch            _
SCREEN 3 OF 3               OFFICE DATA ADMINISTRATION
(5871)                          PCT LINK TRIBUTARY

                      4. VIRTUAL TRIBUTARIES
ROW TRIBUTARY EQSTAT APPLICATION TYPE FACILITY NAME
 19    __       _       _________     ___________________________
 20    __       _       _________     ___________________________
 21    __       _       _________     ___________________________
 22    __       _       _________     ___________________________
 23    __       _       _________     ___________________________
 24    __       _       _________     ___________________________
 25    __       _       _________     ___________________________
```

Copyright © 2006 Lucent Technologies

```
 26    __       _       _________     ___________________________
 27    __       _       _________     ___________________________
 28    __       _       _________     ___________________________
```

Figure 1 SAMPLE EQPCTT FORM 5E15 SOFTWARE RELEASE

```
eqpctt                              5ESS Switch
SCREEN 1 OF 3                OFFICE DATA ADMINISTRATION
(5871)                           PCT LINK TRIBUTARY

*1. SM ___    *2. PLTU __    *3. PCTFI _

                  4. VIRTUAL TRIBUTARIES LIST (TRIBLIST)
ROW TRIBUTARY EQSTAT APPLICATION TYPE FACILITY NAME             APT ALG
 1     __       _       _________     ___________________________  _____
 2     __       _       _________     ___________________________  _____
 3     __       _       _________     ___________________________  _____
 4     __       _       _________     ___________________________  _____
 5     __       _       _________     ___________________________  _____
 6     __       _       _________     ___________________________  _____
 7     __       _       _________     ___________________________  _____
 8     __       _       _________     ___________________________  _____
```

```
eqpctt                              5ESS Switch
SCREEN 2 OF 3                OFFICE DATA ADMINISTRATION
(5871)                           PCT LINK TRIBUTARY

                  4. VIRTUAL TRIBUTARIES LIST (TRIBLIST)
ROW TRIBUTARY EQSTAT APPLICATION TYPE FACILITY NAME             APT ALG
  9    __       _       _________     ___________________________  _____
 10    __       _       _________     ___________________________  _____
 11    __       _       _________     ___________________________  _____
 12    __       _       _________     ___________________________  _____
 13    __       _       _________     ___________________________  _____
 14    __       _       _________     ___________________________  _____
 15    __       _       _________     ___________________________  _____
 16    __       _       _________     ___________________________  _____
 17    __       _       _________     ___________________________  _____
 18    __       _       _________     ___________________________  _____
```

```
eqpctt                              5ESS Switch            _
SCREEN 3 OF 3                OFFICE DATA ADMINISTRATION
(5871)                           PCT LINK TRIBUTARY
```

4. VIRTUAL TRIBUTARIES LIST (TRIBLIST)

ROW	TRIBUTARY	EQSTAT	APPLICATION TYPE	FACILITY NAME	APT ALG
19	__	_	_____	_____	_____
20	__	_	_____	_____	_____
21	__	_	_____	_____	_____
22	__	_	_____	_____	_____
23	__	_	_____	_____	_____
24	__	_	_____	_____	_____
25	__	_	_____	_____	_____
26	__	_	_____	_____	_____
27	__	_	_____	_____	_____
28	__	_	_____	_____	_____

Figure 2 SAMPLE EQPCTT FORM 5E16(2) AND LATER SOFTWARE RELEASES

Copyright © 2006 Lucent Technologies

SEC. 78: 5544 RECORD
MH PIPE ASSIGNMENT FORM - EQPIPE

1. GENERAL

The 5544 Record is available with the 5E9(2) and later Software Releases. It is used to assign QLPS (Quad-Link Packet Switch) MH (Message Handler) pipes in an SM-2000 office.

An SM-2000 Message Handler pipe is a high bandwidth path for message transport between a QLPS QTMSLNK (a port connection on the QLPS board of the TMS (Time Multiplex Switch)) and a given QLPS endpoint, that is, an MH (Message Handler) in an SM-2000. It is a physical path that sustains HDLC (High Level Data Link Control) traffic from the QLPS to the MH. When an SM-2000 Message Handler pipe is assigned, the operational software determines what resources are available for the pipe: QTMSLNKs and HDLC channels and timeslots on the QTMSLNKs.

New pipes cannot be assigned during a retrofit.

1.1 Recent Change View

The corresponding Recent Change View for this form is 17.20.

2. FORM AND RECORD ENTRIES

2.1 BASE AND CONTROL, ESS UNIT

Enter the Base and Control Number and the Office Name on each record.

2.2 * QLPS NETWORK

Description: Enter the QLPS Board to which the pipe is assigned.

Required Field.
Valid Entries: 0, 1

Data Rules:

Two EQQLPS forms (5854 Record) must exist for the QLPS NETWORK entered here, one each for ONTC SIDE 0 and ONTC SIDE 1. On both forms EQSTAT must be "O".

For 5E15 and later:

This form can only be used in a non-CM3 office, since all the data for CM3 is handled by forward mapping.

The EQCORE form (5701 Record) must be inserted before this form can be inserted/updated.

2.3 * SM2000 SM

Description: Enter the SM-2000 on which the pipe is being defined.

Required Field.
Valid Entries: 1 - 192

Data Rules:

Copyright © 2006 Lucent Technologies

The SM-2000 must be defined on an EQIM form (5700-1/2 Record) where UNIT TYPE is "SM2000" and EQSTATUS is "O".

Each SM-2000 entered defines a MH Pipe from an SM-2000 class processor Switching Module to a QLPS NETWORK. Similarly, each GLOBAL SM, PSU SHELF, and CHANNEL GROUP combination entered on the QPHPIPE form defines a QPH Pipe from a GSM (Global Switching Module) to a QLPS NETWORK. There is a limit to the number of pipes that can be defined on each QLPS NETWORK. There are 30 available pipes for each TMSLINK (QTMSLINK). There are 4 TMSLINKSs defined on each QLPS NETWORK for a total of 120 pipes for each QLPS NETWORK. Each TMSLINK has a total of 224 timeslots that can be utilized between the 30 pipes defined on that TMSLINK.

```
                                5ESS Switch          _
eqpipe                    OFFICE DATA ADMINISTRATION
(5544)                        MH PIPE ASSIGNMENT


*1. QLPS NETWORK 0
*2. SM2000 SM    007
```

Figure 1 SAMPLE EQPIPE FORM 5E9(2) AND LATER SOFTWARE RELEASES

Copyright © 2006 Lucent Technologies

SEC. 80: 5599 RECORD
CDMA OFFICE OPTIONS - CDMAOPT

1. GENERAL

The 5599 Record is available with the 5E15 and later Software Releases. It is used to control the parameters for the Echo Cancellation for CDMA (Code Division Multiple Access) feature. For more information on this feature, see Division 2, Section 4A552.

WARNING: Echo Cancellation will not be done on PHV1 (Protocol Handler for Voice 1), PHV2, and PHV3.

1.1 Recent Change View

The corresponding Recent Change View for this form is 8.75.

2. FORM AND RECORD ENTRIES

2.1 BASE AND CONTROL, ESS UNIT

Enter the Base and Control Number and the Office Name on each record.

2.2 * KEY

Description: Enter the key value which is always 0.

Software Release: 5E15 and later
Valid Entries: 0

2.3 ECHO CANCELLATION

Description: This field determines whether the echo canceler is active or disabled.

Software Release: 5E15 and later
Required Field.
Default: N
Valid Entries: Y, N

Data Rules:

When ECHO CANCELLATION is "Y", the ACT field for SFID 552 on the SFSYS form (5713-1 Record) must also be set to "Y".

For 5E16 and later, when ECHO CANCELLATION or AC ECHO CTRL is "Y", EVRC IMAGE must be 1 through 3.

WARNING: Electrical Echo Cancellation is not supported on PHV1s, PHV2s, or PHV3s.

2.4 DC REMOVER

Description: The Direct Current removal field determines if filtering is provided on the receive signal (i.e., the signal encoded by the vocoder).

Copyright © 2006 Lucent Technologies

Software Release: 5E15 and later
Required Field.
Default: Y
Valid Entries: Y, N

2.5 NONLINEAR PROC

Description: The NLP (Nonlinear Processor field indicates whether residual echo is removed after adaptive filtering.

Software Release: 5E15 and later
Required Field.
Default: Y
Valid Entries: Y, N

2.6 NLP NOISE FILL

Description: The NLP (Nonlinear Processor) NOISE FILL field indicates the background noise level on the receive side, and inserts a matching noise when the NLP is active.

Software Release: 5E15 and later
Required Field.
Default: Y
Valid Entries: Y, N

2.7 ECHO TAIL LENGTH

Description: This field indicates the maximum tail delay that can be accommodated by the echo canceler. Tail delay is the maximum time taken by the signal to arrive at the receive port once it leaves the transmit port.

Software Release: 5E15 and later
Required Field.
Default: 64
Valid Entries: 16, 32, 48, or 64 ms.

2.8 NLP ACT THRESHOLD

Description: The NLP determines when the decoder output power level is greater than the encoder input power level, by the selected thresholds. This threshold is the NLP activation threshold.

Software Release: 5E15 and later
Required Field.
Default: 19
Valid Entries: 11-16, 18-20, 22, 24, or 26 db.

2.9 AGGR ADAPT RATE

Description: The Aggressive Mode Adaptation Rate indicates the adaptive filter's convergence to the new echo path, when the echo canceler is operating in the fast converging mode at the beginning of a call.

Software Release: 5E15 and later
Required Field.
Default: 16384

Copyright © 2006 Lucent Technologies

Valid Entries: 0 - 16384 step size

AGGR ADAPT RATE must be greater than or equal to NORMAL ADAPT RATE.

2.10 NORMAL ADAPT RATE

Description: The Normal Mode Adaptation Rate indicates the adaptation rate after aggressive mode operation has completed. Best performance is achieved when this value is below 8000.

Software Release: 5E15 and later
Required Field.
Default: 6144
Valid Entries: 0 - 16384

2.11 AGGR MODE DURATION

Description: The Aggressive Mode Duration field indicates the number of samples of filter adaptation from the beginning of a call.

Software Release: 5E15 and later
Required Field.
Default: 3
Valid Entries: 1 - 4

2.12 FORWARD LINK ALC

Description: This field is the Receiver Gain that indicates the gain or loss applied to the encoder input.

Software Release: 5E15 and later
Required Field.
Default: 0
Valid Entries: (-12) - (+12)

2.13 REVERSE LINK ALC

Description: This field is the Transmitter Gain Adjustment that indicates the gain or loss applied to the decoder output.

Software Release: 5E15 and later
Required Field.
Default: 0
Valid Entries: (-12) - (+12)

2.14 HYBRID RET LOSS TH

Description: The ERL (Echo Return Loss) indicates the loss in signal power that occurs in the echo path due to hybrid attenuation.

Software Release: 5E15 and later
Required Field.
Default: 6
Valid Entries: 0 - 10

Copyright © 2006 Lucent Technologies

2.15 MAX NOISE FILL LEVL

Description: The Maximum Nonlinear Processor Noise Fill Level determines the maximum level of noise inserted when the NLP is removing residual echo.

Software Release: 5E15 and later
Required Field.
Default: -39
Valid Entries: (-39) - (-72) in 3 dB increments

EL ECHO CANCELLATION (G.168-2000)

The following fields (Section 2.16 - Section 2.21) provides the ability to distinguish between existing electrical echo cancellations. These fields support the G.168-2000 Compliance and Acoustic Echo Cancellation on PHV5 (Protocol Handler for Voice - Version 5). For more information, see Division 2, Section 4A599.

2.16 NE SPCH DET TH

Description: The NE SPCH DET TH (Near-end speech detector threshold) field indicates the minimum network ERL (Echo Return Loss) needed for the EEC (Electrical Echo Cancellation) to properly converge to the echo path. The threshold is applied to the level difference between the reverse direction (far-end) and forward direction (near-end) signals. The EEC adaptation is frozen when the threshold is exceeded.

Software Release: 5E16 and later
Default: 6
Valid Entries: 0 - 15

2.17 AGGR ADPT RATE

Description: The AGGR ADPT RATE (Aggressive Adaptation Rate) field indicates how quickly the adaptive filter can converge to the new echo path when the canceller is operating in aggressive mode (i.e., the fast convergence mode at the beginning of a call).

Software Release: 5E16 and later
Default: 10
Valid Entries: 0 - 15

Data Rules:

AGGR ADPT RATE must be greater than or equal to NRML ADAPT RATE.

2.18 NRML ADPT RATE

Description: The NRML ADPT RATE (Normal Adaptation Rate) field indicates the adaptation rate after aggressive mode operation has completed.

Software Release: 5E16 and later
Default: 4
Valid Entries: 0 - 15

2.19 AGGR NLP TH

Description: The AGGR NLP TH (Aggressive Nonlinear Processor Threshold) field indicates the power level

Copyright © 2006 Lucent Technologies

difference between the reverse and forward direction signals for activating the NLP (Nonlinear Processor) during aggressive mode.

Software Release: 5E16 and later
Default: 1
Valid Entries: 0 - 15

2.20 NRML NLP TH

Description: The NRML NLP TH (Normal Nonlinear Processor Threshold) field indicates the power level difference between the reverse and forward direction signals for activating the NLP (Nonlinear Processor) after aggressive mode operation has completed.

Software Release: 5E16 and later
Default: 7
Valid Entries: 0 - 15

2.21 DBL-TALK CTRL

Description: The DBL-TALK CTRL (Double-Talk Robustness Control) field indicates aggressiveness of double-talk robustness algorithm.

Software Release: 5E16 and later
Default: 3
Valid Entries: 0 - 15

2.22 PHV6 ECHO PATH DELAY

Description: This field specifies the PHV6 ((Protocol Handler for Voice 6) electrical echo path delay time in milliseconds. This field support the PHV6 feature. For information on this feature see, Division 2, Section 7CD.

Software Release: 5E18(1) and later
Default: 64
Valid Entries: 64 or 128 milliseconds

ACOUSTIC ECHO CANCELLATION

The following fields (Section 2.23 - Section 2.27) supports the G.168-2000 Compliance and Acoustic Echo Cancellation for PHV5 (Protocol Handler for Voice - Version 5) feature. For more information, see Division 2, Section 4A599.

2.23 AC ECHO CTRL

Description: The AC ECHO CTRL (AEC (Acoustic Echo Control)) field indicates whether AEC is active.

Software Release: 5E16 and later
Default: N
Valid Entries: Y, N

Data Rules:

- **WARNING:** Acoustic Echo Cancellation is not supported on PHV1s, PHV2s, PHV3s, or PHV4s.

2.24 REV LINK AGC

Description: The REV LINK AGC (Reverse Link AGC (Automatic Gain Control)) field indicates whether AGC in the reverse direction is active.

Software Release: 5E16 and later
Default: N
Valid Entries: Y, N

2.25 FRWD LINK AGC

Description: The FRWD LINK AGC (Forward Link AGC (Automatic Gain Control)) field indicates whether AGC in the forward direction is active.

Software Release: 5E16 and later
Default: N
Valid Entries: Y, N

2.26 REV LINK NS

Description: The REV LINK NS (Reverse Link NS (Noise Suppression)) field indicates whether NS/NR (Noise Reduction) is active.

Software Release: 5E16 and later
Default: N
Valid Entries: Y, N

2.27 REV LINK NC

Description: The REV LINK NC (Reverse Link NS (Noise Compensation)) field indicates whether NC is active.

Software Release: 5E16 and later
Default: N
Valid Entries: Y, N

PACKET BUS OCCUPANCY

The following fields (Section 2.28 -Section 2.30) provide information that is relevant to the Packet Bus Occupancy Measurements feature. For more information on this feature see, Division 2, Section 1CS.

2.28 PB OCC 1TH

Description: This field indicates the lower threshold of pack bus occupancy and is expressed as a percentage.

Required Field.

Software Release: 5E17.1 FR 1
Default: 70
Valid Entries: 0 - 99

2.29 PB OCC 2TH

Description: This field indicates the higher threshold of pack bus occupancy and is expressed as a percentage.

Copyright © 2006 Lucent Technologies

Required Field.

Software Release: 5E17.1 FR 1
Default: 80
Valid Entries: 1 - 100

Data Rules:

PB OCC 2TH must be greater than PB OCC 1TH.

2.30 PB INT

Description: This field indicates the packet bus sampling interval in milliseconds.

Required Field.

Software Release: 5E17.1 FR 1
Default: 5
Valid Entries: 1, 2, 3, 4, 5, 6, 8, 10, 12, 15, 20, 24, 25, 30, 40, 50, 60, 75, 100, 120, 125, 150, 200, 250, 300, 375, 500, 600, 750, or 1000 in milliseconds.

ISUP

This field supports the CIC (Carrier Identification Code) Routing Solution feature. For more information see, Division 2, Section 2AH.

2.31 SEND CI PARM

Description: This field is used to indicate whether or not the CIC should be sent in the CIC parameter. Required field.

Software Release: 5E17.1 FR 3 and later
Valid Entries: Y, N

REVERSE DTMF

The following fields (Section 2.32 - Section 2.34) provide Reverse DTMF (Dual Tone Multi-Frequency) Tone Programmability and are available with 5E15 and later Software Releases. See Division 2, Section 8B for more information. For 5E13 and 5E14 these fields existed on the OFCOPT form (5509 Record).

2.32 OVERRIDE

Description: Do you want to override the CDMA mobile on/off duration?

When this field is "Y", the mobile on/off duration values can be overriden with the provisioned values in the LENGTH ON and LENGTH OFF fields.

When this field is "N", the mobile on/off duration is not overriden.

Software Release: 5E15 and later
Default: N
Valid Entries: Y, N

Data Rules:

Copyright © 2006 Lucent Technologies

When OVERRIDE is "N", REV LEN ON must not be entered.

When OVERRIDE is "N", REV LEN OFF must not be entered.

When OVERRIDE is "Y", REV LEN ON must be entered.

When OVERRIDE is "Y", REV LEN OFF must be entered.

2.33 REV LEN ON

Description: The REV LEN ON field is used to indicate the DTMF (Dual Tone Multi-Frequency) on duration, in milliseconds, for CDMA.

Software Release: 5E15 and later
Valid Entries: 100, 150, 200, 250, 300, 350 or blank

2.34 REV LEN OFF

Description: The REV LEN OFF field is used to indicate the Dual Tone Multi-Frequency off duration, in milliseconds, for CDMA

Software Release: 5E15 and later
Valid Entries: 50, 100, 150, 200 or blank

EVRC APPLICATION

The following fields (Section 2.35 - Section 2.37) supports the Forward Channel DTMF for CDMA (Code Division Multiple Access) feature for the 5E15 and later Software Releases. For more information, see Division 2, Section 8W.

2.35 EVRC IMAGE

Description: The EVRC (Extended Variable Rate Coder) IMAGE field is used to indicate what CDMA EVRC features are activated.

Software Release: 5E15 and later
Default: 0
Valid Entries:

Valid EVRC IMAGE Entries

Entry	Definition
0	TTY/TDD and FTC DTMF
1	TTY/TDD and EC
2	FTC DTMF and EC

2.36 TTY/TDD ACT

Description: The TTY/TDD ACT field indicates whether or not a TTY/TDD feature is active.

Software Release: 5E15 and later
Default: N
Valid Entries: Y, N

Data Rules:

For 5E16 and later, when TTY/TDD ACT is "Y", EVRC IMAGE must be 0, 1, or 3.

WARNING: TTY/TDD is not supported on PHV1s, PHV2s, or PHV4s.

2.37 PPEE ACT

Description: The PPEE (Packet Pipe Engineering Enhancements) ACT field indicates whether or not the PPEE feature is active. This field was added to support the Packet Pipe Engineering Enhancements feature. This feature increases the number of call legs carried by a packet pipe. (For more information on this feature, see Division 2, Section 4A317.)

Software Release: 5E15 and later
Default: N
Valid Entries: Y, N

Data Rules:

The PPEE ACT field is used by the Packet Pipe Engineering Enhancements secured feature, therefore when this field is set to "Y", the ACT field for SFID 317 on the SFSYS form (5713-1 Record) must also be set to "Y". (For more information on this feature, see Division 2, Section 4A317.)

When the Packet Pipe Engineering Enhancements feature is active for PSUGP forms (5949 Record) representing PH4s which have exceeded their capacity for CDMA trunk routing, the count of Packet Pipe Member trunks assigned to all Packet Pipe trunks which use this PH4 may not exceed 32. However, when no Trunk Groups have been provisioned with a SERV TYPE of "ACELP" or "VSELP", the number of CDMA calls the PH4 can handle may not exceed 84. In addition, only (1) 16-wide PP with 64kb data rate on a FRPH can be 90. Also, when one or more Trunk Groups have been provisioned with a SERV TYPE of "ACELP" or "VSELP", the number of CDMA calls the PH4 can handle may not exceed 90. The number of possible CDMA calls is dependent upon:

the presence of Trunk Group SERV TYPEs of "8K", "13K", "ACELP", "DATA", "EVRC", or "VSELP" in the switch.

the DATA RATE of the Packet Pipe Member Trunks and the number of Packet Pipe Member trunks which point to this PH4. (See Division 2, Section 4A317.)

When the TRUNK form specifies Packet Pipe Trunks associated with PSUGP forms that represent PH4s which have exceeded their capacity for CDMA trunk routing, the first six digits of the TRKOE field on the TRUNK form must match the SM, PSU SHELF, and CHANNEL GROUP fields on the PSUGP form.

2.38 REMOVE PP LIMIT CHK

Description: This field is used to indicated whether or not to remove Packet Pipe limit checks.

Software Release: 5E17 and later
Default: N
Valid Entries: Y, N

Data Rules:

When the ACT field for SFID 259 (indicating a TDMA office) is set to "Y" on the SFSYS form (5713-1 Record), REMOVE PP LIMIT CHK must be set to "N".

Copyright © 2006 Lucent Technologies

FORWARD DTMF

The following fields (Section 2.39 - Section 2.40) supports the Forward Channel DTMF for CDMA (Code Division Multiple Access) feature for the 5E15 and later Software Releases. For more information, see Division 2, Section 8W.

2.39 FWD LEN ON

Description: The FWD LEN ON field indicates the Forward Traffic Channel DTMF on duration, in milliseconds for CDMA.

Software Release: 5E15 and later
Default: 95
Valid Entries: 95, 150, 200, 250, 300 or 350

2.40 FWD LEN OFF

Description: The FWD LEN OFF field indicates the Forward Traffic Channel DTMF off duration, in milliseconds for CDMA.

Software Release: 5E15 and later
Default: 60
Valid Entries: 60, 100, 150 or 200

2.41 SEND VP RDI

Description: The field is used as an indicator for virtual path remote defects

Software Release: 5E17(1) FR1 and later
Required field.
Default: ON
Valid Entries: ON, OFF

2.42 SEND VC RDI

Description: The field is used as an indicator for virtual channel remote defects

Software Release: 5E17(1) FR1 and later
Required field.
Default: ON
Valid Entries: ON, OFF

2.43 SUBNET ID

Description: This field indicates the number of office wide subnetwork identifiers.

Software Release: 5E17(1) FR1 and later
Required field.
Default: 0
Valid Entries: 0 - 3

Data Rules:

Copyright © 2006 Lucent Technologies

For 5E20(1) and later, when SUBNET ID on this form matches with SUBNET on the IPATMRTG form (5896 Record), and SWITCHING MODULE and PSU on the EQPSU form (5741 Record) matches the SM and PSU on the IPATMRTG form, then HIGH and LOW Community Address (CA) must not be entered when COM ADDR (on EQPSU) matches the COMMUNITY ADDRESS ROUTING LIST element.

2.44 PFS OVERRIDE

Description: This field is used for the FS (Frame Selector) DTMF (Dual-Tone Multi-Frequency) Tone Generation Programmability application on the 5ESS. If set to DBYES, then vendors will be allowed to specify the DTMF On and Off durations for FS calls.

Software Release: 5E20(1) and later
Required field.
Default: N
Valid Entries: Y, N

Data Rules:

When PFS OVERRIDE is "Y", PFS REV LEN OFF and PFS REV LEN ON must be entered.

When PFS OVERRIDE is "N", PFS REV LEN OFF and PFS REV LEN ON must not be entered.

What PFS OVERRIDE is ":Y", the ACT field for SFID 775 must also be set to "Y".

2.45 PFS REV LEN ON

Description: This field is used by the FS DTMF Tone Generation Programmability application on the 5ESS. This field specifies the DTMF Tone On Duration for FS calls.

Software Release: 5E20(1) and later
Valid Entries: blank, or 100, 150, 200, 250, 300, 350 in milliseconds.

2.46 PFS REV LEN OFF

Description: This field is used by the FS DTMF Tone Generation Programmability application on the 5ESS. This field specifies the DTMF Tone Off Duration for FS calls

Software Release: 5E20(1) and later
Valid Entries: blank, or 50, 100, 150, 200 in milliseconds.

2.47 IPSHO WARNING THRESHOLD

Description: The IPSHO WARNING THRESHOLD field tells the switch when the warning message will be printed during IPSHO provisioning. If the value [(provisioned IPSHO)/(the purchased IPSHO) * 100) equals or exceeds the IPSHO WARNING THRESHOLD, RC will issue a warning to the ROP (Read Only Printer).

This field defines the IP Soft Handoff Resource Warning Threshold. The threshold represents a percentage and is used to compare the number of IPSHO resources provisioned to the number purchased.

Required Field.

Software Release: 5E20(1) and later
Default: 100
Valid Entries: blank, or 0 - 100 in increments of 10

Copyright © 2006 Lucent Technologies

2.48 PHVDATA WARNING THRESHOLD

Description: The PHVDATA WARNING THRESHOLD is used to determine when the warning message will be printed during data channel provisioning on 5.5. If the value [(provisioned data channels)/(the purchased data channels) * 100] equals or exceeds the PHVDATA WARNING THRESHOLD, RC (Recent Change) will issue a warning to the ROP (Read Only Printer).

Software Release: 5E20(1) and later
Default: 80
Valid Entries: blank or 0 - 100 in increments of 10

2.49 PHVVOICE WARNING THRESHOLD

Description: The PHVVOICE WARNING THRESHOLD is used to determine when the warning message will be printed during voice channel provisioning on 5.5. If the value [(provisioned voice channels)/(the purchased voice channels) * 100] equals or exceeds the PHVVOICE WARNING THRESHOLD, RC will issue a warning to the ROP (Read Only Printer).

Software Release: 5E20(1) and later
Default: 80
Valid Entries: blank or 0 - 100 in increments of 10

```
cdmaopt                          5ESS Switch
SCREEN 1 OF 2             OFFICE DATA ADMINISTRATION
(5599)                        CDMA OFFICE OPTIONS

*1. KEY 0                       12. REVERSE LINK ALC    000
   CDMA TUNING PARAMETERS       13. HYBRID RET LOSS TH  06
 2. ECHO CANCELLATION  N        14. MAX NOISE FILL LEVL -39
 3. DC REMOVER         Y
 4. NONLINEAR PROC     Y
 5. NLP NOISE FILL     Y
 6. ECHO TAIL LENGTH   64
 7. NLP ACT THRESHOLD  19
 8. AGGR ADAPT RATE    16384
 9. NORMAL ADAPT RATE  6144
10. AGGR MODE DURATION 3
11. FORWARD LINK ALC   000
```

```
cdmaopt                          5ESS Switch            _
SCREEN 2 OF 2             OFFICE DATA ADMINISTRATION
(5599)                        CDMA OFFICE OPTIONS
```

```
    REVERSE DTMF           FORWARD DTMF
15. OVERRIDE    N      21. FWD LEN ON  095
16. REV LEN ON  ___    22. FWD LEN OFF 060
17. REV LEN OFF ___

EVRC APPLICATION
18. EVRC IMAGE 0

19. TTY/TDD ACT N
20. PPEE ACT    N
```

Figure 1 SAMPLE CDMAOPT FORM 5E15 SOFTWARE RELEASE

```
cdmaopt                          5ESS Switch
SCREEN 1 OF 3             OFFICE DATA ADMINISTRATION
(5599)                        CDMA OFFICE OPTIONS

*1. KEY 0                       11. FORWARD LINK ALC    000
                                12. REVERSE LINK ALC    000
ELECTRICAL ECHO CANCELLATION    13. HYBRID RET LOSS TH  06
 2. ECHO CANCELLATION  N        14. MAX NOISE FILL LEVL -39
 3. DC REMOVER         Y
 4. NONLINEAR PROC     Y        EL ECHO CANCELLATION (G.168-2000)
 5. NLP NOISE FILL     Y        15. NE SPCH DET TH 6
 6. ECHO TAIL LENGTH   64       16. AGGR ADPT RATE 10
 7. NLP ACT THRESHOLD  19       17. NRML ADPT RATE 4
 8. AGGR ADAPT RATE    16384    18. AGGR NLP TH    1
 9. NORMAL ADAPT RATE  6144     19. NRML NLP TH    7
10. AGGR MODE DURATION 3        20. DBL-TALK CTRL  3
```

```
cdmaopt                          5ESS Switch
SCREEN 2 OF 3             OFFICE DATA ADMINISTRATION
(5599)                        CDMA OFFICE OPTIONS

ACOUSTIC ECHO CANCELLATION
21. AC ECHO CTRL  N
22. REV LINK AGC  N
23. FRWD LINK AGC N
24. REV LINK NS   N
25. REV LINK NC   N
```

Copyright © 2006 Lucent Technologies

```
cdmaopt                          5ESS Switch            _
SCREEN 3 OF 3             OFFICE DATA ADMINISTRATION
(5599)                        CDMA OFFICE OPTIONS

    REVERSE DTMF         33. FWD LEN OFF 060
26. OVERRIDE    N
27. REV LEN ON  ___          PM TRESHOLDS
28. REV LEN OFF ___      34. ERRORED     __
                         35. LOST        ____
29. PHV4 EVRC IMAGE 0    36. MISINSERTED ____
                         37. CT1         _
30. TTY/TDD ACT N        38. CT2         _
31. PPEE ACT    N

   FORWARD DTMF
32. FWD LEN ON 095
```

Figure 2 SAMPLE CDMAOPT FORM 5E16 SOFTWARE RELEASE

```
cdmaopt                          5ESS Switch
SCREEN 1 OF 3             OFFICE DATA ADMINISTRATION
(5599)                        CDMA OFFICE OPTIONS

*1. KEY 0                       11. FORWARD LINK ALC    000
                                12. REVERSE LINK ALC    000
ELECTRICAL ECHO CANCELLATION    13. HYBRID RET LOSS TH  06
 2. ECHO CANCELLATION  N        14. MAX NOISE FILL LEVL -39
 3. DC REMOVER         Y
 4. NONLINEAR PROC     Y        EL ECHO CANCELLATION (G.168-2000)
 5. NLP NOISE FILL     Y        15. NE SPCH DET TH 6
 6. ECHO TAIL LENGTH   64       16. AGGR ADPT RATE 10
 7. NLP ACT THRESHOLD  19       17. NRML ADPT RATE 4
 8. AGGR ADAPT RATE    16384    18. AGGR NLP TH    1
 9. NORMAL ADAPT RATE  6144     19. NRML NLP TH    7
10. AGGR MODE DURATION 3        20. DBL-TALK CTRL  3
```

```
cdmaopt                          5ESS Switch
SCREEN 2 OF 3             OFFICE DATA ADMINISTRATION
(5599)                        CDMA OFFICE OPTIONS

ACOUSTIC ECHO CANCELLATION
21. AC ECHO CTRL  N
22. REV LINK AGC  N
```

```
23. FRWD LINK AGC N
24. REV LINK NS   N
25. REV LINK NC   N

PACKET BUS OCCUPANCY
26. PB OCC 1TH 70
27. PB OCC 2TH 080
28. PB INT     0005
```

```
cdmaopt                          5ESS Switch          _
SCREEN 3 OF 3             OFFICE DATA ADMINISTRATION
(5599)                        CDMA OFFICE OPTIONS

    REVERSE DTMF                 FORWARD DTMF              PHA2 ATM PVC
29. OVERRIDE    N            36. FWD LEN ON  095       43. VC DDF TIMER 03.5
30. REV LEN ON  ___          37. FWD LEN OFF 060       44. VC DCF TIMER 02.5
31. REV LEN OFF ___                                    45. SEND VP RDI  ON
                             CELL EVENTS THRESHOLDS    46. SEND VC RDI  ON
32. PHV4 EVRC IMAGE 0        38. ERRORED     00        47. VP DDF TIMER 03.5
                             39. LOST        0         48. VP DCF TIMER 02.5
33. TTY/TDD ACT N            40. MISINSERTED 0         49. PL FDF TIMER 02.5
                                                       50. PL FCF TIMER 10.0
       PACKET PIPE                RETRY LIMITS
34. PPEE ACT            N    41. ACT RETRY LIM   3     51. SUBNET ID 0
35. REMOVE PP LIMIT CHK N    42. DEACT RETRY LIM 3
```

Figure 3 SAMPLE CDMAOPT FORM 5E17 SOFTWARE RELEASE

```
cdmaopt                          5ESS Switch
SCREEN 1 OF 3             OFFICE DATA ADMINISTRATION
(5599)                        CDMA OFFICE OPTIONS

*1. KEY 0                       11. FORWARD LINK ALC    000
                                12. REVERSE LINK ALC    000
ELECTRICAL ECHO CANCELLATION    13. HYBRID RET LOSS TH  06
 2. ECHO CANCELLATION  N        14. MAX NOISE FILL LEVL -39
 3. DC REMOVER         Y
 4. NONLINEAR PROC     Y        EL ECHO CANCELLATION (G.168-2000)
 5. NLP NOISE FILL     Y        15. NE SPCH DET TH 6
 6. ECHO TAIL LENGTH   64       16. AGGR ADPT RATE 10
 7. NLP ACT THRESHOLD  19       17. NRML ADPT RATE 4
 8. AGGR ADAPT RATE    16384    18. AGGR NLP TH    1
 9. NORMAL ADAPT RATE  6144     19. NRML NLP TH    7
```

Copyright © 2006 Lucent Technologies

```
10. AGGR MODE DURATION 3        20. DBL-TALK CTRL  3
```

```
cdmaopt                            5ESS Switch
SCREEN 2 OF 3              OFFICE DATA ADMINISTRATION
(5599)                         CDMA OFFICE OPTIONS

21. PHV6 ECHO PATH DELAY 64     PACKET BUS OCCUPANCY
                                27. PB OCC 1TH 70
ACOUSTIC ECHO CANCELLATION      28. PB OCC 2TH 080
22. AC ECHO CTRL  N             29. PB INT     0005
23. REV LINK AGC  N
24. FRWD LINK AGC N                     ISUP
25. REV LINK NS   N             30. SEND CI PARAM N
26. REV LINK NC   N
```

```
cdmaopt                            5ESS Switch            _
SCREEN 3 OF 3              OFFICE DATA ADMINISTRATION
(5599)                         CDMA OFFICE OPTIONS

    REVERSE DTMF             FORWARD DTMF               PHA2 ATM PVC
31. OVERRIDE    N        37. FWD LEN ON  095       44. VC DDF TIMER 03.5
32. REV LEN ON  ___      38. FWD LEN OFF 060       45. VC DCF TIMER 02.5
33. REV LEN OFF ___                                46. SEND VP RDI  ON
                         CELL EVENTS THRESHOLDS    47. SEND VC RDI  ON
34. PHV4 EVRC IMAGE 0    39. ERRORED     00        48. VP DDF TIMER 03.5
                         40. LOST        0         49. VP DCF TIMER 02.5
35. TTY/TDD ACT N        41. MISINSERTED 0         50. PL FDF TIMER 02.5
                                                   51. PL FCF TIMER 10.0
  PACKET PIPE                RETRY LIMITS
36. PPEE ACT N           42. ACT RETRY LIM   3     52. SUBNET ID 0
                         43. DEACT RETRY LIM 3
```

Figure 4 SAMPLE CDMAOPT FORM 5E18 THROUGH 5E19(1) SOFTWARE RELEASES

```
cdmaopt                            5ESS Switch
SCREEN 1 OF 4              OFFICE DATA ADMINISTRATION
(5599)                         CDMA OFFICE OPTIONS

*1. KEY 0                       11. FORWARD LINK ALC    000
                                12. REVERSE LINK ALC    000
ELECTRICAL ECHO CANCELLATION    13. HYBRID RET LOSS TH  06
 2. ECHO CANCELLATION  N        14. MAX NOISE FILL LEVL -39
 3. DC REMOVER         Y
 4. NONLINEAR PROC     Y        EL ECHO CANCELLATION (G.168-2000)
```

```
 5. NLP NOISE FILL     Y        15. NE SPCH DET TH 6
 6. ECHO TAIL LENGTH   64       16. AGGR ADPT RATE 10
 7. NLP ACT THRESHOLD  19       17. NRML ADPT RATE 4
 8. AGGR ADAPT RATE    16384    18. AGGR NLP TH    1
 9. NORMAL ADAPT RATE  6144     19. NRML NLP TH    7
10. AGGR MODE DURATION 3        20. DBL-TALK CTRL  3
```

```
cdmaopt                           5ESS Switch
SCREEN 2 OF 4             OFFICE DATA ADMINISTRATION
(5599)                        CDMA OFFICE OPTIONS

ACOUSTIC ECHO CANCELLATION    PACKET BUS OCCUPANCY
21. AC ECHO CTRL  N           26. PB OCC 1TH 70
22. REV LINK AGC  N           27. PB OCC 2TH 080
23. FRWD LINK AGC N           28. PB INT     0005
24. REV LINK NS   N
25. REV LINK NC   N
```

```
cdmaopt                           5ESS Switch
SCREEN 3 OF 4             OFFICE DATA ADMINISTRATION
(5599)                        CDMA OFFICE OPTIONS

    REVERSE DTMF             FORWARD DTMF               PHA2 ATM PVC
29. OVERRIDE    N        35. FWD LEN ON  095       42. VC DDF TIMER 03.5
30. REV LEN ON  ___      36. FWD LEN OFF 060       43. VC DCF TIMER 02.5
31. REV LEN OFF ___                                44. SEND VP RDI  ON
                         CELL EVENTS THRESHOLDS    45. SEND VC RDI  ON
32. PHV4 EVRC IMAGE 1    37. ERRORED     00        46. VP DDF TIMER 03.5
                         38. LOST        0         47. VP DCF TIMER 02.5
33. TTY/TDD ACT N        39. MISINSERTED 0         48. PL FDF TIMER 02.5
                                                   49. PL FCF TIMER 10.0
  PACKET PIPE                RETRY LIMITS
34. PPEE ACT N           40. ACT RETRY LIM   3     50. SUBNET ID 0
                         41. DEACT RETRY LIM 3
```

```
cdmaopt                           5ESS Switch
SCREEN 4 OF 4             OFFICE DATA ADMINISTRATION
(5599)                        CDMA OFFICE OPTIONS

51. CRBT ACM TIMER  3

      REVERSE DTMF FOR PFS
52. PFS OVERRIDE            N
53. PFS REV LEN ON          ___
54. PFS REV LEN OFF         ___
```

Copyright © 2006 Lucent Technologies

```
55. IPSHO WARNING THRESHOLD 100
56. PHVDATA WARNING THRESHOLD 80
57. PHVVOICE WARNING THRESHOLD 80
```

Figure 5 SAMPLE CDMAOPT FORM 5E20(1) AND LATER SOFTWARE RELEASES

Copyright © 2006 Lucent Technologies

SEC. 81: 5873 RECORD
FACILITY TO EEC EQUIPAGE - FAC2EEC

1. GENERAL

The 5873 Record is available with the 5E14 and later Software Releases. It is used to associate a 24 channel DFI (Digital Facility Interface) or DFI-2 on a DLTU (Digital Line And Trunk Unit) or DLTU (2) with a DS1 (Digital Signal 1) port on a particular QECLI (Quad Echo Canceller Line Interface) pack on an EEC (External Echo Canceller). This form supports the DLTU External Echo Cancellation feature. For more information on this feature, see Division 2, Section 4A550.

1.1 Recent Change View

The corresponding Recent Change View for this form is 19.27.

2. FORM AND RECORD ENTRIES

2.1 BASE AND CONTROL, ESS UNIT

Enter the Base and Control Number and the Office Name on each record.

2.2 * SM

Description: The SM field is used to specify the switching module number.

Software Release: 5E14 and later
Valid Entries: 1 - 192

Data Rules:

When this form is entered, the EQIM form (5700 Record) must exist with an SM-2000 class processor, and the EQSTAT is set to "O".

When this form is entered, an EQDUP form (5730 Record) must exist with DFI USAGE set to "TRUNK".

When this form is entered, an EQDUP form must exist.

2.3 * DLTU

Description: This field is used to specify the Digital Line and Trunk number.

Software Release: 5E14 and later
Valid Entries: 0 - 5

Data Rules:

The DLTU on this form must have a DLTU TYPE of "DLTU24" or "DLTU48" on the EQDU form (5730 Record).

2.4 * DFI

Description: This field is used to specify the Digital Facility Interface pack number.

Software Release: 5E14 and later

Copyright © 2006 Lucent Technologies

Valid Entries: 1 - 10

2.5 * FACILITY

Description: This field is used to specify which facility on a DFI or DFI-2 to use.

Software Release: 5E14 and later
Valid Entries: 0 or 1

ETHERNET LINK

These fields (Section 2.9 - Section 2.10) define the ethernet associated with the DLTU External Echo Cancellation feature.

2.6 # ENET SM

Description: This field is used to specify the ethernet Switching Module that hosts the External Echo Canceller.

Software Release: 5E14 and later
Required Field.
Valid Entries: 1 - 192

Data Rules:

When ENET SM is entered, this SM must exist on the EQIM form with an SM-2000 class processor, and the EQSTAT equal to be "O".

The combination of ENET SM, ENET PIPE, and ENET LINK NBR may occur on this form, or on the DNU2EEC form, but not both.

2.7 ENET PIPE

Description: This field is a No Change field that is used to specify the External Ethernet Pipe number.

Software Release: 5E14 and later
Required Field.
Default: 0

2.8 # ENET LINK NBR

Description: This field is used to specify the External Ethernet Link number.

Software Release: 5E14 and later
Required Field.
Valid Entries: 0 - 69

EXTERNAL ECHO CANCELLER

These fields (Section 2.9 - Section 2.10) define the Quad Echo Canceler Line Interface pack and port numbers associated with the DLTU External Echo Cancellation feature.

2.9 # QECLI

Copyright © 2006 Lucent Technologies

Description: The QECLI (Quad Echo Canceller Line Inter) field is used to specify the External Echo Canceller QECLI pack number.

Software Release: 5E14 and later
Required Field.
Valid Entries: 0 - 10

2.10 # QECLI PORT

Description: This field is used to specify the External Echo Canceller port on the QECLI pack.

Software Release: 5E14 and later
Required Field.
Valid Entries: 0 - 3

```
fac2eec                          5ESS Switch           _
                           OFFICE DATA ADMINISTRATION
(5873)                      FACILITY TO EEC EQUIPAGE

*1. SM       ___         EXTERNAL ECHO CANCELLER
*2. DLTU     __          #8. QECLI      __
*3. DFI      __          #9. QECLI PORT _
*4. FACILITY _

    ETHERNET LINK
#5. ENET SM       ___
    ENET PIPE     0
#7. ENET LINK NBR __
```

Figure 1 SAMPLE FAC2EEC FORM 5E14 AND LATER SOFTWARE RELEASES

Copyright © 2006 Lucent Technologies

SEC. 82: 5874 RECORD
INTER WORKING GATEWAY FORM - EQIWG

1. GENERAL

The 5874 Record is available with the 5E15 and later Software Releases. It is used to define the units of Interworking Gateway which is the bridge between a Switching Module and an ATM (Asynchronous Transfer Mode) switch. This form was added to support the Digital Network Unit-SONET 18 (DNU-S) interface to the Inter-Working Gateway (IWG).

1.1 Recent Change View

The corresponding Recent Change View for this form is 19.26.

2. FORM AND RECORD ENTRIES

2.1 BASE AND CONTROL, ESS UNIT

Enter the Base and Control Number and the Office Name on each record.

2.2 *SM

Description: This field is used to specify the SM (Switching Module) number.

Software Release: 5E15 and later
Required Field.
Valid Entries: 1 - 192

Data Rules:

For 5E15 and later:

Only six EQIWG form tuples are allowed per SM.

When this form is entered and SM and IWG are not equipped with an SM-2000 class processor, the corresponding EQIM form (5700 Record) must be set to an SM-2000 class processor.

When SM is entered on this form, SM must be defined on the EQIM form (5700 Record).

When SM, IWG, and OC-3 DG do not have the appropriate OC-3 AESA entry, each OC-3 AESA entered on this form must not be duplicated on another EQIWG form.

2.3 UNIT TYPE

Description: This field is used to specify the IWG (Interworking Gateway) or IWU (Inter-Working Unit) used by the SM.

Software Release: 5E16 and later
Required Field.
Valid Entries: IWG or IWU

Data Rules:

Copyright © 2006 Lucent Technologies

For 5E16 and later, when UNIT TYPE is "IWU",

UNIT NUMBER must be 1 - 5.

OC3 DG 1 AESA must not be entered.

OC3 DG 2 AESA must not be entered.

When a EQIWG form exist with a UNIT TYPE of "IWG", therefore at least one CICDIST form must exist.

2.4 * UNIT NUMBER (5E15 and earlier, field name was IWG)

Description: This field is used to specify the IWG (Interworking Gateway) number used by the SM.

Software Release: 5E15 and earlier
Required Field.
Valid Entries: 0 - 5 for IWG; 1 - 5 for IWU

2.5 # UNIT SM (5E15 and earlier, field name was IWG SM)

Description: This field is used to indicate the physical SM where the IWG resides.

Software Release: 5E16 and later
Required Field.
Valid Entries: 1 - 192

2.6 # AISLE (5E15 and earlier, name was IWG AISLE)

Description: This field is used to specify the aisle number of the IWG.

Software Release: 5E16 and later
Required Field.
Valid Entries:
For Floor: 0 - 99
For Aisle: 0 - 99

2.7 # BAY (5E15 and earlier, name was IWG BAY)

Description: This field is used to specify the bay number of the IWG.

Software Release: 5E16 and later
Required Field.
Valid Entries: Enter 0 - 14, 90 - 99, 100 - 104, 200 - 208, or 900 - 999

2.8 VER POSITION (5E15 and earlier, name was IWG VERPOS)

Description: This field is used to specify the Vertical Position number of the IWG.

Software Release: 5E16 and later
Required Field.
Valid Entries: 0 - 84

Copyright © 2006 Lucent Technologies

2.9 ENET PIPE

Description: This field is used to specify the number of the External Ethernet Pipe. This is a no change field.

Software Release: 5E15 and later
Valid Entries: 0

2.10 ENET LINK

Description: This field is used to specify the number of the External Ethernet Link. This is a no change field.

Software Release: 5E15 and later
Valid Entries: 0 - 5

Data Rules:

For 5E15 and later, when ENET LINK and ENET PIPE are entered on this form, a corresponding ENETLINK form tuple must exist where the SERV TYPE is equal to "VTOA".

2.11 CLI (5E15 and earlier, name was IWG CLI)

Description: This field is used to specify the change level indicator for the Interworking Gateway. It is a no change field.

Software Release: 5E15 and later
Valid Entries: 0

OC-3 DATAGROUP (OC3)

These fields (Section 2.12 - Section 2.14) define the OC-3 (Optical Carrier-3) Data Group link information associated with the IWG.

2.12 DG

Description: This field is used to specify the data group used by OC3. This is a no change field.

Software Release: 5E15 and later
Valid Entries: 0 - 3

2.13 EQSTAT

Description: This field is used to specify the equipment status of OC3.

Software Release: 5E15 and later
Valid Entries:

Valid EQSTAT Entries

Entry	Definition
G	Growth.
O	Operational.
U	Unequipped.

Data Rules:

When OC3 DG 0 EQSTAT or OC3 DG 0 AESA is entered, both of these fields must be entered.

Copyright © 2006 Lucent Technologies

When OC3 DG 1 EQSTAT or OC3 DG 1 AESA is entered, both of these fields must be entered.

OC3 DG 2 EQSTAT and OC3 DG 3 EQSTAT must not be entered.

2.14 AESA

Description: This field is used to specify the address of ATM (Asynchronous Transfer Mode) end system which is used by each OC3.

Software Release: 5E15 and later
Valid Entries: 0 - ff (hex)

Data Rules:

When any element of AESA is entered, all elements must be entered.[QUESTION: Should this be in the ODIN? I don't see it}

OC3 DG 2 EQSTAT/AESA and OC3 DG 3 EQSTAT/AESA must not be entered.

FACILITY INTERFACES

The fields in (Section 2.15 - Section 2.19) are used to specify the DNUS (Digital Networking Unit SONET) facilities that interface with the IWG.

2.15 FACILITY

Description: This field is used to specify the number of the facility that interfaces with the IWG. FACILITY is a no change field.

Software Release: 5E15 and later
Valid Entries: 1 - 5

2.16 DNUS

Description: The DNUS field is used to specify the digital networking unit SONET number of the IWG facility.

Software Release: 5E15 and later
Valid Entries: 0 - 7

Data Rules:

When DNUS, DATA GROUP, STE or STS in any ROW of IWG FACILITY INTERFACES is entered, all fields in that ROW must be entered.

DNUS, DATA GROUP, STE and STS combinations must be unique for all FACILITY INTERFACES entries.

2.17 DATA GROUP

Description: This field is used to specify the data group number of the DNUS for the IWG.

Copyright © 2006 Lucent Technologies

Software Release: 5E15 and later
Valid Entries: 0 or 1

2.18 STE

Description: The STE field specifies the SONET termination equipment number.

Software Release: 5E15 and later
Valid Entries: 1 - 6

2.19 STS

Description: The STS field specifies the synchronous transport signal number.

Software Release: 5E15 and later
Valid Entries: 1

2.20 EQSTAT

Description: This field is used to specify the equipment status of OC3.

Software Release: 5E16 and later
Valid Entries:

Valid EQSTAT Entries

Entry	Definition
G	Growth.
O	Operational.
U	Unequipped.

Data Rules:

EQSTAT of FACILITY INTERFACES cannot be "U".

```
eqiwg                              5ESS Switch
SCREEN 1 OF 2             OFFICE DATA ADMINISTRATION
(5874)                       INTER WORKING GATEWAY

*1. SM        ___     #5. IWG SM     ___     IWG CLI 00000000
*2. IWG       _       #6. IWG AISLE  ____
    ENET PIPE 0       #7. IWG BAY    ___
    ENET LINK __      #8. IWG VERPOS __

                         10. OC-3 DATA GROUP (OC3)

ROW DG EQSTAT AESA
 1  0    _    __ __ __ __ __ __ __ __ __ __ __ __ __ __ __ __ __ __ __ __
 2  1    _    __ __ __ __ __ __ __ __ __ __ __ __ __ __ __ __ __ __ __ __
 3  2    _    __ __ __ __ __ __ __ __ __ __ __ __ __ __ __ __ __ __ __ __
 4  3    _    __ __ __ __ __ __ __ __ __ __ __ __ __ __ __ __ __ __ __ __
```

```
eqiwg                              5ESS Switch
SCREEN 2 OF 2                OFFICE DATA ADMINISTRATION
(5874)                          INTER WORKING GATEWAY

     35. IWG FACILITY INTERFACES
                     DATA
ROW FACILITY DNUS GROUP STE STS EQSTAT
 1     1      _     _    _   _    _
 2     2      _     _    _   _    _
 3     3      _     _    _   _    _
 4     4      _     _    _   _    _
 5     5      _     _    _   _    _
```

Figure 1 SAMPLE EQIWG FORM 5E15 AND EARLIER SOFTWARE RELEASES

```
eqiwg                              5ESS Switch
SCREEN 1 OF 2                OFFICE DATA ADMINISTRATION
(5874)                       INTER WORKING GATEWAY/UNIT

*1. SM          ___     #4. UNIT SM      ___     ENET PIPE 0
*2. UNIT TYPE   ___     #5. AISLE        ____    ENET LINK __
*3. UNIT NUMBER _       #6. BAY          ___     CLI       00000000
                        #7. VER POSITION __

                         11. OC-3 DATA GROUP (OC3)

ROW DG EQSTAT AESA
 1  0    _    __ __ __ __ __ __ __ __ __ __ __ __ __ __ __ __ __ __ __ __
 2  1    _    __ __ __ __ __ __ __ __ __ __ __ __ __ __ __ __ __ __ __ __
 3  2    _    __ __ __ __ __ __ __ __ __ __ __ __ __ __ __ __ __ __ __ __
 4  3    _    __ __ __ __ __ __ __ __ __ __ __ __ __ __ __ __ __ __ __ __
```

```
eqiwg                              5ESS Switch
SCREEN 2 OF 2                OFFICE DATA ADMINISTRATION
(5874)                       INTER WORKING GATEWAY/UNIT

36. FAC INTERFACES (FACILITY INTERFACES)
                     DATA
ROW FACILITY DNUS GROUP STE STS EQSTAT
 1     1      _     _    _   _    _
 2     2      _     _    _   _    _
 3     3      _     _    _   _    _
```

Copyright © 2006 Lucent Technologies

4	4	_	_	_	_	_
5	5	_	_	_	_	_

Figure 2 SAMPLE EQIWG FORM 5E16 AND LATER SOFTWARE RELEASES

Copyright © 2006 Lucent Technologies

SEC. 83: 5831 RECORD
APCX EQUIPAGE FORM - EQAPCX

1. GENERAL

The Application Controller Expansion Unit form is available for 5E15 and later. The form supports the OXU (Optically Extended Control and Data Unit) feature (99-5E-4822). The OXU can only be assigned for SM-2000 class processors (see UNIT TYPE on the EQIM form). See Division 2, Section 9V.

1.1 Recent Change View

The corresponding Recent Change View is 18.18.

2. FORM AND RECORD ENTRIES - 5831 RECORD

2.1 BASE AND CONTROL, ESS UNIT

Enter the Base and Control Number and Office Name on each record.

2.2 *SM

Description: Enter the Switching Module number.

Required Field.
Valid Entries: 1 - 192

Data Rules:

The entered SM must be defined on a EQIM form.

2.3 *MC

Description: Enter the Module Controller number.

Required Field.
Valid Entries: 0 or 1

2.4 UNIT TYPE

Description: Enter the UNIT TYPE. The only valid value is "APCO" (Application Processor Optical Extension) unit.
Default: APCO

2.5 EQSTAT

Description: Enter the status of the equipment.
Valid Entries:

Valid EQSTATUS Entries

Entry	Definition
U	Unequipped.
G	Growth.
O	Operational.

Copyright © 2006 Lucent Technologies

2.6 #CLI

Description: Enter the Change Level Indicator. See Division 8, Section 1 for valid CLI values.

Required Field.
Valid Entries: 0 through 7fffffff hexadecimal.

```
eqapcx                          5ESS Switch            _
                         OFFICE DATA ADMINISTRATION
(5831)                       APCX EQUIPAGE FORM

*1. SM        ___
*2. MC        _
 3. UNIT TYPE APCO
 4. EQSTAT    O
#5. CLI       ________
```

Figure 1 SAMPLE EQAPCX FORM 5E15 AND LATER SOFTWARE RELEASES

Copyright © 2006 Lucent Technologies

SEC. 84: 5832
EXTENDED CONTROL AND DATA UNIT EQUIPAGE FORM - EQXCDU

1. GENERAL

The 5832 Record is available with 5E15 and later Software Releases. It is used to define the Extended Control and Data Unit. This form supports the OXU (Optically Extended Control and Data Unit (99-5E-4822) feature. See Division 2, Section 9V.

For each EQXCDU form, there must be two corresponding EQAPCX forms (5831 Record) for Module Controller 0 and Module Controller 1 for the same Switching Module.

1.1 Recent Change View

The Recent Change View for this form is 18.19.

2. FORM AND RECORD ENTRIES

2.1 BASE AND CONTROL, ESS UNIT

Enter the Base and Control Number and the Office Name on each record.

2.2 *SM

Description: Enter the Switching Module Number.

Required Field.
Valid Entries: 1 - 192

Data Rules:

The SM entered must be defined on the EQIM form (5700 Record).

EQXCDU forms can only be assigned on SM-2000 class processors (see UNIT TYPE on the EQIM form).

For 5E16(2) and later:

When SM and INTF UNIT on this form matches the SM and INTF UNIT on the following forms:

EQDCLU,

EQDCTU,

EQDSC3,

EQDU/EQDUP,

EQGDSC3,

EQIDCU,

EQISLU,

EQLU,

Copyright © 2006 Lucent Technologies

EQMSU,

EQPSU,

EQRA, and/or

EQTU,

the EQUIPMENT BAY on these forms, must match the BAY on this form.

When SM and INTF UNIT on this form matches the SM and INTF UNIT on the following forms:

EQDU/EQDUP,

EQGDSC3,

EQMSU, and/or

EQRA,

the CSU on these forms, must be set to "N".

2.3 *INTF UNIT

Description: Enter the Interface Unit number.
Valid Entries: 1 - 8

Data Rules:

When INTF UNIT is greater than 0 on any equipment form, there must be a corresponding EQXCDU form.

2.4 PRIMARY UNIT

Description: Enter the Primary Unit number.
Valid Entries: 0 - 8

Data Rules:

5E16(2) and later:

When PRIMARY UNIT is 0, BAY must be 000 - 014, 100 - 104, or 200 - 208.

When PRIMARY UNIT is 1, BAY must be A00 - A14, B00 - B04, or C00 - C08.

When PRIMARY UNIT is 2, BAY must be D00 - D14, E00 - E04, or F00 - F08.

When PRIMARY UNIT is 3, BAY must be G00 - G14, H00 - H04, or J00 - J08.

When PRIMARY UNIT is 4, BAY must be K00 - K14, L00 - L04, or M00 - M08.

When PRIMARY UNIT is 5, BAY must be N00 - N14, P00 - P04, or Q00 - Q08.

When PRIMARY UNIT is 6, BAY must be R00 - R14, S00 - S04, or T00 - T08.

Copyright © 2006 Lucent Technologies

When PRIMARY UNIT is 7, BAY must be U00 - U14, V00 - V04, or W00 - W08.

When PRIMARY UNIT is 8, BAY must be X00 - X14, Y00 - Y04, or Z00 - Z08.

2.5 UNIT TYPE

Description: Enter the Unit Type. The only valid value is OXU.

Required Field.
Default: OXU

2.6 # AISLE

Description: Enter the Equipment Location Aisle Number. This entry consists of a floor and aisle number. The first and second digits, from the left, are the floor number. Valid floor numbers are 00 - 99. The third and fourth digits, from the left, are the aisle number. Valid aisle numbers are 00 - 99. It is recommended that floor 00 be used for equipment located in the basement per floor plan designation.

Required Field.
Valid Entries: 00 - 99

2.7 #BAY

Description: Enter the Equipment Location Bay Number.

Required Field.
Valid Entries:

Valid BAY Entries, 5E9(2) - 5E16(1)

Entry	Definition
0 - 4	Switching Module (non-SM-2000).
0 - 14	SM-2000; SM Cabinet aisle.
100 - 104	SM-2000; Back panel; wiring position.
200 - 208	SM-2000; Front panel; door position.

Valid BAY Entries for 5E16(2) and later

Entry			Type
000 - 004			SM
000 - 014,	100 - 104,	200 - 208,	SM-2000
A00 - A14,	B00 - B04,	C00 - C08,	
D00 - D14,	E00 - E04,	F00 - F08,	
G00 - G14,	H00 - H04,	J00 - J08,	
K00 - K14,	L00 - L04,	M00 - M08,	
N00 - N14,	P00 - P04,	Q00 - Q08,	
R00 - R14,	S00 - S04,	T00 - T08,	
U00 - U14,	V00 - V04,	W00 - W08,	
X00 - X14,	Y00 - Y04,	Z00 - Z08	

2.8 #VERTPOS

Description: Enter the Vertical Equipment Location that specifies the bottom of the unit. The recommended values for this are:

7, 15, 24, 32, 41, 49, 58, 69, 76

Copyright © 2006 Lucent Technologies

Required Field.
Valid Entries: 0 - 84

2.9 #MODCTL SG0 CLI

Description: Enter the CLI value for the Module Controller Service Group 0. See Division 8, Section 1 for valid CLI values.

Required Field.
Valid Entries: Enter 0 through 7fffffff hexadecimal.

2.10 MODCTL SG0 EQSTAT

Description: Enter the status for the Module Controller Service Group 0.
Default: O
Valid Entries:

Valid MODCTL SG0 EQSTAT Entries

Entry	Definition
O	Operational.
G	Growth.
U	Unequipped.

Data Rules:

The MODCTL SG0 EQSTAT entered must not be greater than the EQSTAT on the EQAPCX form for the same SM and Module Controller 0 (e.g., "O" is greater than "G" which is greater than "U").

2.11 #MODCTL SG1 CLI

Description: Enter the CLI value for the Module Controller Service Group 1. See Division 8, Section 1 for valid CLI values.

Required Field.
Valid Entries: Enter 0 through 7fffffff hexadecimal.

2.12 MODCTL SG1 EQSTAT

Description: Enter the status for the Module Controller Service Group 1.
Default: O
Valid Entries:

Valid MODCTL SG1 EQSTAT Entries

Entry	Definition
O	Operational.
G	Growth.
U	Unequipped.

Data Rules:

The MODCTL SG1 EQSTAT entered must not be greater than the EQSTAT on the EQAPCX form for the same SM and Module Controller 1 (e.g., "O" is greater than "G" which is greater than "U").

OXU DI0 INFO

The following fields (Section 2.13 - Section 2.18) define the DI (Data Interface) CLI and Equipment Status

Copyright © 2006 Lucent Technologies

information.

2.13 #DIO SG0 CLI

Description: Enter the DI0 SG0 Change Level Indicator. See Division 8, Section 1 for valid CLI values.
Valid Entries: Enter 0 through 7fffffff hexadecimal.

2.14 DI0 SGO EQSTAT

Description: Enter the status for the Data Interface Service Group 0.

Required Field.
Valid Entries:

Valid EQUIPMENT STATUS Entries

Entry	Definition
O	Operational.
G	Growth.
U	Unequipped.

2.15 #DI0 SG1 CLI

Description: Enter the Data Enterface 0 Service Group 1 Change Level Indicator. See Division 8, Section 1 for valid CLI values.

Required Field.
Valid Entries: Enter 0 through 7fffffff hexadecimal.

2.16 DI0 SG1 EQSTAT

Description: Enter the status for the Data Interface 0 Service Group 1.

Required Field.
Valid Entries:

Valid DI0 SG1 EQSTAT Entries

Entry	Definition
O	Operational.
G	Growth.
U	Unequipped.

2.17 #DI0 TSI BOARD

Description: Enter the Data Interface 0 Time Slot Interchanger Board.
Valid Entries: 0 - 9

Data Rules:

The combination of TSI BOARD and TSI SLOT entries on the following forms:
EQDI
EQDNUS
EQIWG
EQPDXU
EQPSU
EQPCTP
EQXCDU and/or

Copyright © 2006 Lucent Technologies

EQNLI
must not be duplicated on any other EQDI form (except when entering the second of a DI pair); on the same or any other EQNLI form; on the same or any other EQPDXU form (except when entering a PCTDX1 where the XAIU CONFIG is equal to "LOW"); or on any EQPSU, EQPCTP, EQDNUS, or EQXCDU form for a given SM.

When DI0 TSI BOARD is 0, and DI0 TSI SLOT is 3 on the EQXCDU form, VCDX OFFICE must be set to "Y" on the EQCORE form. Only in a VCDX office can TSI BOARD = 0 be used for OXU assignments. In non-VCDX offices, TSI BOARD = 0 is reserved for NLI, DX and MH assignment.

2.18 #DI0 TSI SLOT

Description: Enter the Data Interface 0 Time Slot number.

Required Field.
Valid Entries: 0 - 3

Data Rules:

```
eqxcdu                          5ESS Switch            _
                         OFFICE DATA ADMINISTRATION
(5832)           EXTENDED CONTROL AND DATA UNIT EQUIPAGE FORM

 *1. SM                ___                 OXU DI0 INFO
 *2. INTF UNIT         _           #12. DI0 SG0 CLI    ________
  3. PRIMARY UNIT      0            13. DI0 SG0 EQSTAT O
  4. UNIT TYPE         OXU         #14. DI0 SG1 CLI    ________
 #5. AISLE             ____         15. DI0 SG1 EQSTAT O
 #6. BAY               ___         #16. DI0 TSI BOARD  _
 #7. VERTPOS           __          #17. DI0 TSI SLOT   _
 #8. MODCTL SG0 CLI    ________
  9. MODCTL SG0 EQSTAT O
#10. MODCTL SG1 CLI    ________
 11. MODCTL SG1 EQSTAT O
```

Figure 1 SAMPLE EQXCDU FORM 5E15 AND LATER SOFTWARE RELEASES

Copyright © 2006 Lucent Technologies

SEC. 85: 5760 Record
OPTICAL INTERFACE UNIT FORM - EQOIU

1. GENERAL

The 5760 Record is available with 5E16(2) and later Software Releases. It is used to define the assignment and location of an OIU (Optical Interface Unit). This form supports the following features:

OIU (Optical Interface Unit) OC-3 (Optical Carrier Level 3) NAR (North American Region) feature (99-5E-7140). For more information, see Division 2, Section 7BQ.

OIU - IP (Optical Interface Unit - Internet Protocol) feature (99-5E-8308). This feature is made available in 5E16 Feature Release 3. (For more information on this feature, see Division 2, Section 7BX.)

1.1 Recent Change View

The Recent Change View for this form is 19.28.

2. FORM AND RECORD ENTRIES

2.1 BASE AND CONTROL, ESS UNIT

Enter the Base and Control Number and the Office Name on each record.

2.2 * OIU SM

Description: The OIU SM (Optical Interface Unit) (Switching Module) field is used to indicate to which SM the OIU is assigned.

Software Release: 5E16(2) and later
Valid Entries: 1 - 192

Data Rules:

OIU SM must be defined as an SM with SM-2000 class processor on the EQIM form.

2.3 * OIU

Description: This field is used to assign the unit number for an OIU unit.

Software Release: 5E16(2) and later
Valid Entries: 0 - 7

2.4 # AIP SM

Description: This field is used to specify the SM number for the desired AIP (Any Media Interface Platform).

Required Field.

Software Release: 5E16(2) and later
Valid Entries: 1 - 192

Copyright © 2006 Lucent Technologies

Data Rules:

AIP SM and AIP must be defined on the EQAIP form (5761 Record).

2.5 # AIP

Description: This field is used to specify the AIP unit number.

Required Field.

Software Release: 5E16(2) and later
Valid Entries: 0 - 15

2.6 # CLI

Description: The CLI (Change Level Indicator) field is used to specify the change level indicator of the OIU. This is a no change field.

Software Release: 5E16(2) and later
Valid Entries: 0

Data Rules:

CLI must be 0.

```
eqoiu                              5ESS Switch
                            OFFICE DATA ADMINISTRATION
(5760)                        OPTICAL INTERFACE UNIT

*1. OIU SM ___
*2. OIU    _
#3. AIP SM ___
#4. AIP    __
    CLI    00000000
```

Figure 1 SAMPLE EQOIU FORM 5E16(2) AND LATER SOFTWARE RELEASES

Copyright © 2006 Lucent Technologies

SEC. 86: 5761 Record
OPTICAL FACILITY INTERFACE PACK FORM - EQOIUP

1. GENERAL

The 5761 Record is available with 5E16(2) and later Software Releases. It is used to insert, review, update, and delete OFI (Optical Facility Interface) packs. This form supports the following features:

OIU (Optical Interface Unit) OC-3 (Optical Carrier Level 3) NAR (North American Region) feature (99-5E-7140). For more information, see Division 2, Section 7BQ.

OIU - IP (Optical Interface Unit - Internet Protocol) feature (99-5E-8308). This feature is made available in 5E16 Feature Release 3. (For more information on this feature, see Division 2, Section 7BX.)

1.1 Recent Change View

The Recent Change View for this form is 20.28.

2. FORM AND RECORD ENTRIES

2.1 BASE AND CONTROL, ESS UNIT

Enter the Base and Control Number and the Office Name on each record.

2.2 * OIU SM

Description: The OIU SM (Optical Interface Unit) (Switching Module) field is used to indicate to which SM the OIU is assigned.

Software Release: 5E16(2) and later
Valid Entries: 1 - 192

Data Rules:

OIU SM and OIU must be defined on the EQOIU form (5760 Record).

OIU SM must be defined as SM on the EQMH form (5856 Record) with both MH SIDE 0 EQSTAT and MH SIDE 1 EQSTAT set to "O".

2.3 * OIU

Description: This field is used to indicate the OIU unit number.

Software Release: 5E16(2) and later
Valid Entries: 0 - 7

2.4 * PROTECTION GRP

Description: This field is used to define the Protection group number.

Software Release: 5E16(2) and later
Valid Entries: 0 - 9

Copyright © 2006 Lucent Technologies

Data Rules:

PROTECTION GRP must be unique for each AIP SM and AIP set on the EQOIU forms (5760 Record).

2.5 # OFI 0 CLI

Description: The Optical Facility Interface 0 Change Level Indicator field is used to specify the change level indicator of the OFI (Optical Facility Interface). This indicator is used by system software to determine the hardware version of the associated circuit board.

Required Field.

Software Release: 5E16(2) and later
Valid Entries:

PACK	CLI
LPA931	0
LPA935	0
LPA936	1

Data Rules:

OFI 0 CLI and/or OFI 1 CLI 0 or 1 depending on the pack.

2.6 # OFI 1 CLI

Description: The Optical Facility Interface 1 Change Level Indicator field is used to specify the change level indicator of the OFI (Optical Facility Interface). This indicator is used by system software to determine the hardware version of the associated circuit board.

Required Field.

Software Release: 5E16(2) and later
Valid Entries:

PACK	CLI
LPA931	0
LPA935	0
LPA936	1

2.7 #PACK TYPE

Description: This field is used to specify the type of pack being inserted. This is a no change field.

Software Release: 5E16(2) and later
Default: OFI24
Valid Entries: OFI24 or OFIPKT

Data Rules:

For 5E16(2) and later, when PACK TYPE is "OFI24":

CP INHIBIT must be "N".

BNID must be blank.

Copyright © 2006 Lucent Technologies

When PACK TYPE on this form is "OFIPKT", SM USAGE on the EQIM form (5700 Record) must not be "ORM".

2.8 PAYLOAD TYPE

Description: This field is used to define the type of facility that will be connected. This is a no change field.

Software Release: 5E16(2) and later
Default: OC3

2.9 SERVICE TYPE

Description: This field is used to define the type of traffic that will be carried. This is a no change field.

Software Release: 5E16(2) and later

Data Rules:

For 5E16(2) and later, when SERVICE TYPE is "IPV4", OFILINK PCT 1 must exist before OFILINK PCT 2.

OFI PCT LINK (OFILINK)

The OFI LINK list is used to assign PCT (Peripheral, Control and Timing) links to the OFI.

2.10 TSI BOARD

Description: The Time Slot Interchange Board field is used to specify the TSI board a PCT link is connected to.

Software Release: 5E16(2) and later
Valid Entries: 1 - 9

Data Rules:

Row 1 of the OFI PCT LINK list must be entered.

Combinations of TSI BOARD/TSI SLOT must be unique within the OFI PCT LINK list.

TSI BOARD must be defined as a TSI BOARD with EQSTAT set to "O" on the EQTSI form.

2.11 TSI SLOT

Description: The Time Slot Interchange Slot field is used to specify the TSI slot a PCT link is connected to.

Software Release: 5E16(2) and later
Valid Entries: 0 - 3

2.12 EQSTAT 0

Description: The Equipment Status 0 field defines the state of the link on side 0.

Software Release: 5E16(2) and later
Valid Entries:

Copyright © 2006 Lucent Technologies

Valid EQUIPMENT STATUS Entries	
Entry	**Definition**
G	Growth.
O	Operational.
U	Unequipped.

Data Rules:

EQSTAT 0 and 1 of ROW 1 OFI PCT LINK list cannot be "O" during insert.

2.13 EQSTAT 1

Description: The Equipment Status 1 field defines the state of the link on side 1.

Software Release: 5E16(2) and later
Valid Entries:

Valid EQUIPMENT STATUS Entries	
Entry	**Definition**
G	Growth.
O	Operational.
U	Unequipped.

Data Rules:

EQSTAT 0 must not be greater than EQSTAT 1 in any row.

EQSTAT of row 1 must not be less than EQSTAT rows 2 or 3 on any side.

2.14 BNID

Description: The Bearer Network Identification number field is used to define the Bearer Network ID associated with this OFI. This field supports the OIU-IP (Optical Interface Unit - Internet Protocol) feature (99-5E-8308). See Division 2, Section 7BX.

Software Release: 5E16(2) and later
Valid Entries: Blank, or enter 1 - 512

Data Rules:

For 5E16(2) and later, BNID must be entered when PACK TYPE is "OFIPKT".

BNID on this form must be defined on the BEARERNET form (5935 Record) with a BEARER TYPE of "OIU".

2.15 MAX ENG TS

Description: The Maximum Engineerable Time Slots field is used to define the maximum engineerable time slots. This field supports the OIU-IP (Optical Interface Unit - Internet Protocol) feature (99-5E-8308). See Division 2, Section 7BX.

Software Release: 5E16(2) and later
Valid Entries: Blank, or enter 672 - 2016

Data Rules:

For 5E16(2) and later:

Copyright © 2006 Lucent Technologies

MAX ENG TS must be blank:

when SERVICE TYPE is not "IPV4"

during insert and when SERVICE TYPE is not "IPV4"

When MAX ENG TS is entered and one OFI PCT LINK exists, MAX ENG TS must be between 672 and 720.

When MAX ENG TS is entered and two OFI PCT LINKS exist, MAX ENG TS must be between 672 and 1488.

When MAX ENG TS is entered and three OFI PCT LINKS exist, MAX ENG TS must be between 672 and 2016.

When MAX ENG TS is entered, OFI PCT LINK EQSTAT 0 must be "0".

2.16 CP INHIBIT

Description: The Call Processing Inhibit field is used specify the call processing inhibit. This field supports the OIU-IP (Optical Interface Unit - Internet Protocol) feature (99-5E-8308). See Division 2, Section 7BX.

Software Release: 5E16(2) and later
Default: N
Valid Entries: Y, N

```
eqoiup                              5ESS Switch
                            OFFICE DATA ADMINISTRATION
(5761)                    OPTICAL FACILITY INTERFACE PACK

*1. OIU SM          ___             9. OFI PCT LINK (OFILINK)
*2. OIU             _
*3. PROTECTION GRP  _                    TSI   TSI  EQSTAT EQSTAT
#4. OFI 0 CLI       ________     ROW PCT BOARD SLOT 0      1
#5. OFI 1 CLI       ________      1   0    _    _     _      _
#6. PACK TYPE       _______       2   1    _    _     _      _
    PAYLOAD TYPE    _______       3   2    _    _     _      _
    SERVICE TYPE    ____
                                 14. BNID       ___
                                 15. MAX ENG TS ____
                                 16. CP INHIBIT N
```

Figure 1 SAMPLE EQOIUP FORM 5E16(2) AND LATER SOFTWARE RELEASES

Copyright © 2006 Lucent Technologies

SEC. 87: 5762 Record
OIU SONET TERMINATING EQUIPMENT FORM - EQOSTE

1. GENERAL

The 5762 Record is available with 5E16(2) and later Software Releases. It is used to insert, review, update, and delete OIU (Optical Interface Unit) STEs (SONET (Synchronous Optical Network) Terminating Equipment). This form supports the following features:

OIU (Optical Interface Unit) OC-3 (Optical Carrier Level 3) NAR (North American Region) feature (99-5E-7140). For more information, see Division 2, Section 7BQ.

OIU - IP (Optical Interface Unit - Internet Protocol) feature (99-5E-8308). This feature is made available in 5E16 Feature Release 3. (For more information on this feature, see Division 2, Section 7BX.)

1.1 Recent Change View

The Recent Change View for this form is 20.29.

2. FORM AND RECORD ENTRIES

2.1 BASE AND CONTROL, ESS UNIT

Enter the Base and Control Number and the Office Name on each record.

2.2 * OIU SM

Description: The OIU SM (Optical Interface Unit) (Switching Module) field is used to indicate to which SM the OIU is assigned.

Software Release: 5E16(2) and later
Valid Entries: 1 - 192

Data Rules:

OIU SM, OIU, and PROTECTION GRP must be defined on the EQOIUP form (5761 Record).

OIU SM must be defined as an SM with SM-2000 class processor on the EQIM form (5700 Record).

2.3 * OIU

Description: This field is used to specify the OIU unit number.

Software Release: 5E16(2) and later
Valid Entries: 0 - 7

2.4 * PROTECTION GRP

Description: This field is used to define the APS (Automatic Protection Switching) group number.

Software Release: 5E16(2) and later
Valid Entries: 0 - 9

Copyright © 2006 Lucent Technologies

2.5 STE

Description: This field is used to indicate the SONET Terminating Equipment number. This is a no change field.

Software Release: 5E16(2) and later
Default: 1

2.6 STE TYPE

Description: This' field is used to indicate the SONET (Synchronous Optical Network) Termination Equipment Type.

Software Release: 5E16(2) and later
Valid Entries:

Valid STE TYPE Entries

Entry	Definition
OC3	Optical Carrier Level 3.
OC3C	Optical Carrier Level 3 Concatenated signal.

2.7 # STE 0 EQSTAT

Description: The Equipment Status for side 0 of the STE.
Required field.

Software Release: 5E16(2) and later
Valid Entries:

Valid EQUIPMENT STATUS Entries

Entry	Definition
G	Growth.
O	Operational.
U	Unequipped.

Data Rules:

STE 0 EQSTAT and STE 1 EQSTAT must be equal.

2.8 # STE 1 EQSTAT

Description: The Equipment Status for side 1 of the STE.
Required field.

Software Release: 5E16(2) and later
Valid Entries:

Valid EQUIPMENT STATUS Entries

Entry	Definition
G	Growth.
O	Operational.
U	Unequipped.

2.9 PM GROUP

Description: This field is used to assign a performance monitoring group for this STE.

Copyright © 2006 Lucent Technologies

Software Release: 5E16(2) and later
Valid Entries: Blank, or 1 - 8 alphanumeric characters

Data Rules:

PM GROUP must be defined as PM GROUP on the OIUPM form (5767 Record) where CKT TYPE equals "OC3".

2.10 CGA GROUP

Description: This field is used to assign a Carrier Group Alarm group for the STE.

Software Release: 5E16(2) and later
Valid Entries: Blank, or 1 - 8 alphanumeric characters

Data Rules:

CGA GROUP must be defined as CGA GROUP on the CGATIME form (5766 Record) with SONET TYPE set to "Y".

2.11 CLFI

Description: The Common Language Facility Identifier field is used to assign a descriptive name to this facility.

Software Release: 5E16(2) and later
Valid Entries: Blank, or 1 - 25 alphanumeric characters

2.12 PAYLOAD TYPE

Description: This field is used to designate what type of payload the STE carriers. This is a no change field.

Software Release: 5E16(2) and later
Default: STS1FAC

AUTOMATIC PROTECTION SWITCHING

2.13 SF THRESHOLD

Description: The SF (Signal Fail) Threshold field is used to specify the bit error rate at which SF is declared. Required field.

Software Release: 5E16(2) and later
Default: 3
Valid Entries:

Valid SF THRESHOLD Entries

Entry	Definition
3	Ten to the power -3
4	Ten to the power -4
5	Ten to the power -5

2.14 SD THRESHOLD

Description: The SD (Signal Degrade) Threshold field is used to specify the bit error rate at which SD is declared.

Copyright © 2006 Lucent Technologies

Required field.

Software Release: 5E16(2) and later
Default: 5
Valid Entries:

Valid SD THRESHOLD Entries	
Entry	**Definition**
5	Ten to the power -5
6	Ten to the power -6
7	Ten to the power -7
8	Ten to the power -8
9	Ten to the power -9

2.15 APS INHIBIT

Description: The Automatic Protection Switching Inhibit field indicates whether or not APS should be inhibited.
Required field.

Software Release: 5E16(2) and later
Default: N
Valid Entries: Y, N

2.16 APS ARCH

Description: The Automatic Protection Switching Architecture field is used to specify the APS architecture.
Required field.

Software Release: 5E16(2) and later
Default: 1PLUS1
Valid Entries:

Valid APS ARCH Entries	
Entry	**Definition**
1PLUS1	1+ 1 full duplex

Data Rules:

When APS ARCH is "1P1DBSF", APS MODE must be "UNIDIRECT".

2.17 APS MODE

Description: The Automatic Protection Switching Mode field is used to indicate whether or not the traffic channel selection is done based on local conditions only, or if it is also dependent on remote conditions.

Required field.

Software Release: 5E16(2) and later
Default: UNIDIRECT
Valid Entries:

Valid APS MODE Entries	
Entry	**Definition**
BIDIRECT	bi-directional APS mode
UNIDIRECT	uni-directional APS mode

Data Rules:

Copyright © 2006 Lucent Technologies

When APS MODE is "BIDIRECT", APS ARCH must be "1PLUS1".

```
eqoste                              5ESS Switch
                            OFFICE DATA ADMINISTRATION
(5762)                    OIU SONET TERMINATING EQUIPMENT

*1. OIU SM          ___                            AUTOMATIC PROTECTION SWITCHING
*2. OIU             _                              12. SF THRESHOLD 3
*3. PROTECTION GRP  _                              13. SD THRESHOLD 5
    STE             1                              14. APS INHIBIT  N
#5. STE TYPE        _______                        15. APS ARCH     1PLUS1
#6. STE 0 EQSTAT    _                              17. APS MODE     UNIDIRECT
#7. STE 1 EQSTAT    _
 8. PM GROUP        ________
 9. CGA GROUP       ________
10. CLFI            __________________________
    PAYLOAD TYPE    _______
```

Figure 1 SAMPLE EQOSTE FORM 5E16(2) AND LATER SOFTWARE RELEASES

Copyright © 2006 Lucent Technologies

SEC. 88: 5763 Record
HIGH LEVEL VIRTUAL CONTAINER FORM - EQHVC

1. GENERAL

The 5763 Record is available with 5E16(2) and later Software Releases. It is used to insert, review, update, and delete HVCs (High Level Virtual Containers). This form supports the the following features:

OIU (Optical Interface Unit) OC-3 (Optical Carrier Level 3) NAR (North American Region) feature (99-5E-7140). For more information, see Division 2, Section 7BQ.

OIU - IP (Optical Interface Unit - Internet Protocol) feature (99-5E-8308). This feature is made available in 5E16 Feature Release 3. (For more information on this feature, see Division 2, Section 7BX.)

1.1 Recent Change View

The Recent Change View for this form is 20.30.

2. FORM AND RECORD ENTRIES

2.1 BASE AND CONTROL, ESS UNIT

Enter the Base and Control Number and the Office Name on each record.

2.2 * OIU SM

Description: The OIU SM (Optical Interface Unit) (Switching Module) field is used to indicate to which SM the OIU is assigned.

Software Release: 5E16(2) and later
Valid Entries: 1 - 192

Data Rules:

OIU SM, OIU, and PROTECTION GRP must be defined on the EQOSTE form (5762 Record) where the EQHVC form's HVC TYPE is equal to the EQOSTE form's PAYLOAD TYPE.

2.3 * OIU

Description: This field is used to specify the OIU unit number.

Software Release: 5E16(2) and later
Valid Entries: 0 - 7

2.4 * PROTECTION GRP

Description: This field is used to define the APS (Automatic Protection Switching) group number.

Software Release: 5E16(2) and later
Valid Entries: 0 - 9

2.5 STE

Copyright © 2006 Lucent Technologies

Description: This field is used to indicate SONET Terminating Equipment. This is a no change field.

Software Release: 5E16(2) and later
Default: 1

2.6 * HVC

Description: This field is used to assign a number to an HVC (High Level Virtual Container).

Software Release: 5E16(2) and later
Valid Entries: 1- 3

2.7 HVC TYPE

Description: The HVC (High Level Virtual Container) TYPE field is used to specify the type of HVC.
Required field.

Software Release: 5E16(2) and later
Default: STS3C
Valid Entries:

Valid HVC TYPE Entries

Entry	Definition
STS1FAC	OIU STS-1 (Synchronous Transport Signal 1) Facility
STS3C	OIU Synchronous Transport Signal Facility.

Data Rules:

When HVC TYPE is "STS1FAC", PAYLOAD TYPE must be "VT1".

When HVC TYPE is "STS3C", HVC must be 1.

When HVC TYPE is "STS3C", PAYLOAD TYPE must be "OIUSAAL" or "PPPLNK".

2.8 # HVC EQSTAT

Description: This field is used to set the equipment status of an HVC.
Required field.

Software Release: 5E16(2) and later
Valid Entries:

Valid HVC Equipment Status Entries

Entry	Definition
G	Growth.
O	Operational.
U	Unequipped.

Data Rules:

HVC EQSTAT must be greater than or equal to LVC EQSTAT on the EQLVC form (5764 Record) (i.e., "O" is greater than "G" which is greater than "U").

HVC EQSTAT must be no greater than the STE 0 EQSTAT and/or STE 1 EQSTAT on the EQOSTE form (5762 Record).

Copyright © 2006 Lucent Technologies

2.9 PM GROUP

Description: This field is used to assign a performance monitoring group to this HVC.

Software Release: 5E16(2) and later
Valid Entries: Blank, or 1 - 8 alphanumeric characters

Data Rules:

PM GROUP and HVC TYPE must be defined as PM GROUP on the OIUPM form (5767 Record) where CKT TYPE equals the HVC TYPE.

PM GROUP must not equal "OSTEDEF", OSTEGDF", "OSTS1GD", "OVT1DEF", OVT1GDF", "ODS1EDF", ODS1EGD", "ODS1SDF", or "ODS1SGD".

2.10 CGA GROUP

Description: This field is used to assign a Carrier Group Alarm group to this HVC.

Software Release: 5E16(2) and later
Valid Entries: Blank, or 1 - 9 alphanumeric characters

Data Rules:

CGA GROUP must be defined as CGA GROUP on the CGATIME form (5766 Record) with SONET TYPE set to "Y".

CGA GROUP must not equal "SDHGDEF", "CNTGDEF", or "CNTDEF".

2.11 CLFI

Description: This field is used to assign a descriptive name to this facility.

Software Release: 5E16(2) and later
Valid Entries: Blank, or 1 - 25 alphanumeric characters

2.12 PAYLOAD TYPE

Description: This field is used to designate what type of payload the HVC carries.
Required field.

Software Release: 5E16(2) and later
Valid Entries:

Valid HVC TYPE Entries

Entry	Definition
OIUSAAL	Optical Interface Unit Signaling ATM (Assynchronous Transfer Mode) Adaptation Layer facility.
PPPLNK	Point-to-Point Link facility.
VT15	Virtual Tributary at the 1.5 level facility

Data Rules:

When PAYLOAD TYPE is "VT15" SLBL must be "EQHV", "UNEQHV", or "VT".

When PAYLOAD TYPE is "PPPLNK", SLBL must be "EQHV", "PPPWS", or "UNEQHV".

Copyright © 2006 Lucent Technologies

When PAYLOAD TYPE is "OIUSAAL", SLBL must be "ATM", "EQHV", or "UNEQHV".

2.13 SLBL

Description: The Signal Label field is used to specify the signaling label for this facility.
Required field.

Software Release: 5E16(2) and later
Default: VT
Valid Entries:

Valid SLBL Entries

Entry	Definition
ATM	ATM Structure
EQHV	Equipped - non-specific
PPPWS	PPP with scrambling Structure
UNEQHV	Unequipped or supervisory-unequipped.
VT	VT - Structured STS-1 SPE

2.14 PLM INH

Description: The Inhibit Payload Label Mismatch field is used to specify whether or not reports for payload label mismatches should be inhibited for this HVC.
Required field.

Software Release: 5E16(2) and later
Default: Y
Valid Entries: Y, N

2.15 TIM INH

Description: The Inhibit Trace Identifier Mismatch field is used to specify whether or not reports for trace identifier mismatches should be inhibited for this HVC.
Required field.

Software Release: 5E16(2) and later
Default: Y
Valid Entries: Y, N

PATH TRACE (J1)

2.16 SIZE

Description: This field is used to specify the maximum length of the TRANSMIT and EXPECTED values. This is a no change field.

Software Release: 5E16(2) and later
Default: 64

2.17 TRANSMIT

Description: This field is used to specify the J1 transmitted path trace value.
Valid Entries: Blank, or 1 - 62 alphanumeric characters

Copyright © 2006 Lucent Technologies

2.18 EXPECTED

Description: This field is used to specify the J1 expected path trace value.

Software Release: 5E16(2) and later
Valid Entries: Blank, or 1 - 62 alphanumeric characters

```
eqhvc                              5ESS Switch
                            OFFICE DATA ADMINISTRATION
(5763)                     HIGH-LEVEL VIRTUAL CONTAINER

*1. OIU SM          ___          8. PM GROUP     ________
*2. OIU             _            9. CGA GROUP    ________
*3. PROTECTION GRP  _           10. CLFI         ___________________________
    STE             1          #11. PAYLOAD TYPE _______
*5. HVC             _          #12. SLBL         ______
#6. HVC TYPE        _______     13. PLM INH      Y
#7. HVC EQSTAT      _           14. TIM INH      Y
                                PATH TRACE (J1)
     SIZE     64
 16. TRANSMIT ____________________________________________________________________
 17. EXPECTED ____________________________________________________________________
```

Figure 1 SAMPLE EQHVC FORM 5E16(2) AND LATER SOFTWARE RELEASES

Copyright © 2006 Lucent Technologies

SEC. 89: 5764 Record
LOW LEVEL VIRTUAL CONTAINER FORM - EQLVC

1. GENERAL

The 5764 Record is available with 5E16(2) and later Software Releases. It is used to insert, review, update, and delete LVCs (Low Level Virtual Containers) and their associated container information. This form supports the OIU (Optical Interface Unit) OC-3 (Optical Carrier Level 3) NAR (North American Region) feature (99-5E-7140). For more information on this feature, see Division 2, Section 7BQ.

1.1 Recent Change View

The Recent Change View for this form is 20.31.

2. FORM AND RECORD ENTRIES

2.1 BASE AND CONTROL, ESS UNIT

Enter the Base and Control Number and the Office Name on each record.

2.2 * OIU SM

Description: The OIU SM (Optical Interface Unit) (Switching Module) field is used to indicate to which SM the OIU is assigned.

Required Field.

Software Release: 5E16(2) and later
Valid Entries: 1 - 192

Data Rules:

OIU SM, OIU, PROTECTION GRP, STE, and HVC must be defined on the EQHVC form (5763 Record).

2.3 * OIU

Description: This field is used to indicate the OIU unit number

Software Release: 5E16(2) and later
Valid Entries: 0 - 7

2.4 * PROTECTION GRP

Description: This field is used to define the APS (Automatic Protection Switching) group number.

Software Release: 5E16(2) and later
Valid Entries: 0 - 9

2.5 STE

Description: This field is used to indicate SONET Terminating Equipment. This is a no change field.

Software Release: 5E16(2) and later

Copyright © 2006 Lucent Technologies

Default: 1

2.6 * HVC

Description: This field is used to indicate an HVC (High Level Virtual Container).

Software Release: 5E16(2) and later
Valid Entries: 1- 3

2.7 * VT GROUP

Description: This field is used to specify a Virtual Tributary Group.

Software Release: 5E16(2) and later
Valid Entries: 1- 7

2.8 * VT MEMBER

Description: This field is used to specify a Virtual Tributary Member.

Software Release: 5E16(2) and later
Valid Entries: 1- 4

2.9 LVC TYPE

Description: This field is used to specify the type of LVC (Low-level Virtual Container). This is a no change field

Software Release: 5E16(2) and later
Default: VT15

VIRTUAL CONTAINER (VC)

2.10 # EQSTAT

Description: This field is used to set the equipment status of this LVC.
Required field.

Software Release: 5E16(2) and later
Valid Entries:

Valid LVC Equipment Status Entries

Entry	Definition
G	Growth.
O	Operational.
U	Unequipped.

2.11 PM GROUP

Description: This field is used to assign a performance monitoring group to this LVC.

Software Release: 5E16(2) and later
Valid Entries: Blank, or 1 - 8 alphanumeric characters

Copyright © 2006 Lucent Technologies

Data Rules:

PM GROUP must be defined as PM GROUP on the OIUPM form (5767 Record) where CKT TYPE equals "VT15".

2.12 CGA GROUP

Description: This field is used to assign a Carrier Group Alarm group to the LVC.

Software Release: 5E16(2) and later
Valid Entries: Blank, or 1 - 8 alphanumeric characters

Data Rules:

CGA GROUP must be defined as CGA GROUP on the CGATIME form (5766 Record) with SONET TYPE set to "Y".

2.13 SLBL

Description: The Signal Label field is used to specify the signaling label for this facility.
Required field.

Software Release: 5E16(2) and later
Default: ASYNC
Valid Entries:

Valid SLBL Entries

Entry	Definition
ASYNC	Asynchronous
BYSYN	Byte Synchronous
EQLV	Equipped - non-specific

2.14 PLM INH

Description: The Inhibit Payload Label Mismatch is used to specify whether or not reports for payload label mismatches should be inhibited for this LVC.
Required field.

Software Release: 5E16(2) and later
Default: Y
Valid Entries: Y, N

2.15 PAYLOAD TYPE

Description: This field is used to designate what type of payload the LVC carries. This is a no change field.

Software Release: 5E16(2) and later
Default: DS1

WIRELESS TRUNKS

This field supports the AUTOPLEX (Lucent Registered Trademark for its Cellular Switching Systems) Wireless on OIU (Optical Interface Unit) feature. For more information see, Division 2, Section 7CC.

Copyright © 2006 Lucent Technologies

2.16 AFAC ID

Description: The AFAC ID (Autoplex Facility Identifier) field is used to communicate maintenance information to the ECP (Executive Cellular Processor) complex of an OIU. This identifier must be unique for each AUTOPLEX OIU.

Software Release: 5E17(1) FR 2 and later
Valid Entries: 1 - 4500 or blank

Data Rules:

When AFAC ID is entered, APPLICATION TYPE must be "TRUNK" and PAYLOAD TYPE must be "DS1".

AFAC IDs must be unique across EQDUP, EQVT, and EQLVC forms in an office.

APT TESTING

This field supports the APT (Automatic Progression Testing) Enhancements feature. For information on this feature see, Division 2, Section 2AD.

2.17 ALGORITHM

Description: This field is used for the DS1 (Digital Signal Level 1) in APT (Automatic Progression Testing).

Software Release: 5E16 FR 2 and later
Valid Entries:

Valid ALGORITHM Entries

Entry	Definition
1ONLY	Test One Only (test one trunk only on the DS1, independently whether test passes or fails and then move to a trunk on another DS1).
FULL	Full (test all trunks on the DS1, independently whether test passes or fails, and then move to a trunk on another DS1).
NOTST	No Test (APT should not perform any tests on the DS1).
SUCC	Stop on Success (test one trunk on the DS1 and then move to a trunk on another DS1 if test passes, or test next trunk on the same DS1 if test fails).

Data Rules:

ALGORITHM can only be entered when APPLICATION TYPE is "TRUNK".

CONTAINER (C)

2.18 # EQSTAT

Description: This field is used to set the equipment status of this CNTR (Container).
Required field.

Software Release: 5E16(2) and later
Valid Entries:

Valid CNTR Equipment Status Entries

Entry	Definition
G	Growth.
O	Operational.
U	Unequipped.

Copyright © 2006 Lucent Technologies

Data Rules:

When CONTAINER EQSTAT is "G", VIRTUAL CONTAINER EQSTAT must be "G" or "O".

When CONTAINER EQSTAT is "O", VIRTUAL CONTAINER EQSTAT must be "O".

2.19 PM GROUP

Description: This field is used to assign a performance monitoring group to this Container.

Software Release: 5E16(2) and later
Valid Entries: Blank, or 1 - 9 alphanumeric characters

Data Rules:

PM GROUP must be defined as PM GROUP on the OIUPM form (5767 Record) where CKT TYPE equals "DS1".

2.20 CGA GROUP

Description: This field is used to assign a Carrier Group Alarm group to the Container.

Software Release: 5E16(2) and later
Valid Entries: Blank, or 1 - 9 alphanumeric characters

Data Rules:

CGA GROUP must be defined as CGA GROUP on the CGATIME form (5766 Record) with SONET TYPE set to "N".

2.21 MODE

Description: This field defines the signaling mode of the Virtual Container. This is a no change field.

Software Release: 5E16(2) and later
Default: RB

2.22 CLFI

Description: This field is used to assign a descriptive name to the container associated with this Virtual Container.

Software Release: 5E16(2) and later
Valid Entries: Blank, or 1 - 25 alphanumeric characters

2.23 APPLICATION TYPE

Description: This field is used to designate what application this container will be used for. This is a no change field.

Software Release: 5E16(2) and later
Default: TRUNK

DS1 SIGNALING

Copyright © 2006 Lucent Technologies

2.24 # FRAME

Description: This field is used to specify the data signaling format for this container facility.
Required field.

Software Release: 5E16(2) and later
Valid Entries:

Valid FRAME Entries	
Entry	**Definition**
ESF	Extended Super Frame format
SF	Super Frame format

2.25 ZCS

Description: This field is used to specify whether or not the digital signal level 1 SONET (Synchronous Optical Network) facility signaling zero code suppression is on.
Required field.

Software Release: 5E16(2) and later
Default: N
Valid Entries: Y, N

```
eqlvc                            5ESS Switch
SCREEN 1 OF 2             OFFICE DATA ADMINISTRATION
(5764)                    LOW-LEVEL VIRTUAL CONTAINER

*1. OIU SM         ___          VIRTUAL CONTAINER (VC)         APT TESTING
*2. OIU            _          #9. EQSTAT       _           15. ALGORITHM _____
*3. PROTECTION GRP _          10. PM GROUP     ________
    STE            1          11. CGA GROUP    ________
*5. HVC            _          12. SLBL         ASYNC
*6. VT GROUP       _          13. PLM INH      Y
*7. VT MEMBER      _              PAYLOAD TYPE DS1
    LVC TYPE       VT15
```

```
eqlvc                            5ESS Switch
SCREEN 2 OF 2             OFFICE DATA ADMINISTRATION
(5764)                    LOW-LEVEL VIRTUAL CONTAINER

     CONTAINER (C)
#16. EQSTAT    _
 17. PM GROUP  ________
 18. CGA GROUP ________
     MODE      RB
```

```
 20. CLFI              _________________________
     APPLICATION TYPE TRUNK

 DS1 SIGNALING
#22. FRAME ___
 23. ZCS   N
```

Figure 1 SAMPLE EQLVC FORM 5E16(2) SOFTWARE RELEASE

```
eqlvc                              5ESS Switch
SCREEN 1 OF 2              OFFICE DATA ADMINISTRATION
(5764)                     LOW-LEVEL VIRTUAL CONTAINER

*1. OIU SM         ___          VIRTUAL CONTAINER (VC)
*2. OIU            _          #9. EQSTAT       _
*3. PROTECTION GRP _          10. PM GROUP     ________
*4. STE            1          11. CGA GROUP    ________
*5. HVC            _          12. SLBL         ASYNC
*6. VT GROUP       _          13. PLM INH      Y
*7. VT MEMBER      _              PAYLOAD TYPE DS1
    LVC TYPE       VT15
```

```
eqlvc                              5ESS Switch
SCREEN 2 OF 2              OFFICE DATA ADMINISTRATION
(5764)                     LOW-LEVEL VIRTUAL CONTAINER

     CONTAINER (C)                                  WIRELESS TRUNKS
#15. EQSTAT    _                                   23. AFAC ID ____
 16. PM GROUP  ________                                APT TESTING
 17. CGA GROUP ________                            24. ALGORITHM _____
     MODE      RB

 19. CLFI              _________________________
     APPLICATION TYPE TRUNK

 DS1 SIGNALING
#21. FRAME ___
 22. ZCS   N
```

Figure 2 SAMPLE EQLVC FORM 5E17(1) AND LATER SOFTWARE RELEASES

Copyright © 2006 Lucent Technologies

SEC. 90: 5765 Record
ANY MEDIA INTERFACE PLATFORM FORM - EQAIP

1. GENERAL

The 5765 Record is available with 5E16(2) and later Software Releases. It is used to define assignments and locations for Any Media Interface Platform Units. This form supports the following features:

OIU (Optical Interface Unit) OC-3 (Optical Carrier Level 3) NAR (North American Region) feature (99-5E-7140). For more information, see Division 2, Section 7BQ.

OIU - IP (Optical Interface Unit - Internet Protocol) feature (99-5E-8308). This feature is made available in 5E16 Feature Release 3. (For more information on this feature, see Division 2, Section 7BX.)

1.1 Recent Change View

The Recent Change View for this form is 19.27.

2. FORM AND RECORD ENTRIES

2.1 BASE AND CONTROL, ESS UNIT

Enter the Base and Control Number and the Office Name on each record.

2.2 * AIP SM

Description: The AIP SM (Access Interface Platform Switching Module field is used to specify the SM number where the AIP is located.

Required Field.
Valid Entries: 1 - 192

Data Rules:

AIP SM must be defined as an SM with SM-2000 class processor on the EQIM form.

2.3 * AIP

Description: This field is used to indicate the AIP unit number.
Valid Entries: 0 - 15

2.4 # EQL AISLE

Description: The Equipment Location Aisle field is used to assign the equipment location (floor and aisle) number. This entry consists of a floor and aisle number. The first and second digits, from the left, are the floor number. Valid floor numbers are 00 - 99. The third and fourth digits, from the left, are the aisle number. Valid aisle numbers are 00 - 99.
Required field.
Valid Entries:

00 - 99 for floor number
00 - 99 for aisle number

Copyright © 2006 Lucent Technologies

2.5 # EQL BAY

Description: This field is used to assign the Equipment Location Bay number.

Required field.
Valid Entries:

Valid EQLBAY Entries, 5E9(2) and later	
Entry	**Definition**
0 - 14	SM-2000; SM Cabinet aisle.
90 - 99	SM-2000;SM Cabinet aisle.
100 - 104	SM-2000; Back panel; wiring position.
200 - 208	SM-2000; Front panel; door position.

2.6 # EQL VERPOS

Description: This field is used to assign the height of the AIP unit within the bay, in inches above the floor.

Required Field.
Valid Entries: 15, 32, or 49

2.7 # CABINET

Description: This field is used to assign the cabinet reference where the AIP is located.

Required Field.
Valid Entries: FRONT or REAR

```
eqaip                              5ESS Switch
                            OFFICE DATA ADMINISTRATION
(5765)                     ANY MEDIA INTERFACE PLATFORM

*1. AIP SM     ___
*2. AIP        __
#3. EQL AISLE  ____
#4. EQL BAY    ___
#5. EQL VERPOS __
#6. CABINET    _____
```

Figure 1 SAMPLE EQAIP FORM 5E16(2) AND LATER SOFTWARE RELEASES

Copyright © 2006 Lucent Technologies

SEC. 91: 5829 RECORD
GENERAL GSM/NGSM CONNECTIVITY - QGCON

1. GENERAL

Available for 5E16(2) FR3 and later, this form supports the SIP (Session Initiation Protocol) for Packet Trunking feature (99-5E-8382). For more information, see Division 2, Section 4A684. This form provides the basic description of the Switching Module side of the GQPH (Generalized QLPS Protocol Handler) pipe connecting to the GQPH network.

1.1 Recent Change View

The Recent Change View for this form is 17.27.

2. FORM AND RECORD ENTRIES

2.1 BASE AND CONTROL, ESS UNIT

Enter the Base and Control Number and the Office Name on each record.

2.2 # GSM

Description: This field specifies the GSM (Global Switching Module) where data is read.

Software Release: 5E16(2) FR3 and later
Required field.
Valid Entries: 1 - 192

Data Rules:

The GSM entered on this form must be defined on at least 2 sets of QPHPIPE forms (5828 Record) for both QLPS NETWORK 0 and QLPS NETWORK 1. The GLOBAL SM, PSU SHELF, and CHANNEL GROUP must be the same within each set of the QPHPIPE forms and SERVICE TYPE must be "SIPT".

2.3 * SERVICE TYPE

Description: This field is used to indicate whether or not the service type is SIPT.

Required Field.
Default: SIPT
Valid Entries: SIPT

NON-GSM LIST

This list represents the non-GSMs.

2.4 SM2000

Description: This field is used to display non-GSMs.
Valid Entries: 1 - 192

Data Rules:

Copyright © 2006 Lucent Technologies

SMs in NON GSM list must be unique.

GSM must also be listed in a NON GSM list.

MHs in the NON-GSM list must be SM2000s that have MH Pipes provisioned on the EQPIPE form (5544 Record).

```
qgcon                              5ESS Switch            _
                            OFFICE DATA ADMINISTRATION
                           GENERAL GSM/NGSM CONNECTIVITY

*1. GSM          ___                     3. NON-GSM LIST
*2. SERVICE TYPE SIPT     ROW SM2000 ROW SM2000 ROW SM2000 ROW SM2000
                           1   ___     9  ___    17  ___    25  ___
                           2   ___    10  ___    18  ___    26  ___
                           3   ___    11  ___    19  ___    27  ___
                           4   ___    12  ___    20  ___    28  ___
                           5   ___    13  ___    21  ___    29  ___
                           6   ___    14  ___    22  ___    30  ___
                           7   ___    15  ___    23  ___    31  ___
                           8   ___    16  ___    24  ___    32  ___
```

Figure 1 SAMPLE QGCON FORM 5E16(2) AND LATER SOFTWARE RELEASES

Copyright © 2006 Lucent Technologies

SEC. 92: QLPS TIMESLOT USAGE - QTUV

1. GENERAL

Available for 5E16(2) FR3 and later, this form supports the QLPS (Quad-Link Packet Switch) feature. This form is used to preserve timeslot assignment on a QTMSLINK to a QLPS board in an SM-2000 office.

1.1 Recent Change View

There is no Recent Change View for this form.

2. FORM AND RECORD ENTRIES

2.1 BASE AND CONTROL, ESS UNIT

Enter the Base and Control Number and the Office Name on each record.

2.2 # QLPS NETWORK

Description: This field specifies the Quad-link Packet Switch Network number.
Required field.

Software Release: 5E16(2) FR3 and later
Valid Entries: 0 or 1

2.3 * QTMSLINK

Description: This field represents one of four TMS (Time Multiplex Slot) link numbers.

Required Field.

Software Release: 5E16(2) FR 3 and later
Valid Entries:

4 - 28 or 34 - 186 in increments of 4 for single fabric and 6 - 374 for network 0 or,
7 - 375 for network 1 in increments of 8 for dual fabric.

2.4 * TIMESLOT

Description: This field represents the time slot number being used.

Required Field.

Software Release: 5E16(2) FR 3 and later
Valid Entries: 0 - 255

2.5 HDLC

Description: This field represents the High Level Data Link Control Channel number.

Software Release: 5E16(2) FR 3 and later
Valid Entries: 1 - 30

Copyright © 2006 Lucent Technologies

2.6 QEND PT

Description: This field represents the endpoint number for QPH/GQPH pipes (same as SM-2000 value for MH pipes).

Software Release: 5E16(2) FR 3 and later
Valid Entries:

1 - 192 for SM-2000 or for MH pipes or,
197 - 255 for endpoint number for QPH/GQPH pipes

2.7 TYPE

Description: This field represents the QLPS pipe type.

Software Release: 5E16(2) FR 3 and later
Valid Entries: CCS, MH, or SIPT

Data Rules:

When TYPE is "MH", QENDPT must be 1 - 192.

When TYPE is "CCS" or "SIPT" QENDPT must be 197 - 255.

```
qtuv                                5ESS Switch            _
                            OFFICE DATA ADMINISTRATION
(retrofit)                      QLPS TIMESLOT USAGE

*1. QLPS NETWORK _
*2. QTMSLINK     ___
*3. TIMESLOT     ___
 4. HDLC         __
 5. QEND PT      ___
 6. TYPE         _______
```

Figure 1 SAMPLE QTUV FORM 5E16(2) AND LATER SOFTWARE RELEASES

Copyright © 2006 Lucent Technologies

SEC. 93: 5747 RECORD
AIU TEST HEAD- TSTHD

1. GENERAL

Available for 5E16(2) FR6 and later, this form is used to define AIU test heads for the AIU Global pack type. It supports the IRAP (AIU Integrated Loop Testing POTS Cards) feature, see Divison 2, Section 7CJ.

1.1 Recent Change View

There is no Recent Change View for this form.

2. FORM AND RECORD ENTRIES

2.1 BASE AND CONTROL, ESS UNIT

Enter the Base and Control Number and the Office Name on each record.

2.2 * SM

Description: This field indicates the switching module to which the AIU test head is connected.

Required Field.
Valid Entries: 1 - 192

Data Rules:

When the TSTHD form is entered, then SM, AIU, PACK NUM combination must match SM, AIU, APPL PACK NUM combination on the EQAIUP form (5746 Record) with TYPE of "AIGLP".

2.3 * AIU

Description: Enter the Access Interface Unit identification number.

Required Field.

Valid AIU Entries - 5E12 and later	
Entry	**Description**
0 - 14	SM.
0 - 104	SM-2000.

2.4 * APPL PACK NUM

Description: This field specifies the AIU application pack number.

Required Field.
Valid Entries: 0 - 19

Data Rules:

2.5 TEST HEAD A

Description: This field is used to specify whether or not line circuit 31 equipment AIU primary test head is

Copyright © 2006 Lucent Technologies

connected. This is a no_change field.

Software Release: 5E16(2) FR6 and later
Default: Y
Valid Entries: Y, N

2.6 TEST HEAD B

Description: This field is used to specify whether or not line circuit 15 equipment AIU primary test head is connected.

Software Release: 5E16(2) FR6 and later
Default: N
Valid Entries:

Valid TEST HEAD B Entries - 5E16 and later

Entry	Description
y	Test Head B IS ASSIGNED and connected to a line circuit.
N	Test Head B is assigned and not connected to a line circuit.

```
tsthd                              5ESS Switch            _
                            OFFICE DATA ADMINISTRATION
(5747)                             AIU TEST HEAD

*1. SM            ___
*2. AIU           ___
#3. APPL PACK NUM __
    TEST HEAD A   Y
 5. TEST HEAD B   N
```

Figure 1 SAMPLE TSTHD FORM 5E16(2) AND LATER SOFTWARE RELEASES

Copyright © 2006 Lucent Technologies

SEC. 94: 5725 RECORD
NETWORK CLOCK 2 REFERENCE FORM - NCLKREF

1. GENERAL

The 5725 Record is available with 5E2 and later Software Releases and is used to define the exterior references for the NCLK2 (Network Clock Model 2). This form is required for 24-channel exterior references for NCLK2 (clock type of "24CHAN2"on the EQCORE input form).

1.1 Recent Change View

The corresponding Recent Change view for this form is 17.16.

2. FORM AND RECORD ENTRIES

2.1 BASE AND CONTROL, ESS UNIT

Enter the Base and Control Number and office name on each record.

2.2 * REFERENCE

Description: Enter the external reference number.

NOTE: REFERENCE number in a CM2 (Communication Module Model 2) office can not be reused. Each value must be unique. Also, at most, 8 of these forms can be entered for CM3 (Communication Module Model 3).

Required Field.
Valid Entries: 1 - 8

Data Rules:

If a 24-channel NCLK2 is used (CLOCK TYPE of "24CHAN2" on the EQCORE input form), then only reference values 1 - 4 can be used with the following restrictions:

For 5E14 and earlier:

- A REFERENCE TYPE of "ANALOG" can be used for references 1 and 3.
- A REFERENCE TYPE of "24CHAN" can be used on any reference 1 - 4.

For 5E15 and later:

The EQCORE form (5701 Record) must be inserted before this form can be inserted/updated.

When this form exists with a REFERENCE value of 1 or 0, and a REFERENCE TYPE of "ANALOG", and CLOCK TYPE on the EQCORE form is "NCLK3", then this same REFERENCE value with REFERENCE TYPE of "ANALOG10" must not exist. Either one or the other of these NCLKREF forms with the same REFERENCE value can exist, but not both.

2.3 *REFERENCE TYPE

Copyright © 2006 Lucent Technologies

Description: Enter the reference type used.

Valid REFERENCE TYPE Entries	
Entry	**Definition**
30CHAN	30-channel reference
64K	64 Kilobytes reference
24CHAN	24-channel reference
ANALOG	Analog reference (2.048mHz)
ANALOG10	Analog reference (10mHz)

Data Rules:

For 5E15 and later:

When REFERENCE TYPE is "ANALOG" or "ANALOG10" , REFERENCE FORMAT must not be entered.

When REFERENCE TYPE is "24CHAN", the REFERENCE FORMAT must be "D4B8", "DAWOZ", "D4WZC", "FEB8", "FEWOZ", or "FEWZC".

When REFERENCE TYPE is "64K", REFERENCE FORMAT must be "AMI64K".

When REFERENCE TYPE is "30CHAN", REFERENCE FORMAT must be "AMI" or "HDB3".

When REFERENCE TYPE is "ANALOG", "ANALOG10", or "64K" and CLOCK TYPE is "NCLK3", then REFERENCE must be 1 or 2.

2.4 #CLOCK TYPE

Description: This field is used to indicate the type of Network Clock being used.
Valid Entries:

Valid CLOCK TYPE Entries	
Entry	**Definition**
24CHAN2	24-channel DS1 format T1 trunk
NCLK3	NCLK3 NetworkClock
SANC3	NCLK3 Stand-alone
STDALNE2	NCLK2 Stand-alone

Data Rules:

For 5E15 and later:

When an office is equipped with CM3, CLOCK TYPE must be "NCLK3" or "SANC3".

When an office is equipped with CM2, CLOCK TYPE must be "24CHAN2" or "STDALNE2".

When CLOCK TYPE is "24CHAN2", REFERENCE TYPE must be "ANALOG" or "24CHAN".

When CLOCK TYPE is "24CHAN2", and REFERENCE TYPE is "24CHAN", REFERENCE can only be 1 through 3.

When CLOCK TYPE is "24CHAN2", only REFERENCE 1 can have a REFERENCE TYPE of "24CHAN".

When CLOCK TYPE is "STDALNE2", REFERENCE TYPE must be "ANALOG" or "24CHAN".

When CLOCK TYPE is "STDALNE2", EQUIPMENT STATUS must not be "O".

When CLOCK TYPE is "NCLK3", only REFERENCE 1 or 2 can have a REFERENCE TYPE of "ANALOG",

Copyright © 2006 Lucent Technologies

"ANALOG10", or "64K".

When CLOCK TYPE is "SANC3", EQUIPMENT STATUS must not be "O".

2.5 #PRIORITY

Description: Enter the priority of the external reference. The primary reference has a value of 1, the second priority reference has a value of 2, and so forth until all references have been assigned.
Valid Entries: 1 - 8

2.6 EQUIPMENT STATUS

Description: Enter the equipment status. For new offices and units destined for factory testing, operational is the only allowed value. During off-line ODA database retrofits, the other values are valid.

Valid EQUIPMENT STATUS Entries

Entry	Definition
O	Operational
G	Growth
U	Unequipped

Data Rules:

For 5E15 and later:.

When EQUIPMENT STATUS is "O", INTERRUPT STATUS must be allowed.

When EQUIPMENT STATUS is "U", INTERRUPT STATUS must be inhibited.

2.7 INTERRUPT STATUS

Description: Enter the Interrupt Status.

Required Field.
Default: ALLOW
Valid Entries:

Valid INTERRUPT STATUS Entries

Entry	Definition
ALLOW	Allow interrupts
INHIBIT	Inhibit interrupts

Data Rules:

If EQUIPMENT STATUS is "O", INTERRUPT STATUS must be "ALLOW". If EQUIPMENT STATUS IS "U", INTERRUPT STATUS must be "INHIBIT".

2.8 REFERENCE FORMAT

Description: Enter the format of the reference.
Default: D4WOZ
Valid Entries:

Valid REFERENCE FORMAT Entries

Entry	Definition

Copyright © 2006 Lucent Technologies

AMI64K	64K-composite signal AMI.
D4WOZ	D4 without Zero Code Suppression
D4B8	D4 with Bipolar 8 Zeros Suppression
D4WZC	D4 with Zero Code Suppression
FEWOZ	Extended Framing Format without Zero Code Suppression
FEB8	Extended Framing Format with Bipolar 8 Zeros Suppression
FEWZC	Extended Framing Format with Zero Code Suppression
AMI	30-channel Alternate Mark Inversion
HDB3	30-channel High Density Bipolar with 3 Zeros Substitution

Data Rules:

If REFERENCE TYPE is "24CHAN", valid entries are "D4WOZ", "D4B8", "D4WZC", "FEWOZ", "FEB8", and "FEWZC".

```
nclkref                          5ESS Switch            _
                          OFFICE DATA ADMINISTRATION
(5525)                     NETWORK CLOCK 2 REFERENCE

*1. REFERENCE _

#2. PRIORITY         _
 3. EQUIPMENT STATUS O
 4. INTERRUPT STATUS ALLOW
#5. REFERENCE TYPE   _______
 6. REFERENCE FORMAT D4WOZ
```

Figure 1 SAMPLE NCLKREF FORM 5E5 - 5E14 SOFTWARE RELEASES

```
nclkref                          5ESS Switch            _
                          OFFICE DATA ADMINISTRATION
(5725)                    NETWORK CLOCK 2/3 REFERENCE

*1. REFERENCE      _
*2. REFERENCE TYPE _________
#3. CLOCK TYPE     _________

#4. PRIORITY         _
 5. EQUIPMENT STATUS O
 6. INTERRUPT STATUS ALLOW
 7. REFERENCE FORMAT _______
```

Figure 2 SAMPLE NCLKREF FORM 5E15 AND LATER SOFTWARE RELEASES

Copyright © 2006 Lucent Technologies